6 : 1 BALL DRIVES

PART No. 4511

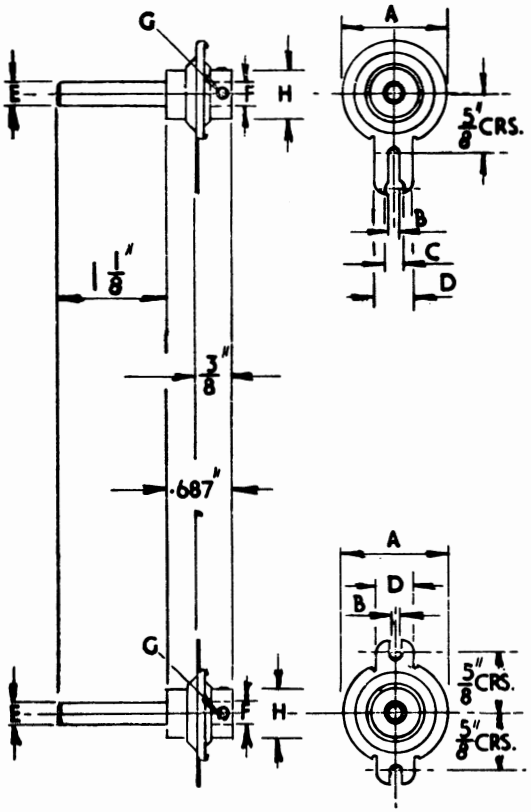

TYPE DA.
PART No. 4511/DA.

TYPE F
PART No. 4511/F.

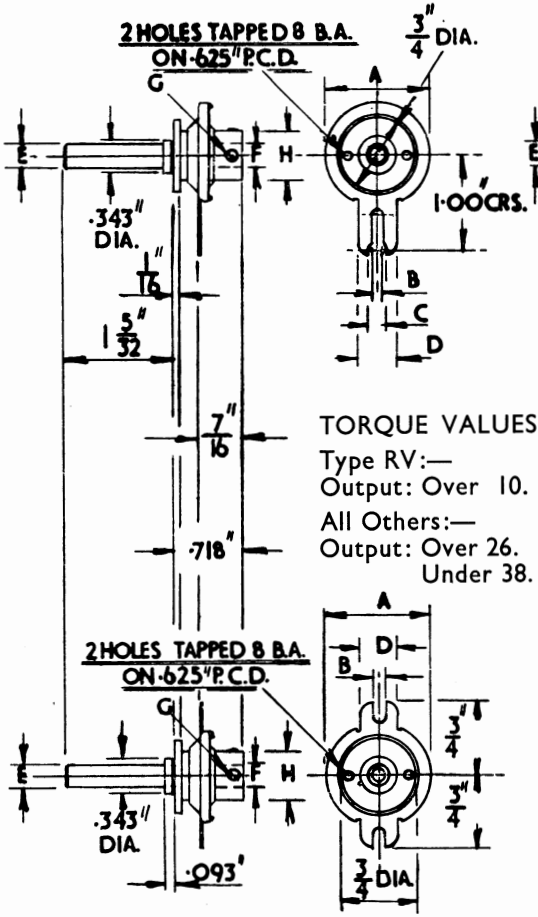

TYPE DAF.
PART No. 4511/DAF.

TYPE RV
PART No. 4511/RV.

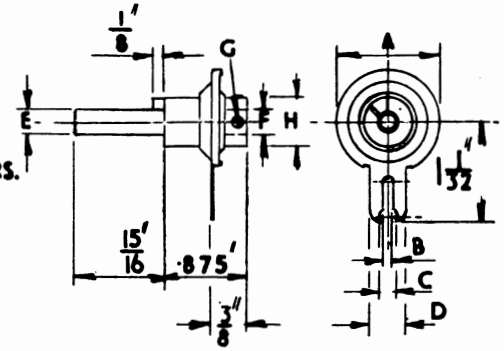

TORQUE VALUES in oz/ins:—

Type RV:—
Output: Over 10. Input Fast: Under 20. Input Slow: Under 3

All Others:—
Output: Over 26. Input: Under 3.
Under 38.

DIM.	DESCRIPTION.
A	1 3/32" DIA. MAX.
B	·125"
C	·188"
D	·375"
E	·250" DIA. +·000" −·003"
F	·250" DIA. +·002" −·000"
G	2 TAPPED HOLES FITTED 4 B.A. CUP POINTED GRUB SCREWS
H	·500" DIA.