PASSIVE COMPONENTS

# *Leaded Ceramic Capacitors*

**1998**

**Data Handbook PA06b**

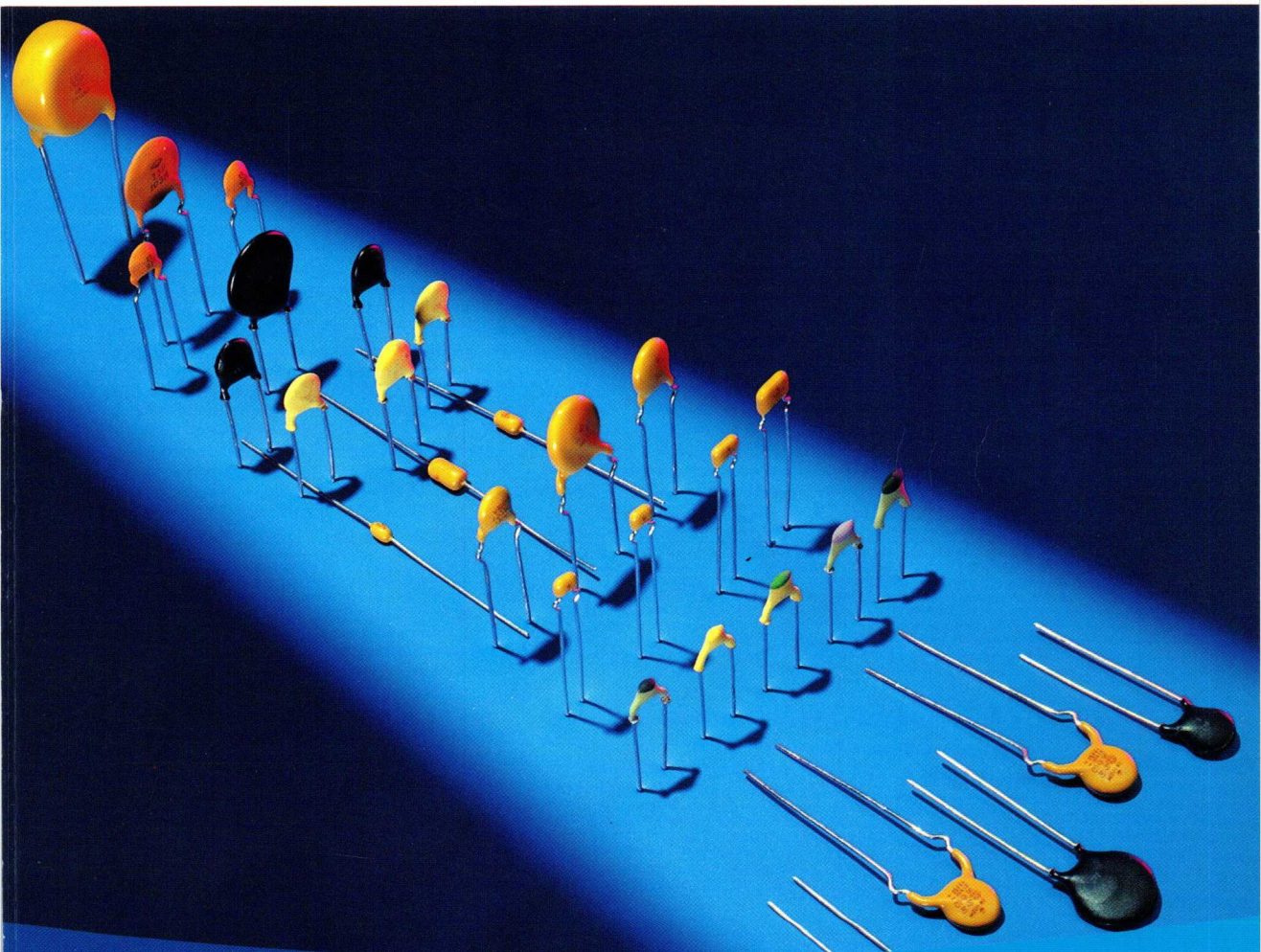

PHILIPS

*Let's make things better.*

## QUALITY ASSURED

Our quality system focuses on the continuing high quality of our components and the best possible service for our customers. We have a three-sided quality strategy: we apply a system of total quality control and assurance; we operate customer-oriented dynamic improvement programmes; and we promote a partnering relationship with our customers and suppliers.

## PRODUCT SAFETY

In striving for state-of-the-art perfection, we continuously improve components and processes with respect to environmental demands. Our components offer no hazard to the environment in normal use when operated or stored within the limits specified in the data sheet.

Some components unavoidably contain substances that, if exposed by accident or misuse, are potentially hazardous to health. Users of these components are informed of the danger by warning notices in the data sheets supporting the components. Where necessary the warning notices also indicate safety precautions to be taken and disposal instructions to be followed. Obviously users of these components, in general the set-making industry, assume responsibility towards the consumer with respect to safety matters and environmental demands.

All used or obsolete components should be disposed of according to the regulations applying at the disposal location. Depending on the location, electronic components are considered to be 'chemical', 'special' or sometimes 'industrial' waste. Disposal as domestic waste is usually not permitted.

# Leaded Ceramic Capacitors

## CONTENTS


| | Page |
|---|---|
| INTRODUCTION | |
| General data | 4 |
| Construction | 4 |
| Manufacturing of ceramic capacitors | 4 |
| Equivalent circuit for ceramic capacitors | 4 |
| Tangent of the loss angle | 5 |
| CERAMIC DISC CAPACITORS | 7 |
| LEADED CERAMIC MULTILAYER CAPACITORS | 77 |
| MINIATURE CERAMIC PLATE CAPACITORS | 143 |
| DATA HANDBOOK SYSTEM | 243 |
| STANDARD VALUES (inside back cover) | |

## DEFINITIONS

| **Data sheet status** | |
|---|---|
| Objective specification | This data sheet contains target or goal specifications for product development. |
| Preliminary specification | This data sheet contains preliminary data; supplementary data may be published later. |
| Product specification | This data sheet contains final product specifications. |
| **Application information** | |
| Where application information is given, it is advisory and does not form part of the specification. | |

## LIFE SUPPORT APPLICATIONS

These products are not designed for use in life support appliances, devices, or systems where malfunction of these products can reasonably be expected to result in personal injury. Philips customers using or selling these products for use in such applications do so at their own risk and agree to fully indemnify Philips for any damages resulting from such improper use or sale.

# INTRODUCTION

## GENERAL DATA

Ceramic capacitors are widely used in electronic circuitry for coupling, decoupling and in filters. These different functions require specific capacitor properties.

Ceramic capacitors can be divided into two classes:

- Class 1

  In these capacitors dielectric materials are used which have a very high specific resistance, very good Q and linear temperature dependence ($\varepsilon_r$ from 6 up to 550). They are used in such applications as oscillators and filters where low losses, capacitance drift compensation and high stability are required.

- Class 2

  These capacitors have higher losses and have non-linear characteristics ($\varepsilon_r > 250$). They are used for coupling and decoupling.

## CONSTRUCTION

The capacitance of a ceramic capacitor depends on the area of the electrodes (A), the thickness of the ceramic dielectric (t) and the dielectric constant of the ceramic material ($\varepsilon_r$); and on the number of dielectric layers (n) with multilayer ceramic capacitors:

$$C = \varepsilon_r \times \varepsilon_o \times \frac{A}{t} \times n$$

The rated voltage is dependent on the dielectric strength, which is mainly governed by the thickness of the dielectric layer and the ceramic structure. For this reason a reduction of the layer thickness is limited.

## MANUFACTURING OF CERAMIC CAPACITORS

The raw materials are finely milled and carefully mixed. Thereafter the powders are calcined at temperatures between 1100 and 1300 °C to achieve the required chemical composition. The resultant mass is reground and dopes and/or sintering means are added.

The finely ground material is mixed with a solvent and binding matter. Thin sheets are obtained by casting or rolling.

For plate capacitors these sheets are fired in a carefully controlled atmosphere at temperatures between 1200 and 1400 °C.

For multilayer capacitors electrode material is printed on the sheets and after stacking and pressing of the sheets cofired with the ceramic compact at temperatures between 1000 and 1400 °C.

The totally enclosed electrodes of a multilayer capacitor guarantee good life test behaviour as well.

## EQUIVALENT CIRCUIT FOR CERAMIC CAPACITORS

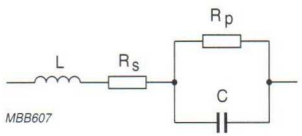


Fig.1 Equivalent circuit.

**Definition of symbols;** see Fig.1

| SYMBOL | DESCRIPTION |
|---|---|
| C | Capacitance between the two electrodes, plus the stray capacitance at the edges and between the leads. |
| $R_p$ | Resistance of insulation and dielectric. Generally $R_p$ is very high, and of decreasing importance with increasing frequency. $R_p$ also represents the polarization losses of the material in an alternating electric field. |
| $R_s$ | Losses in the leads, the electrodes and the contacts. Up to several hundreds of MHz the current penetration depth is greater than the conductor thickness so that no skin-effect occurs. For ceramic capacitors $R_s$ is extremely low. |
| L | Inductance of the leads and the internal inductance of the capacitor; the latter, however, is almost negligible. The inductance is only important in high frequency applications, since the capacitor will act as an inductance when the frequency is higher than its resonance frequency. |

### TANGENT OF THE LOSS ANGLE

The losses of a capacitor are expressed in terms of tan $\delta$ which is the relationship between the resistive and reactive parts of the impedance, specified as follows:

$$\tan\delta = \left|\frac{R}{X}\right| = \frac{R_p + R_s\{1 + (\omega CR_p)^2\}}{(\omega CR_p)^2 - \omega L\{1 + (\omega CR_p)^2\}}$$

From this formula, tan $\delta$ can be derived for different frequency ranges as shown in Fig.2.

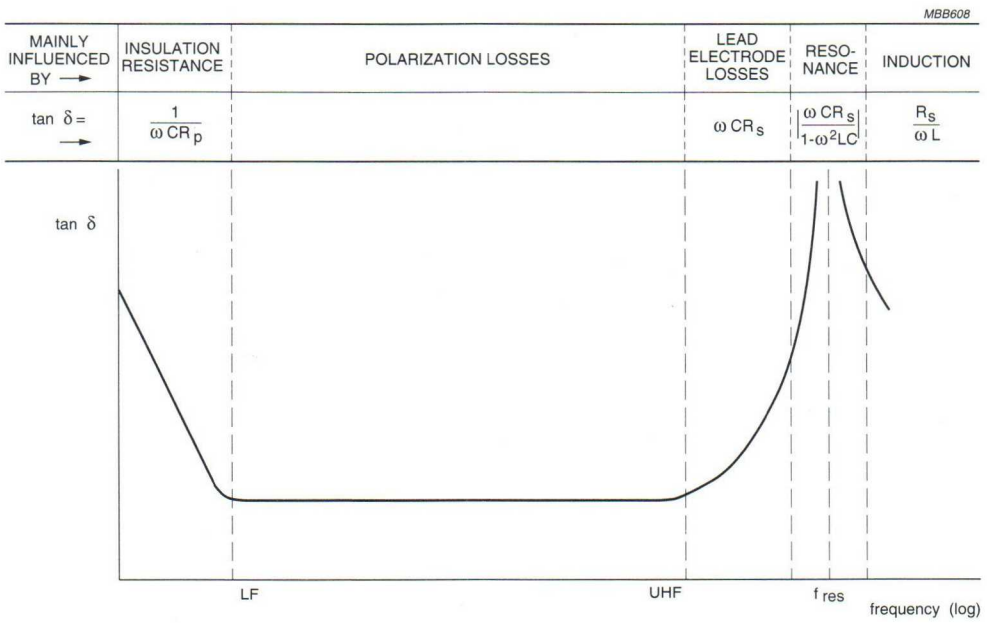


Fig.2 Tan $\delta$ as a function of frequency.

# CERAMIC DISC CAPACITORS


| | Page |
|---|---|
| CLEAR TEXT CODE | 8 |
| PACKAGING | 9 |
| PRODUCT DATA | |
| Class 1 and 2, 50 V (DC) general purpose | 12 |
| Class 1 and 2, 500 V (DC) general purpose | 20 |
| Class 1 and 2, 1/2/3/6 kV general purpose | 28 |
| Class 2, low loss (0.5% max.) 1 kV, 2 kV and 3 kV | 46 |
| Class 2, low loss (0.2% max.) 1 kV and 2 kV (flanged) | 55 |
| Class X1/Y2, 250 V (AC) safety (kinked or straight) | 63 |
| Class Y2, 250 V (AC) safety (flanged) | 70 |

# Ceramic disc capacitors — Clear text code

## CLEAR TEXT ORDERING CODE

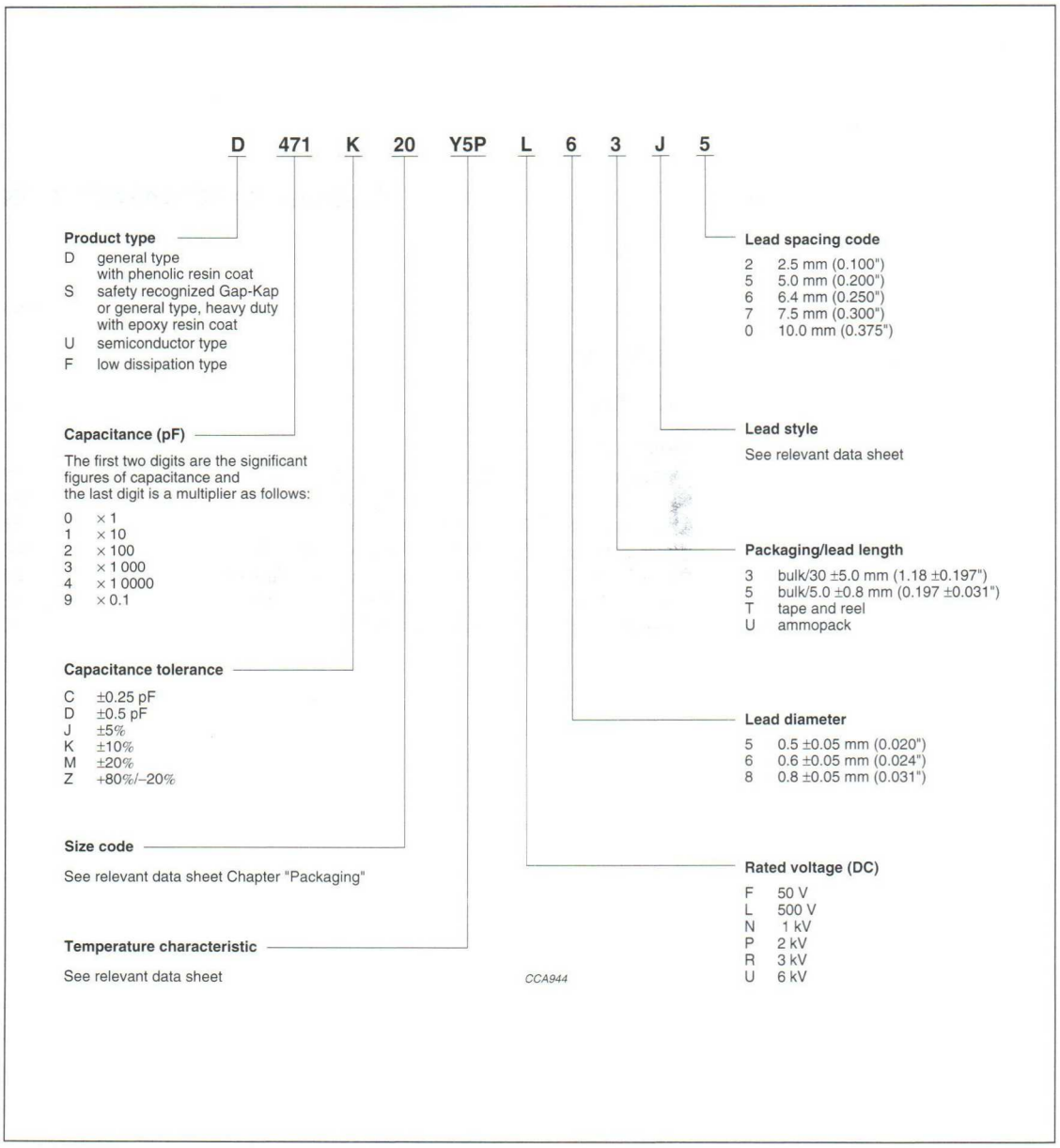

## SMALLEST PACKAGING QUANTITIES (SPQ)

| PACKAGING | PRODUCT TYPE AND SIZE CODE | | SPQ | | BOX DIMENSIONS L × W × H (mm) |
|---|---|---|---|---|---|
| | | | 2252 SERIES FE 15-digit | 2222 SERIES US 15-digit | |
| Bulk; note 1 | disc; long lead; L > 25.4 mm | 20 to 25 | 1000 | | 245 × 120 × 65 |
| | | 29 to 39 | 1000 | | |
| | | 43 to 47 | 1000 | | |
| | | 53 to 84 | 500 | | |
| | | 96 | 250 | | |
| | disc; short lead; L ≤ 10 mm | 20 to 25 | 5000 | | 245 × 120 × 65 |
| | | 29 to 39 | 3000 | | |
| | | 43 to 47 | 3000 | | |
| | | 53 to 59 | 2000 | | |
| | | 66 to 69 | 1000 | | |
| | | 75 to 84 | 500 | | |
| | | 96 | 500 | | |
| Tape on reel | disc | 20 to 43; <500 $V_{DC}$ | 2500 | 2000[2] | 370 × 370 × 60 |
| | | 20 to 43; 500 $V_{DC}$ ≤ WV ≤ 2 $kV_{DC}$ | 2000 | 2000 | |
| Ammopack | disc | 20 to 43; <500 $V_{DC}$ | 2000 | 2000 | 335 × 240 × 50 |
| | | 20 to 43; 500 $V_{DC}$ ≤ WV ≤ 2 $kV_{DC}$ | 2000 | 2000 | 335 × 290 × 50 |
| | | 2 $kV_{DC}$ only | 1500 | 1500 | |

**Notes**

1. SPQ contains 1 or a multiple of poly-bags, 1000 units per bag, except for the following:
   a) Disc size 53 to 84, long lead and size 66 to 84, short lead: 500 units per bag.
   b) Disc size 96: 250 units per bag.
2. Non-standard SPQ for 2222 series and US 15-digit code (including FE 15-digit code with suffix XV) which will be phased out in the future.

# PRODUCT DATA

# Ceramic disc capacitors

# Class 1 and 2, 50 V (DC) general purpose

## FEATURES

- Low losses
- High stability
- High capacitance in small size
- Kinked (preferred) or straight leads.

## APPLICATIONS

- Bypassing
- Coupling
- Resonant circuit.

## DESCRIPTION

The capacitors consist of a ceramic disc both sides of which are silver-plated. Connection leads are made of tinned copper having a diameter of 0.6 mm.

The capacitors have inward kinked leads with a spacing of 5 mm (0.200") and a lead length from 4 to 30 mm. Encapsulation is made of phenolic resin.

## QUICK REFERENCE DATA

| DESCRIPTION | VALUE |
|---|---|
| Capacitance range: | |
| Class 1 | 1.0 to 220 pF |
| Class 2 | 330 to 47000 pF |
| Rated DC voltage | 50 V |
| Dielectric strength | 250% of rated voltage |
| Insulation resistance at 50 V (DC) | ≥10000 MΩ |
| Tolerance on capacitance | ±5%, ±10%, ±20%, −20%/+80% |
| Dissipation factor: | |
| Class 1, $C \leq 30$ pF | $\leq 20 \times (10/C + 0.7) \times 10^{-4}$ max. |
| Class 1, $C > 30$ pF | $\leq 20 \times 10^{-4}$ |
| Class 2 | ≤3.0% |
| Temperature coefficients | NP0, SL0, Y5P, Z5U, Z5V |
| Sectional specifications | IEC 384-8, IEC 384-9, EIA198 |
| Climatic category: | |
| Class 1 | 55/85/21 |
| Class 2 | 10/85/21 |

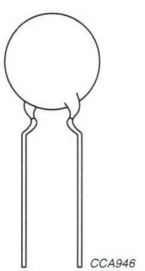


Fig.1 Simplified outline.

## MECHANICAL DATA

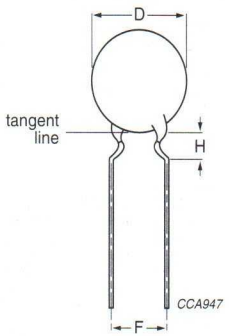


Dimensions in mm.
For dimensions see Tables 1 and 2.

Fig.2 Capacitors with 5 mm (0.20") lead spacing.

## MARKING

Marking indicates capacitance value and tolerance in accordance with *"EIA198"*.

## ORDERING INFORMATION (preferred types)

**Table 1 Class 1, 50 V (DC), kinked**; capacitance, mechanical dimensions and ordering information; note 1

| C (pF) | TOL. (%) | $D_{max}$ (mm) | LEAD SPACING F (mm) | SH[2] (mm) | CLEAR TEXT CODE | PACKAGING CODE 8th AND 9th DIGIT[3] | | | CATALOGUE NUMBER[4] |
|---|---|---|---|---|---|---|---|---|---|
| | | | | | 13th DIGIT: T = REEL; U = AMMO; 3 = BULK | REEL | AMMO | BULK | |
| **Class 1 NP0** | | | | | | | | | |
| 1.0 | ±25 pF | 5.0 | 5.0 | 3.2 | D109C20C0KF6.J5 | 06 | 08 | 10 | 2252 505 ..044 |
| 1.5 | ±25 pF | 5.0 | 5.0 | 3.2 | D159C20C0KF6.J5 | 06 | 08 | 10 | 2252 505 ..144 |
| 2.2 | ±25 pF | 5.0 | 5.0 | 3.2 | D229C20C0JF6.J5 | 06 | 08 | 10 | 2252 505 ..244 |
| 3.3 | ±25 pF | 5.0 | 5.0 | 3.2 | D339C20C0JF6.J5 | 06 | 08 | 10 | 2252 505 ..344 |
| 4.7 | ±25 pF | 5.0 | 5.0 | 3.2 | D479C20C0HF6.J5 | 06 | 08 | 10 | 2252 505 ..444 |
| 6.8 | ±50 pF | 5.0 | 5.0 | 3.2 | D689D20C0HF6.J5 | 06 | 08 | 10 | 2252 505 ..645 |
| 10 | ±5 | 5.0 | 5.0 | 3.2 | D100J20C0GF6.J5 | 06 | 08 | 10 | 2252 505 ..005 |
| 12 | ±5 | 5.0 | 5.0 | 3.2 | D120J20C0GF6.J5 | 06 | 08 | 10 | 2252 505 ..055 |
| 15 | ±5 | 5.0 | 5.0 | 3.2 | D150J20C0GF6.J5 | 06 | 08 | 10 | 2252 505 ..105 |
| 18 | ±5 | 5.0 | 5.0 | 3.2 | D180J20C0GF6.J5 | 06 | 08 | 10 | 2252 505 ..155 |
| 22 | ±5 | 5.0 | 5.0 | 3.2 | D220J20C0GF6.J5 | 06 | 08 | 10 | 2252 505 ..205 |
| 27 | ±5 | 5.0 | 5.0 | 3.2 | D270J20C0GF6.J5 | 06 | 08 | 10 | 2252 505 ..255 |
| 33 | ±5 | 5.0 | 5.0 | 3.2 | D330J20C0GF6.J5 | 06 | 08 | 10 | 2252 505 ..305 |
| 39 | ±5 | 5.0 | 5.0 | 3.2 | D390J20C0GF6.J5 | 06 | 08 | 10 | 2252 505 ..355 |
| 47 | ±5 | 6.5 | 5.0 | 3.2 | D470J25C0GF6.J5 | 06 | 08 | 10 | 2252 505 ..405 |
| **Class 1 SL0** | | | | | | | | | |
| 56 | ±5 | 5.0 | 5.0 | 3.2 | D560J20SL0F6.J5 | 06 | 08 | 10 | 2252 565 ..505 |
| 68 | ±5 | 5.0 | 5.0 | 3.2 | D680J20SL0F6.J5 | 06 | 08 | 10 | 2252 565 ..605 |
| 82 | ±5 | 5.0 | 5.0 | 3.2 | D820J20SL0F6.J5 | 06 | 08 | 10 | 2252 565 ..805 |
| 100 | ±5 | 5.0 | 5.0 | 3.2 | D101J20SL0F6.J5 | 06 | 08 | 10 | 2252 565 ..015 |
| 150 | ±5 | 6.5 | 5.0 | 3.2 | D151J25SL0F6.J5 | 06 | 08 | 10 | 2252 565 ..115 |
| 180 | ±5 | 6.5 | 5.0 | 3.2 | D181J25SL0F6.J5 | 06 | 08 | 10 | 2252 565 ..165 |
| 220 | ±5 | 6.5 | 5.0 | 3.2 | D221J25SL0F6.J5 | 06 | 08 | 10 | 2252 565 ..215 |

**Notes**

1. Maximum thickness 4.0 mm.
2. SH = seated height.
3. Packaging codes refer to inward kinked leads. Other styles available on request.
4. 8th and 9th digit of the catalogue number to be completed with the packaging code.

**Table 2 Class 2, 50 V (DC), kinked**; capacitance, mechanical dimensions and ordering information; note 1

| C (pF) | TOL. (%) | $D_{max}$ (mm) | LEAD SPACING F (mm) | SH[2] (mm) | CLEAR TEXT CODE | PACKAGING CODE 8th AND 9th DIGIT[3] | | | CATALOGUE NUMBER[4] |
|---|---|---|---|---|---|---|---|---|---|
| | | | | | 13th DIGIT: T = REEL; U = AMMO; 3 = BULK | REEL | AMMO | BULK | |
| **Class 2 Y5P** | | | | | | | | | |
| 330 | ±10 | 5.0 | 5.0 | 3.2 | D331K20Y5PF6.J5 | 06 | 08 | 10 | 2252 615 ..311 |
| 470 | ±10 | 5.0 | 5.0 | 3.2 | D471K20Y5PF6.J5 | 06 | 08 | 10 | 2252 615 ..411 |
| 680 | ±10 | 5.0 | 5.0 | 3.2 | D681K20Y5PF6.J5 | 06 | 08 | 10 | 2252 615 ..611 |
| 1000 | ±10 | 5.0 | 5.0 | 3.2 | D102K20Y5PF6.J5 | 06 | 08 | 10 | 2252 615 ..021 |
| 1500 | ±10 | 5.0 | 5.0 | 3.2 | D152K20Y5PF6.J5 | 06 | 08 | 10 | 2252 615 ..121 |
| 1800 | ±10 | 5.0 | 5.0 | 3.2 | D182K20Y5PF6.J5 | 06 | 08 | 10 | 2252 615 ..171 |
| 2200 | ±10 | 6.5 | 5.0 | 3.2 | D222K25Y5PF6.J5 | 06 | 08 | 10 | 2252 615 ..221 |
| 3300 | ±10 | 6.5 | 5.0 | 3.2 | D332K25Y5PF6.J5 | 06 | 08 | 10 | 2252 615 ..321 |
| 4700 | ±10 | 7.5 | 5.0 | 3.2 | D472K29Y5PF6.J5 | 06 | 08 | 10 | 2252 615 ..421 |
| 6800 | ±10 | 8.5 | 5.0 | 3.2 | D682K33Y5PF6.J5 | 06 | 08 | 10 | 2252 615 ..621 |
| 10000 | ±10 | 10.0 | 5.0 | 3.2 | D103K39Y5PF6.J5 | 06 | 08 | 10 | 2252 615 ..031 |
| **Class 2 Z5U** | | | | | | | | | |
| 1000 | ±20 | 5.0 | 5.0 | 3.2 | D102M20Z5UF6.J5 | 06 | 08 | 10 | 2252 645 ..022 |
| 1500 | ±20 | 5.0 | 5.0 | 3.2 | D152M20Z5UF6.J5 | 06 | 08 | 10 | 2252 645 ..122 |
| 2200 | ±20 | 5.0 | 5.0 | 3.2 | D222M20Z5UF6.J5 | 06 | 08 | 10 | 2252 645 ..222 |
| 3300 | ±20 | 5.0 | 5.0 | 3.2 | D332M20Z5UF6.J5 | 06 | 08 | 10 | 2252 645 ..322 |
| 4700 | ±20 | 6.5 | 5.0 | 3.2 | D472M25Z5UF6.J5 | 06 | 08 | 10 | 2252 645 ..422 |
| 6800 | ±20 | 6.5 | 5.0 | 3.2 | D682M25Z5UF6.J5 | 06 | 08 | 10 | 2252 645 ..622 |
| 10000 | ±20 | 7.5 | 5.0 | 3.2 | D103M29Z5UF6.J5 | 06 | 08 | 10 | 2252 645 ..032 |
| 15000 | ±20 | 8.5 | 5.0 | 3.2 | D153M33Z5UF6.J5 | 06 | 08 | 10 | 2252 645 ..132 |
| 22000 | ±20 | 10.0 | 5.0 | 3.2 | D223M39Z5UF6.J5 | 06 | 08 | 10 | 2252 645 ..232 |
| **Class 2 Z5V** | | | | | | | | | |
| 4700 | +80/–20 | 5.0 | 5.0 | 3.2 | D472Z20Z5VF6.J5 | 06 | 08 | 10 | 2252 655 ..423 |
| 10000 | +80/–20 | 6.5 | 5.0 | 3.2 | D103Z25Z5VF6.J5 | 06 | 08 | 10 | 2252 655 ..033 |
| 22000 | +80/–20 | 7.5 | 5.0 | 3.2 | D223Z29Z5VF6.J5 | 06 | 08 | 10 | 2252 655 ..233 |
| 47000 | +80/–20 | 10.0 | 5.0 | 3.2 | D473Z39Z5VF6.J5 | 06 | 08 | 10 | 2252 655 ..433 |

**Notes**

1. Maximum thickness 4.0 mm.
2. SH = seated height.
3. Packaging codes refer to inward kinked leads. Other styles available on request.
4. 8th and 9th digit of the catalogue number to be completed with the packaging code.

## ELECTRICAL CHARACTERISTICS

The capacitors meet the essential requirements of *"EIA 198"*. Unless stated otherwise all electrical values apply at an ambient temperature of 25 ±3 °C, at normal atmospheric conditions.

| DESCRIPTION | VALUE |
|---|---|
| Capacitance range: | |
| Class 1, at 1 MHz, 1.2 V (RMS); note 1 | 1.0 to 220 pF |
| Class 2, at 1 kHz, 1 ±0.2 V (RMS) | 330 to 47000 pF |
| Tolerance on capacitance | ±5%, ±10%, ±20%, +80%/−20% |
| Dielectric strength | 250% of rated voltage |
| Insulation resistance at 50 V (DC) | ≥10000 MΩ |
| Temperature coefficients on capacitance: | |
| Class 1 | NP0, SL0 |
| Class 2 | Y5P, Z5U, Z5V |
| Dissipation factor: | |
| Class 1, C ≤ 30 pF | $\leq 20 \times (10/C + 0.7) \times 10^{-4}$ max. |
| Class 1, C > 30 pF | $\leq 20 \times 10^{-4}$ |
| Class 2 | ≤3.0% |
| Operating temperature range | −30 to +85 °C |

**Note**

1. 1 kHz, 1 ±0.2 V (RMS) for capacitance values higher than 1000 pF.

## PACKAGING

The capacitors are supplied in bulk packaging (cardboard boxes), in tape on reel or in ammopack (see Table 3).

**Table 3** Size codes and packaging quantities

| $D_{max}$ (mm) | SIZE CODE | PACKAGING QUANTITIES | | |
|---|---|---|---|---|
| | | BULK | REEL | AMMO |
| 5.0 (0.20") | 20 | 1000 | 2500 | 2000 |
| 6.5 (0.25") | 25 | | | |
| 7.5 (0.29") | 29 | | | |
| 8.5 (0.33") | 33 | | | |
| 10.0 (0.39") | 39 | | | |
| 11.0 (0.43") | 43 | | | |

**Kinked capacitors on tape, lead spacing 5.0 mm (0.2 inch)**

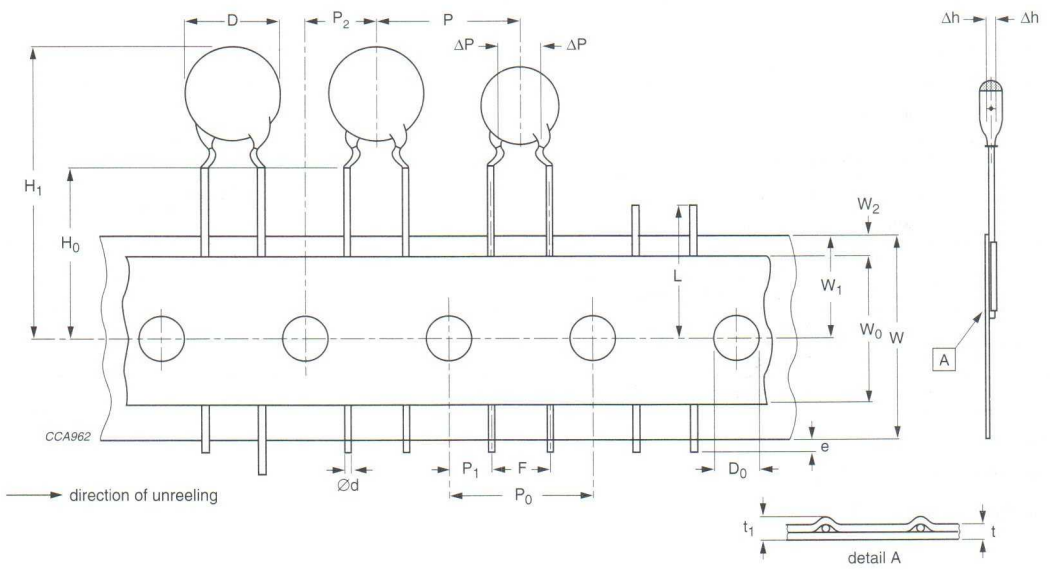


For dimensions see Table 4.

Fig.3 Capacitors, lead spacing 5.0 mm, on tape.

**Table 4** Dimensions of tape; see Fig.3

| SYMBOL | PARAMETER | DIMENSIONS (mm) | |
|---|---|---|---|
| | | NOMINAL | TOLERANCE |
| D | body diameter | 11.0 max. | – |
| d | lead diameter | 0.6 | ±0.05 |
| P | pitch between capacitors | 12.7 | ±1.0 |
| $P_0$ | feed-hole pitch | 12.7 | ±0.3; note 1 |
| ΔP | plane deviation | 1.0 max. | – |
| $P_1$ | feed-hole centre to lead centre | 3.85 | ±0.7; note 2 |
| $P_2$ | feed-hole centre to component centre | 6.35 | ±1.3; note 2 |
| F | lead spacing | 5.0 | +0.6<br>−0.4 |
| Δh | component alignment | 0 | ±1.0 |
| Δs | deviation along tape, left or right | 0 | ±1.0 |
| W | tape width | 18.0 | +1.0<br>−0.5 |
| $W_0$ | hold-down tape width | 5.0 min. | – |
| $W_1$ | hole position | 9.0 | +0.75<br>−0.5 |
| $W_2$ | hold-down tape margin | 3.0 max. | – |
| $H_0$ | height to seating plane | 16.0 | ±0.5 |
| $H_1$ | maximum component height | 32.0 | – |
| e | lead end protrusion | 1.0 max. | – |
| L | maximum length of snipped lead | 11.0 | – |
| $D_0$ | feed-hole diameter | 4.0 | ±0.2 |
| t | total tape thickness | 0.9 max. | – |
| $t_1$ | maximum thickness of tape and wires | 1.5 max. | – |

**Notes**

1. Cumulative pitch error: ±≤1 mm/20 pitches.
2. Obliquity maximum 3°.

REEL AND TAPE DATA

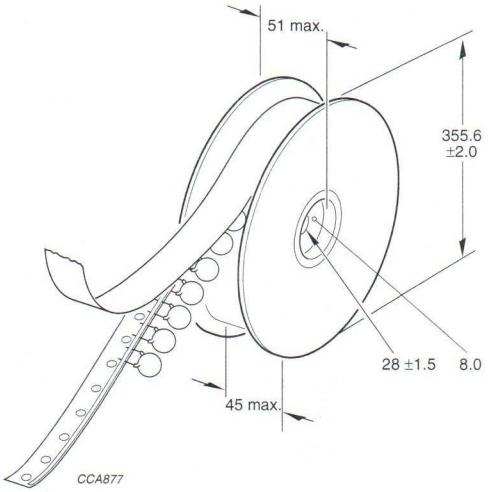


Dimensions in mm.

Fig.4 Reel with capacitors on tape.

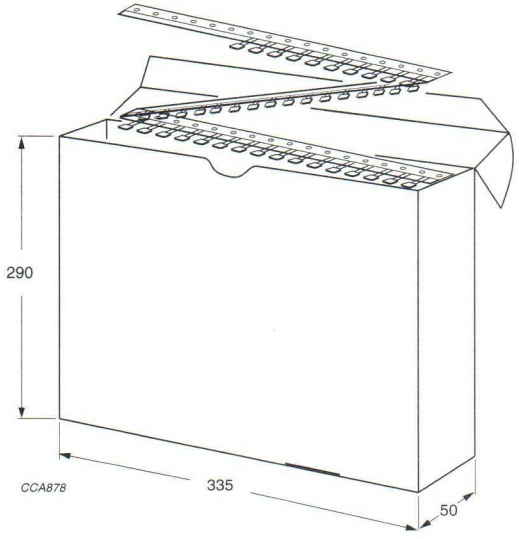


Dimensions in mm.

Fig.5 Ammopack with capacitors on tape.

# Ceramic disc capacitors

## Class 1 and 2, 500 V (DC) general purpose

### FEATURES

- Low losses
- High stability
- High capacitance in small size
- Kinked (preferred) or straight leads.

### APPLICATIONS

- Bypassing
- Coupling
- Resonant circuit.

### DESCRIPTION

The capacitors consist of a ceramic disc both sides of which are silver-plated. Connection leads are made of tinned copper having a diameter of 0.6 mm.

The capacitors have inward kinked leads with a spacing of 5 mm (0.200") or 7.5 mm (0.300") and a lead length from 4 to 30 mm. Encapsulation is made of phenolic resin.

### QUICK REFERENCE DATA

| DESCRIPTION | VALUE |
|---|---|
| Capacitance range: | |
| Class 1 | 10 to 82 pF |
| Class 2 | 100 to 22000 pF |
| Rated DC voltage | 500 V |
| Dielectric strength | 250% of rated voltage |
| Insulation resistance at 500 V (DC) | ≥10000 MΩ |
| Tolerance on capacitance | ±5%, ±10%, ±20% |
| Dissipation factor: | |
| Class 1, $C \leq 30$ pF | $\leq 20 \times (10/C + 0.7) \times 10^{-4}$ max. |
| Class 1, $C > 30$ pF | $\leq 20 \times 10^{-4}$ |
| Class 2 | ≤3.0% |
| Temperature coefficients | NP0, SL0, Y5P, Z5U |
| Sectional specifications | IEC 384-8, IEC 384-9, EIA198 |
| Climatic category: | |
| Class 1 | 55/85/21 |
| Class 2 | 10/85/21 |

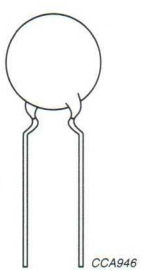


Fig.1 Simplified outline.

## MECHANICAL DATA

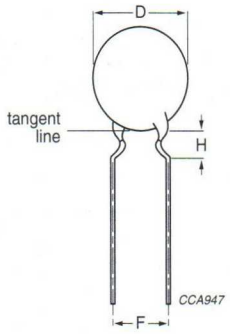


Dimensions in mm.
For dimensions see Tables 1 and 2.

Fig.2 Capacitors with 5 mm (0.20") lead spacing.

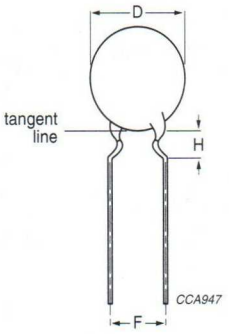


Dimensions in mm.
For dimensions see Tables 1 and 2.

Fig.3 Capacitors with 7.5 mm (0.30") lead spacing.

## MARKING

Marking indicates capacitance value and tolerance in accordance with *"EIA198"*.

**ORDERING INFORMATION (preferred types)**

**Table 1 Class 1, 500 V (DC), kinked**; capacitance, mechanical dimensions and ordering information; note 1

| C (pF) | TOL. (%) | $D_{max}$ (mm) | LEAD SPACING F (mm) | SH[2] (mm) | CLEAR TEXT CODE | PACKAGING CODE 8th AND 9th DIGIT[3] | | | CATALOGUE NUMBER[4] |
|---|---|---|---|---|---|---|---|---|---|
| | | | | | 13th DIGIT: T = REEL; U = AMMO; 3 = BULK | REEL | AMMO | BULK | |
| **Class 1 NP0** | | | | | | | | | |
| 10 | ±5 | 5.0 | 5.0 | 3.2 | D100J20C0GL6.J5 | 06 | 08 | 10 | 2252 508 ..005 |
| 12 | ±5 | 5.0 | 5.0 | 3.2 | D120J20C0GL6.J5 | 06 | 08 | 10 | 2252 508 ..055 |
| 15 | ±5 | 5.0 | 5.0 | 3.2 | D150J20C0GL6.J5 | 06 | 08 | 10 | 2252 508 ..105 |
| 18 | ±5 | 6.5 | 5.0 | 3.2 | D180J25C0GL6.J5 | 06 | 08 | 10 | 2252 508 ..155 |
| 22 | ±5 | 6.5 | 5.0 | 3.2 | D220J25C0GL6.J5 | 06 | 08 | 10 | 2252 508 ..205 |
| 27 | ±5 | 6.5 | 5.0 | 3.2 | D270J25C0GL6.J5 | 06 | 08 | 10 | 2252 508 ..255 |
| **Class 1 SL0** | | | | | | | | | |
| 33 | ±5 | 5.0 | 5.0 | 3.2 | D330J20SL0L6.J5 | 06 | 08 | 10 | 2252 568 ..305 |
| 39 | ±5 | 5.0 | 5.0 | 3.2 | D390J20SL0L6.J5 | 06 | 08 | 10 | 2252 568 ..355 |
| 47 | ±5 | 5.0 | 5.0 | 3.2 | D470J20SL0L6.J5 | 06 | 08 | 10 | 2252 568 ..405 |
| 56 | ±5 | 6.5 | 5.0 | 3.2 | D560J25SL0L6.J5 | 06 | 08 | 10 | 2252 568 ..505 |
| 68 | ±5 | 6.5 | 5.0 | 3.2 | D680J25SL0L6.J5 | 06 | 08 | 10 | 2252 568 ..605 |
| 82 | ±5 | 6.5 | 5.0 | 3.2 | D820J25SL0L6.J5 | 06 | 08 | 10 | 2252 568 ..805 |

**Notes**

1. Maximum thickness 4.0 mm.
2. SH = seated height.
3. Packaging codes refer to inward kinked leads. Other styles available on request.
4. 8th and 9th digit of the catalogue number to be completed with the packaging code.

**Table 2 Class 2, 500 V (DC), kinked**; capacitance, mechanical dimensions and ordering information; note 1

| C (pF) | TOL. (%) | $D_{max}$ (mm) | LEAD SPACING F (mm) | SH[2] (mm) | CLEAR TEXT CODE | PACKAGING CODE 8th AND 9th DIGIT[3] | | | CATALOGUE NUMBER[4] |
|---|---|---|---|---|---|---|---|---|---|
| | | | | | 13th DIGIT: T = REEL; U = AMMO; 3 = BULK | REEL | AMMO | BULK | |
| **Class 2 Y5P** | | | | | | | | | |
| 100 | ±10 | 5.0 | 5.0 | 3.2 | D101K20Y5PL6.J5 | 06 | 08 | 10 | 2252 618 ..011 |
| 150 | ±10 | 5.0 | 5.0 | 3.2 | D151K20Y5PL6.J5 | 06 | 08 | 10 | 2252 618 ..111 |
| 220 | ±10 | 5.0 | 5.0 | 3.2 | D221K20Y5PL6.J5 | 06 | 08 | 10 | 2252 618 ..211 |
| 330 | ±10 | 5.0 | 5.0 | 3.2 | D331K20Y5PL6.J5 | 06 | 08 | 10 | 2252 618 ..311 |
| 470 | ±10 | 5.0 | 5.0 | 3.2 | D471K20Y5PL6.J5 | 06 | 08 | 10 | 2252 618 ..411 |
| 680 | ±10 | 6.5 | 5.0 | 3.2 | D681K25Y5PL6.J5 | 06 | 08 | 10 | 2252 618 ..611 |
| 1000 | ±10 | 6.5 | 5.0 | 3.2 | D102K25Y5PL6.J5 | 06 | 08 | 10 | 2252 618 ..021 |
| 1500 | ±10 | 7.5 | 5.0 | 3.2 | D152K29Y5PL6.J5 | 06 | 08 | 10 | 2252 618 ..121 |
| 2200 | ±10 | 8.5 | 5.0 | 3.2 | D222K33Y5PL6.J5 | 06 | 08 | 10 | 2252 618 ..221 |
| 3300 | ±10 | 10.0 | 5.0 | 3.2 | D332K39Y5PL6.J5 | 06 | 08 | 10 | 2252 618 ..321 |
| 4700 | ±10 | 12.0 | 7.5 | 4.0 | D472K47Y5PL63J7 | – | – | 31 | 2252 618 ..421 |
| 6800 | ±10 | 13.5 | 7.5 | 4.0 | D682K53Y5PL63J7 | – | – | 31 | 2252 618 ..621 |
| 10000 | ±10 | 17.5 | 7.5 | 4.0 | D103K89Y5PL63J7 | – | – | 31 | 2252 618 ..031 |
| **Class 2 Z5U** | | | | | | | | | |
| 1000 | ±20 | 5.0 | 5.0 | 3.2 | D102M20Z5UL6.J5 | 06 | 08 | 10 | 2252 648 ..022 |
| 1500 | ±20 | 6.5 | 5.0 | 3.2 | D152M25Z5UL6.J5 | 06 | 08 | 10 | 2252 648 ..122 |
| 2200 | ±20 | 6.5 | 5.0 | 3.2 | D222M25Z5UL6.J5 | 06 | 08 | 10 | 2252 648 ..222 |
| 3300 | ±20 | 7.5 | 5.0 | 3.2 | D332M29Z5UL6.J5 | 06 | 08 | 10 | 2252 648 ..322 |
| 4700 | ±20 | 8.5 | 5.0 | 3.2 | D472M33Z5UL6.J5 | 06 | 08 | 10 | 2252 648 ..422 |
| 6800 | ±20 | 10.0 | 5.0 | 3.2 | D682M39Z5UL6.J5 | 06 | 08 | 10 | 2252 648 ..622 |
| 10000 | ±20 | 12.0 | 7.5 | 4.0 | D103M47Z5UL6.J7 | – | – | 31 | 2252 648 ..032 |
| 15000 | ±20 | 13.5 | 7.5 | 4.0 | D153M53Z5UL6.J7 | – | – | 31 | 2252 648 ..132 |
| 22000 | ±20 | 15.0 | 7.5 | 4.0 | D223M59Z5UL6.J7 | – | – | 31 | 2252 648 ..232 |

**Notes**

1. Maximum thickness 4.0 mm.
2. SH = seated height.
3. Packaging codes refer to inward kinked leads. Other styles available on request.
4. 8th and 9th digit of the catalogue number to be completed with the packaging code.

## ELECTRICAL CHARACTERISTICS

The capacitors meet the essential requirements of *"EIA 198"*. Unless stated otherwise all electrical values apply at an ambient temperature of 25 ±3 °C, at normal atmospheric conditions.

| DESCRIPTION | VALUE |
|---|---|
| Capacitance range: | |
| Class 1, at 1 MHz, 1.2 V (RMS); note 1 | 10 to 82 pF |
| Class 2, at 1 kHz, 1 ±0.2 V (RMS) | 100 to 22000 pF |
| Tolerance on capacitance | ±5%, ±10%, ±20% |
| Dielectric strength | 250% of rated voltage |
| Insulation resistance at 500 V (DC) | ≥10000 MΩ |
| Temperature coefficients on capacitance: | |
| Class 1 | NP0, SL0 |
| Class 2 | Y5P, Z5U |
| Dissipation factor: | |
| Class 1, C ≤ 30 pF | $\leq 20 \times (10/C + 0.7) \times 10^{-4}$ max. |
| Class 1, C > 30 pF | $\leq 20 \times 10^{-4}$ |
| Class 2 | ≤3.0% |
| Operating temperature range | −30 to +85 °C |

**Note**

1. 1 kHz, 1 ±0.2 V (RMS) for capacitance values higher than 1000 pF.

## PACKAGING

The capacitors are supplied in bulk packaging (cardboard boxes), in tape on reel or in ammopack (see Table 3).

**Table 3** Size codes and packaging quantities

| $D_{max}$ (mm) | SIZE CODE | PACKAGING QUANTITIES | | |
|---|---|---|---|---|
| | | BULK | REEL | AMMO |
| 5.0 (0.20") | 20 | 1000 | 2000 | 2000 |
| 6.5 (0.25") | 25 | | | |
| 7.5 (0.29") | 29 | | | |
| 8.5 (0.33") | 33 | | | |
| 10.0 (0.39") | 39 | | | |
| 11.0 (0.43") | 43 | | | |
| 12.0 (0.47") | 47 | 1000 | – | – |
| 13.5 (0.53") | 53 | 500 | – | – |
| 15.0 (0.59") | 59 | | | |
| 17.5 (0.69") | 69 | | | |

**Kinked capacitors on tape, lead spacing 5.0 mm (0.2 inch)**

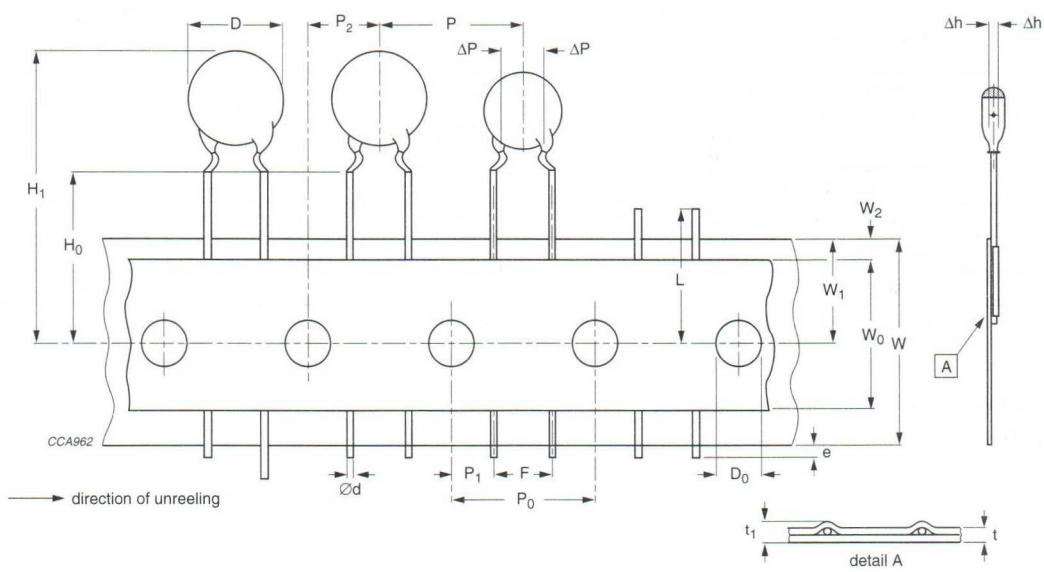


For dimensions see Table 4.

Fig.4 Capacitors, lead spacing 5.0 mm, on tape.

**Table 4** Dimensions of tape; see Fig.4

| SYMBOL | PARAMETER | DIMENSIONS (mm) | |
|---|---|---|---|
| | | NOMINAL | TOLERANCE |
| D | body diameter | 11.0 max. | – |
| d | lead diameter | 0.6 | ±0.05 |
| P | pitch between capacitors | 12.7 | ±1.0 |
| $P_0$ | feed-hole pitch | 12.7 | ±0.3; note 1 |
| ΔP | plane deviation | 1.0 max. | – |
| $P_1$ | feed-hole centre to lead centre | 3.85 | ±0.7; note 2 |
| $P_2$ | feed-hole centre to component centre | 6.35 | ±1.3; note 2 |
| F | lead spacing | 5.0 | +0.6<br>−0.4 |
| $F_0$ | lead-to-lead | 5.08 | +0.5<br>−0.1 |
| Δh | component alignment | 0 | ±1.0 |
| Δs | deviation along tape, left or right | 0 | ±1.0 |
| W | tape width | 18.0 | +1.0<br>−0.5 |
| $W_0$ | hold-down tape width | 5.0 min. | – |
| $W_1$ | hole position | 9.0 | +0.75<br>−0.5 |
| $W_2$ | hold-down tape margin | 3.0 max. | – |
| $H_0$ | height to seating plane | 16.0 | ±0.5 |
| $H_1$ | maximum component height | 32.0 | – |
| e | lead end protrusion | 1.0 max. | – |
| L | maximum length of snipped lead | 11.0 | – |
| $D_0$ | feed-hole diameter | 4.0 | ±0.2 |
| t | total tape thickness | 0.9 max. | – |
| $t_1$ | maximum thickness of tape and wires | 1.5 max. | – |

**Notes**

1. Cumulative pitch error: ±≤1 mm/20 pitches.
2. Obliquity maximum 3°.

REEL AND TAPE DATA

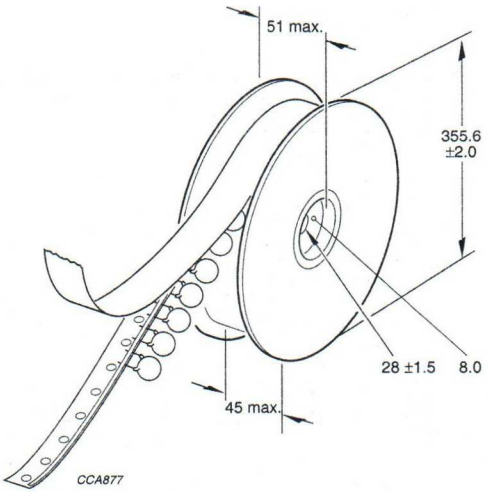


Dimensions in mm.

Fig.5 Reel with capacitors on tape.

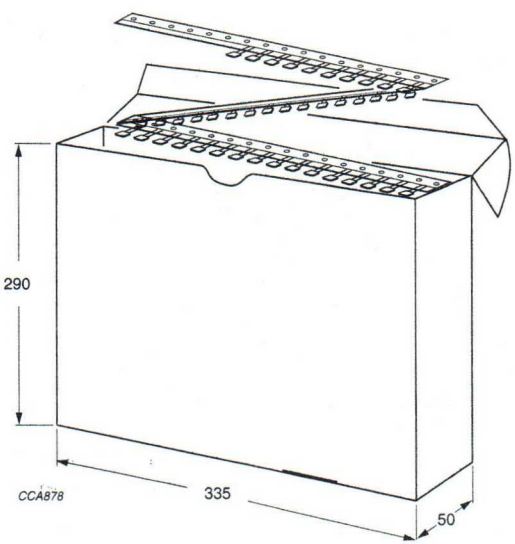


Dimensions in mm.

Fig.6 Ammopack with capacitors on tape.

# Ceramic disc capacitors

# Class 1 and 2, 1/2/3/6 kV general purpose

## FEATURES

- Low losses
- High stability
- High capacitance in small size
- Kinked (preferred), flanged or straight leads.

## APPLICATIONS

- DC high voltage
- Pulse high voltage
- SMPS
- HV power supply
- HF ballast.

## DESCRIPTION

The capacitors consist of a ceramic disc both sides of which are silver-plated. Connection leads are made of tinned copper having a diameter of 0.6 mm or 0.8 mm up to 3 kV and 0.8 mm for 6 kV.

The capacitors may be supplied with outward kinked, flanged or straight leads with a lead spacing of 5 mm (0.200"), 7.5 mm (0.300") or 10 mm (0.400") and a lead length from 4 to 30 mm. The standard tolerance on capacitance is ±5% or ±10% for class 1 capacitors and ±10% or ±20% for class 2 capacitors. Encapsulation is made of gold-coloured epoxy-resin, flammable resistant in accordance with *"UL94V-0"*.

## QUICK REFERENCE DATA

| DESCRIPTION | VALUE |
|---|---|
| Capacitance range: | |
| Class 1 | 10 to 270 pF |
| Class 2 | 100 to 22000 pF |
| Rated DC voltage | 1 kV; 2 kV; 3 kV; 6 kV |
| Dielectric strength | 200% of rated voltage |
| Insulation resistance at 500 V (DC) | ≥10000 MΩ |
| Tolerance on capacitance | ±5%, ±10% and ±20%; note 1 |
| Dissipation factor: | |
| Class 1, C ≤ 30 pF | $\leq 20 \times (10/C + 0.7) \times 10^{-4}$ max. |
| Class 1, C > 30 pF | $\leq 20 \times 10^{-4}$ |
| Class 2 | ≤3.0% |
| Temperature coefficients | SL, S3N, Y5P, Z5U |
| Sectional specifications | IEC 384-8, IEC 384-9, EIA198 |
| Climatic category: | |
| Class 1 | 55/85/21 |
| Class 2 | 10/85/21 |

**Note**

1. Other tolerances available on request.

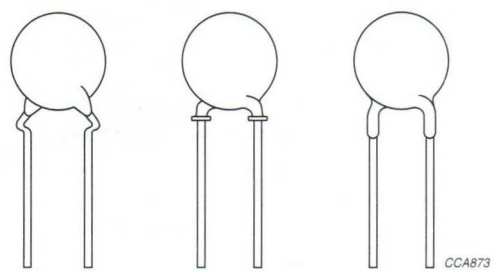


Fig.1 Simplified outlines.

## MECHANICAL DATA

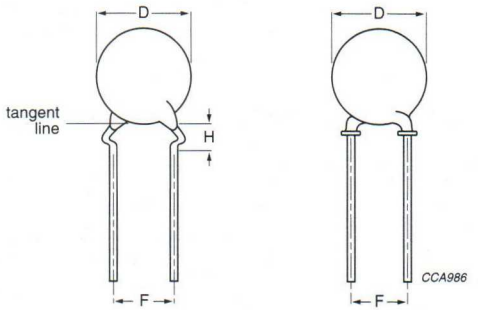


Dimensions in mm.
For dimensions see Tables 1 to 6.

Fig.2 Capacitors with 5 mm (0.20") lead spacing.

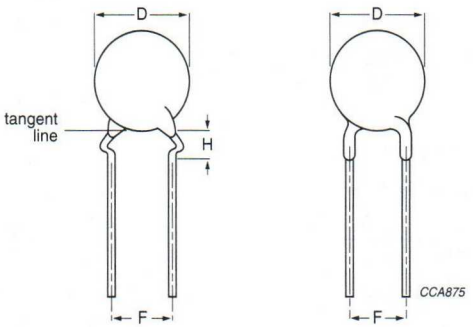


Dimensions in mm.
For dimensions see Tables 1 to 6.

Fig.3 Capacitors with 7.5 mm (0.30") and 10 mm (0.40") lead spacing.

## MARKING

Flanged capacitors are marked as follows:

- The body of the capacitors is tan coloured; capacitance value and voltage are indicated by a marking code on the body.
- SL capacitors do not have the temperature coefficient indication on the body.
- The temperature dependency is indicated by a yellow or a blue coloured cap, respectively for Y5P and Z5U dielectrics.

Straight and kinked leaded versions are gold coloured. Marking indicates capacitance value and tolerance in accordance with *"EIA198"*, and voltage.

## ORDERING INFORMATION

**Table 1 1 kV (DC), kinked**; capacitance, mechanical dimensions and ordering information; note 1

| C (pF) | TOL. (%) | $D_{max}$ (mm) | LEAD SPACING F (mm) | SH[2] (mm) | CLEAR TEXT CODE | PACKAGING CODE 8th AND 9th DIGIT[3] | | | CATALOGUE NUMBER[4] |
|---|---|---|---|---|---|---|---|---|---|
| | | | KINKED | | 13th DIGIT: T = REEL; U = AMMO; 3 = BULK | REEL | AMMO | BULK | KINKED |
| **Class 1 SL0** | | | | | | | | | |
| 10 | ±10 | 6.5 | 5.0 | 3.2 | S100K25SL0N6.K5 | 13 | 14 | 15 | 2252 561 ..006 |
| 15 | ±10 | 6.5 | 5.0 | 3.2 | S150K25SL0N6.K5 | 13 | 14 | 15 | 2252 561 ..106 |
| 22 | ±10 | 6.5 | 5.0 | 3.2 | S220K25SL0N6.K5 | 13 | 14 | 15 | 2252 561 ..206 |
| 33 | ±10 | 6.5 | 5.0 | 3.2 | S330K25SL0N6.K5 | 13 | 14 | 15 | 2252 561 ..306 |
| 47 | ±10 | 6.5 | 5.0 | 3.2 | S470K25SL0N6.K5 | 13 | 14 | 15 | 2252 561 ..406 |
| 68 | ±10 | 6.5 | 5.0 | 3.2 | S680K25SL0N6.K5 | 13 | 14 | 15 | 2252 561 ..606 |
| 100 | ±10 | 7.5 | 5.0 | 3.2 | S101K29SL0N6.K5 | 13 | 14 | 15 | 2252 561 ..016 |
| 150 | ±10 | 10.0 | 5.0 | 3.2 | S151K39SL0N6.K5 | 13 | 14 | 15 | 2252 561 ..116 |
| 220 | ±10 | 10.0 | 5.0 | 3.2 | S221K39SL0N6.K5 | 13 | 14 | 15 | 2252 561 ..216 |
| **Class 2 Y5P** | | | | | | | | | |
| 100 | ±10 | 6.5 | 5.0 | 3.2 | S101K25Y5PN6.K5 | 13 | 14 | 15 | 2252 611 ..016 |
| 150 | ±10 | 6.5 | 5.0 | 3.2 | S151K25Y5PN6.K5 | 13 | 14 | 15 | 2252 611 ..116 |
| 220 | ±10 | 6.5 | 5.0 | 3.2 | S221K25Y5PN6.K5 | 13 | 14 | 15 | 2252 611 ..216 |
| 330 | ±10 | 6.5 | 5.0 | 3.2 | S331K25Y5PN6.K5 | 13 | 14 | 15 | 2252 611 ..316 |
| 470 | ±10 | 6.5 | 5.0 | 3.2 | S471K25Y5PN6.K5 | 13 | 14 | 15 | 2252 611 ..416 |
| 680 | ±10 | 6.5 | 5.0 | 3.2 | S681K25Y5PN6.K5 | 13 | 14 | 15 | 2252 611 ..616 |
| 1000 | ±10 | 7.5 | 5.0 | 3.2 | S102K29Y5PN6.K5 | 13 | 14 | 15 | 2252 611 ..026 |
| 1500 | ±10 | 8.5 | 5.0 | 3.2 | S152K33Y5PN6.K5 | 13 | 14 | 15 | 2252 611 ..126 |
| 2200 | ±10 | 10.0 | 5.0 | 3.2 | S222K39Y5PN6.K5 | 13 | 14 | 15 | 2252 611 ..226 |
| 3300 | ±10 | 11.0 | 5.0 | 3.2 | S332K43Y5PN6.K5 | 13 | 14 | 15 | 2252 611 ..326 |
| 4700 | ±10 | 12.0 | 7.5 | 4.0 | S472K47Y5PN63K7 | – | – | 37 | 2252 611 37426 |
| 6800 | ±10 | 15.0 | 7.5 | 4.0 | S682K59Y5PN63K7 | – | – | 37 | 2252 611 37626 |
| 10000 | ±10 | 17.5 | 7.5 | 4.0 | S103K69Y5PN63K7 | – | – | 37 | 2252 611 37036 |

| C (pF) | TOL. (%) | $D_{max}$ (mm) | LEAD SPACING F (mm) KINKED | SH(2) (mm) | CLEAR TEXT CODE 13th DIGIT: T = REEL; U = AMMO; 3 = BULK | PACKAGING CODE 8th AND 9th DIGIT(3) REEL | AMMO | BULK | CATALOGUE NUMBER(4) KINKED |
|---|---|---|---|---|---|---|---|---|---|
| **Class 2 Z5U** | | | | | | | | | |
| 1000 | ±20 | 6.5 | 5.0 | 3.2 | S102M25Z5UN6.K5 | 13 | 14 | 15 | 2252 641 ..027 |
| 1500 | ±20 | 6.5 | 5.0 | 3.2 | S152M25Z5UN6.K5 | 13 | 14 | 15 | 2252 641 ..127 |
| 2200 | ±20 | 7.5 | 5.0 | 3.2 | S222M29Z5UN6.K5 | 13 | 14 | 15 | 2252 641 ..227 |
| 3300 | ±20 | 7.5 | 5.0 | 3.2 | S332M29Z5UN6.K5 | 13 | 14 | 15 | 2252 641 ..327 |
| 4700 | ±20 | 10.0 | 5.0 | 3.2 | S472M39Z5UN6.K5 | 13 | 14 | 15 | 2252 641 ..427 |
| 6800 | ±20 | 10.0 | 5.0 | 3.2 | S682M39Z5UN6.K5 | 13 | 14 | 15 | 2252 641 ..627 |
| 10000 | ±20 | 12.0 | 7.5 | 4.0 | S103M47Z5UN63K7 | – | – | 37 | 2252 641 37037 |
| 15000 | ±20 | 15.0 | 7.5 | 4.0 | S153M59Z5UN63K7 | – | – | 37 | 2252 641 37137 |
| 22000 | ±20 | 17.5 | 7.5 | 4.0 | S223M69Z5UN63K7 | – | – | 37 | 2252 641 37237 |

**Notes**

1. Maximum thickness 4.5 mm.
2. SH = seated height.
3. Packaging codes refer to outward kinked leads. Other styles available on request.
4. 8th and 9th digit of the catalogue number to be completed with the packaging code.

**Table 2 1 kV (DC), flanged**; capacitance, mechanical dimensions and ordering information; note 1

| C (pF) | TOL. (%) | $D_{max}$ (mm) | LEAD SPACING F (mm) | SH[2] (mm) | CLEAR TEXT CODE | PACKAGING CODE 8th AND 9th DIGIT[3] | | | CATALOGUE NUMBER[4] |
|---|---|---|---|---|---|---|---|---|---|
| | | | FLANGED | | 12th AND 13th DIGIT: WG = REEL; WJ = AMMO; WF = BULK | REEL | AMMO | BULK | FLANGED |
| **Class 1 SL0** | | | | | | | | | |
| 10 | ±5 | 7 | 5.0 | 10 | D100J28SL0N..AP | 13 | 14 | 15 | 2251 561 ..005 |
| 12 | ±5 | 7 | 5.0 | 10 | D120J28SL0N..AP | 13 | 14 | 15 | 2251 561 ..055 |
| 15 | ±5 | 7 | 5.0 | 10 | D150J28SL0N..AP | 13 | 14 | 15 | 2251 561 ..105 |
| 18 | ±5 | 7 | 5.0 | 10 | D180J28SL0N..AP | 13 | 14 | 15 | 2251 561 ..155 |
| 22 | ±5 | 7 | 5.0 | 10 | D220J28SL0N..AP | 13 | 14 | 15 | 2251 561 ..205 |
| 27 | ±5 | 7 | 5.0 | 10 | D270J28SL0N..AP | 13 | 14 | 15 | 2251 561 ..255 |
| 33 | ±5 | 7 | 5.0 | 10 | D330J28SL0N..AP | 13 | 14 | 15 | 2251 561 ..305 |
| 39 | ±5 | 7 | 5.0 | 10 | D390J28SL0N..AP | 13 | 14 | 15 | 2251 561 ..355 |
| 47 | ±5 | 7 | 5.0 | 10 | D470J28SL0N..AP | 13 | 14 | 15 | 2251 561 ..405 |
| 56 | ±5 | 7 | 5.0 | 10 | D560J28SL0N..AP | 13 | 14 | 15 | 2251 561 ..505 |
| 68 | ±5 | 8 | 5.0 | 11 | D680J31SL0N..AP | 13 | 14 | 15 | 2251 561 ..605 |
| 82 | ±5 | 8 | 5.0 | 11 | D820J31SL0N..AP | 13 | 14 | 15 | 2251 561 ..805 |
| 100 | ±5 | 8 | 5.0 | 11 | D101J31SL0N..AP | 13 | 14 | 15 | 2251 561 ..015 |
| 120 | ±5 | 10 | 5.0 | 12 | D121J35SL0N..AP | 13 | 14 | 15 | 2251 561 ..065 |
| 150 | ±5 | 10 | 5.0 | 13 | D151J39SL0N..AP | 13 | 14 | 15 | 2251 561 ..115 |
| 180 | ±5 | 10 | 5.0 | 13 | D181J39SL0N..AP | 13 | 14 | 15 | 2251 561 ..165 |
| 220 | ±5 | 10 | 5.0 | 13 | D221J39SL0N..AP | 13 | 14 | 15 | 2251 561 ..215 |
| 270 | ±5 | 12 | 5.0 | 15 | D271J47SL0N..AP | 13 | 14 | 15 | 2251 561 ..265 |
| 330 | ±5 | 12 | 5.0 | 15 | D331J47SL0N..AP | 13 | 14 | 15 | 2251 561 ..315 |
| **Class 2 Y5P** | | | | | | | | | |
| 100 | ±10 | 7 | 5.0 | 10 | D101K28Y5PN..SP | 13 | 14 | 15 | 2251 611 ..016 |
| 120 | ±10 | 7 | 5.0 | 10 | D121K28Y5PN..SP | 13 | 14 | 15 | 2251 611 ..066 |
| 150 | ±10 | 7 | 5.0 | 10 | D151K28Y5PN..SP | 13 | 14 | 15 | 2251 611 ..116 |
| 180 | ±10 | 7 | 5.0 | 10 | D181K28Y5PN..SP | 13 | 14 | 15 | 2251 611 ..166 |
| 220 | ±10 | 7 | 5.0 | 10 | D221K28Y5PN..SP | 13 | 14 | 15 | 2251 611 ..216 |
| 270 | ±10 | 7 | 5.0 | 10 | D271K28Y5PN..SP | 13 | 14 | 15 | 2251 611 ..266 |
| 330 | ±10 | 7 | 5.0 | 10 | D331K28Y5PN..SP | 13 | 14 | 15 | 2251 611 ..316 |
| 390 | ±10 | 7 | 5.0 | 10 | D391K28Y5PN..SP | 13 | 14 | 15 | 2251 611 ..366 |
| 470 | ±10 | 7 | 5.0 | 10 | D471K28Y5PN..SP | 13 | 14 | 15 | 2251 611 ..416 |
| 560 | ±10 | 7 | 5.0 | 10 | D561K28Y5PN..SP | 13 | 14 | 15 | 2251 611 ..516 |
| 680 | ±10 | 8 | 5.0 | 11 | D681K31Y5PN..SP | 13 | 14 | 15 | 2251 611 ..616 |
| 820 | ±10 | 8 | 5.0 | 11 | D821K31Y5PN..SP | 13 | 14 | 15 | 2251 611 ..816 |
| 1000 | ±10 | 8 | 5.0 | 11 | D102K31Y5PN..SP | 13 | 14 | 15 | 2251 611 ..026 |
| 1200 | ±10 | 9 | 5.0 | 12 | D122K35Y5PN..SP | 13 | 14 | 15 | 2251 611 ..076 |

| C (pF) | TOL. (%) | $D_{max}$ (mm) | LEAD SPACING F (mm) | SH[2] (mm) | CLEAR TEXT CODE | PACKAGING CODE 8th AND 9th DIGIT[3] | | | CATALOGUE NUMBER[4] |
|---|---|---|---|---|---|---|---|---|---|
| | | | FLANGED | | 12th AND 13th DIGIT: WG = REEL; WJ = AMMO; WF = BULK | REEL | AMMO | BULK | FLANGED |
| 1500 | ±10 | 9 | 5.0 | 13 | D152K35Y5PN..SP | 13 | 14 | 15 | 2251 611 ..126 |
| 1800 | ±10 | 9 | 5.0 | 12 | D182K35Y5PN..SP | 13 | 14 | 15 | 2251 611 ..176 |
| 2200 | ±10 | 10 | 5.0 | 13 | D222K39Y5PN..SP | 13 | 14 | 15 | 2251 611 ..226 |
| 2700 | ±10 | 11 | 5.0 | 15 | D272K47Y5PN..SP | 13 | 14 | 15 | 2251 611 ..276 |
| 3300 | ±10 | 11 | 5.0 | 15 | D332K47Y5PN..SP | 13 | 14 | 15 | 2251 611 ..326 |
| **Class 2 Z5U** | | | | | | | | | |
| 1000 | ±20 | 7 | 5.0 | 10 | D102M28Z5UN..SP | 13 | 14 | 15 | 2251 641 ..027 |
| 1200 | ±20 | 7 | 5.0 | 10 | D122M28Z5UN..SP | 13 | 14 | 15 | 2251 641 ..077 |
| 1500 | ±20 | 7 | 5.0 | 10 | D152M28Z5UN..SP | 13 | 14 | 15 | 2251 641 ..127 |
| 1800 | ±20 | 8 | 5.0 | 11 | D182M31Z5UN..SP | 13 | 14 | 15 | 2251 641 ..177 |
| 2200 | ±20 | 8 | 5.0 | 11 | D222M31Z5UN..SP | 13 | 14 | 15 | 2251 641 ..227 |
| 2700 | ±20 | 8 | 5.0 | 11 | D272M31Z5UN..SP | 13 | 14 | 15 | 2251 641 ..277 |
| 3300 | ±20 | 8 | 5.0 | 11 | D332M31Z5UN..SP | 13 | 14 | 15 | 2251 641 ..327 |
| 3900 | ±20 | 10 | 5.0 | 13 | D392M39Z5UN..SP | 13 | 14 | 15 | 2251 641 ..377 |
| 4700 | ±20 | 10 | 5.0 | 13 | D472M39Z5UN..SP | 13 | 14 | 15 | 2251 641 ..427 |
| 5600 | ±20 | 10 | 5.0 | 13 | D562M39Z5UN..SP | 13 | 14 | 15 | 2251 641 ..527 |
| 6800 | ±20 | 10 | 5.0 | 15 | D682M47Z5UN..SP | 13 | 14 | 15 | 2251 641 ..627 |
| 8200 | ±20 | 11 | 5.0 | 15 | D822M47Z5UN..SP | 13 | 14 | 15 | 2251 641 ..827 |
| 10000 | ±20 | 12 | 5.0 | 15 | D103M47Z5UN..SP | 13 | 14 | 15 | 2251 641 ..037 |

**Notes**

1. Maximum thickness 4.5 mm.
2. SH = seated height.
3. Packaging codes refer to flanged leads. Other styles available on request.
4. 8th and 9th digit of the catalogue number to be completed with the packaging code.

**Table 3 2 kV (DC), kinked**; capacitance, mechanical dimensions and ordering information; note 1

| C (pF) | TOL. (%) | $D_{max}$ (mm) | LEAD SPACING F (mm) | SH[2] (mm) | CLEAR TEXT CODE | PACKAGING CODE 8th AND 9th DIGIT[3] | | | CATALOGUE NUMBER[4] |
|---|---|---|---|---|---|---|---|---|---|
| | | | KINKED | | 13th DIGIT: T = REEL; U = AMMO; 3 = BULK | REEL | AMMO | BULK | KINKED |
| **Class 1 SL0** | | | | | | | | | |
| 10 | ±10 | 6.5 | 5.0 | 3.2 | S100K25SL0P6.K5 | 13 | 14 | 15 | 2252 562 ..006 |
| 15 | ±10 | 6.5 | 5.0 | 3.2 | S150K25SL0P6.K5 | 13 | 14 | 15 | 2252 562 ..106 |
| 22 | ±10 | 6.5 | 5.0 | 3.2 | S220K25SL0P6.K5 | 13 | 14 | 15 | 2252 562 ..206 |
| 33 | ±10 | 6.5 | 5.0 | 3.2 | S330K25SL0P6.K5 | 13 | 14 | 15 | 2252 562 ..306 |
| 47 | ±10 | 7.5 | 5.0 | 3.2 | S470K29SL0P6.K5 | 13 | 14 | 15 | 2252 562 ..406 |
| 68 | ±10 | 8.5 | 5.0 | 3.2 | S680K33SL0P6.K5 | 13 | 14 | 15 | 2252 562 ..606 |
| 100 | ±10 | 10.0 | 5.0 | 3.2 | S101K39SL0P6.K5 | 13 | 14 | 15 | 2252 562 ..016 |
| 150 | ±10 | 11.0 | 5.0 | 3.2 | S151K43SL0P6.K5 | 13 | 14 | 15 | 2252 562 ..116 |
| **Class 2 Y5P** | | | | | | | | | |
| 100 | ±10 | 6.5 | 5.0 | 3.2 | S101K25Y5PP6.K5 | 13 | 14 | 15 | 2252 612 ..016 |
| 150 | ±10 | 6.5 | 5.0 | 3.2 | S151K25Y5PP6.K5 | 13 | 14 | 15 | 2252 612 ..116 |
| 220 | ±10 | 6.5 | 5.0 | 3.2 | S221K25Y5PP6.K5 | 13 | 14 | 15 | 2252 612 ..216 |
| 330 | ±10 | 6.5 | 5.0 | 3.2 | S331K25Y5PP6.K5 | 13 | 14 | 15 | 2252 612 ..316 |
| 470 | ±10 | 6.5 | 5.0 | 3.2 | S471K25Y5PP6.K5 | 13 | 14 | 15 | 2252 612 ..416 |
| 680 | ±10 | 7.5 | 5.0 | 3.2 | S681K29Y5PP6.K5 | 13 | 14 | 15 | 2252 612 ..616 |
| 1000 | ±10 | 8.5 | 5.0 | 3.2 | S102K33Y5PP6.K5 | 13 | 14 | 15 | 2252 612 ..026 |
| 1500 | ±10 | 10.0 | 5.0 | 3.2 | S152K39Y5PP6.K5 | 13 | 14 | 15 | 2252 612 ..126 |
| 2200 | ±10 | 11.0 | 5.0 | 3.2 | S222K43Y5PP6.K5 | 13 | 14 | 15 | 2252 612 ..226 |
| 3300 | ±10 | 12.0 | 7.5 | 4.0 | S332K53Y5PP63K7 | – | – | 37 | 2252 612 ..326 |
| 4700 | ±10 | 17.5 | 7.5 | 4.0 | S472K69Y5PP63K7 | – | – | 37 | 2252 612 ..426 |
| **Class 2 Z5U** | | | | | | | | | |
| 1000 | ±20 | 7.5 | 5.0 | 3.2 | S102M29Z5UP6.K5 | 13 | 14 | 15 | 2252 642 ..027 |
| 1500 | ±20 | 7.5 | 5.0 | 3.2 | S152M29Z5UP6.K5 | 13 | 14 | 15 | 2252 642 ..127 |
| 2200 | ±20 | 8.5 | 5.0 | 3.2 | S222M33Z5UP6.K5 | 13 | 14 | 15 | 2252 642 ..227 |
| 3300 | ±20 | 10.0 | 5.0 | 3.2 | S332M39Z5UP6.K5 | 13 | 14 | 15 | 2252 642 ..327 |
| 4700 | ±20 | 12.0 | 7.5 | 4.0 | S472M47Z5UP63K7 | – | – | 37 | 2252 642 ..427 |
| 6800 | ±20 | 15.0 | 7.5 | 4.0 | S682M59Z5UP63K7 | – | – | 37 | 2252 642 ..627 |
| 10000 | ±20 | 17.5 | 7.5 | 4.0 | S103M69Z5UP63K7 | – | – | 37 | 2252 642 ..037 |

**Notes**

1. Maximum thickness 5.0 mm.
2. SH = seated height.
3. Packaging codes refer to outward kinked leads. Other styles available on request.
4. 8th and 9th digit of the catalogue number to be completed with the packaging code.

**Table 4 2 kV (DC), flanged**; capacitance, mechanical dimensions and ordering information; note 1

| C (pF) | TOL. (%) | $D_{max}$ (mm) | LEAD SPACING F (mm) | SH[2] (mm) | CLEAR TEXT CODE | PACKAGING CODE 8th AND 9th DIGIT[3] | | | CATALOGUE NUMBER[4] |
|---|---|---|---|---|---|---|---|---|---|
| | | | FLANGED | | 12th AND 13th DIGIT: WG = REEL; WJ = AMMO; WF = BULK | REEL | AMMO | BULK | FLANGED |
| **Class 1 SL0** | | | | | | | | | |
| 10 | ±5 | 7 | 5.0 | 10 | D100J28SL0P..AP | 13 | 14 | 15 | 2251 562 ..005 |
| 12 | ±5 | 7 | 5.0 | 10 | D120J28SL0P..AP | 13 | 14 | 15 | 2251 562 ..055 |
| 15 | ±5 | 7 | 5.0 | 10 | D150J28SL0P..AP | 13 | 14 | 15 | 2251 562 ..105 |
| 18 | ±5 | 7 | 5.0 | 10 | D180J28SL0P..AP | 13 | 14 | 15 | 2251 562 ..155 |
| 22 | ±5 | 7 | 5.0 | 10 | D220J28SL0P..AP | 13 | 14 | 15 | 2251 562 ..205 |
| 27 | ±5 | 7 | 5.0 | 10 | D270J28SL0P..AP | 13 | 14 | 15 | 2251 562 ..255 |
| 33 | ±5 | 7 | 5.0 | 10 | D330J28SL0P..AP | 13 | 14 | 15 | 2251 562 ..305 |
| 39 | ±5 | 8 | 5.0 | 11 | D390J31SL0P..AP | 13 | 14 | 15 | 2251 562 ..355 |
| 47 | ±5 | 8 | 5.0 | 11 | D470J31SL0P..AP | 13 | 14 | 15 | 2251 562 ..405 |
| 56 | ±5 | 8 | 5.0 | 11 | D560J31SL0P..AP | 13 | 14 | 15 | 2251 562 ..505 |
| 68 | ±5 | 9 | 5.0 | 12 | D680J35SL0P..AP | 13 | 14 | 15 | 2251 562 ..605 |
| 82 | ±5 | 9 | 5.0 | 12 | D820J35SL0P..AP | 13 | 14 | 15 | 2251 562 ..805 |
| 100 | ±5 | 10 | 5.0 | 13 | D101J39SL0P..AP | 13 | 14 | 15 | 2251 562 ..015 |
| 120 | ±5 | 10 | 5.0 | 13 | D121J39SL0P..AP | 13 | 14 | 15 | 2251 562 ..065 |
| 150 | ±5 | 11 | 5.0 | 14 | D151J43SL0P..AP | 13 | 14 | 15 | 2251 562 ..115 |
| 180 | ±5 | 11 | 5.0 | 14 | D181J43SL0P..AP | 13 | 14 | 15 | 2251 562 ..165 |
| **Class 2 Y5P** | | | | | | | | | |
| 100 | ±10 | 7 | 5.0 | 10 | D101K28Y5PP..SP | 13 | 14 | 15 | 2251 612 ..016 |
| 120 | ±10 | 7 | 5.0 | 10 | D121K28Y5PP..SP | 13 | 14 | 15 | 2251 612 ..066 |
| 150 | ±10 | 7 | 5.0 | 10 | D151K28Y5PP..SP | 13 | 14 | 15 | 2251 612 ..116 |
| 180 | ±10 | 7 | 5.0 | 10 | D181K28Y5PP..SP | 13 | 14 | 15 | 2251 612 ..166 |
| 220 | ±10 | 7 | 5.0 | 10 | D221K28Y5PP..SP | 13 | 14 | 15 | 2251 612 ..216 |
| 270 | ±10 | 7 | 5.0 | 10 | D271K28Y5PP..SP | 13 | 14 | 15 | 2251 612 ..266 |
| 330 | ±10 | 7 | 5.0 | 10 | D331K28Y5PP..SP | 13 | 14 | 15 | 2251 612 ..316 |
| 390 | ±10 | 7 | 5.0 | 10 | D391K28Y5PP..SP | 13 | 14 | 15 | 2251 612 ..366 |
| 470 | ±10 | 7 | 5.0 | 10 | D471K28Y5PP..SP | 13 | 14 | 15 | 2251 612 ..416 |
| 560 | ±10 | 8 | 5.0 | 11 | D561K31Y5PP..SP | 13 | 14 | 15 | 2251 612 ..516 |
| 680 | ±10 | 8 | 5.0 | 11 | D681K31Y5PP..SP | 13 | 14 | 15 | 2251 612 ..616 |
| 820 | ±10 | 9 | 5.0 | 12 | D821K35Y5PP..SP | 13 | 14 | 15 | 2251 612 ..816 |

| C (pF) | TOL. (%) | $D_{max}$ (mm) | LEAD SPACING F (mm) | SH[2] (mm) | CLEAR TEXT CODE | PACKAGING CODE 8th AND 9th DIGIT[3] | | | CATALOGUE NUMBER[4] |
|---|---|---|---|---|---|---|---|---|---|
| | | | FLANGED | | 12th AND 13th DIGIT: WG = REEL; WJ = AMMO; WF = BULK | REEL | AMMO | BULK | FLANGED |
| 1000 | ±10 | 9 | 5.0 | 12 | D102K39Y5PP..SP | 13 | 14 | 15 | 2251 612 ..026 |
| 1200 | ±10 | 10 | 5.0 | 14 | D122K43Y5PP..SP | 13 | 14 | 15 | 2251 612 ..076 |
| 1500 | ±10 | 10 | 5.0 | 14 | D152K43Y5PP..SP | 13 | 14 | 15 | 2251 612 ..126 |
| 1800 | ±10 | 11 | 5.0 | 14 | D182K43Y5PP..SP | 13 | 14 | 15 | 2251 612 ..176 |
| 2200 | ±10 | 11 | 5.0 | 15 | D222K47Y5PP..SP | 13 | 14 | 15 | 2251 612 ..226 |
| **Class 2 Z5U** | | | | | | | | | |
| 1000 | ±20 | 8 | 5.0 | 11 | D102M31Z5UP..SP | 13 | 14 | 15 | 2251 642 ..027 |
| 1500 | ±20 | 8 | 5.0 | 12 | D152M35Z5UP..SP | 13 | 14 | 15 | 2251 642 ..127 |
| 2200 | ±20 | 9 | 5.0 | 13 | D222M39Z5UP..SP | 13 | 14 | 15 | 2251 642 ..227 |
| 3300 | ±20 | 10 | 5.0 | 16 | D332M47Z5UP..SP | 13 | 14 | 15 | 2251 642 ..327 |

**Notes**

1. Maximum thickness 4.5 mm.
2. SH = seated height.
3. Packaging codes refer to flanged leads. Other styles available on request.
4. 8th and 9th digit of the catalogue number to be completed with the packaging code.

**Table 5** **3 kV (DC), kinked**; capacitance, mechanical dimensions and ordering information; note 1

| C (pF) | TOL. (%) | $D_{max}$ (mm) | LEAD SPACING F (mm) | SEATED HEIGHT (mm) | CLEAR TEXT CODE | CATALOGUE NUMBER[2] |
|---|---|---|---|---|---|---|
| | | | KINKED | | | KINKED[3] |
| **Class 1 SL0** | | | | | | |
| 10 | ±10 | 8.5 | 7.5 | 4.0 | S100K33SL0R63K7 | 2252 563 37006 |
| 15 | ±10 | 8.5 | 7.5 | 4.0 | S150K33SL0R63K7 | 2252 563 37106 |
| 22 | ±10 | 8.5 | 7.5 | 4.0 | S220K33SL0R63K7 | 2252 563 37206 |
| 33 | ±10 | 8.5 | 7.5 | 4.0 | S330K33SL0R63K7 | 2252 563 37306 |
| 47 | ±10 | 10.0 | 7.5 | 4.0 | S470K39SL0R63K7 | 2252 563 37406 |
| 68 | ±10 | 10.0 | 7.5 | 4.0 | S680K39SL0R63K7 | 2252 563 37606 |
| **Class 2 Y5P** | | | | | | |
| 100 | ±10 | 8.5 | 7.5 | 4.0 | S101K33Y5PR63K7 | 2252 613 37016 |
| 150 | ±10 | 8.5 | 7.5 | 4.0 | S150K33Y5PR63K7 | 2252 613 37116 |
| 220 | ±10 | 8.5 | 7.5 | 4.0 | S221K33Y5PR63K7 | 2252 613 37216 |
| 330 | ±10 | 8.5 | 7.5 | 4.0 | S331K33Y5PR63K7 | 2252 613 37316 |
| 470 | ±10 | 8.5 | 7.5 | 4.0 | S471K33Y5PR63K7 | 2252 613 37416 |
| 680 | ±10 | 10.0 | 7.5 | 4.0 | S681K39Y5PR63K7 | 2252 613 37616 |
| 1000 | ±10 | 11.0 | 7.5 | 4.0 | S102K43Y5PR63K7 | 2252 613 37026 |
| 1500 | ±10 | 13.5 | 7.5 | 4.0 | S152K53Y5PR63K7 | 2252 613 37126 |
| 2200 | ±10 | 15.0 | 7.5 | 4.0 | S222K59Y5PR83K7 | 2252 613 38226 |
| 3300 | ±10 | 17.5 | 7.5 | 4.0 | S332K69Y5PR83K7 | 2252 613 38326 |
| **Class 2 Z5U** | | | | | | |
| 470 | ±20 | 8.5 | 7.5 | 4.0 | S471M33Z5UR63K7 | 2252 643 37417 |
| 680 | ±20 | 8.5 | 7.5 | 4.0 | S681K33Z5UR63K7 | 2252 643 37617 |
| 1000 | ±20 | 8.5 | 7.5 | 4.0 | S102K33Z5UR63K7 | 2252 643 37027 |
| 1500 | ±20 | 10.0 | 7.5 | 4.0 | S152K39Z5UR63K7 | 2252 643 37127 |
| 2200 | ±20 | 11.0 | 7.5 | 4.0 | S222M43Z5UR63K7 | 2252 643 37227 |
| 3300 | ±20 | 13.5 | 7.5 | 4.0 | S332M53Z5UR63K7 | 2252 643 37327 |
| 4700 | ±20 | 15.0 | 7.5 | 4.0 | S472M59Z5UR83K7 | 2252 643 38427 |

**Notes**

1. Maximum thickness 6.0 mm.
2. Packaging codes refer to outward kinked leads. Other styles available on request.
3. All packaged in bulk.

**Table 6 6 kV (DC), straight**; capacitance, mechanical dimensions and ordering information; note 1

| C (pF) | TOL. (%) | $D_{max}$ (mm) | LEAD SPACING F (mm) | SEATED HEIGHT (mm) | CLEAR TEXT CODE | CATALOGUE NUMBER[2] |
|---|---|---|---|---|---|---|
| | | | STRAIGHT | | | STRAIGHT[3] |
| **Class 1 SL0** | | | | | | |
| 10 | ±20 | 15 | 10 | 4.0 | S100M59SL0U83L0 | 2252 564 52007 |
| 15 | ±20 | 15 | 10 | 4.0 | S472M59SL0U83L0 | 2252 564 52107 |
| 22 | ±20 | 15 | 10 | 4.0 | S472M59SL0U83L0 | 2252 564 52207 |
| 33 | ±20 | 15 | 10 | 4.0 | S472M59SL0U83L0 | 2252 564 52307 |
| **Class 1 S3N** | | | | | | |
| 47 | ±20 | 15 | 10 | 4.0 | S470M59S3NU83L0 | 2252 574 52407 |
| 68 | ±20 | 15 | 10 | 4.0 | S680M59S3NU83L0 | 2252 574 52607 |
| 100 | ±20 | 15 | 10 | 4.0 | S101M59S3NU83L0 | 2252 574 52017 |
| 150 | ±20 | 15 | 10 | 4.0 | S151M59S3NU83L0 | 2252 574 52117 |
| **Class 2 Z5U** | | | | | | |
| 220 | ±20 | 15 | 10 | 4.0 | S221M59Z5UU83L0 | 2252 644 52217 |
| 330 | ±20 | 15 | 10 | 4.0 | S331M59Z5UU83L0 | 2252 644 52317 |
| 470 | ±20 | 15 | 10 | 4.0 | S471M59Z5UU83L0 | 2252 644 52417 |
| 680 | ±20 | 15 | 10 | 4.0 | S681M59Z5UU83L0 | 2252 644 52617 |
| 1000 | ±20 | 15 | 10 | 4.0 | S102M59Z5UU83L0 | 2252 644 52027 |
| 1500 | ±20 | 17.5 | 10 | 4.0 | S152M69Z5UU83L0 | 2252 644 52127 |
| 2200 | ±20 | 19 | 10 | 4.0 | S222M75Z5UU83L0 | 2252 644 52227 |

**Notes**

1. Maximum thickness 8.0 mm.
2. Packaging codes refer to straight leads. Other styles available on request.
3. All packaged in bulk.

## ELECTRICAL CHARACTERISTICS

The capacitors meet the essential requirements of *"EIA 198"*. Unless stated otherwise all electrical values apply at an ambient temperature of 25 ±3 °C, at normal atmospheric conditions.

| DESCRIPTION | VALUE | | | |
|---|---|---|---|---|
| | 1 kV | 2 kV | 3 kV | 6 kV |
| Capacitance range: | | | | |
| Class 1, at 1 MHz, 1.2 V (RMS)[1] | 10 to 270 pF | 10 to 180 pF | 10 to 82 pF | 10 to 150 pF |
| Class 2, at 1 kHz, 1 ±0.2 V (RMS) | 100 to 22000 pF | 100 to 10000 pF | 100 to 4700 pF | 180 to 22000 pF |
| Tolerance on capacitance | ±5%, ±10%, ±20% | ±5%, ±10%, ±20% | ±10%, ±20% | ±20% |
| Dielectric strength | 200% of rated voltage | | | |
| Insulation resistance at 500 V (DC) | ≥10000 MΩ | | | |
| Temperature coefficients on capacitance: | | | | |
| Class 1 | SL0 | | | SL0, S3N |
| Class 2 | Y5P, Z5U | | | Z5U |
| Dissipation factor: | | | | |
| Class 1, at 1 MHz, 1.2 V (RMS) C ≤ 30 pF | $\leq 20 \times (10/C + 0.7) \times 10^{-4}$ max. | | | |
| Class 1, at 1 MHz, 1.2 V (RMS) C > 30 pF | $\leq 20 \times 10^{-4}$ | | | |
| Class 2, at 1 kHz, 1 ±0.2 V (RMS) | ≤3.0% | | | |
| Operating temperature range | −30 to +85 °C | | | |

**Note**

1. 1 kHz, 1 ±0.2 V (RMS) for capacitance values higher than 1000 pF.

## PACKAGING

The capacitors are supplied in bulk packaging (cardboard boxes), in tape on reel or in ammopack (see Table 7).

**Table 7** Size codes and packaging quantities

| $D_{max}$ (mm) | SIZE CODE | PACKAGING QUANTITIES | | |
|---|---|---|---|---|
| | | BULK | REEL | AMMO |
| 5.0 (0.20") | 20 | 1000 | 2000 | 1 kV = 2000<br>2 kV = 1500 |
| 6.5 (0.25") | 25 | | | |
| 7.5 (0.29") | 29 | | | |
| 8.5 (0.33") | 33 | | | |
| 10.0 (0.39") | 39 | | | |
| 11.0 (0.43") | 43 | | | |
| 12.0 (0.47") | 47 | 1000 | – | – |
| 13.5 (0.53") | 53 | 500 | – | – |
| 15.0 (0.59") | 59 | | | |
| 17.5 (0.69") | 69 | | | |
| 19.0 (0.75") | 75 | | | |

**Flanged capacitors on tape, lead spacing 5.0 mm (0.2 inch)**

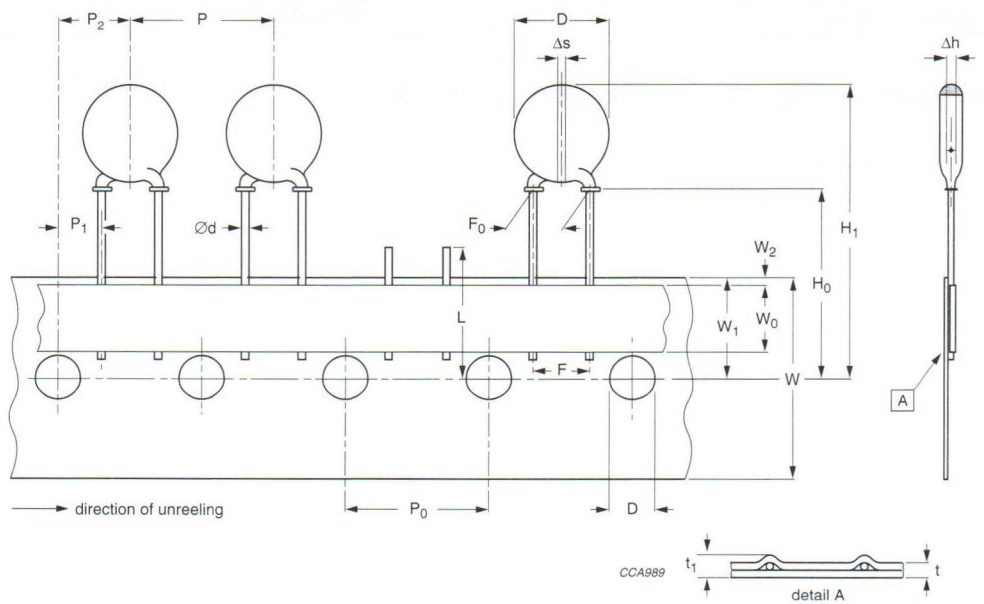


For dimensions see Table 8.

Fig.4 Capacitors, lead spacing 5.0 mm, on tape.

**Table 8** Dimensions of tape; see Fig.4

| SYMBOL | PARAMETER | DIMENSIONS (mm) | |
|---|---|---|---|
| | | NOMINAL | TOLERANCE |
| d | lead diameter | 0.6 | +0.6<br>−0.05 |
| P | pitch between capacitors | 12.7 | ±1.0 |
| $P_0$ | feed-hole pitch | 12.7 | ±0.2; note 1 |
| $P_1$ | feed-hole centre to lead centre | 3.85 | ±0.5; note 2 |
| $P_2$ | feed-hole centre to component centre | 6.35 | ±0.7; note 2 |
| F | lead spacing | 5.0 | +0.6<br>−0.1 |
| $F_0$ | lead-to-lead | 5.08 | +0.5<br>−0.1 |
| $\Delta h$ | component alignment | 0 | ±1.0 |
| $\Delta s$ | deviation along tape, left or right | 0 | ±0.6 |
| W | tape width | 18.0 | ±0.5 |
| $W_0$ | hold-down tape width | 6.0 | ±0.5 |
| $W_1$ | hole position | 9.0 | ±0.5 |
| $W_2$ | hold-down tape position | 0 | ±2 |
| $H_0$ | flange to tape centre | 16.0 | ±0.5 |
| $H_1$ | maximum component height | 28.75 | – |
| | minimum component height | 18.75 | – |
| L | maximum length of snipped lead | 11 | – |
| $D_0$ | feed-hole diameter | 4.0 | ±0.2 |
| t | total tape thickness | 0.65 | ±0.2 |
| $t_1$ | maximum thickness of tape and wires | 1.5 | – |

**Notes**

1. Cumulative pitch error: ±≤1 mm/20 pitches.
2. Obliquity maximum 3°.

REEL AND TAPE DATA

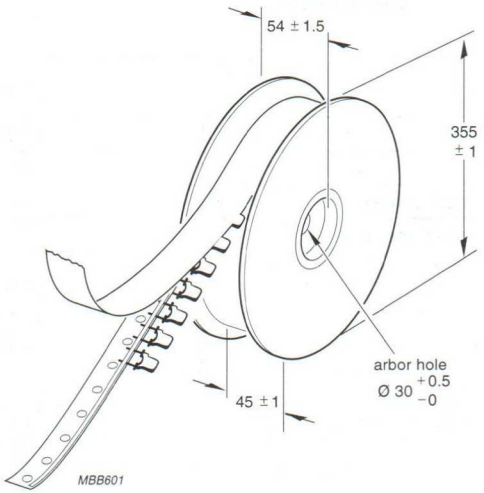


Dimensions in mm.

Fig.5 Reel with capacitors on tape.

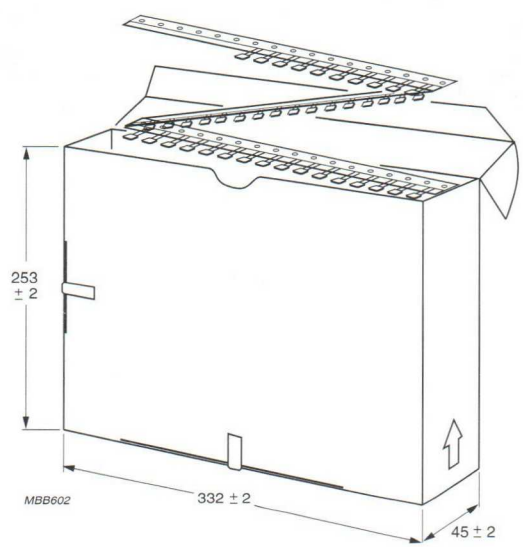


Dimensions in mm.

Fig.6 Ammopack with capacitors on tape.

**Kinked capacitors on tape, lead spacing 5.0 mm (0.2 inch)**

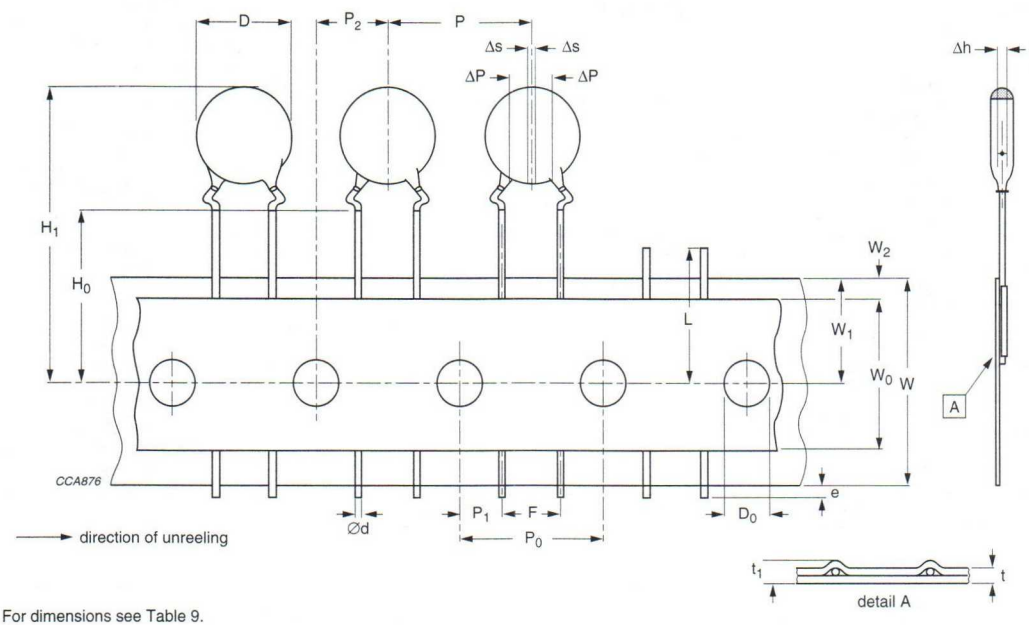


For dimensions see Table 9.

Fig.7 Capacitors, lead spacing 5.0 mm, on tape.

**Table 9** Dimensions of tape; see Fig.7

| SYMBOL | PARAMETER | DIMENSIONS (mm) | |
|---|---|---|---|
| | | NOMINAL | TOLERANCE |
| D | body diameter | 11.0 max. | – |
| d | lead diameter | 0.6 | ±0.05 |
| P | pitch between capacitors | 12.7 | ±1.0 |
| $P_0$ | feed-hole pitch | 12.7 | ±0.3; note 1 |
| ΔP | plane deviation | 1.0 max. | – |
| $P_1$ | feed-hole centre to lead centre | 3.85 | ±0.7; note 2 |
| $P_2$ | feed-hole centre to component centre | 6.35 | ±1.3; note 2 |
| F | lead spacing | 5.0 | +0.6<br>–0.4 |
| Δh | component alignment | 0 | ±1.0 |
| Δs | deviation along tape, left or right | 0 | ±0.6 |
| W | tape width | 18.0 | +1.0<br>–0.5 |
| $W_0$ | hold-down tape width | 5.0 min. | – |
| $W_1$ | hole position | 9.0 | +0.75<br>–0.5 |
| $W_2$ | hold-down tape margin | 3.0 max. | – |
| $H_0$ | height to seating plane | 16.0 | ±0.5 |
| $H_1$ | maximum component height | 32.0 | – |
| e | lead end protrusion | 1.0 max. | – |
| L | maximum length of snipped lead | 11.0 | – |
| $D_0$ | feed-hole diameter | 4.0 | ±0.2 |
| t | total tape thickness | 0.9 max. | – |
| $t_1$ | maximum thickness of tape and wires | 1.5 max. | – |

**Notes**

1. Cumulative pitch error: ±≤1 mm/20 pitches.
2. Obliquity maximum 3°.

REEL AND TAPE DATA

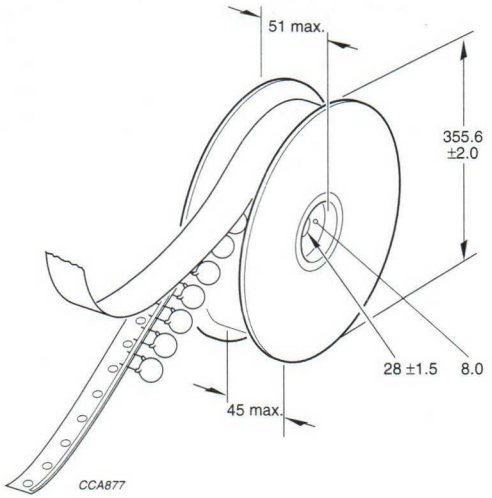


Dimensions in mm.

Fig.8 Reel with capacitors on tape.

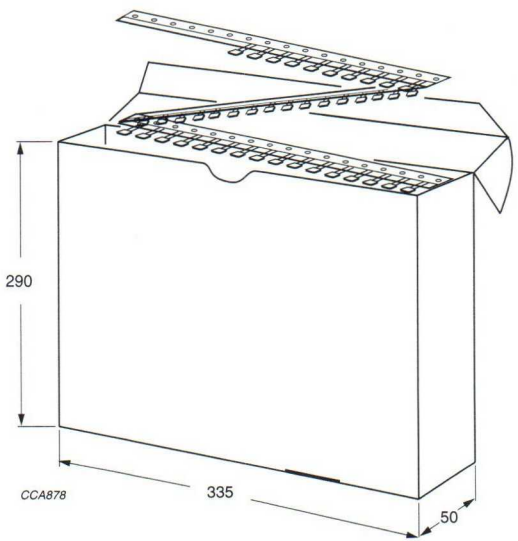


Dimensions in mm.

Fig.9 Ammopack with capacitors on tape.

# Ceramic disc capacitors

## Class 2, low loss (0.5% max.) 1 kV, 2 kV and 3 kV

### FEATURES

- High reliability
- Low losses
- High capacitance in small size
- Kinked (preferred) or straight leads.

### APPLICATIONS

In electronic circuits where low losses and high capacitance per volume are essential, for example:

- SMPS
- HF ballast
- Snubber and high voltage circuits.

### DESCRIPTION

The capacitors consist of a ceramic disc both sides of which are silver-plated. Connection leads are made of tinned copper having a diameter of 0.6 mm or 0.8 mm.

The capacitors may be supplied with outward kinked or straight leads with a lead spacing of 5 mm (0.200"), 7.5 mm (0.300") or 10 mm (0.400") and a lead length from 4 to 30 mm. The standard tolerance on capacitance is ±10%. Encapsulation is made of gold coloured epoxy-resin, flammable resistant in accordance with *"UL94V-0"*.

### QUICK REFERENCE DATA

| DESCRIPTION | VALUE |
|---|---|
| Capacitance range | 100 to 4700 pF |
| Rated DC voltage | 1 kV; 2 kV; 3 kV |
| Dielectric strength | 200% of rated voltage |
| Insulation resistance at 500 V (DC) | ≥10000 MΩ |
| Tolerance on capacitance | ±10%; note 1 |
| Dissipation factor | 0.5% max. |
| Temperature coefficient | Y5P |
| Sectional specifications | IEC 384-9, EIA198 |
| Climatic category | 30/085/21 |

**Note**

1. Other tolerances available on request.

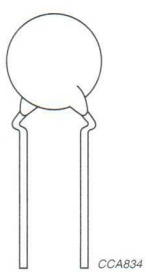


Fig.1 Simplified outline.

# Ceramic disc capacitors

## Class 2, low loss (0.5% max.) 1 kV, 2 kV and 3 kV

### MECHANICAL DATA

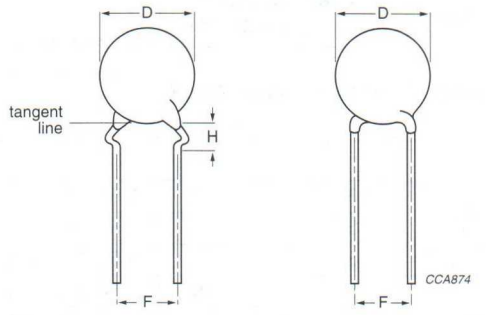


Dimensions in mm.
For dimensions see Tables 1, 2 and 3.

Fig.2 Capacitors with 5 mm (0.20") lead spacing.

### MARKING

Marking indicates capacitance value and tolerance in accordance with *"EIA198"* and voltage marks.

#### Examples of marking code

Disc size ($D_{max}$) ≤6.5 mm:

R101 = low loss 100 pF
2 kV

Disc size ($D_{max}$) ≥7.5 mm:

R102 = low loss 1000 pF
3 kV

## ORDERING INFORMATION (preferred types)

**Table 1 1 kV (DC), kinked**; capacitance, mechanical dimensions and ordering information; note 1

| C (pF) | TOL. (%) | $D_{max}$ (mm) | LEAD SPACING F (mm) | SH[2] (mm) | CLEAR TEXT CODE | PACKAGING CODE 8th AND 9th DIGIT[3] | | | CATALOGUE NUMBER[4] |
|---|---|---|---|---|---|---|---|---|---|
| | | | | | 13th DIGIT: T = REEL; U = AMMO; 3 = BULK | REEL | AMMO | BULK | |
| **Class 2 Y5P** | | | | | | | | | |
| 100 | ±10 | 6.5 | 5.0 | 3.2 | F101K25Y5PN6.K5 | 13 | 14 | 15 | 2252 701 ..016 |
| 150 | ±10 | 6.5 | 5.0 | 3.2 | F151K25Y5PN6.K5 | 13 | 14 | 15 | 2252 701 ..116 |
| 220 | ±10 | 6.5 | 5.0 | 3.2 | F221K25Y5PN6.K5 | 13 | 14 | 15 | 2252 701 ..216 |
| 330 | ±10 | 6.5 | 5.0 | 3.2 | F331K25Y5PN6.K5 | 13 | 14 | 15 | 2252 701 ..316 |
| 470 | ±10 | 7.5 | 5.0 | 3.2 | F471K29Y5PN6.K5 | 13 | 14 | 15 | 2252 701 ..416 |
| 680 | ±10 | 7.5 | 5.0 | 3.2 | F681K29Y5PN6.K5 | 13 | 14 | 15 | 2252 701 ..616 |
| 1000 | ±10 | 8.5 | 5.0 | 3.2 | F102K33Y5PN6.K5 | 13 | 14 | 15 | 2252 701 ..026 |
| 1500 | ±10 | 10.0 | 5.0 | 3.2 | F152K39Y5PN6.K5 | 13 | 14 | 15 | 2252 701 ..126 |
| 2200 | ±10 | 11.0 | 5.0 | 3.2 | F222K43Y5PN6.K5 | 13 | 14 | 15 | 2252 701 ..226 |
| 3300 | ±10 | 15.0 | 7.5 | 4.0 | F332K59Y5PN63K7 | – | – | 37 | 2252 701 ..326 |
| 4700 | ±10 | 17.5 | 7.5 | 4.0 | F472K69Y5PN63K7 | – | – | 37 | 2252 701 ..426 |

**Notes**

1. Maximum thickness 4.5 mm.
2. SH = seated height.
3. Packaging codes refer to outward kinked leads. Other styles available on request.
4. 8th and 9th digit of the catalogue number to be completed with the packaging code.

**Table 2 2 kV (DC), kinked**; capacitance, mechanical dimensions and ordering information; note 1

| C (pF) | TOL. (%) | $D_{max}$ (mm) | LEAD SPACING F (mm) | SH[2] (mm) | CLEAR TEXT CODE | PACKAGING CODE 8th AND 9th DIGIT[3] | | | CATALOGUE NUMBER[4] |
|---|---|---|---|---|---|---|---|---|---|
| | | | | | 13th DIGIT: T = REEL; U = AMMO; 3 = BULK | REEL | AMMO | BULK | |
| **Class 2 Y5P** | | | | | | | | | |
| 100 | ±10 | 6.5 | 5.0 | 3.2 | F101K25Y5PP6.K5 | 13 | 14 | 15 | 2252 702 ..016 |
| 150 | ±10 | 6.5 | 5.0 | 3.2 | F151K25Y5PP6.K5 | 13 | 14 | 15 | 2252 702 ..116 |
| 220 | ±10 | 6.5 | 5.0 | 3.2 | F221K25Y5PP6.K5 | 13 | 14 | 15 | 2252 702 ..216 |
| 330 | ±10 | 7.5 | 5.0 | 3.2 | F331K29Y5PP6.K5 | 13 | 14 | 15 | 2252 702 ..316 |
| 470 | ±10 | 7.5 | 5.0 | 3.2 | F471K29Y5PP6.K5 | 13 | 14 | 15 | 2252 702 ..416 |
| 680 | ±10 | 8.5 | 5.0 | 3.2 | F681K33Y5PP6.K5 | 13 | 14 | 15 | 2252 702 ..616 |
| 1000 | ±10 | 11.0 | 5.0 | 3.2 | F102K43Y5PP6.K5 | 13 | 14 | 15 | 2252 702 ..026 |
| 1500 | ±10 | 12.0 | 7.5 | 4.0 | F152K47Y5PP6.K7 | 35 | 36 | 37 | 2252 702 ..126 |
| 2200 | ±10 | 15.0 | 7.5 | 4.0 | F222K59Y5PP63K7 | – | – | 37 | 2252 702 ..226 |
| 3300 | ±10 | 17.5 | 7.5 | 4.0 | F332K69Y5PP63K7 | – | – | 37 | 2252 702 ..326 |
| 4700 | ±10 | 21.5 | 10.0 | 4.0 | F472K84Y5PP83K0 | – | – | 48 | 2252 702 ..426 |

**Notes**

1. Maximum thickness 5.0 mm.
2. SH = seated height.
3. Packaging codes refer to outward kinked leads. Other styles available on request.
4. 8th and 9th digit of the catalogue number to be completed with the packaging code.

**Table 3 3 kV (DC), kinked; capacitance, mechanical dimensions and ordering information; note 1**

| C (pF) | TOL. (%) | $D_{max}$ (mm) | LEAD[2] SPACING F (mm) | SH[3] (mm) | CLEAR TEXT CODE | PACKAGING CODE 8th AND 9th DIGIT[4] | | | CATALOGUE NUMBER[5] |
|---|---|---|---|---|---|---|---|---|---|
| | | | | | 13th DIGIT: T = REEL; U = AMMO; 3 = BULK | REEL | AMMO | BULK | |
| **Class 2 Y5P** | | | | | | | | | |
| 100 | ±10 | 8.5 | 7.5 | 4.0 | F101K33Y5PR6.K7 | 35 | 36 | 37 | 2252 703 ..016 |
| 150 | ±10 | 8.5 | 7.5 | 4.0 | F151K33Y5PR6.K7 | 35 | 36 | 37 | 2252 703 ..116 |
| 220 | ±10 | 8.5 | 7.5 | 4.0 | F221K33Y5PR6.K7 | 35 | 36 | 37 | 2252 703 ..216 |
| 330 | ±10 | 8.5 | 7.5 | 4.0 | F331K33Y5PR6.K7 | 35 | 36 | 37 | 2252 703 ..316 |
| 470 | ±10 | 8.5 | 7.5 | 4.0 | F471K33Y5PR6.K7 | 35 | 36 | 37 | 2252 703 ..416 |
| 680 | ±10 | 10.0 | 7.5 | 4.0 | F681K39Y5PR6.K7 | 35 | 36 | 37 | 2252 703 ..616 |
| 1000 | ±10 | 11.0 | 7.5 | 4.0 | F102K43Y5PR6.K7 | 35 | 36 | 37 | 2252 703 ..026 |
| 1500 | ±10 | 13.5 | 7.5 | 4.0 | F152K53Y5PR6.K7 | 35 | 36 | 37 | 2252 703 ..126 |
| 2200 | ±10 | 15.0 | 7.5 | 4.0 | F222K59Y5PR83K7 | – | – | 38 | 2252 703 ..226 |
| 2700 | ±10 | 17.5 | 7.5 | 4.0 | F272K69Y5PR83K7 | – | – | 38 | 2252 703 ..276 |

**Notes**

1. Maximum thickness 6.0 mm.
2. Feed-hole pitch $P_0$ = 15 mm.
3. SH = seated height.
4. Packaging codes refer to outward kinked leads. Other styles available on request.
5. 8th and 9th digit of the catalogue number to be completed with the packaging code.

## ELECTRICAL CHARACTERISTICS

The capacitors meet the essential requirements of *"EIA 198"*. Unless stated otherwise all electrical values apply at an ambient temperature of 25 ±3 °C, at normal atmospheric conditions.

| DESCRIPTION | VALUE |
|---|---|
| Capacitance range at 1 kHz, 1 ±0.2 V (RMS) | 100 to 4700 pF |
| Tolerance on capacitance | ±10% |
| Dielectric strength | 200% of rated voltage |
| Insulation resistance after 2 minutes of charging at 500 V (DC) | ≥10000 MΩ min. |
| Temperature coefficient on capacitance | Y5P |
| Dissipation factor at 1 kHz, 1 ±0.2 V (RMS) | 0.5% max. |
| Operating temperature range | −30 to +85 °C |
| Climatic category | 30/085/21 |

## PACKAGING

The capacitors are supplied in bulk packaging (cardboard boxes), in tape on reel or in ammopack (see Table 4).

**Table 4** Disc diameter and packaging quantities

| PARAMETER | | PACKAGING QUANTITIES | | |
|---|---|---|---|---|
| $D_{max}$ (mm) | VOLTAGE | BULK | REEL | AMMO |
| 6.5 to 11.0 | 1 kV | 1000 | 2000 | 2000 |
| 6.5 to 11.0 | 2 kV | 1000 | 2000 | 1500 |
| 12.0 | 1 kV, 2 kV | 1000 | 1500 | 2000 |
| 13.5 | 1 kV, 2 kV | 500 | 1500 | 2000 |
| 13.5 | 3 kV | 500 | 1000 | 1500 |
| 8.5 to 12.0 | 3 kV | 1000 | 1000 | 1500 |
| 15.0 to 21.5 | 1 kV, 2 kV, 3 kV | 500 | – | – |

**Kinked capacitors on tape, lead spacing 5.0 mm (0.2 inch) or 7.5 mm (0.3 inch)**

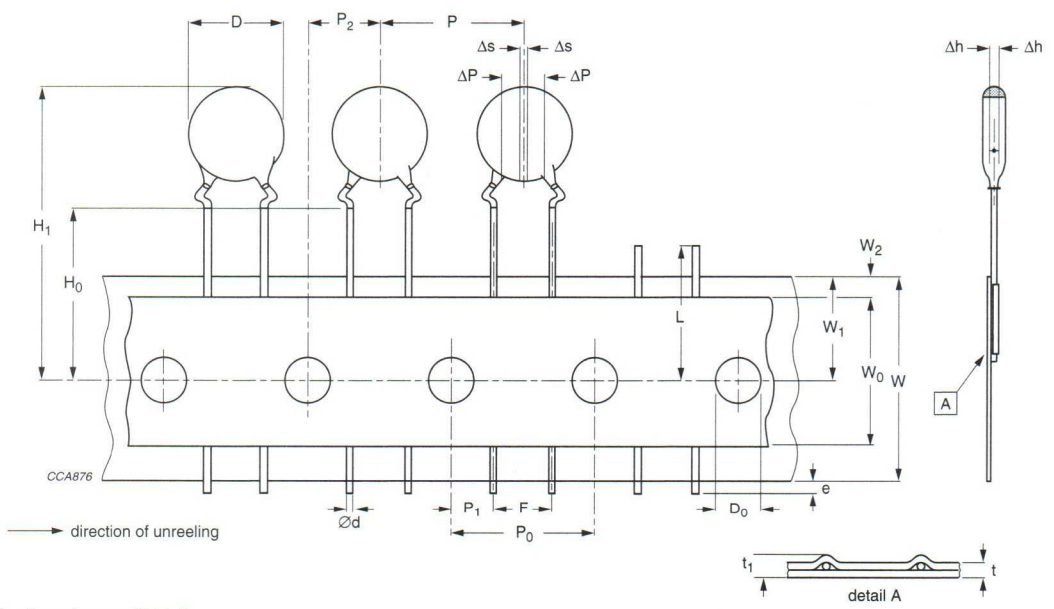


For dimensions see Table 5.

Fig.3 Capacitors, lead spacing 5.0 mm or 7.5 mm, on tape.

**Table 5** Dimensions of tape; see Fig.3

| SYMBOL | PARAMETER | DIMENSIONS (mm) | |
|---|---|---|---|
| | | FEED-HOLE PITCH $P_0$ = 12.7 | FEED-HOLE PITCH $P_0$ = 15.0 |
| D | body diameter | 11.0 max. | 14.0 max. |
| d | lead diameter | 0.6 ±0.05 | 0.6 ±0.05 |
| P | pitch between capacitors | 12.7 ±1.0 | 15.0 ±1.0 |
| $P_0$ | feed-hole pitch | 12.7 ±0.3; note 1 | 15.0 ±0.3; note 1 |
| $\Delta P$ | plane deviation | 1.0 max. | 1.0 max. |
| $P_1$ | feed-hole centre to lead centre | 3.85 ±0.7; note 2 | 3.75 ±1.0; note 2 |
| $P_2$ | feed-hole centre to component centre | 6.35 ±1.3; note 2 | 7.5 ±1.5; note 2 |
| F | lead spacing | 5.0 +0.6/–0.4 | 7.5 ±1.0 |
| $\Delta h$ | component alignment | 0 ±1.0 | 0 ±1.0 |
| $\Delta s$ | deviation along tape, left or right | 0 ±1.0 | 0 ±1.0 |
| W | tape width | 18.0 +1.0/–0.5 | 18.0 +1.0/–0.5 |
| $W_0$ | hold-down tape width | 5.0 min. | 5.0 min. |
| $W_1$ | hole position | 9.0 +0.75/–0.5 | 9.0 +0.75/–0.5 |
| $W_2$ | hold-down tape margin | 3.0 max. | 3.0 max. |
| $H_0$ | height to seating plane | 16.0 ±0.5 | 16.0 ±0.5 |
| $H_1$ | maximum component height | 32.0 | 40.0 |
| e | lead end protrusion | 1.0 max. | 1.0 max. |
| L | maximum length of snipped lead | 11.0 | 11.0 |
| $D_0$ | feed-hole diameter | 4.0 ±0.2 | 4.0 ±0.2 |
| t | total tape thickness | 0.9 max. | 0.9 max. |
| $t_1$ | maximum thickness of tape and wires | 1.5 max. | 1.5 max. |

**Notes**

1. Cumulative pitch error: ±≤1 mm/20 pitches.
2. Obliquity maximum 3°.

REEL AND TAPE DATA

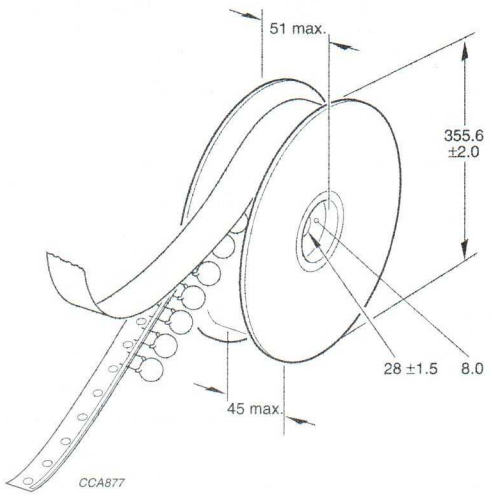


Dimensions in mm.

Fig.4 Reel with capacitors on tape.

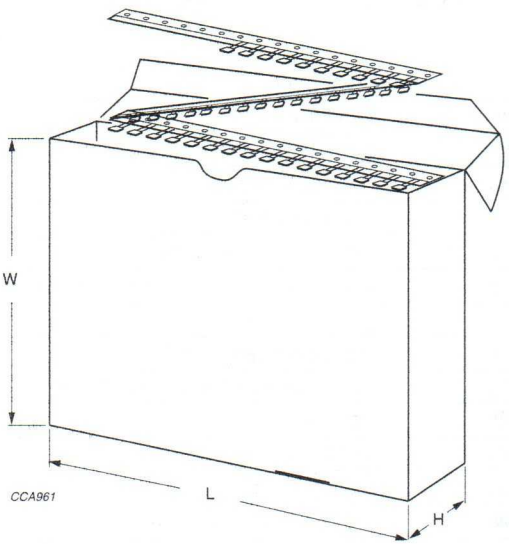


For dimensions, see Table 6.

Fig.5 Ammopack with capacitors on tape.

**Table 6** Dimensions of ammopack for relevant disc size and taping pitch; see Fig.5

| PARAMETER | DISC SIZE ($D_{max}$) | | UNIT |
|---|---|---|---|
| | 6.5 to 11.0 mm | 12.0 to 13.5 mm | |
| Taping pitch | 12.7 | 15.0 | mm |
| L | 335 | 350 | mm |
| W | 290 | 330 | mm |
| H | 50 | 55 | mm |

# Ceramic disc capacitors

## Class 2, low loss (0.2% max.) 1 kV and 2 kV (flanged)

### FEATURES

- High reliability
- Low losses
- High capacitance in small size
- Flanged leads.

### APPLICATIONS

In electronic circuits where low losses and high capacitance per volume are essential, for example:

- SMPS
- HF ballast
- Snubber and high voltage circuits.

### DESCRIPTION

The capacitors consist of a ceramic disc both sides of which are silver-plated. Connection leads are made of tinned copper having a diameter of 0.6 mm.

The capacitors have a lead spacing of 5 mm (0.20") and flanged leads. The flange guarantees that the leads are free of lacquer and its shape allows soldering gasses to escape freely, assuring excellent solder joints. This makes the capacitors suitable for both hand mounting and automatic insertion. Encapsulation is made of epoxy-resin, flammable resistant in accordance with *"UL94V-0"*.

### QUICK REFERENCE DATA

| DESCRIPTION | VALUE |
|---|---|
| Capacitance range | 100 to 2200 pF |
| Rated DC voltage | 1 kV; 2 kV |
| Dielectric strength | 200% of rated voltage |
| Insulation resistance at 500 V (DC) | ≥10000 MΩ |
| Tolerance on capacitance | ±10%; note 1 |
| Dissipation factor | 0.2% max. |
| Temperature coefficient | Y5R (2C4) |
| Sectional specifications | IEC 384-9, EIA198 |
| Climatic category | 30/085/21 |

**Note**

1. Other tolerances available on request.

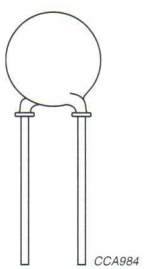


Fig.1 Simplified outline.

## MECHANICAL DATA

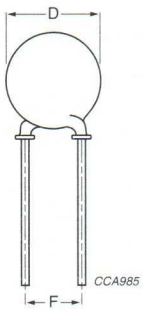


Dimensions in mm.
For dimensions see Tables 1 and 2.

Fig.2 Capacitors with 5 mm (0.20") lead spacing.

## MARKING

Flanged capacitors are marked as follows:

- The body of 1 kV capacitors is tan coloured. The temperature dependency is indicated by a yellow coloured cap.
- The body of 2 kV capacitors is black coloured with no indication of temperature dependency.
- The voltage is marked in clear letters, the low loss characteristics being indicated by the code 'L' marked below the capacitance value.
- Capacitance value is marked on the body in a 3-digit code: two numbers corresponding with the numerical capacitance value and one letter indicating the multiplier and the decimal point.

### Example of marking code

n10 = 100 pF

1n5 = 1500 pF

## ORDERING INFORMATION

**Table 1 1 kV (DC), flanged**; capacitance, mechanical dimensions and ordering information; note 1

| C (pF) | TOL. (%) | $D_{max}$ (mm) | LEAD SPACING F (mm) | SH[2] (mm) | CLEAR TEXT CODE | PACKAGING CODE 8th AND 9th DIGIT | | | CATALOGUE NUMBER[3] |
|---|---|---|---|---|---|---|---|---|---|
| | | | | | 12th AND 13th DIGIT: WG = REEL; WJ = AMMO; WF = BULK | REEL | AMMO | BULK | |
| **Class 2 Y5R** | | | | | | | | | |
| 100 | ±10 | 7 | 5.0 | 10 | D101K28Y5RN..SP | 13 | 14 | 15 | 2251 711 ..016 |
| 120 | ±10 | 7 | 5.0 | 10 | D121K28Y5RN..SP | 13 | 14 | 15 | 2251 711 ..066 |
| 150 | ±10 | 7 | 5.0 | 10 | D151K28Y5RN..SP | 13 | 14 | 15 | 2251 711 ..116 |
| 180 | ±10 | 7 | 5.0 | 10 | D181K28Y5RN..SP | 13 | 14 | 15 | 2251 711 ..166 |
| 220 | ±10 | 7 | 5.0 | 10 | D221K28Y5RN..SP | 13 | 14 | 15 | 2251 711 ..216 |
| 270 | ±10 | 7 | 5.0 | 10 | D271K28Y5RN..SP | 13 | 14 | 15 | 2251 711 ..266 |
| 330 | ±10 | 7 | 5.0 | 10 | D331K28Y5RN..SP | 13 | 14 | 15 | 2251 711 ..316 |
| 390 | ±10 | 7 | 5.0 | 10 | D391K28Y5RN..SP | 13 | 14 | 15 | 2251 711 ..366 |
| 470 | ±10 | 7 | 5.0 | 10 | D471K28Y5RN..SP | 13 | 14 | 15 | 2251 711 ..416 |
| 560 | ±10 | 7 | 5.0 | 10 | D561K28Y5RN..SP | 13 | 14 | 15 | 2251 711 ..516 |
| 680 | ±10 | 7 | 5.0 | 10 | D681K28Y5RN..SP | 13 | 14 | 15 | 2251 711 ..616 |
| 820 | ±10 | 8 | 5.0 | 11 | D821K31Y5RN..SP | 13 | 14 | 15 | 2251 711 ..816 |
| 1000 | ±10 | 8 | 5.0 | 11 | D102K31Y5RN..SP | 13 | 14 | 15 | 2251 711 ..026 |
| 1200 | ±10 | 9 | 5.0 | 12 | D122K35Y5RN..SP | 13 | 14 | 15 | 2251 711 ..076 |
| 1500 | ±10 | 9 | 5.0 | 12 | D152K35Y5RN..SP | 13 | 14 | 15 | 2251 711 ..126 |
| 1800 | ±10 | 9 | 5.0 | 12 | D182K35Y5RN..SP | 13 | 14 | 15 | 2251 711 ..176 |
| 2200 | ±10 | 10 | 5.0 | 13 | D222K39Y5RN..SP | 13 | 14 | 15 | 2251 711 ..226 |

**Notes**

1. Maximum thickness 4.5 mm.
2. SH = seated height.
3. 8th and 9th digit of the catalogue number to be completed with the packaging code.

**Table 2 2 kV (DC), flanged**; capacitance, mechanical dimensions and ordering information; note 1

| C (pF) | TOL. (%) | $D_{max}$ (mm) | LEAD SPACING F (mm) | SH[2] (mm) | CLEAR TEXT CODE | PACKAGING CODE 8th AND 9th DIGIT | | | CATALOGUE NUMBER[3] |
|---|---|---|---|---|---|---|---|---|---|
| | | | | | 12th AND 13th DIGIT: WG = REEL; WJ = AMMO; WF = BULK | REEL | AMMO | BULK | |
| **Class 2 Y5R** | | | | | | | | | |
| 100 | ±10 | 7 | 5.0 | 10 | D101K28Y5RP..SP | 13 | 14 | 15 | 2251 712 ..016 |
| 120 | ±10 | 7 | 5.0 | 10 | D121K28Y5RP..SP | 13 | 14 | 15 | 2251 712 ..066 |
| 150 | ±10 | 7 | 5.0 | 10 | D151K28Y5RP..SP | 13 | 14 | 15 | 2251 712 ..116 |
| 180 | ±10 | 7 | 5.0 | 10 | D181K28Y5RP..SP | 13 | 14 | 15 | 2251 712 ..166 |
| 220 | ±10 | 7 | 5.0 | 10 | D221K28Y5RP..SP | 13 | 14 | 15 | 2251 712 ..216 |
| 270 | ±10 | 7 | 5.0 | 10 | D271K28Y5RP..SP | 13 | 14 | 15 | 2251 712 ..266 |
| 330 | ±10 | 7 | 5.0 | 10 | D331K28Y5RP..SP | 13 | 14 | 15 | 2251 712 ..316 |
| 390 | ±10 | 7 | 5.0 | 10 | D391K28Y5RP..SP | 13 | 14 | 15 | 2251 712 ..366 |
| 470 | ±10 | 8 | 5.0 | 11 | D471K31Y5RP..SP | 13 | 14 | 15 | 2251 712 ..416 |
| 560 | ±10 | 8 | 5.0 | 11 | D561K31Y5RP..SP | 13 | 14 | 15 | 2251 712 ..516 |
| 680 | ±10 | 9 | 5.0 | 12 | D681K35Y5RP..SP | 13 | 14 | 15 | 2251 712 ..616 |
| 820 | ±10 | 10 | 5.0 | 13 | D821K39Y5RP..SP | 13 | 14 | 15 | 2251 712 ..816 |
| 1000 | ±10 | 11 | 5.0 | 14 | D102K43Y5RP..SP | 13 | 14 | 15 | 2251 712 ..026 |

**Notes**

1. Maximum thickness 4.5 mm.
2. SH = seated height.
3. 8th and 9th digit of the catalogue number to be completed with the packaging code.

## ELECTRICAL CHARACTERISTICS

The capacitors meet the essential requirements of *"IEC 384-9 and EIA 198"*. Unless stated otherwise all electrical values apply at an ambient temperature of 25 ±3 °C, at normal atmospheric conditions.

| DESCRIPTION | VALUE | |
|---|---|---|
| | 1 kV | 2 kV |
| Capacitance range at 1 kHz, 1 ±0.2 V (RMS) | 100 to 2200 pF | 100 to 1000 pF |
| Tolerance on capacitance | ±10% | ±10% |
| DC test voltage, duration 1 minute | 1 kV | 2 kV |
| Insulation resistance at 500 V (DC) | ≥10000 MΩ min. | |
| Temperature coefficient on capacitance | Y5R (2C4) | |
| Dissipation factor at 1 kHz, 1 ±0.2 V (RMS) | 0.2% max. | |
| Operating temperature range | −30 to +85 °C | |
| Climatic category | 30/085/21 | |

## PACKAGING

The capacitors are supplied in bulk packaging (cardboard boxes), in tape on reel or in ammopack (see Table 3).

**Table 3** Packaging quantities

| BULK | REEL | AMMOPACK |
|---|---|---|
| 500 | 2000 | 2000 |

**Flanged capacitors on tape, lead pitch 5.08 mm (0.2 inch)**

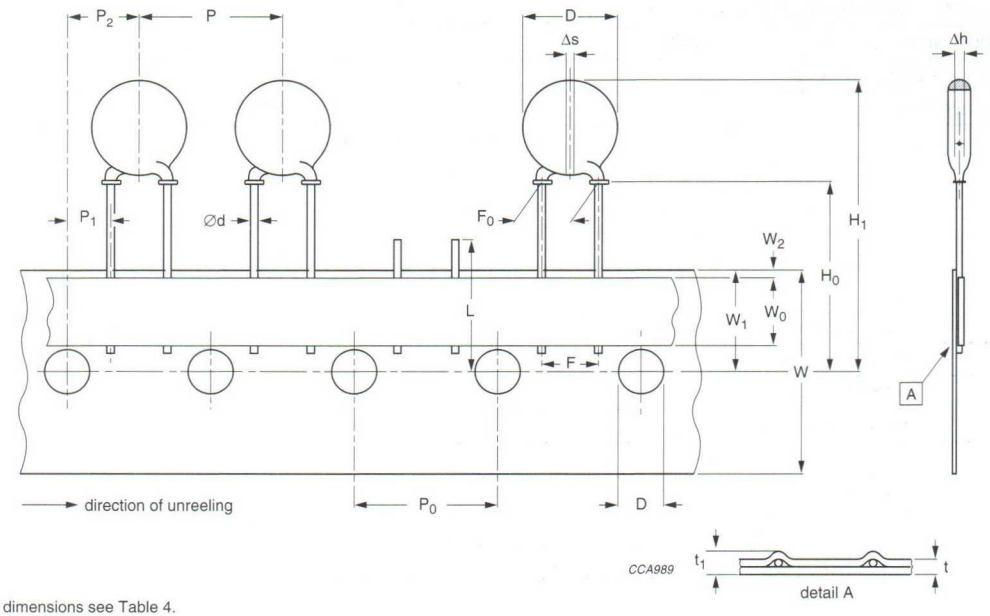


For dimensions see Table 4.

Fig.3 Capacitors, lead pitch 5.08 mm, on tape.

**Table 4** Dimensions of tape; see Fig.3

| SYMBOL | PARAMETER | DIMENSIONS (mm) | |
|---|---|---|---|
| | | NOMINAL | TOLERANCE |
| d | lead diameter | 0.6 | +0.6<br>−0.05 |
| P | pitch between capacitors | 12.7 | ±1.0 |
| $P_0$ | feed-hole pitch | 12.7 | ±0.2; note 1 |
| $P_1$ | feed-hole centre to lead centre | 3.85 | ±0.5; note 2 |
| $P_2$ | feed-hole centre to component centre | 6.35 | ±0.7; note 2 |
| F | lead spacing | 5.0 | +0.6<br>−0.1 |
| $F_0$ | lead-to-lead | 5.08 | +0.5<br>−0.1 |
| $\Delta h$ | component alignment | 0 | ±1.0 |
| $\Delta s$ | deviation along tape, left or right | 0 | ±0.6 |
| W | tape width | 18.0 | ±0.5 |
| $W_0$ | hold-down tape width | 6.0 | ±0.5 |
| $W_1$ | hole position | 9.0 | ±0.5 |
| $W_2$ | hold-down tape position | 0 | ±2 |
| $H_0$ | flange to tape centre | 16.0 | ±0.5 |
| $H_1$ | maximum component height | 33.75 | – |
| | minimum component height | 18.75 | – |
| L | maximum length of snipped lead | 11 | – |
| $D_0$ | feed-hole diameter | 4.0 | ±0.2 |
| t | total tape thickness | 0.65 | ±0.2 |
| $t_1$ | maximum thickness of tape and wires | 1.5 | – |

**Notes**

1. Cumulative pitch error: ±≤1 mm/20 pitches.
2. Obliquity maximum 3°.

REEL AND TAPE DATA

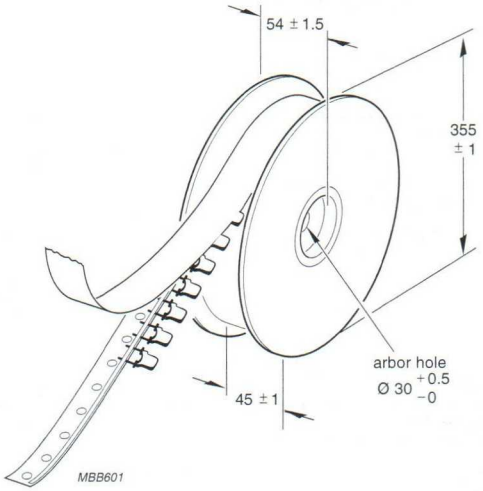


Dimensions in mm.

Fig.4 Reel with capacitors on tape.

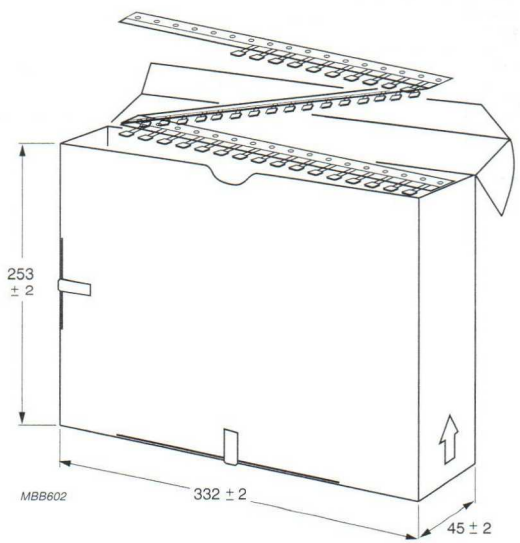


Dimensions in mm.

Fig.5 Ammopack with capacitors on tape.

# Ceramic disc capacitors

# Class X1/Y2, 250 V (AC) safety (kinked or straight)

## FEATURES

- Complying with *"EN 132 400"* and *"IEC 384-14, 2nd edition, including amendment 1.1995"*
- High reliability
- Kinked (preferred) or straight leads.

## APPLICATIONS

- Across-the-line
- Line by-pass
- Antenna coupling.

## DESCRIPTION

The capacitors consist of a ceramic disc both sides of which are silver-plated. Connection leads are made of tinned copper having a diameter of 0.6 mm or 0.8 mm.

The capacitors may be supplied with kinked or straight leads having a lead spacing of 7.5 mm (0.300") or 10 mm (0.400") and a lead length from 4 to 30 mm. The standard tolerance on capacitance is ±10% for Y5P material and ±20% for Z5U material. Encapsulation is made of flammable resistant epoxy resin in accordance with *"UL94V-0"*.

## QUICK REFERENCE DATA

| DESCRIPTION | VALUE |
|---|---|
| Capacitance range at 1 kHz; 1 V (RMS) | 100 to 10000 pF |
| Rated AC voltage | 250 V; 50/60 Hz |
| Dielectric strength | 2500 V (AC) for 60 s |
| Insulation resistance at 500 V (DC) | ≥10000 MΩ |
| Tolerance on capacitance | ±10%; ±20% |
| Dissipation factor at 1 kHz; 1 V (RMS) | 2.5% max. |
| Temperature coefficients | Y5P; Z5U |
| Operating temperature range | −30 to +85 °C; +10 to +85 °C |
| Approvals | FIMKO, DEMKO, SEMKO, NEMKO, SEV, VDE (UL, CSA in progress) |
| Climatic category | 25/85/21 |

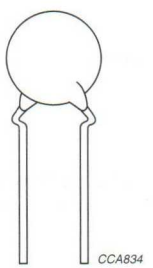


Fig.1 Simplified outline.

## MECHANICAL DATA

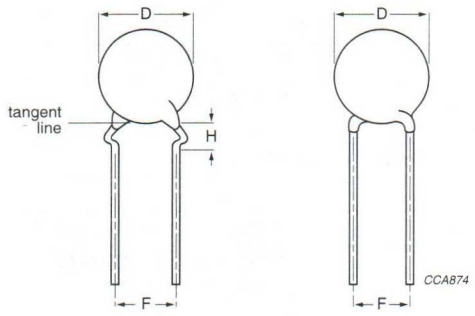


Dimensions in mm.
For dimensions see Table 1.

Fig.2 Capacitors with 7.5 mm (0.30") lead spacing.

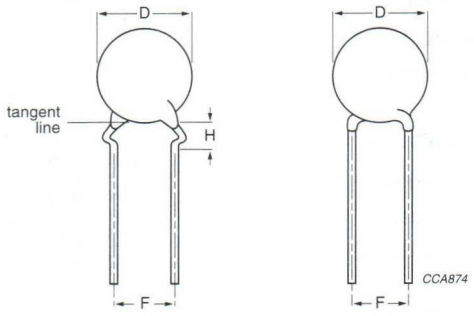


Dimensions in mm.
For dimensions see Table 1.

Fig.3 Capacitors with 10 mm (0.40") lead spacing.

## MARKING

Marking indicates capacitance value and tolerance in accordance with *"EIA198"*, voltage and approval marks.

## ORDERING INFORMATION, TYPE DN

**Table 1** **250 V (AC)**; capacitance, mechanical dimensions and ordering information; note 1

| C (pF) | TOL. (%) | $D_{max}$ (mm) | LEAD SPACING F (mm) | SH[2] (mm) | CLEAR TEXT CODE | PACKAGING CODE 8th AND 9th DIGIT | | | CATALOGUE NUMBER[4] |
|---|---|---|---|---|---|---|---|---|---|
| | | | | | 13th DIGIT: T = REEL; U = AMMO; 3 = BULK; note 3 | REEL | AMMO | BULK | |
| | | | | | | KINKED | | STRAIGHT | |
| **Class X1/Y2 Y5P** | | | | | | | | | |
| 100 | ±10 | 8.5 | 7.5 | 4.0 | S101K33Y5PS6.K7 | 35 | 36 | 41 | 2252 812 ..016 |
| 150 | ±10 | 8.5 | 7.5 | 4.0 | S151K33Y5PS6.K7 | 35 | 36 | 41 | 2252 812 ..116 |
| 220 | ±10 | 8.5 | 7.5 | 4.0 | S221K33Y5PS6.K7 | 35 | 36 | 41 | 2252 812 ..216 |
| 330 | ±10 | 8.5 | 7.5 | 4.0 | S331K33Y5PS6.K7 | 35 | 36 | 41 | 2252 812 ..316 |
| 470 | ±10 | 8.5 | 7.5 | 4.0 | S471K33Y5PS6.K7 | 35 | 36 | 41 | 2252 812 ..416 |
| 680 | ±10 | 10.0 | 7.5 | 4.0 | S681K39Y5PS6.K7 | 35 | 36 | 41 | 2252 812 ..616 |
| **Class X1/Y2 Z5U** | | | | | | | | | |
| 1000 | ±20 | 8.5 | 7.5 | 4.0 | S102M33Z5US6.K7 | 35 | 36 | 41 | 2252 812 ..027 |
| 1500 | ±20 | 10.0 | 7.5 | 4.0 | S152M39Z5US6.K7 | 35 | 36 | 41 | 2252 812 ..127 |
| 2200 | ±20 | 11.0 | 7.5 | 4.0 | S222M43Z5US6.K7 | 35 | 36 | 41 | 2252 812 ..227 |
| 3300 | ±20 | 13.5 | 7.5 | 4.0 | S332M53Z5US6.K7 | 35 | 36 | 41 | 2252 812 ..327 |
| 3900 | ±20 | 13.5 | 7.5 | 4.0 | S392M53Z5US6.K7 | 35 | 36 | 41 | 2252 812 ..377 |
| 4700 | ±20 | 15.0 | 10 | 4.0 | S472M59Z5US83L0 | – | – | 52 | 2252 812 ..427 |
| 10000 | ±20 | 21.5 | 10 | 4.0 | S103M84Z5US83L0 | – | – | 52 | 2252 812 ..037 |

**Notes**

1. Maximum thickness 4.5 mm.
2. SH = seated height.
3. Replace 14th digit (K) with an (L) for straight leads in bulk.
4. 8th and 9th digit of the catalogue number to be completed with the packaging code.

## ELECTRICAL CHARACTERISTICS

The capacitors meet the essential requirements of *"EIA198"*. Unless stated otherwise all electrical values apply at an ambient temperature of 25 ±3 °C, at normal atmospheric conditions.

| DESCRIPTION | VALUE |
|---|---|
| Capacitance range at 1 kHz, 1 V (RMS) | 100 to 10000 pF |
| Tolerance on capacitance | ±10%, ±20% |
| Rated AC voltage | 250 V |
| AC test voltage | 2500 V |
| Insulation resistance at 500 V (DC) | ≥10000 MΩ |
| Temperature coefficients on capacitance | Y5P; Z5U |
| Dissipation factor at 1 kHz, 1 V (RMS) | 2.5% max. |
| Operating temperature range | +10 to +85 °C (Z5U); –30 to +85 °C (Y5P) |

## PACKAGING

The capacitors are supplied in bulk packaging (cardboard boxes), in tape on reel or in ammopack (see Table 2).

**Table 2** Size codes and packaging quantities

| $D_{max}$ (mm) | SIZE CODE | PACKAGING QUANTITIES | | |
|---|---|---|---|---|
| | | BULK | REEL | AMMO |
| 8.5 (0.33") | 33 | 1000 | 1000 | 1500 |
| 10.0 (0.39") | 39 | | | |
| 11.0 (0.43") | 43 | | | |
| 12.0 (0.47") | 47 | | | |
| 13.5 (0.53") | 53 | 500 | – | – |
| 15.0 (0.59") | 59 | | | |
| 17.5 (0.69") | 69 | | | |
| 19.0 (0.75") | 75 | | | |
| 21.5 (0.84") | 84 | | | |

**Kinked capacitors on tape, lead spacing 7.5 mm (0.30 inch)**

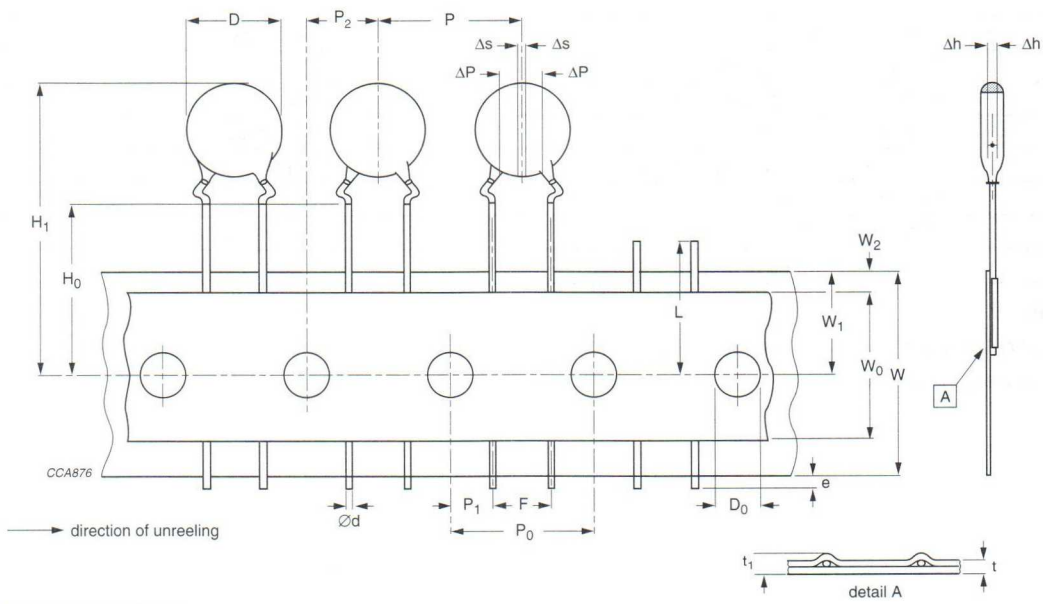


For dimensions see Table 3.

Fig.4 Capacitors, lead spacing 7.5 mm, on tape.

**Table 3** Dimensions of tape; see Fig.4

| SYMBOL | PARAMETER | DIMENSIONS (mm) | |
|---|---|---|---|
| | | NOMINAL | TOLERANCE |
| D | body diameter | 14.0 max. | – |
| d | lead diameter | 0.6 | ±0.05 |
| P | pitch between capacitors | 15 | ±1.0 |
| $P_0$ | feed-hole pitch | 15 | ±0.3; note 1 |
| ΔP | plane deviation | 1.0 max. | – |
| $P_1$ | feed-hole centre to lead centre | 3.75 | ±0.7; note 2 |
| $P_2$ | feed-hole centre to component centre | 7.5 | ±1.3; note 2 |
| F | lead spacing | 7.5 | ±1.0 |
| Δh | component alignment | 0 | ±1.0 |
| Δs | deviation along tape, left or right | 0 | ±1.0 |
| W | tape width | 18.0 | +1.0<br>−0.5 |
| $W_0$ | hold-down tape width | 5.0 min. | – |
| $W_1$ | hole position | 9.0 | +0.75<br>−0.5 |
| $W_2$ | hold-down tape margin | 3.0 max. | – |
| $H_0$ | height to seating plane | 16.0 | ±0.5 |
| $H_1$ | maximum component height | 40 | – |
| e | lead end protrusion | 1.0 max. | – |
| L | maximum length of snipped lead | 11.0 | – |
| $D_0$ | feed-hole diameter | 4.0 | ±0.2 |
| t | total tape thickness | 0.9 max. | – |
| $t_1$ | maximum thickness of tape and wires | 1.5 max. | – |

**Notes**

1. Cumulative pitch error: ±≤1 mm/20 pitches.
2. Obliquity maximum 3°.

REEL AND TAPE DATA

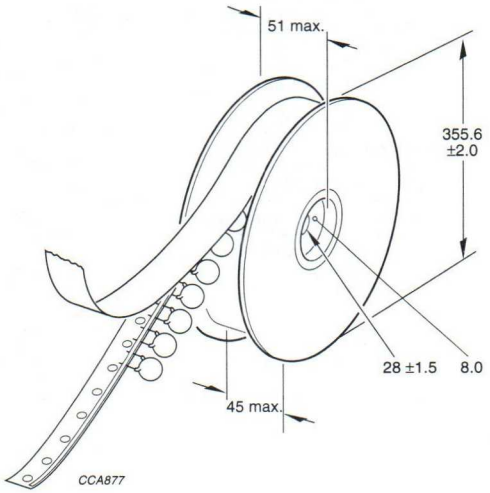


Dimensions in mm.

Fig.5 Reel with capacitors on tape.

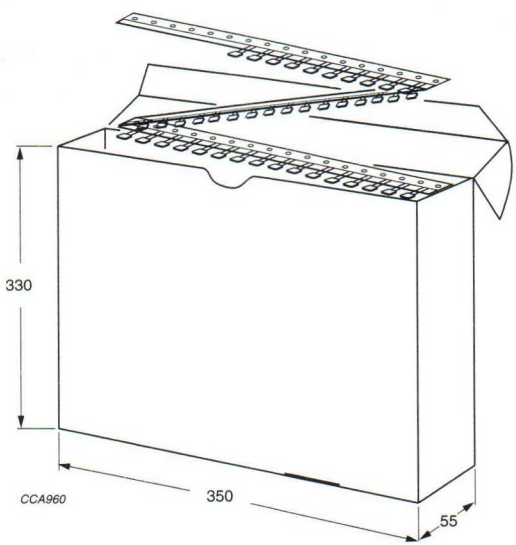


Dimensions in mm.

Fig.6 Ammopack with capacitors on tape.

# Ceramic disc capacitors

# Class Y2, 250 V (AC) safety (flanged)

## FEATURES

- Complying with *"EN 132 400"* and *"IEC 384-14, 2nd edition, including amendment 1.1995"*
- High reliability
- Flanged leads.

## APPLICATIONS

- Across-the-line
- Line by-pass
- Antenna coupling.

## DESCRIPTION

The capacitors consist of a ceramic disc both sides of which are silver-plated. Connection leads are made of tinned copper having a diameter of 0.5 mm or 0.6 mm.

The capacitors are supplied with flanged leads having a lead spacing of 5 mm (0.200") and a lead length from 4 to 13 mm. The standard tolerance on capacitance is ±10% for Y5P material and ±20% for Y5U material. Encapsulation is made of flammable resistant epoxy resin in accordance with *"UL94V-0"*.

## QUICK REFERENCE DATA

| DESCRIPTION | VALUE |
|---|---|
| Capacitance range at 1 kHz; 1 V (RMS) | 100 to 2200 pF |
| Rated AC voltage | 250 V; 50/60 Hz |
| Dielectric strength | 2500 V (AC) for 60 s |
| Insulation resistance at 500 V (DC) | ≥10000 MΩ |
| Tolerance on capacitance | ±10%; ±20% |
| Dissipation factor at 1 kHz; 1 V (RMS) | 2.5% max. |
| Temperature coefficients | Y5P; Y5U |
| Operating temperature range | −30 to +85 °C |
| Approvals | FIMKO, DEMKO, NEMKO, SEV, VDE (UL, CSA in progress) |
| Climatic category | 25/85/21 |

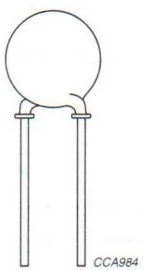


Fig.1 Simplified outline.

## MECHANICAL DATA

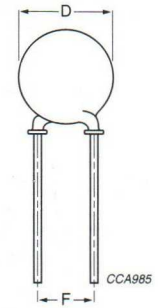


Dimensions in mm.
For dimensions see Table 1.

Fig.2 Capacitor with 5 mm (0.20") lead spacing.

## MARKING

Marking indicates capacitance value, the series, subclass, voltage and approval marks.

### Marking example

M-Y2

1N0

250 V (AC)

## ORDERING INFORMATION

**Table 1 250 V (AC), flanged**; capacitance, mechanical dimensions and ordering information; note 1

| C (pF) | TOL. (%) | $D_{max}$ (mm) | LEAD SPACING F (mm) | SH[2] (mm) | CLEAR TEXT CODE | PACKAGING CODE 8th AND 9th DIGIT | | | CATALOGUE NUMBER[3] |
|---|---|---|---|---|---|---|---|---|---|
| | | | | | 12th AND 13th DIGIT: WG = REEL; WJ = AMMO; WF = BULK | REEL | AMMO | BULK | |
| **Class Y2 Y5P** | | | | | | | | | |
| 100 | ±10 | 8 | 5 | 11 | D101K31Y5PQ..SP | 13 | 14 | 15 | 2251 817 ..016 |
| 150 | ±10 | 8 | 5 | 11 | D151K31Y5PQ..SP | 13 | 14 | 15 | 2251 817 ..116 |
| 220 | ±10 | 8 | 5 | 11 | D221K31Y5PQ..SP | 13 | 14 | 15 | 2251 817 ..216 |
| 330 | ±10 | 8 | 5 | 11 | D331K31Y5PQ..SP | 13 | 14 | 15 | 2251 817 ..316 |
| 470 | ±10 | 8 | 5 | 11 | D471K31Y5PQ..SP | 13 | 14 | 15 | 2251 817 ..416 |
| **Class Y2 Y5U** | | | | | | | | | |
| 680 | ±20 | 9 | 5 | 12 | D681M35Y5UQ..SP | 13 | 14 | 15 | 2251 817 ..617 |
| 1000 | ±20 | 9 | 5 | 12 | D102M35Y5UQ..SP | 13 | 14 | 15 | 2251 817 ..027 |
| 1500 | ±20 | 9 | 5 | 12 | D152M35Y5UQ..SP | 13 | 14 | 15 | 2251 817 ..127 |
| 2200 | ±20 | 11 | 5 | 14 | D222M43Y5UQ..SP | 13 | 14 | 15 | 2251 817 ..227 |

**Notes**

1. Maximum thickness 4.5 mm.
2. SH = seated height.
3. 8th and 9th digit of the catalogue number to be completed with the packaging code.

## ELECTRICAL CHARACTERISTICS

The capacitors meet the essential requirements of *"IEC 384-14, 2nd edition"*. Unless stated otherwise all electrical values apply at an ambient temperature of 25 ±3 °C, at normal atmospheric conditions.

| DESCRIPTION | VALUE |
|---|---|
| Capacitance range at 1 kHz, 1 V (RMS) | 100 to 10000 pF |
| Tolerance on capacitance | ±10%, ±20% |
| Rated AC voltage | 250 V |
| AC test voltage | 2500 V |
| Insulation resistance at 500 V (DC) | ≥10000 MΩ |
| Temperature coefficients on capacitance | 100 pF to 470 pF (Y5P); 680 pF and higher (Y5U) |
| Dissipation factor at 1 kHz, 1 V (RMS) | 2.5% max. |
| Operating temperature range | −30 to +85 °C |
| Climatic category | 25/085/21 |

## PACKAGING

The capacitors are supplied in bulk packaging (cardboard boxes), in tape on reel or in ammopack (see Table 2).

**Table 2** Packaging quantities

| BULK | REEL | AMMOPACK |
|---|---|---|
| 500 | 2000 | 2000 |

**Flanged capacitors on tape, lead pitch 5.0 mm (0.20 inch)**

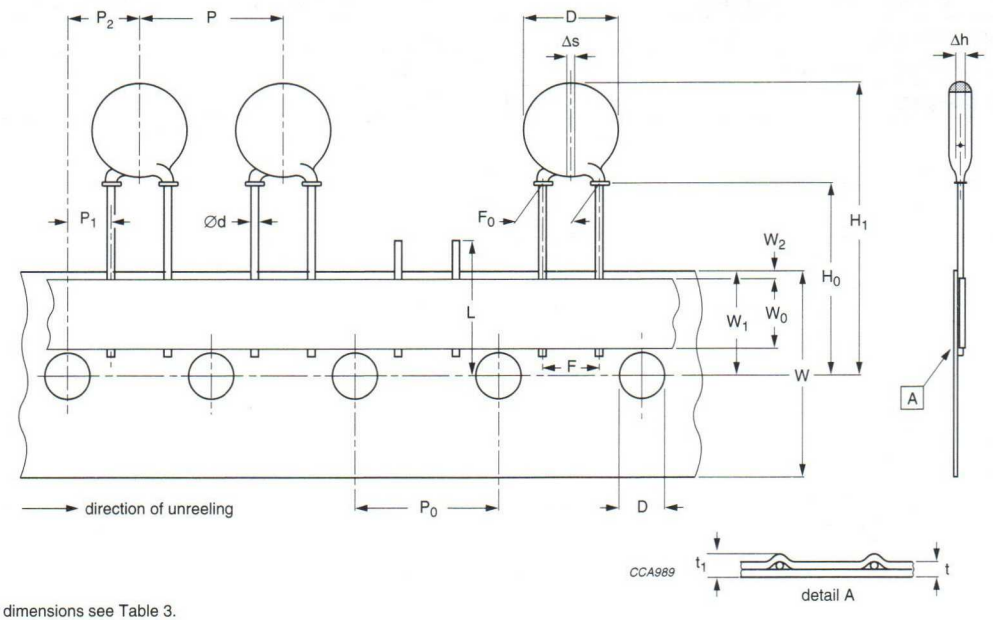


For dimensions see Table 3.

Fig.3 Capacitors, lead pitch 5.0 mm, on tape.

**Table 3** Dimensions of tape; see Fig.3

| SYMBOL | PARAMETER | DIMENSIONS (mm) | |
|---|---|---|---|
| | | NOMINAL | TOLERANCE |
| d | lead diameter | 0.6 | +0.6<br>−0.05 |
| P | pitch between capacitors | 12.7 | ±1.0 |
| $P_0$ | feed-hole pitch | 12.7 | ±0.2; note 1 |
| $P_1$ | feed-hole centre to lead centre | 3.85 | ±0.5; note 2 |
| $P_2$ | feed-hole centre to component centre | 6.35 | ±0.7; note 2 |
| F | lead spacing | 5.0 | +0.6<br>−0.1 |
| $F_0$ | lead-to-lead | 5.08 | +0.5<br>−0.1 |
| $\Delta h$ | component alignment | 0 | ±1.0 |
| $\Delta s$ | deviation along tape, left or right | 0 | ±0.6 |
| W | tape width | 18.0 | ±0.5 |
| $W_0$ | hold-down tape width | 6.0 | ±0.5 |
| $W_1$ | hole position | 9.0 | ±0.5 |
| $W_2$ | hold-down tape position | 0 | ±2 |
| $H_0$ | flange to tape centre | 16.0 | ±0.5 |
| $H_1$ | maximum component height | 33.75 | – |
| | minimum component height | 18.75 | – |
| L | maximum length of snipped lead | 11 | – |
| $D_0$ | feed-hole diameter | 4.0 | ±0.2 |
| t | total tape thickness | 0.65 | ±0.2 |
| $t_1$ | maximum thickness of tape and wires | 1.5 | – |

**Notes**

1. Cumulative pitch error: ±≤1 mm/20 pitches.
2. Obliquity maximum 3°.

REEL AND TAPE DATA

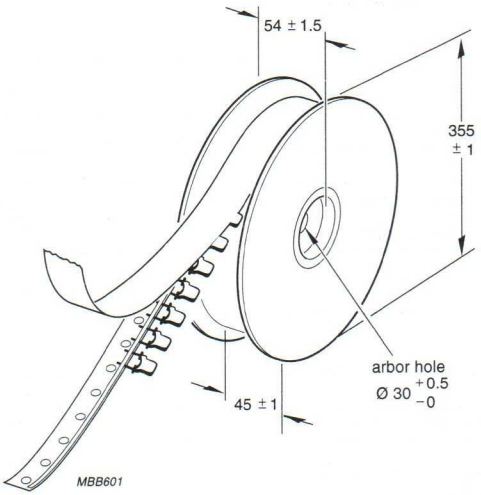


Dimensions in mm.

Fig.4 Reel with capacitors on tape.

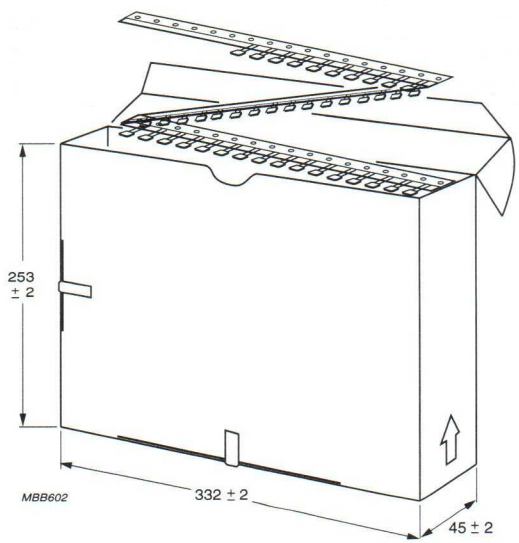


Dimensions in mm.

Fig.5 Ammopack with capacitors on tape.

# LEADED CERAMIC MULTILAYER CAPACITORS


| | Page |
|---|---|
| NUMERICAL INDEX | 78 |
| SELECTION GUIDE | 79 |
| GENERAL DATA | |
| Packaging | 81 |
| Characteristic curves | 87 |
| Tests and requirements | 90 |
| PRODUCT DATA | |
| Mono-axial™ series | 96 |
| Mono-kap™ series | 107 |
| Cross reference selection guide for 2222 series | 122 |

## NUMERICAL INDEX (preferred types)

**Sequence of catalogue numbers in accordance with the "12-DIGIT CODE"**


| SERIES | DESCRIPTION | PAGE |
|---|---|---|
| **Mono-axial** | | |
| 2252 205 | NP0, 50 V, ±5% | 98 |
| 2252 206 | NP0, 100 V, ±5% | 98 |
| 2252 222 | X7R, 25 V, ±10% | 99 |
| 2252 225 | X7R, 50 V, ±10% | 99 |
| 2252 226 | X7R, 100 V, ±10% | 99 |
| 2252 242 | Z5U, 25 V, ±20% | 100 |
| 2252 245 | Z5U, 50 V, ±20% | 100 |
| 2252 246 | Z5U, 100 V, ±20% | 100 |
| 2252 262 | Y5V, 25 V, –20%/+80% | 100 |
| 2252 265 | Y5V, 50 V, –20%/+80% | 100 |
| 2222 740 | NP0, 50 V, ±5% | 104 |
| 2222 740 | NP0, 100 V, ±5% | 104 |
| 2222 741 | X7R, 50 V, ±10% | 105 |
| 2222 741 | X7R, 100 V, ±10% | 105 |
| 2222 742 | Z5U, 50 V, ±20% | 106 |
| 2222 742 | Z5U, 100 V, ±20% | 106 |
| **Mono-kap** | | |
| 2252 305 | NP0, 50 V, ±5% | 110 |
| 2252 306 | NP0, 100 V, ±5% | 110 |
| 2252 325 | X7R, 50 V, ±10% | 111 |
| 2252 326 | X7R, 100 V, ±10% | 111 |
| 2252 345 | Z5U, 50 V, ±20% | 113 |
| 2252 346 | Z5U, 100 V, ±20% | 113 |
| 2252 362 | Y5V, 25 V, –20%/+80% | 114 |
| 2252 365 | Y5V, 50 V, –20%/+80% | 114 |
| 2222 730 | NP0, 50 V, ±5% (pitch 2.54 mm) | 118 |
| 2222 730 | NP0, 50 V, ±5% (pitch 5.08 mm) | 118 |
| 2222 730 | NP0, 100 V, ±5% (pitch 2.54 mm) | 118 |
| 2222 730 | NP0, 100 V, ±5% (pitch 5.08 mm) | 118 |
| 2222 731 | X7R, 50 V, ±10% (pitch 2.54 mm) | 119 |
| 2222 731 | X7R, 50 V, ±10% (pitch 5.08 mm) | 119 |
| 2222 731 | X7R, 100 V, ±10% (pitch 2.54 mm) | 119 |
| 2222 731 | X7R, 100 V, ±10% (pitch 5.08 mm) | 119 |
| 2222 733 | Z5U, 50 V, ±20% (pitch 2.54 mm) | 121 |
| 2222 733 | Z5U, 50 V, ±20% (pitch 5.08 mm) | 121 |
| 2222 733 | Z5U, 100 V, ±20% (pitch 2.54 mm) | 121 |
| 2222 733 | Z5U, 100 V, ±20% (pitch 5.08 mm) | 121 |

## SELECTION GUIDE FOR LEADED CERAMIC MULTILAYER CAPACITORS

| TC | $U_{R(DC)}$ (V) | CAP. RANGE | CAP. TOL. | CATALOGUE NUMBERS 2252 ... ..... | CLIMATIC CATEGORY | STABILITY | TYPICAL CIRCUITS | TARGET APPLICATION | PAGE |
|---|---|---|---|---|---|---|---|---|---|
| **Class 1, axial Mono-axial™ series**; preferred types in **bold** | | | | | | | | | |
| NP0 (C0G) | 50 | 10 pF to 4700 pF | **±5%** | **205** | 55/125/21 | high | high frequency; tuning; temperature compensation; precision clocking | general industrial; high stress circuits; high stress automotive; professional circuits; measuring instruments | 98 |
| | | | ±10% | 215[1] | | | | | – |
| | 100 | 10 pF to 3300 pF | **±5%** | **206** | | | | | 98 |
| | | | ±10% | 216[1] | | | | | – |
| **Class 2, axial Mono-axial™ series**; preferred types in **bold** | | | | | | | | | |
| 2C1 (X7R) | 25 | 0.039 µF to 0.22 µF | **±10%** | **222** | 55/125/21 | high | coupling/decoupling; filtering | high stress circuits; high stress automotive; professional circuits; measuring instruments | 99 |
| | | | ±20% | 232[1] | | | | | – |
| | 50 | 100 pF to 0.22 µF | **±10%** | **225** | | | | | 99 |
| | | | ±20% | 235[1] | | | | | – |
| | 100 | 100 pF to 0.10 µF | **±10%** | **226** | | | | | 99 |
| | | | ±20% | 236[1] | | | | | – |
| Z5U | 25 | 0.047 µF to 0.10 µF | **±20%** | **242** | 10/085/21 | medium | coupling/decoupling; filtering | general industrial; consumer | 100 |
| | | | –20/+80% | 252[1] | | | | | – |
| | 50 | 1000 pF to 0.47 µF | **±20%** | **245** | | | | | 100 |
| | | | –20/+80% | 255[1] | | | | | – |
| | 100 | 1000 pF to 0.10 µF | **±20%** | **246** | | | | | 100 |
| | | | –20/+80% | 256[1] | | | | | – |
| Y5V | 25 | 0.01 µF to 1.0 µF | –20/+80% | 262[1] | 10/085/21 | medium | coupling/decoupling; filtering | general industrial; consumer | – |
| | 50 | | **–20/+80%** | **265** | | | | | 100 |

| TC | $U_{R(DC)}$ (V) | CAP. RANGE | CAP. TOL. | CATALOGUE NUMBERS 2252 ... ..... | CLIMATIC CATEGORY | STABILITY | TYPICAL CIRCUITS | TARGET APPLICATION | PAGE |
|---|---|---|---|---|---|---|---|---|---|
| **Class 1, radial Mono-kap™ series**; preferred types in **bold** | | | | | | | | | |
| NP0 (C0G) | 50 | 10 pF to 0.022 µF | **±5%** | **305** | 55/125/21 | high | high frequency; tuning; temperature compensation; precision clocking | general industrial; high stress circuits; high stress automotive; professional circuits; measuring instruments | 110 |
| | | | ±10% | 315(1) | | | | | – |
| | 100 | 10 pF to 0.01 µF | **±5%** | **306** | | | | | 110 |
| | | | ±10% | 316(1) | | | | | – |
| **Class 2, radial Mono-kap™ series**; preferred types in **bold** | | | | | | | | | |
| 2C1 (X7R) | 25 | 0.039 µF to 0.22 µF | ±10% | 322(1) | 55/125/21 | high | coupling/decoupling; filtering | high stress circuits; high stress automotive; professional circuits; measuring instruments | – |
| | | | ±20% | 332(1) | | | | | – |
| | 50 | 100 pF to 1.0 µF | **±10%** | **325** | | | | | 111 |
| | | | ±20% | 335(1) | | | | | – |
| | 100 | 100 pF to 0.47 µF | **±10%** | **326** | | | | | 111 |
| | | | ±20% | 336(1) | | | | | – |
| Z5U | 25 | 0.047 µF to 0.22 µF | ±20% | 342(1) | 10/085/21 | medium | coupling/decoupling; filtering | general industrial; consumer | – |
| | | | –20/+80% | 352(1) | | | | | – |
| | 50 | 1000 pF to 2.2 µF | **±20%** | **345** | | | | | 113 |
| | | | –20/+80% | 355(1) | | | | | – |
| | 100 | 1000 pF to 1 µF | **±20%** | **346** | | | | | 113 |
| | | | –20/+80% | 356(1) | | | | | – |
| Y5V | 25 | 0.01 µF to 1.0 µF | **–20/+80%** | **362** | 10/085/21 | medium | coupling/decoupling; filtering | general industrial; consumer | 114 |
| | 50 | | **–20/+80%** | **365** | | | | | 114 |

**Note**

1. Non-preferred types available on request.

## PACKAGING

The monolithic ceramic capacitors are supplied in bulk packaging, taped on reel, or in ammopack; see Tables 1 and 3.

### Mono-axial™ capacitors

**Table 1** Packaging quantities and box dimensions

| PACKAGING | SIZE CODE | SMALLEST PACKAGING QUANTITY (SPQ) | | BOX DIMENSIONS L × W × H (mm) |
|---|---|---|---|---|
| | | 2252 SERIES FE 15-digit | 2222 SERIES US 15-digit | |
| Tape on reel | 15; 20 | 7000 | 5000(1) | 370 × 370 × 90 |
| | 29 | 4000 | 2500(1) | |
| Ammopack | 15; 20 | 4000 | 4000 | 265 × 85 × 95 |
| | 29 | 2000 | 2000 | |

**Note**

1. Non-standard SPQ for 2222 series and US 15-digit code (including FE 15-digit code with suffix XV) which will be phased out in the future.

### Capacitors on bandolier, Mono-axial series

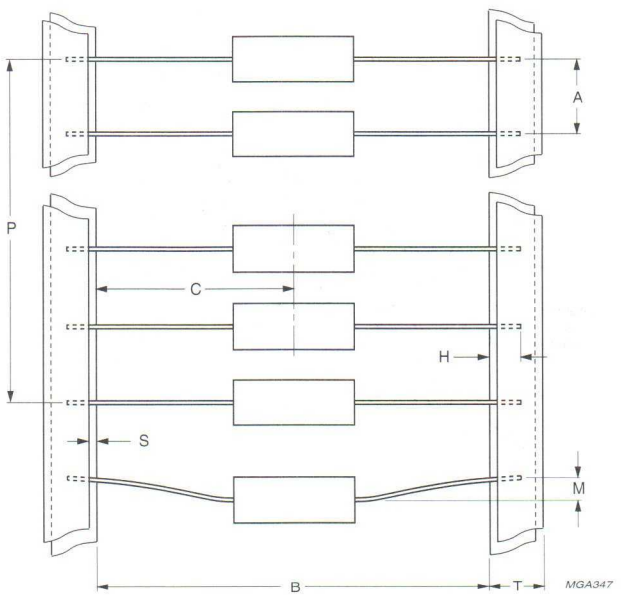


Maximum 0.1% of the total number of capacitors per reel may be missing.
A maximum of 1 consecutive vacant position is followed by 6 consecutive components.
Tape begins and ends with minimum of 60 empty positions (300 mm tape).
Maximum of 5 splices per reel.
For dimensions see Table 2.

Fig.1 Capacitors on bandolier, Mono-axial series.

**Table 2** Dimensions of bandolier; see Fig.1

| SYMBOL | PARAMETER | DIMENSIONS | |
|---|---|---|---|
| | | mm | inch |
| B | inside tape spacing | 52.4 ±1.5 | 2.062 ±0.059 |
| C | centre-to-tape-spacing | ±0.8 | ±0.031 |
| P | cumulative pitch, 6 consecutive components | ±1.5 | ±0.059 |
| A | components pitch | 5 ±0.5 | 0.197 ±0.015 |
| M | lead bend | <1.2 | <0.047 |
| S | exposed adhesive | <0.8 | <0.031 |
| T | tape width | 6.35 | 0.250 |
| H | lead sandwich | >3.96 | >0.156 |

REEL DATA, MONO-AXIAL SERIES

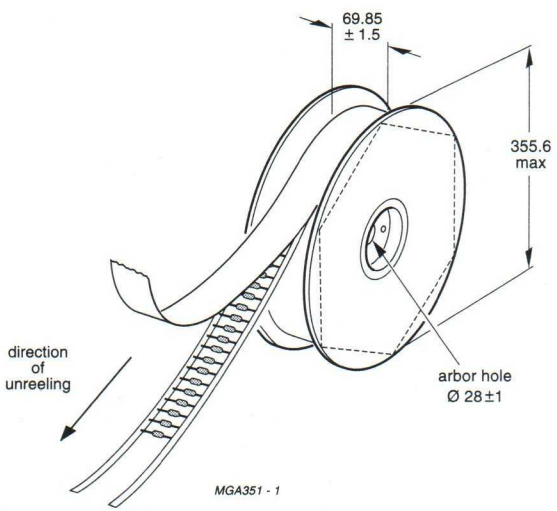


Dimensions in mm.

Maximum 0.1% of the total number of capacitors per reel may be missing.
A maximum of 1 consecutive vacant position is followed by 6 consecutive components.

Tape begins and ends with minimum of 60 empty positions (300 mm tape).

Maximum of 5 splices per reel.

For capacitor length (L) and diameter (ØD) refer to this handbook,
Chapter *"Leaded ceramic multilayer capacitors"*, Section *"Mono-axial™"*, *"Table 1"*.

Fig.2 Reel with capacitors on tape; Mono-axial series.

### Mono-kap™ capacitors

**Table 3** Packaging quantities and box dimensions

| PACKAGING | SIZE CODE | SMALLEST PACKAGING QUANTITY (SPQ) | | BOX DIMENSIONS L × W × H (mm) |
|---|---|---|---|---|
| | | 2252 SERIES FE 15-digit | 2222 SERIES US 15-digit | |
| Bulk; note 1 | 15; 20 | 5000 | 5000 | 245 × 120 × 65 |
| | 30 | 3000 | 3000 | |
| Tape on reel | 15 | 4000 | 2500(2) | 370 × 370 × 60 |
| | 20 | 3000 | 2500(2) | |
| | 30 | 2500 | 2500 | |
| Ammopack | 15; 20 | 2500 | 2500 | 335 × 290 × 50 |
| | 30 | 2000 | 2000 | |

**Notes**

1. SPQ contains 1 or a multiple of poly-bags, 1000 units per bag.
2. Non-standard SPQ for 2222 series and US 15-digit code (including FE 15-digit code with suffix XV) which will be phased out in the future.

### Capacitors on tape, lead spacing 5.0 and 2.5 mm, Mono-kap series

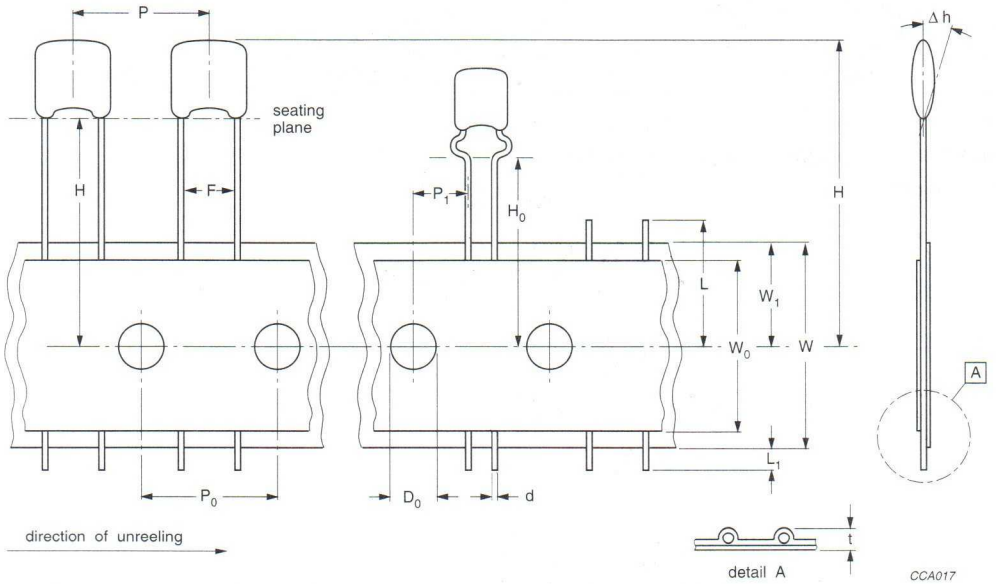


Lead space (F) shall be measured at 3.6 ±0.5 mm from the capacitor seating plane.

Maximum 0.5% of the total number of capacitors per reel may be missing.
A maximum of 1 consecutive vacant position is followed by 6 consecutive components.

Tape begins and ends with minimum of 24 empty positions (300 mm tape).

Maximum of 5 splices per reel.

For dimensions see Table 4.

Fig.3 Capacitors, with lead spacing 5.0 and 2.5 mm, for Mono-kap series on tape.

**Table 4** Dimensions of tape; see Fig.3

| SYMBOL | PARAMETER | DIMENSIONS | |
|---|---|---|---|
| | | mm | inch |
| L | cut off length | <11 | <0.443 |
| $L_1$ | lead end protrusion | <2 | <0.079 |
| H | height to seating plane | >16 | >0.630 |
| $H_0$ | height to seating plane (formed leads) | 16 ±0.5 | 0.630 ±0.020 |
| $H_1$ | top of component height | <32 | <1.260 |
| Δh | body inclination | 0.0 ±<1.0 | 0 ±<0.039 |
| W | carrier tape width | 18 +1.0/–0.5 | 0.709 +0.039/–0.020 |
| $W_0$ | hold down tape width | 15 ref.; note 1 | 0.591 ref.; note 1 |
| $W_1$ | sprocket hole position | 9 +0.075/–0.5 | 0.354 +0.030/–0.020 |
| F | 1e lead space; note 2 | 2.5 +0.6/–0.4 | 0.100 +0.024/–0.016 |
| | 2e lead space; note 2 | 5.0 +0.6/–0.4 | 0.200 +0.024/–0.016 |
| $P_0$ | sprocket hole pitch | 12.7 ±0.3 | 0.500 ±0.012 |
| $P_1$ | 1e sprocket hole centre to lead centre; note 2 | 5.08 ±0.7 | 0.200 ±0.028 |
| | 2e sprocket hole centre to lead centre; note 2 | 3.85 ±0.7 | 0.151 ±0.028 |
| $D_0$ | sprocket hole diameter | 4 ±0.3 | 0.157 ±0.012 |
| t | overall tape thickness | <0.9 | <0.035 |
| d | wire lead diameter | 0.5 ±0.05 | 0.02 ±0.002 |
| P | taping pitch | 12.7 ref. | 0.500 ref. |

**Notes**

1. Tape width of 6 mm (0.236 inches) permissible.
2. e = 2.54 mm.

REEL AND TAPE DATA, MONO-KAP SERIES

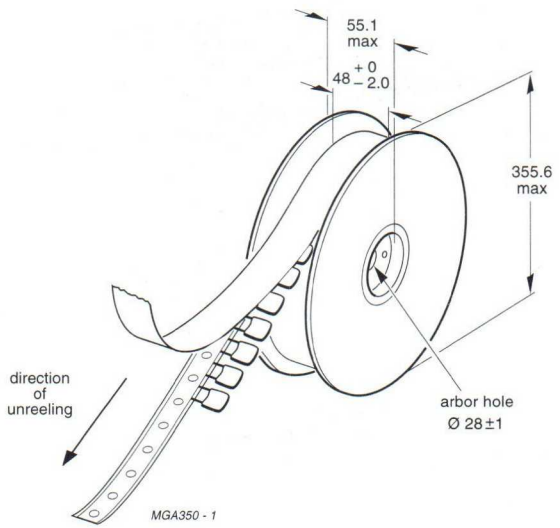


Dimensions in mm.

Maximum 0.5% of the total number of capacitors per reel may be missing.
A maximum of 2 consecutive vacant position is followed by 6 consecutive components.

Tape begins and ends with minimum of 24 empty positions (300 mm tape).

Maximum of 5 splices per reel.

Cumulative pitch tolerance over 20 consecutive units not to exceed ±1.0 mm.

Lead space (F) shall be measured at 3.6 ±0.5 mm from the capacitor seating plane.

Fig.4 Reel with capacitors on tape; Mono-kap series.

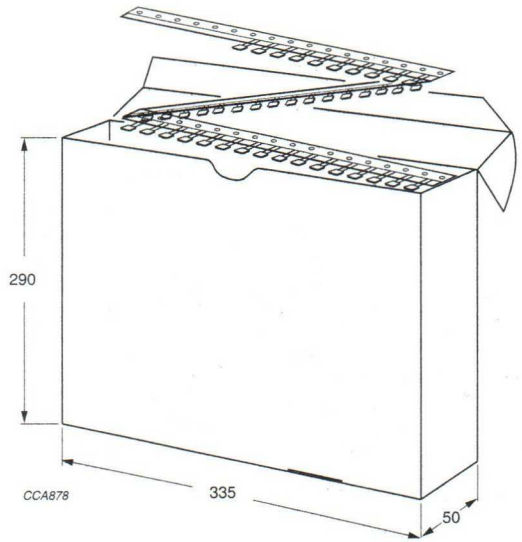


Dimensions in mm.

Maximum 0.5% of the total number of capacitors per box may be missing.
A maximum of 2 consecutive vacant positions is followed by 6 consecutive components.

Tape begins and ends with minimum of 24 empty positions (300 mm tape).

Maximum of 5 splices per box.

Cumulative pitch tolerance over 20 consecutive units not to exceed ±1.0 mm.

Lead space (F) shall be measured at 3.6 ±0.5 mm from the capacitor seating plane.

Fig.5 Ammopack with capacitors on tape; Mono-kap series.

## CHARACTERISTIC CURVES

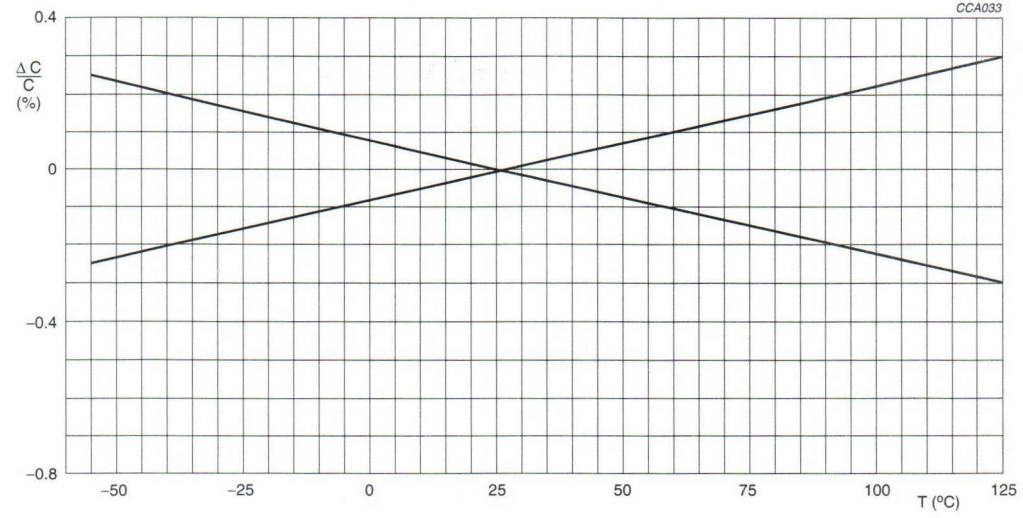


For **NP0/C0G**.

Fig.6 Typical capacitance change as a function of temperature.

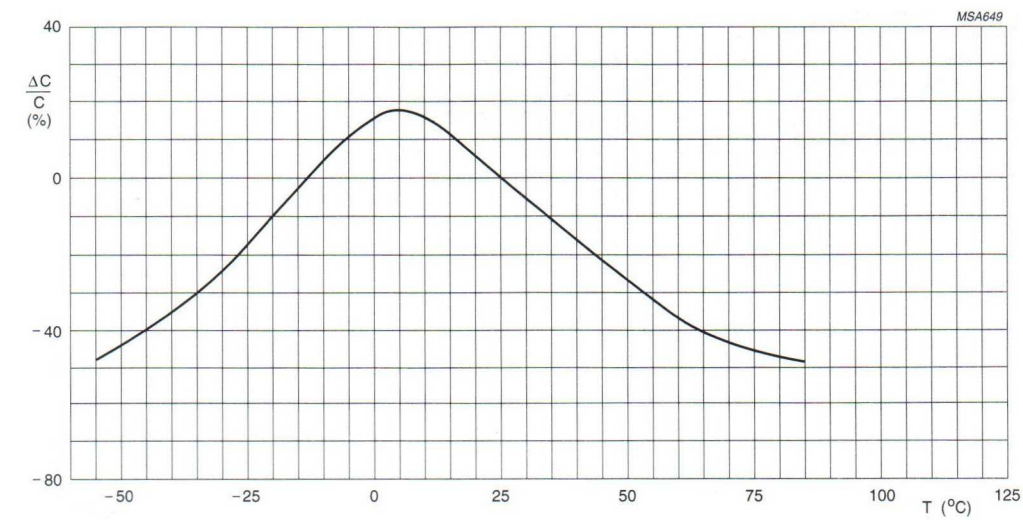


For **Z5U**.

Fig.7 Typical capacitance change as a function of temperature.

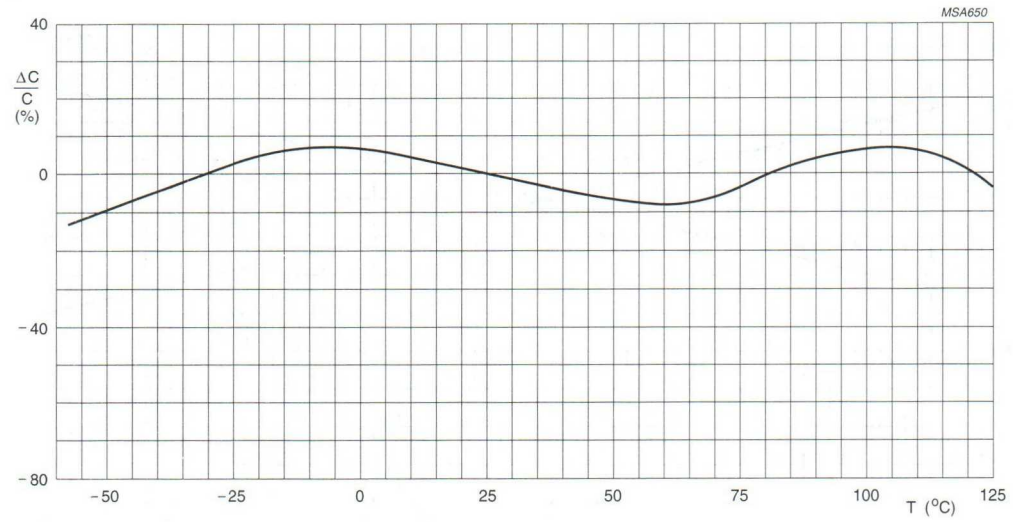


For **X7R**.

Fig.8 Typical capacitance change as a function of temperature.

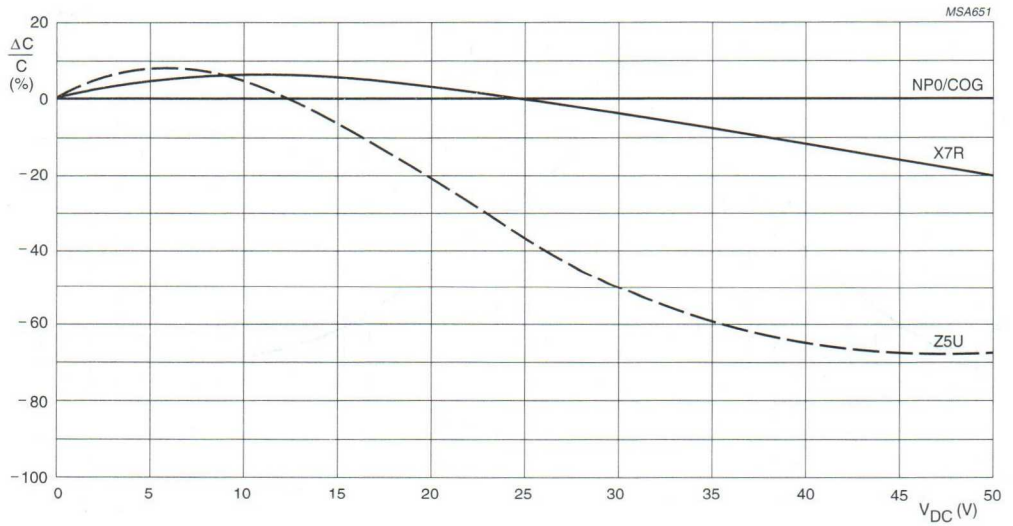


Fig.9 Typical capacitance change as a function of DC voltage.

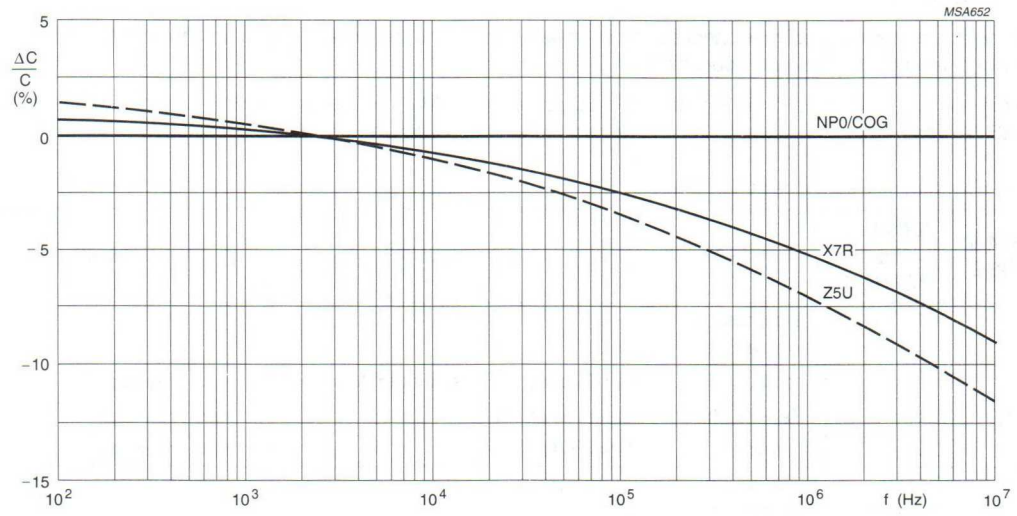


Fig.10 Typical capacitance change as a function of frequency.

## TESTS AND REQUIREMENTS

### Class 1 capacitors

After manufacture, each capacitor is checked on capacitance, tan δ and test voltage. Apart from this the following quality checks are carried out by frequent inspections.

Essentially all tests mentioned in the schedule of *"IEC publication 384-8"*, category 55/125/21 (temperature range −55/+125 °C; damp heat, long term, 21 days) are carried out in accordance with *"IEC publication 68"*.

**Table 5** Test procedures and requirements

| IEC 384-8 CLAUSE | IEC 68-2 TEST METHOD | TEST | PROCEDURE | REQUIREMENTS |
|---|---|---|---|---|
| 4.4 | | robustness of terminations: | | |
| | | pull-off | pull velocity 15 cm/minute; load 5 N | no lead breakage |
| | $Ua_1$ | tensile strength | axial force 10 N | no lead breakage |
| | Ub | bending | load 5 N; 4 × 90° | no lead breakage |
| 4.6 | Ta method 1 | solderability (solder bath) | 235 °C; 2 s | good tinning |
| 4.5 | Tb method 1A | resistance to soldering heat | 260 °C; 10 s | no visible damage<br>ΔC/C: ±≤0.5% or ±0.5 pF after 1 to 2 hours |
| 4.7 | Na | rapid change of temperature | 30 minutes at −55 °C and 30 minutes at +125 °C; 5 cycles | no damage after 24 hours<br>ΔC/C: ±≤0.5% or ±0.5 pF |
| 4.8 | Fc | vibration | 10 to 55 to 10 Hz; 0.75 mm displacement; 3 directions; 6 hours | no visible damage |
| 4.9 | Eb | bump | 4000 bumps in 2 directions; 40 g; pulse time 6 ms | no visible damage |
| | | inflammability | 15 s; 35 mm above bunsen burner with flame-height 40 to 60 mm | self-extinguishing within 15 s after removal of bunsen burner |
| 4.3 | | temperature coefficient | between +20 and −55 °C, and between +20 and +125 °C | within tolerance as specified for each particular material |

# Leaded ceramic multilayer capacitors — General data

| IEC 384-8 CLAUSE | IEC 68-2 TEST METHOD | TEST | PROCEDURE | REQUIREMENTS |
|---|---|---|---|---|
| 4.11 | | climatic sequence: | | |
| 4.11.2 | B | dry heat | 16 hours; +125 °C | no visible damage |
| 4.11.3 | Db | damp heat (accelerated) 1st cycle | 12 hours; +55 °C; 90 to 96% RH<br>12 hours; +25 °C; 95 to 100% RH | after recovery of 1 to 2 hours immediately followed by cold test |
| 4.11.4 | A | cold | 2 hours; −55 °C | no visible damage |
| 4.11.5 | M | low air pressure | 1 hour at 8.5 kPa, last 2 minutes rated voltage | no breakdown or flashover |
| 4.11.6 | Db | damp heat (accelerated) remaining cycle | 12 hours; +55 °C; 90 to 96% RH<br>12 hours; +25 °C; 95 to 100% RH | $\Delta C/C$: $\pm \leq 1\%$ or $\pm 1$ pF<br>tan $\delta$: $\leq 2 \times$ specified tan $\delta$<br>$R_{ins}$ after 1 to 2 hours: >5000 MΩ |
| 4.12 | Ca | damp heat, steady state (half number of the lot at rated voltage, other half at zero voltage) | 21 days; +40 °C; 90 to 95% RH | $\Delta C/C$: $\pm \leq 1\%$ or $\pm 1$ pF<br>tan $\delta$: $\leq 2 \times$ specified tan $\delta$<br>$R_{ins}$ after 1 to 2 hours: >5000 MΩ |
| 4.13 | | endurance | 1000 hours at maximum temperature, at $1.5 \times$ rated voltage | $\Delta C/C$: $\pm \leq 1\%$ or $\pm 1$ pF<br>tan $\delta$: $\leq 1.5 \times$ specified tan $\delta$<br>$R_{ins}$: >3000 MΩ |
| | | resistance to solvents | 3 minutes ultrasonic washing in trichloroethylene;<br>1 minute drying; 30 °C;<br>10 brush strokes | marking and colour code must remain legible and not be discoloured; no mechanical or electrical damage or deterioration of the material |

### Class 2 capacitors

After manufacture, each capacitor is checked on capacitance, tan δ and test voltage. Apart from this the following quality checks are carried out by frequent inspections.

Essentially all tests mentioned in the schedule of *"IEC publication 384-9"*, categories 55/125/21 and 10/85/21 respectively for X7R-2C1 and Z5U (temperature ranges –55/+125 °C and +10/+85 °C; damp heat, long term, 21 days) are carried out in accordance with *"IEC publication 68"*.

**Table 6** Test procedures and requirements

| IEC 384-9 CLAUSE | IEC 68-2 TEST METHOD | TEST | PROCEDURE | REQUIREMENTS |
|---|---|---|---|---|
| 4.1 | | pre-conditioning | 1 hour; +150 °C; reference measurement after 24 hours | |
| 4.5 | | robustness of terminations: | | |
| | | pull-off | pull velocity 15 cm/minute; load 5 N | no lead breakage |
| | $Ua_1$ | tensile strength | axial force 10 N | no lead breakage |
| | Ub | bending | load 5 N; 4 × 90° | no lead breakage |
| 4.7 | Ta method 1 | solderability (solder bath) | 235 °C; 2 s | good tinning |
| 4.6 | Tb method 1A | resistance to soldering heat | pre-conditioning: 260 °C; 10 s | no visible damage |
| 4.8 | Na | rapid change of temperature | pre-conditioning: for X7R: –55/+125 °C; 5 cycles; for Z5U: +10/+85 °C; 5 cycles | no damage<br>ΔC/C after 24 hours: X7R: ±≤10% Z5U: ±≤20% |
| 4.9 | Fb | vibration | 10 to 55 to 10 Hz; 0.75 mm displacement; 3 directions; 6 hours | no visible damage |
| 4.10 | Eb | bump | 4000 bumps in 2 directions; 40 g; pulse time 6 ms | no visible damage |
| | | inflammability | 15 s; 35 mm above bunsen burner with flame-height 40 to 60 mm | self-extinguishing within 15 s after removal of bunsen burner |
| | | resistance to solvents | 3 minutes ultrasonic washing in trichloroethylene; 1 minute drying; 30 °C; 10 brush strokes | marking and colour code must remain legible and not be discoloured; no mechanical or electrical damage or deterioration of the material |

| IEC 384-9 CLAUSE | IEC 68-2 TEST METHOD | TEST | PROCEDURE | REQUIREMENTS |
|---|---|---|---|---|
| 4.12 | | climatic sequence: | | |
| 4.12.1 | | pre-conditioning | 1 hour; +150 °C | |
| 4.12.2 | Ba | dry heat | 16 hours at maximum temperature | no visible damage |
| 4.12.3 | Db | damp heat (accelerated) 1st cycle | 12 hours; +55 °C; 90 to 96% RH<br>12 hours; +25 °C; 95 to 100% RH | no visible damage; after recovery of 1 to 2 hours immediately followed by cold test |
| 4.12.4 | Aa | cold | 2 hours at minimum temperature | no visible damage |
| 4.12.5 | M | low air pressure | 1 hour at 8.5 kPa, last 2 minutes rated voltage | no breakdown or flashover |
| 4.12.6 | Db | damp heat (accelerated) remaining cycle | 12 hours; +55 °C; 90 to 96% RH<br>12 hours; +25 °C; 95 to 100% RH | after 24 hours recovery:<br>$\Delta C/C$:<br>X7R: $\pm \leq 15\%$<br>Z5U: $\pm \leq 20\%$<br>tan $\delta$: $\leq 7\%$<br>$R_{ins}$: >1000 MΩ |
| 4.13 | Ca | damp heat, steady state (half number of samples at rated voltage, other half of samples no voltage applied) | pre-conditioning:<br>21 days; +40 °C; 90 to 95% RH | no visible damage<br>after 24 hours:<br>$\Delta C/C$:<br>X7R: $\pm \leq 15\%$<br>Z5U: $\pm \leq 30\%$<br>tan $\delta$: $\leq 7\%$<br>$R_{ins}$: >1000 MΩ |
| 4.14 | | endurance | pre-conditioning | after 24 hours:<br>$\Delta C/C$:<br>X7R: $\pm \leq 20\%$<br>Z5U: $\pm \leq 30\%$<br>tan $\delta$: $\leq 7\%$<br>$R_{ins}$: >2000 MΩ |
| 4.4 | | temperature characteristic | pre-conditioning: minimum and maximum temperature | in accordance with specification |

# PRODUCT DATA

# Leaded ceramic multilayer capacitors Mono-axial™ series

## FEATURES

- High capacitance per unit volume
- Low cost.

## APPLICATIONS

These conformally coated axial leaded capacitors are designed for commercial and industrial applications in four dielectrics, NP0 (ultra-stable), X7R (stable) and Z5U, Y5V (general purpose). Applications include timing, coupling/decoupling, signal comparison and biasing. Mono-axial™ capacitors are suitable for automatic insertion equipment.

## DESCRIPTION

The basic capacitor construction consists of ceramic dielectric materials processed into a tape with a typical thickness range from 0.025 to 0.076 mm. Metal electrode patterns are applied using a thick film screening process. Multiple layers are stacked and laminated in such a manner that electrodes are alternately exposed when the pattern is cut into individual chip capacitors. The capacitors are fired through a high temperature profile to mature the ceramic and metal into a homogeneous unit.

Metal end terminations are applied and fired to provide electrical connection between the individual layers. Tinned leads are attached using a solder. Encapsulation consists of a moisture resistant gold colour conformal epoxy coating that meets the flame requirements of *"UL94V-0"*.

## QUICK REFERENCE DATA

| DESCRIPTION | VALUE | | | | | | | |
|---|---|---|---|---|---|---|---|---|
| | **2252 205 .....** | **2252 206 .....** | **2252 225 .....** | **2252 226 .....** | **2252 245 .....** | **2252 246 .....** | **2252 262 .....** | **2252 265 .....** |
| Capacitance range | 10 to 3300 pF | | 220 pF to 0.22 μF | | 1000 pF to 0.47 μF | | 0.01 to 1.0 μF | |
| Rated DC voltage | 50 V | 100 V | 50 V(1) | 100 V(1) | 50 V(1) | 100 V(1) | 25 V | 50 V |
| Tolerance on capacitance | ±5% | | ±10% | | ±20% | | +80%/–20% | |
| Temperature coefficient | NP0 | | X7R | | Z5U | | Y5V | |

**Note**

1. 7th digit of the catalogue number for $U_{R(DC)}$ 25 V is: 2.

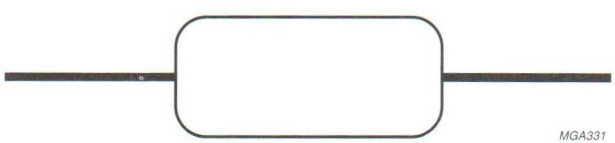


Fig.1 Simplified outline.

## MECHANICAL DATA

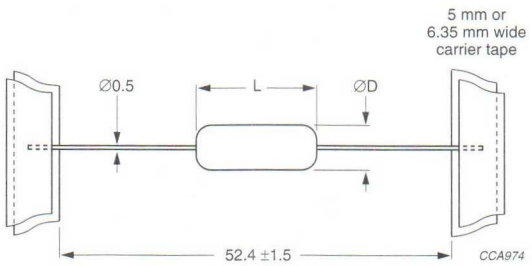


Dimensions in mm.

Fig.2 Tape carrier.

**Marking** (see Fig.3)

Date code (**DDD**):

Three-digit code; first digit denotes year, last two denote week of manufacture.

741 = 1997, wk 41

Capacitance value (**CCC**):

10 pF to 99 pF; actual value in pF (2 digits only)

100 pF and above; coded capacitance value (same as used in P/N).

Capacitance tolerance (**T**):

Standard EIA tolerance (same as used in P/N).

Material code (**M**):

A = C0G

C = X7R

E = Z5U

Y = Y5V.

Voltage code (**V**):

1 = 100 V

3 = 25 V

5 = 50 V.

**Physical dimensions**

**Table 1** Capacitor dimensions and mass

| SIZE | $L_{max}$ (1) (mm) | $\varnothing D_{max}$ (1) (mm) | MASS (g) |
|---|---|---|---|
| 15 | 3.8 (0.150) | 2.5 (0.100) | ≈0.14 |
| 20 | 5.0 (0.200) | 3.0 (0.120) | ≈0.14 |
| 29 | 7.5 (0.290) | 3.8 (0.150) | ≈0.23 |

**Note**

1. Dimensions between parentheses are in inches.

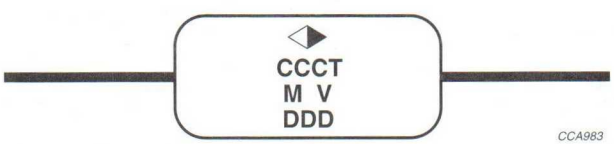


Fig.3 Markings on the body.

## PACKAGING

For details refer to this handbook, Section *"Leaded ceramic multilayer capacitors"*, Chapter *"Packaging"*.

## ORDERING INFORMATION (preferred types)

**Table 2** Capacitance, rated voltage, mechanical dimensions and ordering information

| C | $U_{R(DC)}$ (V) | SIZE CODE | CLEAR TEXT CODE | CATALOGUE NUMBER |
|---|---|---|---|---|
| **NP0 (C0G) ±5% tolerance** | | | | |
| 10 pF | 50 | 15 | A100J15C0GF5TAA | 2252 205 20109 |
| | 100 | 15 | A100J15C0GH5TAA | 2252 206 20109 |
| 12 pF | 50 | 15 | A120J15C0GF5TAA | 2252 205 20129 |
| 15 pF | 50 | 15 | A150J15C0GF5TAA | 2252 205 20159 |
| 18 pF | 50 | 15 | A180J15C0GF5TAA | 2252 205 20189 |
| 22 pF | 50 | 15 | A220J15C0GF5TAA | 2252 205 20229 |
| | 100 | 15 | A220J15C0GH5TAA | 2252 206 20229 |
| 27 pF | 50 | 15 | A270J15C0GF5TAA | 2252 205 20279 |
| 33 pF | 50 | 15 | A330J15C0GF5TAA | 2252 205 20339 |
| 39 pF | 50 | 15 | A390J15C0GF5TAA | 2252 205 20399 |
| 47 pF | 50 | 15 | A470J15C0GF5TAA | 2252 205 20479 |
| | 100 | 15 | A470J15C0GH5TAA | 2252 206 20479 |
| 56 pF | 50 | 15 | A560J15C0GF5TAA | 2252 205 20569 |
| 68 pF | 50 | 15 | A680J15C0GF5TAA | 2252 205 20689 |
| 82 pF | 50 | 15 | A820J15C0GF5TAA | 2252 205 20829 |
| 100 pF | 50 | 15 | A101J15C0GF5TAA | 2252 205 20101 |
| | 100 | 15 | A101J15C0GH5TAA | 2252 206 20101 |
| 150 pF | 50 | 15 | A151J15C0GF5TAA | 2252 205 20151 |
| 220 pF | 50 | 15 | A221J15C0GF5TAA | 2252 205 20221 |
| | 100 | 15 | A221J15C0GH5TAA | 2252 206 20221 |
| 330 pF | 50 | 15 | A331J15C0GF5TAA | 2252 205 20331 |
| 470 pF | 50 | 15 | A471J15C0GF5TAA | 2252 205 20471 |
| | 100 | 15 | A471J15C0GH5TAA | 2252 206 20471 |
| 680 pF | 50 | 15 | A681J15C0GF5TAA | 2252 205 20681 |
| 1000 pF | 50 | 15 | A102J15C0GF5TAA | 2252 205 20102 |
| | 100 | 20 | A102J20C0GH5TAA | 2252 206 40102 |
| 1500 pF | 50 | 20 | A152J20C0GF5TAA | 2252 205 40152 |
| 2200 pF | 50 | 20 | A222J20C0GF5TAA | 2252 205 40222 |
| 3300 pF | 50 | 20 | A332J20C0GF5TAA | 2252 205 40332 |

# Leaded ceramic multilayer capacitors Mono-axial™ series

| C | $U_{R(DC)}$ (V) | SIZE CODE | CLEAR TEXT CODE | CATALOGUE NUMBER |
|---|---|---|---|---|
| **X7R ±10% tolerance** | | | | |
| 220 pF | 50 | 15 | A221K15X7RF5TAA | 2252 225 20221 |
| | 100 | 15 | A221K15X7RH5TAA | 2252 226 20221 |
| 330 pF | 50 | 15 | A331K15X7RF5TAA | 2252 225 20331 |
| 470 pF | 50 | 15 | A471K15X7RF5TAA | 2252 225 20471 |
| | 100 | 15 | A471K15X7RH5TAA | 2252 226 20471 |
| 680 pF | 50 | 15 | A681K15X7RF5TAA | 2252 225 20681 |
| 1000 pF | 50 | 15 | A102K15X7RF5TAA | 2252 225 20102 |
| | 100 | 15 | A102K15X7RH5TAA | 2252 226 20102 |
| 1500 pF | 50 | 15 | A152K15X7RF5TAA | 2252 225 20152 |
| 2200 pF | 50 | 15 | A222K15X7RF5TAA | 2252 225 20222 |
| | 100 | 15 | A222K15X7RH5TAA | 2252 226 20222 |
| 3300 pF | 50 | 15 | A332K15X7RF5TAA | 2252 225 20332 |
| 4700 pF | 50 | 15 | A472K15X7RF5TAA | 2252 225 20472 |
| | 100 | 15 | A472K15X7RH5TAA | 2252 226 20472 |
| 6800 pF | 50 | 15 | A682K15X7RF5TAA | 2252 225 20682 |
| 0.01 µF | 50 | 15 | A103K15X7RF5TAA | 2252 225 20103 |
| | 100 | 15 | A103K15X7RH5TAA | 2252 226 20103 |
| 0.015 µF | 50 | 15 | A153K15X7RF5TAA | 2252 225 20153 |
| 0.022 µF | 50 | 15 | A223K15X7RF5TAA | 2252 225 20223 |
| | 100 | 20 | A223K20X7RH5TAA | 2252 226 40223 |
| 0.033 µF | 50 | 15 | A333K15X7RF5TAA | 2252 225 20333 |
| 0.047 µF | 50 | 15 | A473K15X7RF5TAA | 2252 225 20473 |
| | 100 | 20 | A473K20X7RH5TAA | 2252 226 40473 |
| 0.068 µF | 50 | 20 | A683K20X7RF5TAA | 2252 225 40683 |
| 0.1 µF | 25 | 15 | A104K15X7RE5TAA | 2252 222 20104 |
| | 50 | 20 | A104K20X7RF5TAA | 2252 225 40104 |
| | 100 | 20 | A104K20X7RH5TAA | 2252 226 40104 |
| 0.15 µF | 25 | 20 | A154K20X7RE5TAA | 2252 222 40154 |
| 0.22 µF | 25 | 20 | A224K20X7RE5TAA | 2252 222 40224 |

# Leaded ceramic multilayer capacitors Mono-axial™ series

| C | $U_{R(DC)}$ (V) | SIZE CODE | CLEAR TEXT CODE | CATALOGUE NUMBER |
|---|---|---|---|---|
| **Z5U ±20% tolerance** | | | | |
| 1000 pF | 50 | 15 | A102M15Z5UF5TAA | 2252 245 20102 |
| | 100 | 15 | A102M15Z5UH5TAA | 2252 246 20102 |
| 2200 pF | 50 | 15 | A222M15Z5UF5TAA | 2252 245 20222 |
| 4700 pF | 50 | 15 | A472M15Z5UF5TAA | 2252 245 20472 |
| 0.01 µF | 50 | 15 | A103M15Z5UF5TAA | 2252 245 20103 |
| | 100 | 15 | A103M15Z5UH5TAA | 2252 246 20103 |
| 0.022 µF | 50 | 15 | A223M15Z5UF5TAA | 2252 245 20223 |
| 0.047 µF | 50 | 15 | A473M15Z5UF5TAA | 2252 245 20473 |
| 0.1 µF | 25 | 15 | A104M15Z5UE5TAA | 2252 242 20104 |
| | 50 | 15 | A104M15Z5UF5TAA | 2252 245 20104 |
| | 100 | 20 | A104M20Z5UH5TAA | 2252 246 40104 |
| 0.22 µF | 50 | 20 | A224M20Z5UF5TAA | 2252 245 40224 |
| 0.47 µF | 50 | 20 | A474M20Z5UF5TAA | 2252 245 40474 |
| **Y5V +80/–20% tolerance** | | | | |
| 0.01 µF | 50 | 15 | A103Z15Y5VF5TAA | 2252 265 20103 |
| 0.022 µF | 50 | 15 | A223Z15Y5VF5TAA | 2252 265 20223 |
| 0.047 µF | 50 | 15 | A473Z15Y5VF5TAA | 2252 265 20473 |
| 0.1 µF | 25 | 15 | A104Z15Y5VE5TAA | 2252 262 20104 |
| | 50 | 15 | A104Z15Y5VF5TAA | 2252 265 20104 |
| 0.22 µF | 25 | 15 | A224Z15Y5VE5TAA | 2252 262 20224 |
| | 50 | 20 | A224Z20Y5VF5TAA | 2252 265 40224 |
| 0.47 µF | 25 | 20 | A474Z20Y5VE5TAA | 2252 262 40474 |
| | 50 | 20 | A474Z20Y5VF5TAA | 2252 265 40474 |
| 1.0 µF | 25 | 20 | A105Z20Y5VE5TAA | 2252 262 40105 |

## ELECTRICAL CHARACTERISTICS

**Table 3** Electrical data for NP0, X7R, Z5U and Y5V; also conditions for Tables 5, 6 and 7

The capacitors meet the essential requirements of *"EIA198"*.

Unless stated otherwise all electrical values apply at an ambient temperature of 25 ±3 °C, at barometric pressures of 650 to 800 mm of mercury, and relative humidity not to exceed 75%.

| DESCRIPTION | VALUE |
|---|---|
| **Capacitors with temperature coefficient NP0** | |
| Capacitance range: | |
| at 1 MHz, 1 V; where C ≤ 1000 pF | 10 to 1000 pF |
| at 1 kHz, 1 V; where C > 1000 pF | 1200 to 3300 pF |
| Tolerance on the capacitance | ±5%; ±10% |
| Rated DC voltage | 50 and 100 V |
| Dielectric strength | 250% of rated voltage |
| Insulation resistance at rated voltage | 100000 MΩ or 1000 MΩ × μF, whichever is less at 25 °C |
| Temperature coefficient of the capacitance | $0 \times 10^{-6}$/K |
| Tolerance on the temperature coefficient | $\pm 30 \times 10^{-6}$/K |
| Dissipation factor: | |
| at 1 MHz, 1 V; where C ≤ 30 pF | $\frac{1}{(400 + 20 \times C)}$ |
| at 1 kHz, 1 V; where C > 30 pF | $< 15 \times 10^{-4}$ |
| Operating temperature range | −55 to +125 °C |
| Storage temperature range | −55 to +85 °C |
| **Capacitors with temperature coefficient X7R** | |
| Capacitance range at 1 kHz, 1 V | 220 pF to 0.22 μF |
| Tolerance on the capacitance | ±10%; ±20% |
| Maximum capacitance change with respect to capacitance value at 25 °C | ±15% |
| Rated DC voltage | 25 V, 50 V and 100 V |
| Dielectric strength | 250% of rated voltage |
| Insulation resistance at rated voltage | 100000 MΩ or 1000 MΩ × μF, whichever is less at 25 °C |
| Dissipation factor at 1 kHz, 1 V | ≤2.5% |
| Operating temperature range | −55 to +125 °C |
| Storage temperature range | −55 to +85 °C |
| Ageing | typical 1% per time decade |

# Leaded ceramic multilayer capacitors Mono-axial™ series

| DESCRIPTION | VALUE |
|---|---|
| **Capacitors with temperature coefficient Z5U** | |
| Capacitance range at 1 kHz, 0.5 V | 1000 pF to 0.47 μF |
| Tolerance on the capacitance | ±20%; +80%/–20% |
| Maximum capacitance change with respect to capacitance value at 25 °C | +22%/–56% |
| Rated DC voltage | 25, 50 and 100 V |
| Dielectric strength | 250% of rated voltage |
| Insulation resistance at rated voltage | 10000 MΩ or 1000 MΩ × μF, whichever is less at 25 °C |
| Dissipation factor at 1 kHz, 0.5 V | ≤4% |
| Operating temperature range | 10 to 85 °C |
| Storage temperature range | –55 to +85 °C |
| Ageing | typical 6% per time decade |
| **Capacitors with temperature coefficient Y5V** | |
| Capacitance range at 1 kHz, 1 V | 0.01 to 1.0 μF |
| Tolerance on the capacitance | +80%/–20% |
| Maximum capacitance change with respect to capacitance value at 25 °C | +22%/–56% |
| Rated DC voltage | 25 V and 50 V |
| Dielectric strength | 250% of rated voltage |
| Insulation resistance at rated voltage | 10000 MΩ or 1000 MΩ × μF, whichever is less at 25 °C |
| Dissipation factor at 1 kHz, 1 V | ≤5% |
| Operating temperature range | –30 to +85 °C |
| Storage temperature range | –55 to +85 °C |
| Ageing | typical 6% per time decade |

## CROSS REFERENCE INFORMATION FOR 2222 SERIES

**Table 4** Catalogue numbers for 2222 series; see Tables 5, 6 and 7

| CAPACITANCE TOLERANCE | CATALOGUE NUMBERS(1) | | | | | |
|---|---|---|---|---|---|---|
| | 2222 740 ..... | | 2222 741 ..... | | 2222 742 ..... | |
| | NP0 | | X7R | | Z5U | |
| | $U_R$ = 50 V (DC) | $U_R$ = 100 V (DC) | $U_R$ = 50 V (DC) | $U_R$ = 100 V (DC) | $U_R$ = 50 V (DC) | $U_R$ = 100 V (DC) |
| ±5% | 09... | 41... | – | – | – | – |
| ±10% | 10... | 42... | 10... | 42... | – | – |
| ±20% | – | – | 11... | 43... | 11... | 43... |
| +80%/–20% | – | – | – | – | 12... | 44... |

**Note**

1. The first 2 digits of the remaining 5-digit suffix are given here; catalogue numbers to be completed by adding the 3-digit suffix for required series and capacitance (see Tables 5, 6 and 7).

**Table 5** Range of values for **NP0**, 2222 740 .....; see Table 3 for conditions

| CAPACITANCE VALUE (pF) | SIZE (see Table 1) | | SUFFIX OF CATALOGUE NUMBER (see Table 4) |
|---|---|---|---|
| | $U_R$ = 50 V (DC) | $U_R$ = 100 V (DC) | |
| 10 | 15 | 15 | 109 |
| 12 | 15 | 15 | 129 |
| 15 | 15 | 15 | 159 |
| 18 | 15 | 15 | 189 |
| 22 | 15 | 15 | 229 |
| 27 | 15 | 15 | 279 |
| 33 | 15 | 15 | 339 |
| 39 | 15 | 15 | 399 |
| 47 | 15 | 15 | 479 |
| 56 | 15 | 15 | 569 |
| 68 | 15 | 15 | 689 |
| 82 | 15 | 15 | 829 |
| 100 | 15 | 15 | 101 |
| 120 | 15 | 15 | 121 |
| 150 | 15 | 15 | 151 |
| 180 | 15 | 15 | 181 |
| 220 | 15 | 15 | 221 |
| 270 | 15 | 15 | 271 |
| 330 | 15 | 15 | 331 |
| 390 | 15 | 15 | 391 |
| 470 | 15 | 15 | 471 |
| 560 | 15 | 15 | 561 |
| 680 | 15 | 15 | 681 |
| 820 | 15 | 15 | 821 |
| 1000 | 15 | 20 | 102 |
| 1200 | 20 | 20 | 122 |
| 1500 | 20 | 20 | 152 |
| 1800 | 20 | 20 | 182 |
| 2200 | 20 | 20 | 222 |
| 2700 | 20 | 20 | 272 |
| 3300 | 20 | 29 | 332 |
| 3900 | 29 | 29 | 392 |
| 4700 | 29 | 29 | 472 |
| 5600 | 29 | – | 562 |
| 6800 | 29 | – | 682 |

**Table 6** Range of values for **X7R**, 2222 741 .....; see Table 3 for conditions

| CAPACITANCE VALUE (pF) | SIZE (see Table 1) | | SUFFIX OF CATALOGUE NUMBER (see Table 4) |
|---|---|---|---|
| | $U_R$ = 50 V (DC) | $U_R$ = 100 V (DC) | |
| 220 | 15 | 15 | 221 |
| 270 | 15 | 15 | 271 |
| 330 | 15 | 15 | 331 |
| 390 | 15 | 15 | 391 |
| 470 | 15 | 15 | 471 |
| 560 | 15 | 15 | 561 |
| 680 | 15 | 15 | 681 |
| 820 | 15 | 15 | 821 |
| 1000 | 15 | 15 | 102 |
| 1200 | 15 | 15 | 122 |
| 1500 | 15 | 15 | 152 |
| 1800 | 15 | 15 | 182 |
| 2200 | 15 | 15 | 222 |
| 2700 | 15 | 15 | 272 |
| 3300 | 15 | 15 | 332 |
| 3900 | 15 | 15 | 392 |
| 4700 | 15 | 15 | 472 |
| 5600 | 15 | 15 | 562 |
| 6800 | 15 | 15 | 682 |
| 8200 | 15 | 15 | 822 |
| 10000 | 15 | 15 | 103 |
| 12000 | 15 | 20 | 123 |
| 15000 | 15 | 20 | 153 |
| 18000 | 15 | 20 | 183 |
| 22000 | 15 | 20 | 223 |
| 27000 | 15 | 20 | 273 |
| 33000 | 15 | 20 | 333 |
| 39000 | 15 | 20 | 393 |
| 47000 | 15 | 20 | 473 |
| 56000 | 20 | 20 | 563 |
| 68000 | 20 | 20 | 683 |
| 82000 | 20 | 20 | 823 |
| 100000 | 20 | 20 | 104 |
| 120000 | 29 | 29 | 124 |
| 150000 | 29 | – | 154 |
| 180000 | 29 | – | 184 |
| 220000 | 29 | – | 224 |

**Table 7** Range of values for **Z5U**, 2222 742 .....; see Table 3 for conditions

| CAPACITANCE VALUE (pF) | SIZE (see Table 1) | | SUFFIX OF CATALOGUE NUMBER (see Table 4) |
|---|---|---|---|
| | $U_R$ = 50 V (DC) | $U_R$ = 100 V (DC) | |
| 1000 | 15 | 15 | 102 |
| 1200 | 15 | 15 | 122 |
| 1500 | 15 | 15 | 152 |
| 1800 | 15 | 15 | 182 |
| 2200 | 15 | 15 | 222 |
| 2700 | 15 | 15 | 272 |
| 3300 | 15 | 15 | 332 |
| 3900 | 15 | 15 | 392 |
| 4700 | 15 | 15 | 472 |
| 5600 | 15 | 15 | 562 |
| 6800 | 15 | 15 | 682 |
| 8200 | 15 | 15 | 822 |
| 10000 | 15 | 15 | 103 |
| 12000 | 15 | 20 | 123 |
| 15000 | 15 | 20 | 153 |
| 18000 | 15 | 20 | 183 |
| 22000 | 15 | 20 | 223 |
| 27000 | 15 | 20 | 273 |
| 33000 | 15 | 20 | 333 |
| 39000 | 15 | 20 | 393 |
| 47000 | 15 | 20 | 473 |
| 56000 | 15 | 20 | 563 |
| 68000 | 15 | 20 | 683 |
| 82000 | 15 | 20 | 823 |
| 100000 | 15 | 20 | 104 |
| 120000 | 20 | – | 124 |
| 150000 | 20 | – | 154 |
| 180000 | 20 | – | 184 |
| 220000 | 20 | – | 224 |
| 270000 | 20 | – | 274 |
| 330000 | 20 | – | 334 |
| 390000 | 20 | – | 394 |
| 470000 | 20 | – | 474 |

# Leaded ceramic multilayer capacitors Mono-kap™ series

## FEATURES

- Very high capacitance per unit volume
- Low cost.

## APPLICATIONS

These conformally coated radial leaded capacitors are designed for commercial and industrial applications in four dielectrics, NP0 (ultra-stable), X7R (stable) and Z5U, Y5V (general purpose). Applications include timing, coupling/decoupling, signal comparison and biasing. Mono-kap™ capacitors are suitable for automatic insertion equipment.

## DESCRIPTION

The basic capacitor construction consists of ceramic dielectric materials processed into a tape with a typical thickness range from 0.025 to 0.076 mm. Metal electrode patterns are applied using a thick film screening process. Multiple layers are stacked and laminated in such a manner that electrodes are alternately exposed when the pattern is cut into individual chip capacitors. The capacitors are fired through a high temperature profile to mature the ceramic and metal into a homogeneous unit.

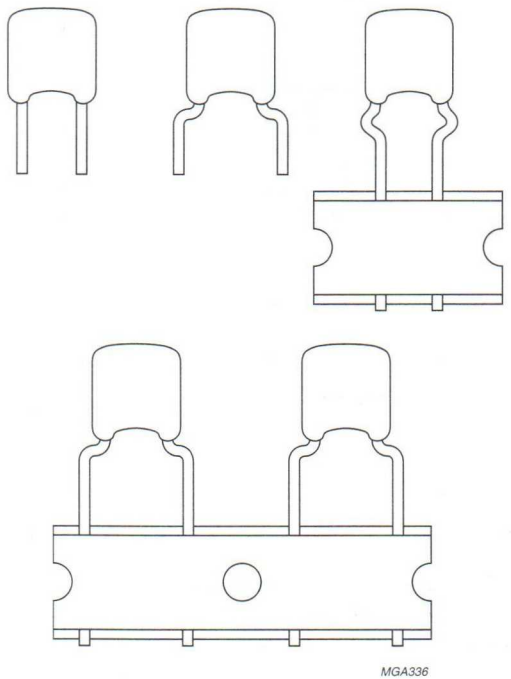


Fig.1 Component outlines.

Metal end terminations are applied and fired to provide electrical connection between the individual layers. Tinned leads are attached using a solder.

Encapsulation consists of a moisture-resistant gold colour conformal epoxy coating that meets the flame requirements of *"UL94V-0"*.

## QUICK REFERENCE DATA

| DESCRIPTION | VALUE | | | | | | | |
|---|---|---|---|---|---|---|---|---|
| | **2252 305 .....** | **2252 306 .....** | **2252 325 .....** | **2252 326 .....** | **2252 345 .....** | **2252 346 .....** | **2252 362 .....** | **2252 365 .....** |
| Capacitance range | 10 pF to 0.022 μF | | 100 pF to 1.0 μF | | 1000 pF to 2.2 μF | | 0.01 to 1.0 μF | |
| Rated DC voltage | 50 V | 100 V | 50 V | 100 V | 50 V | 100 V | 25 V | 50 V |
| Tolerance on capacitance | ±5% | | ±10% | | ±20%; +80%/–20% | | +80%/–20% | |
| Temperature coefficient | NP0 (C0G) | | X7R | | Z5U | | Y5V | |

## MECHANICAL DATA

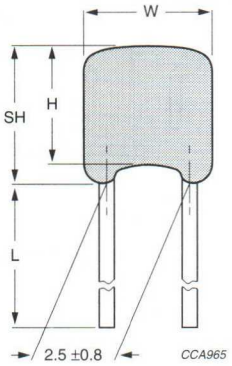


Dimensions in mm.

Fig.2 Component outline for lead spacing 2.5 ±0.8 mm (straight wires).

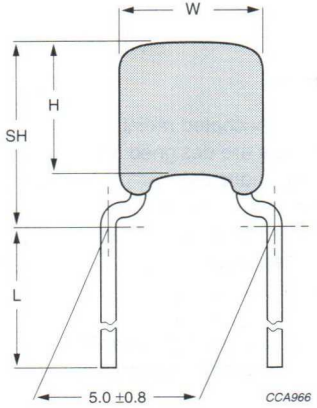


Dimensions in mm.

Fig.3 Component outline for lead spacing 5.0 ±0.8 mm (flat bent wires).

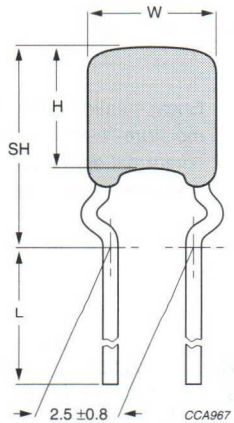


Dimensions in mm.

Fig.4 Component outline for lead spacing 2.5 ±0.8 mm (outside kink wires).

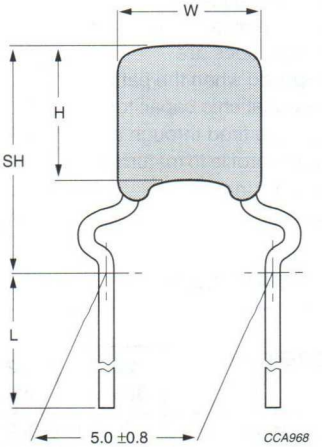


Dimensions in mm.
Lead style available on request.

Fig.5 Component outline for lead spacing 5.0 ±0.8 mm (outside kink wires).

### Physical dimensions

**Table 1** Capacitor dimensions and mass; notes 1 and 2

| SIZE CODE | $W_{max}$ (mm) | $H_{max}$ (mm) | $T_{max}$[3] (mm) | MAX. SEATING HEIGHT (SH) (mm) | | | | MASS (g) |
|---|---|---|---|---|---|---|---|---|
| | | | | Fig.2 | Fig.3 | Fig.4 | Fig.5 | |
| 15 | 4.0 (0.15) | 4.0 (0.15) | 2.5 (0.100) | 5.58 (0.220) | 6.50 (0.256) | 7.50 (0.295) | 7.50 (0.295) | ≈0.15 |
| 20 | 5.0 (0.20) | 5.0 (0.20) | 3.2 (0.13) | 6.58 (0.259) | 7.50 (0.295) | 8.50 (0.335) | 8.50 (0.335) | ≈0.16 |
| 30 | 7.5 (0.30) | 7.5 (0.30) | 3.8 (0.15) | 9.08 (0.357) | 10.70 (0.421) | 11.00 (0.433) | 11.0 (0.433) | ≈0.42 |

**Notes**

1. Bulk packed products have a standard lead length L ≥ 25.4 mm.
2. Dimensions between the parentheses are in inches.
3. Thickness defined as T.

**Marking**[1][2] (see Fig.6)

Capacitance code (**CCC**):

10 pF to 99 pF;
actual value in pF (2 digits only)

100 pF and above;
coded capacitance value
(same as used in P/N).

Capacitance tolerance (**T**):

Standard EIA tolerance.

Material code (**M**):

A = NP0 (C0G)

C = X7R

E = Z5U

Y = Y5V.

Voltage code (**V**):

1 = 100 V

3 = 25 V

5 = 50 V.

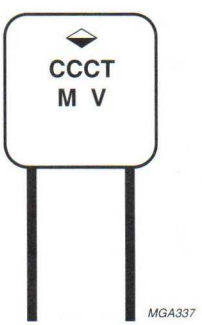


Fig.6 Markings on the body.

(1) 100 pF and above in size code 15 are marked without capacitance tolerance code (T).

(2) Only size code 30 and above are marked with the material code (M) and voltage code (V).

### PACKAGING

For details refer to this handbook, Section *"Leaded ceramic multilayer capacitors"*, Chapter *"Packaging"*.

## ORDERING INFORMATION (preferred types)

**Table 2** Capacitance, rated voltage, mechanical dimensions and ordering information; note 1

| C | $U_{R(DC)}$ (V) | LEAD SPACING | SIZE CODE | CLEAR TEXT CODE | PACKAGING CODE 8th AND 9th DIGIT | | | CATALOGUE NUMBER (2)(3) |
|---|---|---|---|---|---|---|---|---|
| | | | | 13th DIGIT: T = REEL; U = AMMO; 3 = BULK | REEL | AMMO | BULK | |
| **NP0 (C0G) ±5% tolerance** | | | | | | | | |
| 10 pF | 50 | 5.0 | 15 | K100J15C0GF5.H5 | 10 | 12 | 08 | 2252 305..109 |
| | | 2.5 | | K100J15C0GF5.L2 | 02 | 03 | 00 | 2252 305..109 |
| | 100 | 5.0 | 15 | K100J15C0GH5.H5 | 10 | 12 | 08 | 2252 306..109 |
| | | 2.5 | | K100J15C0GH5.L2 | 02 | 03 | 00 | 2252 306..109 |
| 12 pF | 50 | 5.0 | 15 | K120J15C0GF5.H5 | 10 | 12 | 08 | 2252 305..129 |
| | | 2.5 | | K120J15C0GF5.L2 | 02 | 03 | 00 | 2252 305..129 |
| 15 pF | 50 | 5.0 | 15 | K150J15C0GF5.H5 | 10 | 12 | 08 | 2252 305..159 |
| | | 2.5 | | K150J15C0GF5.L2 | 02 | 03 | 00 | 2252 305..159 |
| 18 pF | 50 | 5.0 | 15 | K180J15C0GF5.H5 | 10 | 12 | 08 | 2252 305..189 |
| | | 2.5 | | K180J15C0GF5.L2 | 02 | 03 | 00 | 2252 305..189 |
| 22 pF | 50 | 5.0 | 15 | K220J15C0GF5.H5 | 10 | 12 | 08 | 2252 305..229 |
| | | 2.5 | | K220J15C0GF5.L2 | 02 | 03 | 00 | 2252 305..229 |
| | 100 | 5.0 | 15 | K220J15C0GH5.H5 | 10 | 12 | 08 | 2252 306..229 |
| | | 2.5 | | K220J15C0GH5.L2 | 02 | 03 | 00 | 2252 306..229 |
| 27 pF | 50 | 5.0 | 15 | K270J15C0GF5.H5 | 10 | 12 | 08 | 2252 305..279 |
| | | 2.5 | | K270J15C0GF5.L2 | 02 | 03 | 00 | 2252 305..279 |
| 33 pF | 50 | 5.0 | 15 | K330J15C0GF5.H5 | 10 | 12 | 08 | 2252 305..339 |
| | | 2.5 | | K330J15C0GF5.L2 | 02 | 03 | 00 | 2252 305..339 |
| 39 pF | 50 | 5.0 | 15 | K390J15C0GF5.H5 | 10 | 12 | 08 | 2252 305..399 |
| | | 2.5 | | K390J15C0GF5.L2 | 02 | 03 | 00 | 2252 305..399 |
| 47 pF | 50 | 5.0 | 15 | K470J15C0GF5.H5 | 10 | 12 | 08 | 2252 305..479 |
| | | 2.5 | | K470J15C0GF5.L2 | 02 | 03 | 00 | 2252 305..479 |
| | 100 | 5.0 | 15 | K470J15C0GH5.H5 | 10 | 12 | 08 | 2252 306..479 |
| | | 2.5 | | K470J15C0GH5.L2 | 02 | 03 | 00 | 2252 306..479 |
| 56 pF | 50 | 5.0 | 15 | K560J15C0GF5.H5 | 10 | 12 | 08 | 2252 305..569 |
| | | 2.5 | | K560J15C0GF5.L2 | 02 | 03 | 00 | 2252 305..569 |
| 68 pF | 50 | 5.0 | 15 | K680J15C0GF5.H5 | 10 | 12 | 08 | 2252 305..689 |
| | | 2.5 | | K680J15C0GF5.L2 | 02 | 03 | 00 | 2252 305..689 |
| 82 pF | 50 | 5.0 | 15 | K820J15C0GF5.H5 | 10 | 12 | 08 | 2252 305..829 |
| | | 2.5 | | K820J15C0GF5.L2 | 02 | 03 | 00 | 2252 305..829 |

# Leaded ceramic multilayer capacitors Mono-kap™ series

| C | $U_{R(DC)}$ (V) | LEAD SPACING | SIZE CODE | CLEAR TEXT CODE | PACKAGING CODE 8th AND 9th DIGIT | | | CATALOGUE NUMBER (2)(3) |
|---|---|---|---|---|---|---|---|---|
| | | | | 13th DIGIT: T = REEL; U = AMMO; 3 = BULK | REEL | AMMO | BULK | |
| 100 pF | 50 | 5.0 | 15 | K101J15C0GF5.H5 | 10 | 12 | 08 | 2252 305..101 |
| | | 2.5 | | K101J15C0GF5.L2 | 02 | 03 | 00 | 2252 305..101 |
| | 100 | 5.0 | 15 | K101J15C0GH5.H5 | 10 | 12 | 08 | 2252 306..101 |
| | | 2.5 | | K101J15C0GH5.L2 | 02 | 03 | 00 | 2252 306..101 |
| 150 pF | 50 | 5.0 | 15 | K151J15C0GF5.H5 | 10 | 12 | 08 | 2252 305..151 |
| | | 2.5 | | K151J15C0GF5.L2 | 02 | 03 | 00 | 2252 305..151 |
| 220 pF | 50 | 5.0 | 15 | K221J15C0GF5.H5 | 10 | 12 | 08 | 2252 305..221 |
| | | 2.5 | | K221J15C0GF5.L2 | 02 | 03 | 00 | 2252 305..221 |
| | 100 | 5.0 | 15 | K221J15C0GH5.H5 | 10 | 12 | 08 | 2252 306..221 |
| | | 2.5 | | K221J15C0GH5.L2 | 02 | 03 | 00 | 2252 306..221 |
| 330 pF | 50 | 5.0 | 15 | K331J15C0GF5.H5 | 10 | 12 | 08 | 2252 305..331 |
| | | 2.5 | | K331J15C0GF5.L2 | 02 | 03 | 00 | 2252 305..331 |
| 470 pF | 50 | 5.0 | 15 | K471J15C0GF5.H5 | 10 | 12 | 08 | 2252 305..471 |
| | | 2.5 | | K471J15C0GF5.L2 | 02 | 03 | 00 | 2252 305..471 |
| | 100 | 5.0 | 15 | K471J15C0GH5.H5 | 10 | 12 | 08 | 2252 306..471 |
| | | 2.5 | | K471J15C0GH5.L2 | 02 | 03 | 00 | 2252 306..471 |
| 680 pF | 50 | 5.0 | 15 | K681J15C0GF5.H5 | 10 | 12 | 08 | 2252 305..681 |
| | | 2.5 | | K681J15C0GF5.L2 | 02 | 03 | 00 | 2252 305..681 |
| 1000 pF | 50 | 5.0 | 15 | K102J15C0GF5.H5 | 10 | 12 | 08 | 2252 305..102 |
| | | 2.5 | | K102J15C0GF5.L2 | 02 | 03 | 00 | 2252 305..102 |
| | 100 | 5.0 | 20 | K102J20C0GH5.H5 | 24 | 26 | 22 | 2252 306..102 |
| | | 2.5 | | K102J20C0GH5.L2 | 16 | 17 | 14 | 2252 306..102 |
| 1500 pF | 50 | 5.0 | 20 | K152J20C0GF5.H5 | 24 | 26 | 22 | 2252 305..152 |
| 2200 pF | 50 | 5.0 | 20 | K222J20C0GF5.H5 | 24 | 26 | 22 | 2252 305..222 |
| 3300 pF | 50 | 5.0 | 20 | K332J20C0GF5.H5 | 24 | 26 | 22 | 2252 305..332 |
| 4700 pF | 50 | 5.0 | 20 | K472J20C0GF5.H5 | 24 | 26 | 22 | 2252 305..472 |
| 6800 pF | 50 | 5.0 | 30 | K682J30C0GF5.H5 | 48 | 50 | 46 | 2252 305..682 |
| 0.01 µF | 50 | 5.0 | 30 | K103J30C0GF5.H5 | 48 | 50 | 46 | 2252 305..103 |

# Leaded ceramic multilayer capacitors Mono-kap™ series

| C | $U_{R(DC)}$ (V) | LEAD SPACING | SIZE CODE | CLEAR TEXT CODE | PACKAGING CODE 8th AND 9th DIGIT | | | CATALOGUE NUMBER (2)(3) |
|---|---|---|---|---|---|---|---|---|
| | | | | 13th DIGIT: T = REEL; U = AMMO; 3 = BULK | REEL | AMMO | BULK | |
| **X7R ±10% tolerance** | | | | | | | | |
| 220 pF | 50 | 5.0 | 15 | K221K15X7RF5.H5 | 10 | 12 | 08 | 2252 325..221 |
| | | 2.5 | | K221K15X7RF5.L2 | 02 | 03 | 00 | 2252 325..221 |
| | 100 | 5.0 | 15 | K221K15X7RH5.H5 | 10 | 12 | 08 | 2252 326..221 |
| | | 2.5 | | K221K15X7RH5.L2 | 02 | 03 | 00 | 2252 326..221 |
| 330 pF | 50 | 5.0 | 15 | K331K15X7RF5.H5 | 10 | 12 | 08 | 2252 325..331 |
| | | 2.5 | | K331K15X7RF5.L2 | 02 | 03 | 00 | 2252 325..331 |
| 470 pF | 50 | 5.0 | 15 | K471K15X7RF5.H5 | 10 | 12 | 08 | 2252 325..471 |
| | | 2.5 | | K471K15X7RF5.L2 | 02 | 03 | 00 | 2252 325..471 |
| | 100 | 5.0 | 15 | K471K15X7RH5.H5 | 10 | 12 | 08 | 2252 326..471 |
| | | 2.5 | | K471K15X7RH5.L2 | 02 | 03 | 00 | 2252 326..471 |
| 680 pF | 50 | 5.0 | 15 | K681K15X7RF5.H5 | 10 | 12 | 08 | 2252 325..681 |
| | | 2.5 | | K681K15X7RF5.L2 | 02 | 03 | 00 | 2252 325..681 |
| 1000 pF | 50 | 5.0 | 15 | K102K15X7RF5.H5 | 10 | 12 | 08 | 2252 325..102 |
| | | 2.5 | | K102K15X7RF5.L2 | 02 | 03 | 00 | 2252 325..102 |
| | 100 | 5.0 | 15 | K102K15X7RH5.H5 | 10 | 12 | 08 | 2252 326..102 |
| | | 2.5 | | K102K15X7RH5.L2 | 02 | 03 | 00 | 2252 326..102 |
| 1500 pF | 50 | 5.0 | 15 | K152K15X7RF5.H5 | 10 | 12 | 08 | 2252 325..152 |
| | | 2.5 | | K152K15X7RF5.L2 | 02 | 03 | 00 | 2252 325..152 |
| 2200 pF | 50 | 5.0 | 15 | K222K15X7RF5.H5 | 10 | 12 | 08 | 2252 325..222 |
| | | 2.5 | | K222K15X7RF5.L2 | 02 | 03 | 00 | 2252 325..222 |
| | 100 | 5.0 | 15 | K222K15X7RH5.H5 | 10 | 12 | 08 | 2252 326..222 |
| | | 2.5 | | K222K15X7RH5.L2 | 02 | 03 | 00 | 2252 326..222 |
| 3300 pF | 50 | 5.0 | 15 | K332K15X7RF5.H5 | 10 | 12 | 08 | 2252 325..332 |
| | | 2.5 | | K332K15X7RF5.L2 | 02 | 03 | 00 | 2252 325..332 |
| 4700 pF | 50 | 5.0 | 15 | K472K15X7RF5.H5 | 10 | 12 | 08 | 2252 325..472 |
| | | 2.5 | | K472K15X7RF5.L2 | 02 | 03 | 00 | 2252 325..472 |
| | 100 | 5.0 | 15 | K472K15X7RH5.H5 | 10 | 12 | 08 | 2252 326..472 |
| | | 2.5 | | K472K15X7RH5.L2 | 02 | 03 | 00 | 2252 326..472 |
| 6800 pF | 50 | 5.0 | 15 | K682K15X7RF5.H5 | 10 | 12 | 08 | 2252 325..682 |
| | | 2.5 | | K682K15X7RF5.L2 | 02 | 03 | 00 | 2252 325..682 |
| 0.01 µF | 50 | 5.0 | 15 | K103K15X7RF5.H5 | 10 | 12 | 08 | 2252 325..103 |
| | | 2.5 | | K103K15X7RF5.L2 | 02 | 03 | 00 | 2252 325..103 |
| | 100 | 5.0 | 15 | K103K15X7RH5.H5 | 10 | 12 | 08 | 2252 326..103 |
| | | 2.5 | | K103K15X7RH5.L2 | 02 | 03 | 00 | 2252 326..103 |
| 0.015 µF | 50 | 5.0 | 15 | K153K15X7RF5.H5 | 10 | 12 | 08 | 2252 325..153 |
| | | 2.5 | | K153K15X7RF5.L2 | 02 | 03 | 00 | 2252 325..153 |

| C | $U_{R(DC)}$ (V) | LEAD SPACING | SIZE CODE | CLEAR TEXT CODE | PACKAGING CODE 8th AND 9th DIGIT | | | CATALOGUE NUMBER (2)(3) |
|---|---|---|---|---|---|---|---|---|
| | | | | 13th DIGIT: T = REEL; U = AMMO; 3 = BULK | REEL | AMMO | BULK | |
| 0.022 µF | 50 | 5.0 | 15 | K223K15X7RF5.H5 | 10 | 12 | 08 | 2252 325..223 |
| | | 2.5 | | K223K15X7RF5.L2 | 02 | 03 | 00 | 2252 325..223 |
| | 100 | 5.0 | 20 | K223K20X7RH5.H5 | 24 | 26 | 22 | 2252 326..223 |
| | | 2.5 | | K223K20X7RH5.L2 | 16 | 17 | 14 | 2252 326..223 |
| 0.033 µF | 50 | 5.0 | 15 | K333K15X7RF5.H5 | 10 | 12 | 08 | 2252 325..333 |
| | | 2.5 | | K333K15X7RF5.L2 | 02 | 03 | 00 | 2252 325..333 |
| 0.047 µF | 50 | 5.0 | 15 | K473K15X7RF5.H5 | 10 | 12 | 08 | 2252 325..473 |
| | | 2.5 | | K473K15X7RF5.L2 | 02 | 03 | 00 | 2252 325..473 |
| | 100 | 5.0 | 20 | K473K20X7RH5.H5 | 24 | 26 | 22 | 2252 326..473 |
| | | 2.5 | | K473K20X7RH5.L2 | 16 | 17 | 14 | 2252 326..473 |
| 0.068 µF | 50 | 5.0 | 20 | K683K20X7RF5.H5 | 24 | 26 | 22 | 2252 325..683 |
| | | 2.5 | | K683K20X7RF5.L2 | 16 | 17 | 14 | 2252 325..683 |
| 0.1 µF | 50 | 5.0 | 20 | K104K20X7RF5.H5 | 24 | 26 | 22 | 2252 325..104 |
| | | 2.5 | | K104K20X7RF5.L2 | 16 | 17 | 14 | 2252 325..104 |
| | 100 | 5.0 | 20 | K104K20X7RH5.H5 | 24 | 26 | 22 | 2252 326..104 |
| | | 2.5 | | K104K20X7RH5.L2 | 16 | 17 | 14 | 2252 326..104 |
| 0.15 µF | 50 | 5.0 | 20 | K154K20X7RF5.H5 | 24 | 26 | 22 | 2252 325..154 |
| 0.22 µF | 50 | 5.0 | 20 | K224K20X7RF5.H5 | 24 | 26 | 22 | 2252 325..224 |
| 0.33 µF | 50 | 5.0 | 30 | K334K30X7RF5.H5 | 48 | 50 | 46 | 2252 325..334 |
| 0.47 µF | 50 | 5.0 | 30 | K474K30X7RF5.H5 | 48 | 50 | 46 | 2252 325..474 |
| 0.68 µF | 50 | 5.0 | 30 | K684K30X7RF5.H5 | 48 | 50 | 46 | 2252 325..684 |
| 1.0 µF | 50 | 5.0 | 30 | K105K30X7RF5.H5 | 48 | 50 | 46 | 2252 325..105 |
| **Z5U ±20% tolerance** | | | | | | | | |
| 0.01 µF | 50 | 5.0 | 15 | K103M15Z5UF5.H5 | 10 | 12 | 08 | 2252 345..103 |
| | | 2.5 | | K103M15Z5UF5.L2 | 02 | 03 | 00 | 2252 345..103 |
| | 100 | 5.0 | 15 | K103M15Z5UH5.H5 | 10 | 12 | 08 | 2252 346..103 |
| | | 2.5 | | K103M15Z5UH5.L2 | 02 | 03 | 00 | 2252 346..103 |
| 0.022 µF | 50 | 5.0 | 15 | K223M15Z5UF5.H5 | 10 | 12 | 08 | 2252 345..223 |
| | | 2.5 | | K223M15Z5UF5.L2 | 02 | 03 | 00 | 2252 345..223 |
| 0.047 µF | 50 | 5.0 | 15 | K473M15Z5UF5.H5 | 10 | 12 | 08 | 2252 345..473 |
| | | 2.5 | | K473M15Z5UF5.L2 | 02 | 03 | 00 | 2252 345..473 |

# Leaded ceramic multilayer capacitors Mono-kap™ series

| C | $U_{R(DC)}$ (V) | LEAD SPACING | SIZE CODE | CLEAR TEXT CODE | PACKAGING CODE 8th AND 9th DIGIT | | | CATALOGUE NUMBER (2)(3) |
|---|---|---|---|---|---|---|---|---|
| | | | | 13th DIGIT: T = REEL; U = AMMO; 3 = BULK | REEL | AMMO | BULK | |
| 0.1 µF | 50 | 5.0 | 15 | K104M15Z5UF5.H5 | 10 | 12 | 08 | 2252 345..104 |
| | | 2.5 | | K104M15Z5UF5.L2 | 02 | 03 | 00 | 2252 345..104 |
| | 100 | 5.0 | 20 | K104M20Z5UH5.H5 | 24 | 26 | 22 | 2252 346..104 |
| | | 2.5 | | K104M20Z5UH5.L2 | 16 | 17 | 14 | 2252 346..104 |
| 0.15 µF | 50 | 5.0 | 15 | K154M15Z5UF5.H5 | 10 | 12 | 08 | 2252 345..154 |
| | | 2.5 | | K154M15Z5UF5.L2 | 02 | 03 | 00 | 2252 345..154 |
| 0.22 µF | 50 | 5.0 | 15 | K224M15Z5UF5.H5 | 10 | 12 | 08 | 2252 345..224 |
| | | 2.5 | | K224M15Z5UF5.L2 | 02 | 03 | 00 | 2252 345..224 |
| 0.33 µF | 50 | 5.0 | 20 | K334M20Z5UF5.H5 | 24 | 26 | 22 | 2252 345..334 |
| 0.47 µF | 50 | 5.0 | 20 | K474M20Z5UF5.H5 | 24 | 26 | 22 | 2252 345..474 |
| 0.68 µF | 50 | 5.0 | 30 | K684M30Z5UF5.H5 | 48 | 50 | 46 | 2252 345..684 |
| 1.0 µF | 50 | 5.0 | 30 | K105M30Z5UF5.H5 | 48 | 50 | 46 | 2252 345..105 |
| **Y5V +80/–20% tolerance** | | | | | | | | |
| 0.1 µF | 25 | 5.0 | 15 | K104Z15Y5VE5.H5 | 10 | 12 | 08 | 2252 362..104 |
| | | 2.5 | | K104Z15Y5VE5.L2 | 02 | 03 | 00 | 2252 362..104 |
| | 50 | 5.0 | 15 | K104Z15Y5VF5.H5 | 10 | 12 | 08 | 2252 365..104 |
| | | 2.5 | | K104Z15Y5VF5.L2 | 02 | 03 | 00 | 2252 365..104 |
| 0.22 µF | 25 | 5.0 | 15 | K224Z15Y5VE5.H5 | 10 | 12 | 08 | 2252 362..224 |
| | | 2.5 | | K224Z15Y5VE5.L2 | 02 | 03 | 00 | 2252 362..224 |
| | 50 | 5.0 | 15 | K224Z15Y5VF5.H5 | 10 | 12 | 08 | 2252 365..224 |
| | | 2.5 | | K224Z15Y5VF5.L2 | 02 | 03 | 00 | 2252 365..224 |
| 0.47 µF | 25 | 5.0 | 20 | K474Z20Y5VE5.H5 | 24 | 26 | 22 | 2252 362..474 |
| | | 2.5 | | K474Z20Y5VE5.L2 | 16 | 17 | 14 | 2252 362..474 |
| | 50 | 5.0 | 20 | K474Z20Y5VF5.H5 | 24 | 26 | 22 | 2252 365..474 |
| | | 2.5 | | K474Z20Y5VF5.H5 | 16 | 17 | 14 | 2252 365..474 |
| 1.0 µF | 25 | 5.0 | 20 | K105Z20Y5VE5.H5 | 24 | 26 | 22 | 2252 362..105 |
| | | 2.5 | | K105Z20Y5VE5.L2 | 16 | 17 | 14 | 2252 362..105 |
| | 50 | 5.0 | 20 | K105Z20Y5VF5.H5 | 24 | 26 | 22 | 2252 365..105 |
| | | 2.5 | | K105Z20Y5VF5.L2 | 16 | 17 | 14 | 2252 365..105 |

**Notes**

1. For maximum thickness refer to Table 1.
2. 8th and 9th digit of the catalogue number to be completed with the packaging code.
3. Packaging codes refer to straight leads for F = 2.5 mm and flat bent leads for F = 5.0 mm. Other styles available on request.

## ELECTRICAL CHARACTERISTICS

**Table 3** Electrical data for NP0, X7R, Z5U and Y5V; also conditions for Tables 5, 6 and 7
The capacitors meet the essential requirements of *"IEC 384-8"*, *"IEC 384-9"* and *"EIA198"*.
Unless stated otherwise all electrical values apply at an ambient temperature of 25 ±3 °C, at barometric pressures of 650 to 800 mm of mercury, and relative humidity not to exceed 75%.

| DESCRIPTION | VALUE |
|---|---|
| **Capacitors with temperature coefficient NP0** | |
| Capacitance range:<br>at 1 MHz, 1 V; where C ≤ 1000 pF<br>at 1 kHz, 1 V; where C > 1000 pF | <br>10 to 1000 pF<br>1200 pF to 0.01 μF |
| Tolerance on the capacitance | ±5%, ±10% |
| Rated DC voltage | 50 and 100 V |
| Dielectric strength | 250% of rated voltage |
| Insulation resistance at rated voltage | 100000 MΩ or 1000 MΩ × μF, whichever is less at 25 °C |
| Temperature coefficient of the capacitance | $0 \times 10^{-6}$/K |
| Tolerance on the temperature coefficient | $\pm 30 \times 10^{-6}$/K |
| Dissipation factor:<br>at 1 MHz, 1 V; where C ≤ 30 pF<br>at 1 kHz, 1 V; where C > 30 pF | <br>$< \frac{1}{(400 + 20 \times C)}$<br>$< 15 \times 10^{-4}$ |
| Operating temperature range | −55 to +125 °C |
| Storage temperature range | −55 to +85 °C |
| **Capacitors with temperature coefficient X7R** | |
| Capacitance range at 1 kHz, 1 V | 100 pF to 1.0 μF |
| Tolerance on the capacitance | ±10%, ±20% |
| Maximum capacitance variation with respect to capacitance value at 25 °C | ±15% |
| Rated DC voltage | 50 and 100 V |
| Dielectric strength | 250% of rated voltage |
| Insulation resistance at rated voltage | 100000 MΩ or 1000 MΩ × μF, whichever is less at 25 °C |
| Dissipation factor at 1 kHz, 1 V | ≤2.5% |
| Operating temperature range | −55 to +125 °C |
| Storage temperature range | −55 to +85 °C |
| Ageing | typical 1% per time decade |

| DESCRIPTION | VALUE |
|---|---|
| **Capacitors with temperature coefficient Z5U** | |
| Capacitance range at 1 kHz, 0.5 V | 1000 pF to 2.2 μF |
| Tolerance on the capacitance | ±20%, +80%/–20% |
| Maximum capacitance variation with respect to capacitance value at 25 °C | –56%/+22% |
| Rated DC voltage | 50 and 100 V |
| Dielectric strength | 250% of rated voltage |
| Insulation resistance at rated voltage | 10000 MΩ or 1000 MΩ × μF, whichever is less at 25 °C |
| Dissipation factor at 1 kHz, 0.5 V | ≤4% |
| Operating temperature range | 10 to 85 °C |
| Storage temperature range | –55 to +85 °C |
| Ageing | typical 6% per time decade |
| **Capacitors with temperature coefficient Y5V** | |
| Capacitance range at 1 kHz, 1 V | 0.01 to 1.0 μF |
| Tolerance on the capacitance | +80%/–20% |
| Maximum capacitance variation with respect to capacitance value at 25 °C | –82%/+22% |
| Rated DC voltage | 25 and 50 V |
| Dielectric strength | 250% of rated voltage |
| Insulation resistance at rated voltage | 10000 MΩ or 1000 MΩ × μF, whichever is less at 25 °C |
| Dissipation factor at 1 kHz, 1 V | ≤5% |
| Operating temperature range | 10 to 85 °C |
| Storage temperature range | –55 to +85 °C |
| Ageing | typical 6% per time decade |

## CROSS REFERENCE INFORMATION FOR 2222 SERIES

**Table 4** Catalogue numbers for 2222 series; see Tables 5, 6 and 7

| CAP. TOL. | PITCH[2] P (mm) | LEAD[2] DIA. d (mm) | CATALOGUE NUMBER 2222 73. .....[1] | | | | | | | | |
|---|---|---|---|---|---|---|---|---|---|---|---|
| | | | BULK PACKED | | | ON TAPE ON REEL | | | ON TAPE IN AMMOPACK | | |
| | | | $U_R$ (DC) | | Fig. | $U_R$ (DC) | | Fig. | $U_R$ (DC) | | Fig. |
| | | | 50 V | 100 V | | 50 V | 100 V | | 50 V | 100 V | |
| ±5% | 2.54 (0.1); note 3 | 0.5 (0.020) | 05... | 37... | 2 | 09... | 41... | 4 | 13... | 45... | 4 |
| ±10% | | | 06... | 38... | 2 | 10... | 42... | 4 | 14... | 46... | 4 |
| ±20% | | | 07... | 39... | 2 | 11... | 43... | 4 | 15... | 47... | 4 |
| +80%/–20% | | | 08... | 40... | 2 | 12... | 44... | 4 | 16... | 48... | 4 |
| ±5% | 5.08 (0.2) | 0.5 (0.020) | 17... | 49... | 3 | 21... | 53... | 3 | 25... | 57... | 3 |
| ±10% | | | 18... | 50... | 3 | 22... | 54... | 3 | 26... | 58... | 3 |
| ±20% | | | 19... | 51... | 3 | 23... | 55... | 3 | 27... | 59... | 3 |
| +80%/–20% | | | 20... | 52... | 3 | 24... | 56... | 3 | 28... | 60... | 3 |

**Notes**

1. Catalogue numbers to be completed by adding the 7th digit for the required dielectric and the last 3 digits for the required series and capacitance (see Tables 5, 6 and 7).
2. Dimensions between the parentheses are in inches.
3. Sizes 15 and 20 only.

**Table 5** Range of values for **NP0 (C0G)**, 2222 730 .....; see Table 3 for conditions

| CAPACITANCE VALUE (pF) | SIZE (see Table 1) | | SUFFIX OF CATALOGUE NUMBER (see Table 4) |
|---|---|---|---|
| | $U_R$ = 50 V (DC) | $U_R$ = 100 V (DC) | |
| 10 | 15 | 15 | ..109 |
| 12 | 15 | 15 | ..129 |
| 15 | 15 | 15 | ..159 |
| 18 | 15 | 15 | ..189 |
| 22 | 15 | 15 | ..229 |
| 27 | 15 | 15 | ..279 |
| 33 | 15 | 15 | ..339 |
| 39 | 15 | 15 | ..399 |
| 47 | 15 | 15 | ..479 |
| 56 | 15 | 15 | ..569 |
| 68 | 15 | 15 | ..689 |
| 82 | 15 | 15 | ..829 |
| 100 | 15 | 15 | ..101 |
| 120 | 15 | 15 | ..121 |
| 150 | 15 | 15 | ..151 |
| 180 | 15 | 15 | ..181 |
| 220 | 15 | 15 | ..221 |
| 270 | 15 | 15 | ..271 |
| 330 | 15 | 15 | ..331 |
| 390 | 15 | 15 | ..391 |
| 470 | 15 | 15 | ..471 |
| 560 | 15 | 15 | ..561 |
| 680 | 15 | 15 | ..681 |
| 820 | 15 | 15 | ..821 |
| 1000 | 15 | 20 | ..102 |
| 1200 | 20 | 20 | ..122 |
| 1500 | 20 | 20 | ..152 |
| 1800 | 20 | 20 | ..182 |
| 2200 | 20 | 20 | ..222 |
| 2700 | 20 | 20 | ..272 |
| 3300 | 20 | 20 | ..332 |
| 3900 | 20 | 20 | ..392 |
| 4700 | 20 | 20 | ..472 |
| 5600 | 30 | 30 | ..562 |
| 6800 | 30 | 30 | ..682 |
| 8200 | 30 | 30 | ..822 |
| 10000 | 30 | 30 | ..103 |
| 12000 | 30 | – | ..123 |
| 15000 | 30 | – | ...153 |
| 18000 | 30 | – | ..183 |
| 22000 | 30 | – | ..223 |

**Table 6** Range of values for **X7R**, 2222 731 .....; see Table 3 for conditions

| CAPACITANCE VALUE (pF) | SIZE (see Table 1) | | SUFFIX OF CATALOGUE NUMBER (see Table 4) |
|---|---|---|---|
| | $U_R$ = 50 V (DC) | $U_R$ = 100 V (DC) | |
| 220 | 15 | 15 | ..221 |
| 270 | 15 | 15 | ..271 |
| 330 | 15 | 15 | ..331 |
| 390 | 15 | 15 | ..391 |
| 470 | 15 | 15 | ..471 |
| 560 | 15 | 15 | ..561 |
| 680 | 15 | 15 | ..681 |
| 820 | 15 | 15 | ..821 |
| 1000 | 15 | 15 | ..102 |
| 1200 | 15 | 15 | ..122 |
| 1500 | 15 | 15 | ..152 |
| 1800 | 15 | 15 | ..182 |
| 2200 | 15 | 15 | ..222 |
| 2700 | 15 | 15 | ..272 |
| 3300 | 15 | 15 | ..332 |
| 3900 | 15 | 15 | ..392 |
| 4700 | 15 | 15 | ..472 |
| 5600 | 15 | 15 | ..562 |
| 6800 | 15 | 15 | ..682 |
| 8200 | 15 | 15 | ..822 |
| 10000 | 15 | 15 | ..103 |
| 12000 | 15 | 20 | ..123 |
| 15000 | 15 | 20 | ...153 |
| 18000 | 15 | 20 | ..183 |
| 22000 | 15 | 20 | ..223 |
| 27000 | 15 | 20 | ..273 |
| 33000 | 15 | 20 | ..333 |
| 39000 | 15 | 20 | ..393 |
| 47000 | 15 | 20 | ..473 |
| 56000 | 20 | 20 | ..563 |
| 68000 | 20 | 20 | ..683 |
| 82000 | 20 | 20 | ..823 |
| 100000 | 20 | 20 | ..104 |
| 120000 | 20 | 30 | ..124 |
| 150000 | 20 | 30 | ..154 |
| 180000 | 20 | 30 | ..184 |
| 220000 | 20 | 30 | ..224 |
| 270000 | 30 | 30 | ..274 |

| CAPACITANCE VALUE (pF) | SIZE (see Table 1) | | SUFFIX OF CATALOGUE NUMBER (see Table 4) |
|---|---|---|---|
| | $U_R$ = 50 V (DC) | $U_R$ = 100 V (DC) | |
| 330000 | 30 | 30 | ..334 |
| 390000 | 30 | – | ..394 |
| 470000 | 30 | – | ..474 |
| 560000 | 30 | – | ..564 |
| 680000 | 30 | – | ..684 |
| 820000 | 30 | – | ..824 |
| 1000000 | 30 | – | ..105 |

**Table 7** Range of values for **Z5U**, 2222 733 .....; see Table 3 for conditions

| CAPACITANCE VALUE (pF) | SIZE (see Table 1) | | SUFFIX OF CATALOGUE NUMBER (see Table 4) |
|---|---|---|---|
| | $U_R$ = 50 V (DC) | $U_R$ = 100 V (DC) | |
| 1000 | 15 | 15 | ..102 |
| 1200 | 15 | 15 | ..122 |
| 1500 | 15 | 15 | ..152 |
| 1800 | 15 | 15 | ..182 |
| 2200 | 15 | 15 | ..222 |
| 2700 | 15 | 15 | ..272 |
| 3300 | 15 | 15 | ..332 |
| 3900 | 15 | 15 | ..392 |
| 4700 | 15 | 15 | ..472 |
| 5600 | 15 | 15 | ..562 |
| 6800 | 15 | 15 | ..682 |
| 8200 | 15 | 15 | ..822 |
| 10000 | 15 | 15 | ..103 |
| 12000 | 15 | 20 | ..123 |
| 15000 | 15 | 20 | ..153 |
| 18000 | 15 | 20 | ..183 |
| 22000 | 15 | 20 | ..223 |
| 27000 | 15 | 20 | ..273 |
| 33000 | 15 | 20 | ..333 |
| 39000 | 15 | 20 | ..393 |
| 47000 | 15 | 20 | ..473 |
| 56000 | 15 | 20 | ..563 |
| 68000 | 15 | 20 | ..683 |
| 82000 | 15 | 20 | ..823 |
| 100000 | 15 | 20 | ..104 |
| 120000 | 15 | 30 | ..124 |
| 150000 | 15 | 30 | ..154 |
| 180000 | 15 | 30 | ..184 |
| 220000 | 15 | 30 | ..224 |
| 270000 | 20 | 30 | ..274 |
| 330000 | 20 | 30 | ..334 |
| 390000 | 20 | 30 | ..394 |
| 470000 | 20 | 30 | ..474 |
| 560000 | 30 | – | ..564 |
| 680000 | 30 | – | ..684 |
| 820000 | 30 | – | ..824 |
| 1000000 | 30 | – | ..105 |

# Leaded ceramic multilayer capacitors

## Cross reference selection guide

**Table 1** Mono-kap™ conformal radials **NP0 (C0G)**, 5% and 10% tolerance, **50 V**

| DISTRIBUTION PART NUMBER | 15-DIGIT CODE(1) | 12NC CODE | PITCH |
|---|---|---|---|
| CN 15 C 100 J | K 100 J 15 C0G F VB | 2222 730 05109 | 2.54 |
| CN 15 C 100 K | K 100 K 15 C0G F VB | 2222 730 06109 | 2.54 |
| CN 15 C 120 J | K 120 J 15 C0G F VB | 2222 730 05129 | 2.54 |
| CN 15 C 120 K | K 120 K 15 C0G F VB | 2222 730 06129 | 2.54 |
| CN 15 C 150 J | K 150 J 15 C0G F VB | 2222 730 05159 | 2.54 |
| CN 15 C 150 K | K 150 K 15 C0G F VB | 2222 730 06159 | 2.54 |
| CN 15 C 180 J | K 180 J 15 C0G F VB | 2222 730 05189 | 2.54 |
| CN 15 C 180 K | K 180 K 15 C0G F VB | 2222 730 06189 | 2.54 |
| CN 15 C 220 J | K 220 J 15 C0G F VB | 2222 730 05229 | 2.54 |
| CN 15 C 220 K | K 220 K 15 C0G F VB | 2222 730 06229 | 2.54 |
| CN 15 C 270 J | K 270 J 15 C0G F VB | 2222 730 05279 | 2.54 |
| CN 15 C 270 K | K 270 K 15 C0G F VB | 2222 730 06279 | 2.54 |
| CN 15 C 330 J | K 330 J 15 C0G F VB | 2222 730 05339 | 2.54 |
| CN 15 C 330 K | K 330 K 15 C0G F VB | 2222 730 06339 | 2.54 |
| CN 15 C 390 J | K 390 J 15 C0G F VB | 2222 730 05399 | 2.54 |
| CN 15 C 390 K | K 390 K 15 C0G F VB | 2222 730 06399 | 2.54 |
| CN 15 C 470 J | K 470 J 15 C0G F VB | 2222 730 05479 | 2.54 |
| CN 15 C 470 K | K 470 K 15 C0G F VB | 2222 730 06479 | 2.54 |
| CN 15 C 560 J | K 560 J 15 C0G F VB | 2222 730 05569 | 2.54 |
| CN 15 C 560 K | K 560 K 15 C0G F VB | 2222 730 06569 | 2.54 |
| CN 15 C 680 J | K 680 J 15 C0G F VB | 2222 730 05689 | 2.54 |
| CN 15 C 680 K | K 680 K 15 C0G F VB | 2222 730 06689 | 2.54 |
| CN 15 C 820 J | K 820 J 15 C0G F VB | 2222 730 05829 | 2.54 |
| CN 15 C 820 K | K 820 K 15 C0G F VB | 2222 730 06829 | 2.54 |
| CN 15 C 101 J | K 101 J 15 C0G F VB | 2222 730 05101 | 2.54 |
| CN 15 C 101 K | K 101 K 15 C0G F VB | 2222 730 06101 | 2.54 |
| CN 15 C 121 J | K 121 J 15 C0G F VB | 2222 730 05121 | 2.54 |
| CN 15 C 121 K | K 121 K 15 C0G F VB | 2222 730 06121 | 2.54 |
| CN 15 C 151 J | K 151 J 15 C0G F VB | 2222 730 05151 | 2.54 |
| CN 15 C 151 K | K 151 K 15 C0G F VB | 2222 730 06151 | 2.54 |
| CN 15 C 181 J | K 181 J 15 C0G F VB | 2222 730 05181 | 2.54 |
| CN 15 C 181 K | K 181 K 15 C0G F VB | 2222 730 06181 | 2.54 |
| CN 15 C 221 J | K 221 J 15 C0G F VB | 2222 730 05221 | 2.54 |
| CN 15 C 221 K | K 221 K 15 C0G F VB | 2222 730 06221 | 2.54 |
| CN 15 C 271 J | K 271 J 15 C0G F VB | 2222 730 05271 | 2.54 |
| CN 15 C 271 K | K 271 K 15 C0G F VB | 2222 730 06271 | 2.54 |
| CN 15 C 331 J | K 331 J 15 C0G F VB | 2222 730 05331 | 2.54 |

# Leaded ceramic multilayer capacitors

## Cross reference selection guide

| DISTRIBUTION PART NUMBER | 15-DIGIT CODE[1] | 12NC CODE | PITCH |
|---|---|---|---|
| CN 15 C 331 K | K 331 K 15 C0G F VB | 2222 730 06331 | 2.54 |
| CN 15 C 391 J | K 391 J 15 C0G F VB | 2222 730 05391 | 2.54 |
| CN 15 C 391 K | K 391 K 15 C0G F VB | 2222 730 06391 | 2.54 |
| CN 15 C 471 J | K 471 J 15 C0G F VB | 2222 730 05471 | 2.54 |
| CN 15 C 471 K | K 471 K 15 C0G F VB | 2222 730 06471 | 2.54 |
| CN 15 C 561 J | K 561 J 15 C0G F VB | 2222 730 05561 | 2.54 |
| CN 15 C 561 K | K 561 K 15 C0G F VB | 2222 730 06561 | 2.54 |
| CN 20 C 681 J | K 681 J 15 C0G F VB | 2222 730 05681 | 2.54 |
| CN 20 C 681 K | K 681 K 15 C0G F VB | 2222 730 06681 | 2.54 |
| CN 20 C 821 J | K 821 J 15 C0G F VB | 2222 730 05821 | 2.54 |
| CN 20 C 821 K | K 821 K 15 C0G F VB | 2222 730 06821 | 2.54 |
| CN 20 C 102 J | K 102 J 15 C0G F VB | 2222 730 05102 | 2.54 |
| CN 20 C 102 K | K 102 K 15 C0G F VB | 2222 730 06102 | 2.54 |
| CN 20 C 122 J | K 122 J 20 C0G F VB | 2222 730 05122 | 2.54 |
| CN 20 C 122 K | K 122 K 20 C0G F VB | 2222 730 06122 | 2.54 |
| CN 20 C 152 J | K 152 J 20 C0G F VB | 2222 730 05152 | 2.54 |
| CN 20 C 152 K | K 152 K 20 C0G F VB | 2222 730 06152 | 2.54 |
| CN 20 C 182 J | K 182 J 20 C0G F VB | 2222 730 05182 | 2.54 |
| CN 20 C 182 K | K 182 K 20 C0G F VB | 2222 730 06182 | 2.54 |
| CN 20 C 222 J | K 222 J 20 C0G F VB | 2222 730 05222 | 2.54 |
| CN 20 C 222 K | K 222 K 20 C0G F VB | 2222 730 06222 | 2.54 |
| CN 20 C 272 J | K 272 J 20 C0G F VB | 2222 730 05272 | 2.54 |
| CN 20 C 272 K | K 272 K 20 C0G F VB | 2222 730 06272 | 2.54 |
| CN 20 C 332 J | K 332 J 20 C0G F VB | 2222 730 05332 | 2.54 |
| CN 20 C 332 K | K 332 K 20 C0G F VB | 2222 730 06332 | 2.54 |
| CN 30 C 392 J | K 392 J 20 C0G F VC | 2222 730 17392 | 5.08 |
| CN 30 C 392 K | K 392 K 20 C0G F VC | 2222 730 18392 | 5.08 |
| CN 30 C 472 J | K 472 J 20 C0G F VC | 2222 730 17472 | 5.08 |
| CN 30 C 472 K | K 472 K 20 C0G F VC | 2222 730 18472 | 5.08 |
| CN 30 C 562 J | K 562 J 30 C0G F VC | 2222 730 17562 | 5.08 |
| CN 30 C 562 K | K 562 K 30 C0G F VC | 2222 730 18562 | 5.08 |
| CN 30 C 682 J | K 682 J 30 C0G F VC | 2222 730 17682 | 5.08 |
| CN 30 C 682 K | K 682 K 30 C0G F VC | 2222 730 18682 | 5.08 |
| CN 30 C 822 K | K 822 K 30 C0G F VC | 2222 730 18822 | 5.08 |
| CN 30 C 103 J | K 103 J 30 C0G F VC | 2222 730 17103 | 5.08 |
| CN 30 C 103 K | K 103 K 30 C0G F VC | 2222 730 18103 | 5.08 |
| CN 40 C 153 J | K 153 J 30 C0G F VC | 2222 730 17153 | 5.08 |
| CN 40 C 153 K | K 153 K 30 C0G F VC | 2222 730 18153 | 5.08 |
| CN 40 C 223 J | K 223 J 30 C0G F VC | 2222 730 17223 | 5.08 |
| CN 40 C 223 K | K 223 K 30 C0G F VC | 2222 730 18223 | 5.08 |

# Leaded ceramic multilayer capacitors

## Cross reference selection guide

| DISTRIBUTION PART NUMBER | 15-DIGIT CODE(1) | 12NC CODE | PITCH |
|---|---|---|---|
| CN 15 C 100 J DRM | K 100 J 15 C0G F TT | 2222 730 21109 | 5.08 |
| CN 15 C 100 K DRM | K 100 K 15 C0G F TT | 2222 730 22109 | 5.08 |
| CN 15 C 120 J DRM | K 120 J 15 C0G F TT | 2222 730 21129 | 5.08 |
| CN 15 C 120 K DRM | K 120 K 15 C0G F TT | 2222 730 22129 | 5.08 |
| CN 15 C 150 J DRM | K 150 J 15 C0G F TT | 2222 730 21159 | 5.08 |
| CN 15 C 150 K DRM | K 150 K 15 C0G F TT | 2222 730 22159 | 5.08 |
| CN 15 C 180 J DRM | K 180 J 15 C0G F TT | 2222 730 21189 | 5.08 |
| CN 15 C 180 K DRM | K 180 K 15 C0G F TT | 2222 730 22189 | 5.08 |
| CN 15 C 220 J DRM | K 220 J 15 C0G F TT | 2222 730 21229 | 5.08 |
| CN 15 C 220 K DRM | K 220 K 15 C0G F TT | 2222 730 22229 | 5.08 |
| CN 15 C 270 J DRM | K 270 J 15 C0G F TT | 2222 730 21279 | 5.08 |
| CN 15 C 270 K DRM | K 270 K 15 C0G F TT | 2222 730 22279 | 5.08 |
| CN 15 C 330 J DRM | K 330 J 15 C0G F TT | 2222 730 21339 | 5.08 |
| CN 15 C 330 K DRM | K 330 K 15 C0G F TT | 2222 730 22339 | 5.08 |
| CN 15 C 390 J DRM | K 390 J 15 C0G F TT | 2222 730 21399 | 5.08 |
| CN 15 C 390 K DRM | K 390 K 15 C0G F TT | 2222 730 22399 | 5.08 |
| CN 15 C 470 J DRM | K 470 J 15 C0G F TT | 2222 730 21479 | 5.08 |
| CN 15 C 470 K DRM | K 470 K 15 C0G F TT | 2222 730 22479 | 5.08 |
| CN 15 C 560 J DRM | K 560 J 15 C0G F TT | 2222 730 21569 | 5.08 |
| CN 15 C 560 K DRM | K 560 K 15 C0G F TT | 2222 730 22569 | 5.08 |
| CN 15 C 680 J DRM | K 680 J 15 C0G F TT | 2222 730 21689 | 5.08 |
| CN 15 C 680 K DRM | K 680 K 15 C0G F TT | 2222 730 22689 | 5.08 |
| CN 15 C 820 J DRM | K 820 J 15 C0G F TT | 2222 730 21829 | 5.08 |
| CN 15 C 820 K DRM | K 820 K 15 C0G F TT | 2222 730 22829 | 5.08 |
| CN 15 C 101 J DRM | K 101 J 15 C0G F TT | 2222 730 21101 | 5.08 |
| CN 15 C 101 K DRM | K 101 K 15 C0G F TT | 2222 730 22101 | 5.08 |
| CN 15 C 121 J DRM | K 121 J 15 C0G F TT | 2222 730 21121 | 5.08 |
| CN 15 C 121 K DRM | K 121 K 15 C0G F TT | 2222 730 22121 | 5.08 |
| CN 15 C 151 J DRM | K 151 J 15 C0G F TT | 2222 730 21151 | 5.08 |
| CN 15 C 151 K DRM | K 151 K 15 C0G F TT | 2222 730 22151 | 5.08 |
| CN 15 C 181 J DRM | K 181 J 15 C0G F TT | 2222 730 21181 | 5.08 |
| CN 15 C 181 K DRM | K 181 K 15 C0G F TT | 2222 730 22181 | 5.08 |
| CN 15 C 221 J DRM | K 221 J 15 C0G F TT | 2222 730 21221 | 5.08 |
| CN 15 C 221 K DRM | K 221 K 15 C0G F TT | 2222 730 22221 | 5.08 |
| CN 15 C 271 J DRM | K 271 J 15 C0G F TT | 2222 730 21271 | 5.08 |
| CN 15 C 271 K DRM | K 271 K 15 C0G F TT | 2222 730 22271 | 5.08 |
| CN 15 C 331 J DRM | K 331 J 15 C0G F TT | 2222 730 21331 | 5.08 |
| CN 15 C 331 K DRM | K 331 K 15 C0G F TT | 2222 730 22331 | 5.08 |
| CN 15 C 391 J DRM | K 391 J 15 C0G F TT | 2222 730 21391 | 5.08 |
| CN 15 C 391 K DRM | K 391 K 15 C0G F TT | 2222 730 22391 | 5.08 |

# Leaded ceramic multilayer capacitors

## Cross reference selection guide

| DISTRIBUTION PART NUMBER | 15-DIGIT CODE[1] | 12NC CODE | PITCH |
|---|---|---|---|
| CN 15 C 471 J DRM | K 471 J 15 C0G F TT | 2222 730 21471 | 5.08 |
| CN 15 C 471 K DRM | K 471 K 15 C0G F TT | 2222 730 22471 | 5.08 |
| CN 15 C 561 J DRM | K 561 J 15 C0G F TT | 2222 730 21561 | 5.08 |
| CN 15 C 561 K DRM | K 561 K 15 C0G F TT | 2222 730 22561 | 5.08 |
| CN 20 C 681 J DRM | K 681 J 15 C0G F TT | 2222 730 21681 | 5.08 |
| CN 20 C 681 K DRM | K 681 K 15 C0G F TT | 2222 730 22681 | 5.08 |
| CN 20 C 821 J DRM | K 821 J 15 C0G F TT | 2222 730 21821 | 5.08 |
| CN 20 C 821 K DRM | K 821 K 15 C0G F TT | 2222 730 22821 | 5.08 |
| CN 20 C 102 J DRM | K 102 J 15 C0G F TT | 2222 730 21102 | 5.08 |
| CN 20 C 102 K DRM | K 102 K 15 C0G F TT | 2222 730 22102 | 5.08 |
| CN 20 C 122 J DRM | K 122 J 20 C0G F TT | 2222 730 21122 | 5.08 |
| CN 20 C 122 K DRM | K 122 K 20 C0G F TT | 2222 730 22122 | 5.08 |
| CN 20 C 152 J DRM | K 152 J 20 C0G F TT | 2222 730 21152 | 5.08 |
| CN 20 C 152 K DRM | K 152 K 20 C0G F TT | 2222 730 22152 | 5.08 |
| CN 20 C 182 J DRM | K 182 J 20 C0G F TT | 2222 730 21182 | 5.08 |
| CN 20 C 182 K DRM | K 182 K 20 C0G F TT | 2222 730 22182 | 5.08 |
| CN 20 C 222 J DRM | K 222 J 20 C0G F TT | 2222 730 21222 | 5.08 |
| CN 20 C 222 K DRM | K 222 K 20 C0G F TT | 2222 730 22222 | 5.08 |
| CN 20 C 272 J DRM | K 272 J 20 C0G F TT | 2222 730 21272 | 5.08 |
| CN 20 C 272 K DRM | K 272 K 20 C0G F TT | 2222 730 22272 | 5.08 |
| CN 20 C 332 J DRM | K 332 J 20 C0G F TT | 2222 730 21332 | 5.08 |
| CN 20 C 332 K DRM | K 332 K 20 C0G F TT | 2222 730 22332 | 5.08 |
| CN 30 C 392 J DRM | K 392 J 20 C0G F TT | 2222 730 21392 | 5.08 |
| CN 30 C 392 K DRM | K 392 K 20 C0G F TT | 2222 730 22392 | 5.08 |
| CN 30 C 472 J DRM | K 472 J 20 C0G F TT | 2222 730 21472 | 5.08 |
| CN 30 C 472 K DRM | K 472 K 20 C0G F TT | 2222 730 22472 | 5.08 |
| CN 30 C 562 J DRM | K 562 J 30 C0G F TT | 2222 730 21562 | 5.08 |
| CN 30 C 562 K DRM | K 562 K 30 C0G F TT | 2222 730 22562 | 5.08 |
| CN 30 C 682 J DRM | K 682 J 30 C0G F TT | 2222 730 21682 | 5.08 |
| CN 30 C 682 K DRM | K 682 K 30 C0G F TT | 2222 730 22682 | 5.08 |
| CN 30 C 822 K DRM | K 822 K 30 C0G F TT | 2222 730 22822 | 5.08 |
| CN 30 C 103 J DRM | K 103 J 30 C0G F TT | 2222 730 21103 | 5.08 |
| CN 30 C 103 K DRM | K 103 K 30 C0G F TT | 2222 730 22103 | 5.08 |
| CN 40 C 153 J DRM | K 153 J 30 C0G F TT | 2222 730 21153 | 5.08 |
| CN 40 C 153 K DRM | K 153 K 30 C0G F TT | 2222 730 22153 | 5.08 |
| CN 40 C 223 J DRM | K 223 J 30 C0G F TT | 2222 730 21223 | 5.08 |
| CN 40 C 223 K DRM | K 223 K 30 C0G F TT | 2222 730 22223 | 5.08 |

**Note to Table 1**

1. Only the first 13 digits of the 15-digit code are significant for cross reference purposes.

**Table 2** Mono-kap™ conformal radials **NP0 (C0G)**, 5% and 10% tolerance, **100 V**

| DISTRIBUTION PART NUMBER | 15-DIGIT CODE(1) | 12NC CODE | PITCH |
|---|---|---|---|
| CN 15 A 100 J | K 100 J 15 C0G H VB | 2222 730 37109 | 2.54 |
| CN 15 A 100 K | K 100 K 15 C0G H VB | 2222 730 38109 | 2.54 |
| CN 15 A 120 J | K 120 J 15 C0G H VB | 2222 730 37129 | 2.54 |
| CN 15 A 120 K | K 120 K 15 C0G H VB | 2222 730 38129 | 2.54 |
| CN 15 A 150 J | K 150 J 15 C0G H VB | 2222 730 37159 | 2.54 |
| CN 15 A 150 K | K 150 K 15 C0G H VB | 2222 730 38159 | 2.54 |
| CN 15 A 180 J | K 180 J 15 C0G H VB | 2222 730 37189 | 2.54 |
| CN 15 A 180 K | K 180 K 15 C0G H VB | 2222 730 38189 | 2.54 |
| CN 15 A 220 J | K 220 J 15 C0G H VB | 2222 730 37229 | 2.54 |
| CN 15 A 220 K | K 220 K 15 C0G H VB | 2222 730 38229 | 2.54 |
| CN 15 A 270 J | K 270 J 15 C0G H VB | 2222 730 37279 | 2.54 |
| CN 15 A 270 K | K 270 K 15 C0G H VB | 2222 730 38279 | 2.54 |
| CN 15 A 330 J | K 330 J 15 C0G H VB | 2222 730 37339 | 2.54 |
| CN 15 A 330 K | K 330 K 15 C0G H VB | 2222 730 38339 | 2.54 |
| CN 15 A 390 J | K 390 J 15 C0G H VB | 2222 730 37399 | 2.54 |
| CN 15 A 390 K | K 390 K 15 C0G H VB | 2222 730 38399 | 2.54 |
| CN 15 A 470 J | K 470 J 15 C0G H VB | 2222 730 37479 | 2.54 |
| CN 15 A 470 K | K 470 K 15 C0G H VB | 2222 730 38479 | 2.54 |
| CN 15 A 560 J | K 560 J 15 C0G H VB | 2222 730 37569 | 2.54 |
| CN 15 A 560 K | K 560 K 15 C0G H VB | 2222 730 38569 | 2.54 |
| CN 15 A 680 J | K 680 J 15 C0G H VB | 2222 730 37689 | 2.54 |
| CN 15 A 680 K | K 680 K 15 C0G H VB | 2222 730 38689 | 2.54 |
| CN 15 A 820 J | K 820 J 15 C0G H VB | 2222 730 37829 | 2.54 |
| CN 15 A 820 K | K 820 K 15 C0G H VB | 2222 730 38829 | 2.54 |
| CN 15 A 101 J | K 101 J 15 C0G H VB | 2222 730 37101 | 2.54 |
| CN 15 A 101 K | K 101 K 15 C0G H VB | 2222 730 38101 | 2.54 |
| CN 15 A 121 J | K 121 J 15 C0G H VB | 2222 730 37121 | 2.54 |
| CN 15 A 121 K | K 121 K 15 C0G H VB | 2222 730 38121 | 2.54 |
| CN 15 A 151 J | K 151 J 15 C0G H VB | 2222 730 37151 | 2.54 |
| CN 15 A 151 K | K 151 K 15 C0G H VB | 2222 730 38151 | 2.54 |
| CN 15 A 181 J | K 181 J 15 C0G H VB | 2222 730 37181 | 2.54 |
| CN 15 A 181 K | K 181 K 15 C0G H VB | 2222 730 38181 | 2.54 |
| CN 15 A 221 J | K 221 J 15 C0G H VB | 2222 730 37221 | 2.54 |
| CN 15 A 221 K | K 221 K 15 C0G H VB | 2222 730 38221 | 2.54 |
| CN 15 A 271 J | K 271 J 15 C0G H VB | 2222 730 37271 | 2.54 |
| CN 15 A 271 K | K 271 K 15 C0G H VB | 2222 730 38271 | 2.54 |
| CN 15 A 331 J | K 331 J 15 C0G H VB | 2222 730 37331 | 2.54 |
| CN 15 A 331 K | K 331 K 15 C0G H VB | 2222 730 38331 | 2.54 |
| CN 15 A 391 J | K 391 J 15 C0G H VB | 2222 730 37391 | 2.54 |

# Leaded ceramic multilayer capacitors

## Cross reference selection guide

| DISTRIBUTION PART NUMBER | 15-DIGIT CODE(1) | 12NC CODE | PITCH |
|---|---|---|---|
| CN 15 A 391 K | K 391 K 15 C0G H VB | 2222 730 38391 | 2.54 |
| CN 20 A 471 J | K 471 J 15 C0G H VB | 2222 730 37471 | 2.54 |
| CN 20 A 471 K | K 471 K 15 C0G H VB | 2222 730 38471 | 2.54 |
| CN 20 A 561 J | K 561 J 15 C0G H VB | 2222 730 37561 | 2.54 |
| CN 20 A 561 K | K 561 K 15 C0G H VB | 2222 730 38561 | 2.54 |
| CN 20 A 681 J | K 681 J 15 C0G H VB | 2222 730 37681 | 2.54 |
| CN 20 A 681 K | K 681 K 15 C0G H VB | 2222 730 38681 | 2.54 |
| CN 20 A 821 J | K 821 J 15 C0G H VB | 2222 730 37821 | 2.54 |
| CN 20 A 821 K | K 821 K 15 C0G H VB | 2222 730 38821 | 2.54 |
| CN 20 A 102 J | K 102 J 20 C0G H VB | 2222 730 37102 | 2.54 |
| CN 20 A 102 K | K 102 K 20 C0G H VB | 2222 730 38102 | 2.54 |
| CN 20 A 122 J | K 122 J 20 C0G H VB | 2222 730 37122 | 2.54 |
| CN 20 A 152 J | K 152 J 20 C0G H VB | 2222 730 37152 | 2.54 |
| CN 20 A 152 K | K 152 K 20 C0G H VB | 2222 730 38152 | 2.54 |
| CN 30 A 182 J | K 182 J 20 C0G H VC | 2222 730 49182 | 5.08 |
| CN 30 A 182 K | K 182 K 20 C0G H VC | 2222 730 50182 | 5.08 |
| CN 30 A 222 J | K 222 J 20 C0G H VC | 2222 730 49222 | 5.08 |
| CN 30 A 222 K | K 222 K 20 C0G H VC | 2222 730 50222 | 5.08 |
| CN 30 A 272 J | K 272 J 20 C0G H VC | 2222 730 49272 | 5.08 |
| CN 30 A 272 K | K 272 K 20 C0G H VC | 2222 730 50272 | 5.08 |
| CN 30 A 332 J | K 332 J 20 C0G H VC | 2222 730 49332 | 5.08 |
| CN 30 A 332 K | K 332 K 20 C0G H VC | 2222 730 50332 | 5.08 |
| CN 30 A 392 J | K 392 J 20 C0G H VC | 2222 730 49392 | 5.08 |
| CN 30 A 472 J | K 472 J 20 C0G H VC | 2222 730 49472 | 5.08 |
| CN 30 A 472 K | K 472 K 20 C0G H VC | 2222 730 50472 | 5.08 |
| CN 30 A 682 J | K 682 J 30 C0G H VC | 2222 730 49682 | 5.08 |
| CN 30 A 103 J | K 103 J 30 C0G H VC | 2222 730 49103 | 5.08 |
| CN 30 A 103 K | K 103 K 30 C0G H VC | 2222 730 50103 | 5.08 |
| CN 15 A 100 J DRM | K 100 J 15 C0G H TT | 2222 730 53109 | 5.08 |
| CN 15 A 100 K DRM | K 100 K 15 C0G H TT | 2222 730 54109 | 5.08 |
| CN 15 A 120 J DRM | K 120 J 15 C0G H TT | 2222 730 53129 | 5.08 |
| CN 15 A 120 K DRM | K 120 K 15 C0G H TT | 2222 730 54129 | 5.08 |
| CN 15 A 150 J DRM | K 150 J 15 C0G H TT | 2222 730 53159 | 5.08 |
| CN 15 A 150 K DRM | K 150 K 15 C0G H TT | 2222 730 54159 | 5.08 |
| CN 15 A 180 J DRM | K 180 J 15 C0G H TT | 2222 730 53189 | 5.08 |
| CN 15 A 180 K DRM | K 180 K 15 C0G H TT | 2222 730 54189 | 5.08 |
| CN 15 A 220 J DRM | K 220 J 15 C0G H TT | 2222 730 53229 | 5.08 |
| CN 15 A 220 K DRM | K 220 K 15 C0G H TT | 2222 730 54229 | 5.08 |
| CN 15 A 270 J DRM | K 270 J 15 C0G H TT | 2222 730 53279 | 5.08 |
| CN 15 A 270 K DRM | K 270 K 15 C0G H TT | 2222 730 54279 | 5.08 |

# Leaded ceramic multilayer capacitors

## Cross reference selection guide

| DISTRIBUTION PART NUMBER | 15-DIGIT CODE[1] | 12NC CODE | PITCH |
|---|---|---|---|
| CN 15 A 330 J DRM | K 330 J 15 C0G H TT | 2222 730 53339 | 5.08 |
| CN 15 A 330 K DRM | K 330 K 15 C0G H TT | 2222 730 54339 | 5.08 |
| CN 15 A 390 J DRM | K 390 J 15 C0G H TT | 2222 730 53399 | 5.08 |
| CN 15 A 390 K DRM | K 390 K 15 C0G H TT | 2222 730 54399 | 5.08 |
| CN 15 A 470 J DRM | K 470 J 15 C0G H TT | 2222 730 53479 | 5.08 |
| CN 15 A 470 K DRM | K 470 K 15 C0G H TT | 2222 730 54479 | 5.08 |
| CN 15 A 560 J DRM | K 560 J 15 C0G H TT | 2222 730 53569 | 5.08 |
| CN 15 A 560 K DRM | K 560 K 15 C0G H TT | 2222 730 54569 | 5.08 |
| CN 15 A 680 J DRM | K 680 J 15 C0G H TT | 2222 730 53689 | 5.08 |
| CN 15 A 680 K DRM | K 680 K 15 C0G H TT | 2222 730 54689 | 5.08 |
| CN 15 A 820 J DRM | K 820 J 15 C0G H TT | 2222 730 53829 | 5.08 |
| CN 15 A 820 K DRM | K 820 K 15 C0G H TT | 2222 730 54829 | 5.08 |
| CN 15 A 101 J DRM | K 101 J 15 C0G H TT | 2222 730 53101 | 5.08 |
| CN 15 A 101 K DRM | K 101 K 15 C0G H TT | 2222 730 54101 | 5.08 |
| CN 15 A 121 J DRM | K 121 J 15 C0G H TT | 2222 730 53121 | 5.08 |
| CN 15 A 121 K DRM | K 121 K 15 C0G H TT | 2222 730 54121 | 5.08 |
| CN 15 A 151 J DRM | K 151 J 15 C0G H TT | 2222 730 53151 | 5.08 |
| CN 15 A 151 K DRM | K 151 K 15 C0G H TT | 2222 730 54151 | 5.08 |
| CN 15 A 181 J DRM | K 181 J 15 C0G H TT | 2222 730 53181 | 5.08 |
| CN 15 A 181 K DRM | K 181 K 15 C0G H TT | 2222 730 54181 | 5.08 |
| CN 15 A 221 J DRM | K 221 J 15 C0G H TT | 2222 730 53221 | 5.08 |
| CN 15 A 221 K DRM | K 221 K 15 C0G H TT | 2222 730 54221 | 5.08 |
| CN 15 A 271 J DRM | K 271 J 15 C0G H TT | 2222 730 53271 | 5.08 |
| CN 15 A 271 K DRM | K 271 K 15 C0G H TT | 2222 730 54271 | 5.08 |
| CN 15 A 331 J DRM | K 331 J 15 C0G H TT | 2222 730 53331 | 5.08 |
| CN 15 A 331 K DRM | K 331 K 15 C0G H TT | 2222 730 54331 | 5.08 |
| CN 15 A 391 J DRM | K 391 J 15 C0G H TT | 2222 730 53391 | 5.08 |
| CN 15 A 391 K DRM | K 391 K 15 C0G H TT | 2222 730 54391 | 5.08 |
| CN 20 A 471 J DRM | K 471 J 15 C0G H TT | 2222 730 53471 | 5.08 |
| CN 20 A 471 K DRM | K 471 K 15 C0G H TT | 2222 730 54471 | 5.08 |
| CN 20 A 561 J DRM | K 561 J 15 C0G H TT | 2222 730 53561 | 5.08 |
| CN 20 A 561 K DRM | K 561 K 15 C0G H TT | 2222 730 54561 | 5.08 |
| CN 20 A 681 J DRM | K 681 J 15 C0G H TT | 2222 730 53681 | 5.08 |
| CN 20 A 681 K DRM | K 681 K 15 C0G H TT | 2222 730 54681 | 5.08 |
| CN 20 A 821 J DRM | K 821 J 15 C0G H TT | 2222 730 53821 | 5.08 |
| CN 20 A 821 K DRM | K 821 K 15 C0G H TT | 2222 730 54821 | 5.08 |
| CN 20 A 102 J DRM | K 102 J 20 C0G H TT | 2222 730 53102 | 5.08 |
| CN 20 A 102 K DRM | K 102 K 20 C0G H TT | 2222 730 54102 | 5.08 |
| CN 20 A 122 J DRM | K 122 J 20 C0G H TT | 2222 730 53122 | 5.08 |
| CN 20 A 152 J DRM | K 152 J 20 C0G H TT | 2222 730 53152 | 5.08 |

| DISTRIBUTION PART NUMBER | 15-DIGIT CODE(1) | 12NC CODE | PITCH |
|---|---|---|---|
| CN 20 A 152 K DRM | K 152 K 20 C0G H TT | 2222 730 54152 | 5.08 |
| CN 30 A 182 J DRM | K 182 J 20 C0G H TT | 2222 730 53182 | 5.08 |
| CN 30 A 182 K DRM | K 182 K 20 C0G H TT | 2222 730 54182 | 5.08 |
| CN 30 A 222 J DRM | K 222 J 20 C0G H TT | 2222 730 53222 | 5.08 |
| CN 30 A 222 K DRM | K 222 K 20 C0G H TT | 2222 730 54222 | 5.08 |
| CN 30 A 272 J DRM | K 272 J 20 C0G H TT | 2222 730 53272 | 5.08 |
| CN 30 A 272 K DRM | K 272 K 20 C0G H TT | 2222 730 54272 | 5.08 |
| CN 30 A 332 J DRM | K 332 J 20 C0G H TT | 2222 730 53332 | 5.08 |
| CN 30 A 332 K DRM | K 332 K 20 C0G H TT | 2222 730 54332 | 5.08 |
| CN 30 A 392 J DRM | K 392 J 30 C0G H TT | 2222 730 53392 | 5.08 |
| CN 30 A 472 J DRM | K 472 J 30 C0G H TT | 2222 730 53472 | 5.08 |
| CN 30 A 472 K DRM | K 472 K 30 C0G H TT | 2222 730 54472 | 5.08 |
| CN 30 A 682 J DRM | K 682 J 30 C0G H TT | 2222 730 53682 | 5.08 |
| CN 30 A 103 J DRM | K 103 J 30 C0G H TT | 2222 730 53103 | 5.08 |
| CN 30 A 103 K DRM | K 103 K 30 C0G H TT | 2222 730 54103 | 5.08 |

**Note to Table 2**

1. Only the first 13 digits of the 15-digit code are significant for cross reference purposes.

**Table 3** Mono-kap™ conformal radials **X7R**, 10% and 20% tolerance, **50 V**

| DISTRIBUTION PART NUMBER | 15-DIGIT CODE(1) | 12NC CODE | PITCH |
|---|---|---|---|
| CW 15 C 151 K | K 151 K 15 X7R F VB | 2222 731 06151 | 2.54 |
| CW 15 C 181 K | K 181 K 15 X7R F VB | 2222 731 06181 | 2.54 |
| CW 15 C 181 M | K 181 M 15 X7R F VB | 2222 731 07181 | 2.54 |
| CW 15 C 221 K | K 221 K 15 X7R F VB | 2222 731 06221 | 2.54 |
| CW 15 C 271 K | K 271 K 15 X7R F VB | 2222 731 06271 | 2.54 |
| CW 15 C 271 M | K 271 M 15 X7R F VB | 2222 731 07271 | 2.54 |
| CW 15 C 331 K | K 331 K 15 X7R F VB | 2222 731 06331 | 2.54 |
| CW 15 C 331 M | K 331 M 15 X7R F VB | 2222 731 07331 | 2.54 |
| CW 15 C 391 K | K 391 K 15 X7R F VB | 2222 731 06391 | 2.54 |
| CW 15 C 391 M | K 391 M 15 X7R F VB | 2222 731 07391 | 2.54 |
| CW 15 C 471 K | K 471 K 15 X7R F VB | 2222 731 06471 | 2.54 |
| CW 15 C 471 M | K 471 M 15 X7R F VB | 2222 731 07471 | 2.54 |
| CW 15 C 561 K | K 561 K 15 X7R F VB | 2222 731 06561 | 2.54 |
| CW 15 C 681 K | K 681 K 15 X7R F VB | 2222 731 06681 | 2.54 |
| CW 15 C 681 M | K 681 M 15 X7R F VB | 2222 731 07681 | 2.54 |
| CW 15 C 821 K | K 821 K 15 X7R F VB | 2222 731 06821 | 2.54 |
| CW 15 C 821 M | K 821 M 15 X7R F VB | 2222 731 07821 | 2.54 |
| CW 15 C 102 K | K 102 K 15 X7R F VB | 2222 731 06102 | 2.54 |
| CW 15 C 102 M | K 102 M 15 X7R F VB | 2222 731 07102 | 2.54 |

# Leaded ceramic multilayer capacitors

## Cross reference selection guide

| DISTRIBUTION PART NUMBER | 15-DIGIT CODE(1) | 12NC CODE | PITCH |
|---|---|---|---|
| CW 15 C 122 K | K 122 K 15 X7R F VB | 2222 731 06122 | 2.54 |
| CW 15 C 152 K | K 152 K 15 X7R F VB | 2222 731 06152 | 2.54 |
| CW 15 C 182 K | K 182 K 15 X7R F VB | 2222 731 06182 | 2.54 |
| CW 15 C 222 K | K 222 K 15 X7R F VB | 2222 731 06222 | 2.54 |
| CW 15 C 222 M | K 222 M 15 X7R F VB | 2222 731 07222 | 2.54 |
| CW 15 C 272 K | K 272 K 15 X7R F VB | 2222 731 06272 | 2.54 |
| CW 15 C 272 M | K 272 M 15 X7R F VB | 2222 731 07272 | 2.54 |
| CW 15 C 332 K | K 332 K 15 X7R F VB | 2222 731 06332 | 2.54 |
| CW 15 C 332 M | K 332 M 15 X7R F VB | 2222 731 07332 | 2.54 |
| CW 15 C 392 K | K 392 K 15 X7R F VB | 2222 731 06392 | 2.54 |
| CW 15 C 472 K | K 472 K 15 X7R F VB | 2222 731 06472 | 2.54 |
| CW 15 C 472 M | K 472 M 15 X7R F VB | 2222 731 07472 | 2.54 |
| CW 15 C 562 K | K 562 K 15 X7R F VB | 2222 731 06562 | 2.54 |
| CW 15 C 562 M | K 562 M 15 X7R F VB | 2222 731 07562 | 2.54 |
| CW 15 C 682 K | K 682 K 15 X7R F VB | 2222 731 06682 | 2.54 |
| CW 15 C 682 M | K 682 M 15 X7R F VB | 2222 731 07682 | 2.54 |
| CW 15 C 822 K | K 822 K 15 X7R F VB | 2222 731 06822 | 2.54 |
| CW 15 C 822 M | K 822 M 15 X7R F VB | 2222 731 07822 | 2.54 |
| CW 15 C 103 K | K 103 K 15 X7R F VB | 2222 731 06103 | 2.54 |
| CW 15 C 103 M | K 103 M 15 X7R F VB | 2222 731 07103 | 2.54 |
| CW 15 C 153 K | K 153 K 15 X7R F VB | 2222 731 06153 | 2.54 |
| CW 15 C 153 M | K 153 M 15 X7R F VB | 2222 731 07153 | 2.54 |
| CW 20 C 183 K | K 183 K 15 X7R F VB | 2222 731 06183 | 2.54 |
| CW 20 C 183 M | K 183 M 15 X7R F VB | 2222 731 07183 | 2.54 |
| CW 20 C 223 K | K 223 K 15 X7R F VB | 2222 731 06223 | 2.54 |
| CW 20 C 223 M | K 223 M 15 X7R F VB | 2222 731 07223 | 2.54 |
| CW 20 C 273 K | K 273 K 15 X7R F VB | 2222 731 06273 | 2.54 |
| CW 20 C 273 M | K 273 M 15 X7R F VB | 2222 731 07273 | 2.54 |
| CW 20 C 333 K | K 333 K 15 X7R F VB | 2222 731 06333 | 2.54 |
| CW 20 C 333 M | K 333 M 15 X7R F VB | 2222 731 07333 | 2.54 |
| CW 20 C 393 K | K 393 K 20 X7R F VB | 2222 731 06393 | 2.54 |
| CW 20 C 473 K | K 473 K 20 X7R F VB | 2222 731 06473 | 2.54 |
| CW 20 C 473 M | K 473 M 20 X7R F VB | 2222 731 07473 | 2.54 |
| CW 20 C 563 K | K 563 K 20 X7R F VB | 2222 731 06563 | 2.54 |
| CW 20 C 563 M | K 563 M 20 X7R F VB | 2222 731 07563 | 2.54 |
| CW 20 C 683 K | K 683 K 20 X7R F VB | 2222 731 06683 | 2.54 |
| CW 20 C 683 M | K 683 M 20 X7R F VB | 2222 731 07683 | 2.54 |
| CW 20 C 823 K | K 823 K 20 X7R F VB | 2222 731 06823 | 2.54 |
| CW 20 C 104 K | K 104 K 20 X7R F VB | 2222 731 06104 | 2.54 |
| CW 20 C 104 M | K 104 M 20 X7R F VB | 2222 731 07104 | 2.54 |

# Leaded ceramic multilayer capacitors

## Cross reference selection guide

| DISTRIBUTION PART NUMBER | 15-DIGIT CODE(1) | 12NC CODE | PITCH |
|---|---|---|---|
| CW 30 C 124 K | K 124 K 20 X7R F VC | 2222 731 18124 | 5.08 |
| CW 30 C 124 M | K 124 M 20 X7R F VC | 2222 731 19124 | 5.08 |
| CW 30 C 154 K | K 154 K 20 X7R F VC | 2222 731 18154 | 5.08 |
| CW 30 C 154 M | K 154 M 20 X7R F VC | 2222 731 19154 | 5.08 |
| CW 30 C 184 K | K 184 K 20 X7R F VC | 2222 731 18184 | 5.08 |
| CW 30 C 184 M | K 184 M 20 X7R F VC | 2222 731 19184 | 5.08 |
| CW 30 C 224 K | K 224 K 20 X7R F VC | 2222 731 18224 | 5.08 |
| CW 30 C 224 M | K 224 M 20 X7R F VC | 2222 731 19224 | 5.08 |
| CW 30 C 274 K | K 274 K 30 X7R F VC | 2222 731 18274 | 5.08 |
| CW 30 C 274 M | K 274 M 30 X7R F VC | 2222 731 19274 | 5.08 |
| CW 30 C 334 K | K 334 K 30 X7R F VC | 2222 731 18334 | 5.08 |
| CW 30 C 334 M | K 334 M 30 X7R F VC | 2222 731 19334 | 5.08 |
| CW 30 C 394 K | K 394 K 30 X7R F VC | 2222 731 18394 | 5.08 |
| CW 30 C 474 K | K 474 K 30 X7R F VC | 2222 731 18474 | 5.08 |
| CW 30 C 474 M | K 474 M 30 X7R F VC | 2222 731 19474 | 5.08 |
| CW 40 C 564 M | K 564 M 30 X7R F VC | 2222 731 19564 | 5.08 |
| CW 40 C 684 K | K 684 K 30 X7R F VC | 2222 731 18684 | 5.08 |
| CW 40 C 824 M | K 824 M 30 X7R F VC | 2222 731 19824 | 5.08 |
| CW 40 C 105 K | K 105 K 30 X7R F VC | 2222 731 18105 | 5.08 |
| CW 40 C 105 M | K 105 M 30 X7R F VC | 2222 731 19105 | 5.08 |
| CW 15 C 151 K DRM | K 151 K 15 X7R F TT | 2222 731 22151 | 5.08 |
| CW 15 C 181 K DRM | K 181 K 15 X7R F TT | 2222 731 22181 | 5.08 |
| CW 15 C 181 M DRM | K 181 M 15 X7R F TT | 2222 731 23181 | 5.08 |
| CW 15 C 221 K DRM | K 221 K 15 X7R F TT | 2222 731 22221 | 5.08 |
| CW 15 C 271 K DRM | K 271 K 15 X7R F TT | 2222 731 22271 | 5.08 |
| CW 15 C 271 M DRM | K 271 M 15 X7R F TT | 2222 731 23271 | 5.08 |
| CW 15 C 331 K DRM | K 331 K 15 X7R F TT | 2222 731 22331 | 5.08 |
| CW 15 C 331 M DRM | K 331 M 15 X7R F TT | 2222 731 23331 | 5.08 |
| CW 15 C 391 K DRM | K 391 K 15 X7R F TT | 2222 731 22391 | 5.08 |
| CW 15 C 391 M DRM | K 391 M 15 X7R F TT | 2222 731 23391 | 5.08 |
| CW 15 C 471 K DRM | K 471 K 15 X7R F TT | 2222 731 22471 | 5.08 |
| CW 15 C 471 M DRM | K 471 M 15 X7R F TT | 2222 731 23471 | 5.08 |
| CW 15 C 561 K DRM | K 561 K 15 X7R F TT | 2222 731 22561 | 5.08 |
| CW 15 C 681 K DRM | K 681 K 15 X7R F TT | 2222 731 22681 | 5.08 |
| CW 15 C 681 M DRM | K 681 M 15 X7R F TT | 2222 731 23681 | 5.08 |
| CW 15 C 821 K DRM | K 821 K 15 X7R F TT | 2222 731 22821 | 5.08 |
| CW 15 C 821 M DRM | K 821 M 15 X7R F TT | 2222 731 23821 | 5.08 |
| CW 15 C 102 K DRM | K 102 K 15 X7R F TT | 2222 731 22102 | 5.08 |
| CW 15 C 102 M DRM | K 102 M 15 X7R F TT | 2222 731 23102 | 5.08 |
| CW 15 C 122 K DRM | K 122 K 15 X7R F TT | 2222 731 22122 | 5.08 |

# Leaded ceramic multilayer capacitors

## Cross reference selection guide

| DISTRIBUTION PART NUMBER | 15-DIGIT CODE[1] | 12NC CODE | PITCH |
|---|---|---|---|
| CW 15 C 152 K DRM | K 152 K 15 X7R F TT | 2222 731 22152 | 5.08 |
| CW 15 C 182 K DRM | K 182 K 15 X7R F TT | 2222 731 22182 | 5.08 |
| CW 15 C 222 K DRM | K 222 K 15 X7R F TT | 2222 731 22222 | 5.08 |
| CW 15 C 222 M DRM | K 222 M 15 X7R F TT | 2222 731 23222 | 5.08 |
| CW 15 C 272 K DRM | K 272 K 15 X7R F TT | 2222 731 22272 | 5.08 |
| CW 15 C 272 M DRM | K 272 M 15 X7R F TT | 2222 731 23272 | 5.08 |
| CW 15 C 332 K DRM | K 332 K 15 X7R F TT | 2222 731 22332 | 5.08 |
| CW 15 C 332 M DRM | K 332 M 15 X7R F TT | 2222 731 23332 | 5.08 |
| CW 15 C 392 K DRM | K 392 K 15 X7R F TT | 2222 731 22392 | 5.08 |
| CW 15 C 472 K DRM | K 472 K 15 X7R F TT | 2222 731 22472 | 5.08 |
| CW 15 C 472 M DRM | K 472 M 15 X7R F TT | 2222 731 23472 | 5.08 |
| CW 15 C 562 K DRM | K 562 K 15 X7R F TT | 2222 731 22562 | 5.08 |
| CW 15 C 562 M DRM | K 562 M 15 X7R F TT | 2222 731 23562 | 5.08 |
| CW 15 C 682 K DRM | K 682 K 15 X7R F TT | 2222 731 22682 | 5.08 |
| CW 15 C 682 M DRM | K 682 M 15 X7R F TT | 2222 731 23682 | 5.08 |
| CW 15 C 822 K DRM | K 822 K 15 X7R F TT | 2222 731 22822 | 5.08 |
| CW 15 C 822 M DRM | K 822 M 15 X7R F TT | 2222 731 23822 | 5.08 |
| CW 15 C 103 K DRM | K 103 K 15 X7R F TT | 2222 731 22103 | 5.08 |
| CW 15 C 103 M DRM | K 103 M 15 X7R F TT | 2222 731 23103 | 5.08 |
| CW 15 C 153 K DRM | K 153 K 15 X7R F TT | 2222 731 22153 | 5.08 |
| CW 15 C 153 M DRM | K 153 M 15 X7R F TT | 2222 731 23153 | 5.08 |
| CW 20 C 183 K DRM | K 183 K 15 X7R F TT | 2222 731 22183 | 5.08 |
| CW 20 C 183 M DRM | K 183 M 15 X7R F TT | 2222 731 23183 | 5.08 |
| CW 20 C 223 K DRM | K 223 K 15 X7R F TT | 2222 731 22223 | 5.08 |
| CW 20 C 223 M DRM | K 223 M 15 X7R F TT | 2222 731 23223 | 5.08 |
| CW 20 C 273 K DRM | K 273 K 15 X7R F TT | 2222 731 22273 | 5.08 |
| CW 20 C 273 M DRM | K 273 M 15 X7R F TT | 2222 731 23273 | 5.08 |
| CW 20 C 333 K DRM | K 333 K 15 X7R F TT | 2222 731 22333 | 5.08 |
| CW 20 C 333 M DRM | K 333 M 15 X7R F TT | 2222 731 23333 | 5.08 |
| CW 20 C 393 K DRM | K 393 K 20 X7R F TT | 2222 731 22393 | 5.08 |
| CW 20 C 473 K DRM | K 473 K 20 X7R F TT | 2222 731 22473 | 5.08 |
| CW 20 C 473 M DRM | K 473 M 20 X7R F TT | 2222 731 23473 | 5.08 |
| CW 20 C 563 K DRM | K 563 K 20 X7R F TT | 2222 731 22563 | 5.08 |
| CW 20 C 563 M DRM | K 563 M 20 X7R F TT | 2222 731 23563 | 5.08 |
| CW 20 C 683 K DRM | K 683 K 20 X7R F TT | 2222 731 22683 | 5.08 |
| CW 20 C 683 M DRM | K 683 M 20 X7R F TT | 2222 731 23683 | 5.08 |
| CW 20 C 823 K DRM | K 823 K 20 X7R F TT | 2222 731 22823 | 5.08 |
| CW 20 C 104 K DRM | K 104 K 20 X7R F TT | 2222 731 22104 | 5.08 |
| CW 20 C 104 M DRM | K 104 M 20 X7R F TT | 2222 731 23104 | 5.08 |
| CW 30 C 124 K DRM | K 124 K 20 X7R F TT | 2222 731 22124 | 5.08 |

| DISTRIBUTION PART NUMBER | 15-DIGIT CODE(1) | 12NC CODE | PITCH |
|---|---|---|---|
| CW 30 C 124 M DRM | K 124 M 20 X7R F TT | 2222 731 23124 | 5.08 |
| CW 30 C 154 K DRM | K 154 K 20 X7R F TT | 2222 731 22154 | 5.08 |
| CW 30 C 154 M DRM | K 154 M 20 X7R F TT | 2222 731 23154 | 5.08 |
| CW 30 C 184 K DRM | K 184 K 20 X7R F TT | 2222 731 22184 | 5.08 |
| CW 30 C 184 M DRM | K 184 M 20 X7R F TT | 2222 731 23184 | 5.08 |
| CW 30 C 224 K DRM | K 224 K 20 X7R F TT | 2222 731 22224 | 5.08 |
| CW 30 C 224 M DRM | K 224 M 20 X7R F TT | 2222 731 23224 | 5.08 |
| CW 30 C 274 K DRM | K 274 K 30 X7R F TT | 2222 731 22274 | 5.08 |
| CW 30 C 274 M DRM | K 274 M 30 X7R F TT | 2222 731 23274 | 5.08 |
| CW 30 C 334 K DRM | K 334 K 30 X7R F TT | 2222 731 22334 | 5.08 |
| CW 30 C 334 M DRM | K 334 M 30 X7R F TT | 2222 731 23334 | 5.08 |
| CW 30 C 394 K DRM | K 394 K 30 X7R F TT | 2222 731 22394 | 5.08 |
| CW 30 C 474 K DRM | K 474 K 30 X7R F TT | 2222 731 22474 | 5.08 |
| CW 30 C 474 M DRM | K 474 M 30 X7R F TT | 2222 731 23474 | 5.08 |
| CW 40 C 564 M DRM | K 564 M 30 X7R F TT | 2222 731 23564 | 5.08 |
| CW 40 C 684 K DRM | K 684 K 30 X7R F TT | 2222 731 22684 | 5.08 |
| CW 40 C 824 M DRM | K 824 M 30 X7R F TT | 2222 731 23824 | 5.08 |
| CW 40 C 105 K DRM | K 105 K 30 X7R F TT | 2222 731 22105 | 5.08 |
| CW 40 C 105 M DRM | K 105 M 30 X7R F TT | 2222 731 23105 | 5.08 |

**Note to Table 3**

1. Only the first 13 digits of the 15-digit code are significant for cross reference purposes.

**Table 4** Mono-kap™ conformal radials **X7R**, 10% and 20% tolerance, **100 V**

| DISTRIBUTION PART NUMBER | 15-DIGIT CODE(1) | 12NC CODE | PITCH |
|---|---|---|---|
| CW 15 A 151 K | K 151 K 15 X7R H VB | 2222 731 38151 | 2.54 |
| CW 15 A 151 M | K 151 M 15 X7R H VB | 2222 731 39151 | 2.54 |
| CW 15 A 181 K | K 181 K 15 X7R H VB | 2222 731 38181 | 2.54 |
| CW 15 A 221 K | K 221 K 15 X7R H VB | 2222 731 38221 | 2.54 |
| CW 15 A 221 M | K 221 M 15 X7R H VB | 2222 731 39221 | 2.54 |
| CW 15 A 271 K | K 271 K 15 X7R H VB | 2222 731 38271 | 2.54 |
| CW 15 A 331 K | K 331 K 15 X7R H VB | 2222 731 38331 | 2.54 |
| CW 15 A 331 M | K 331 M 15 X7R H VB | 2222 731 39331 | 2.54 |
| CW 15 A 391 K | K 391 K 15 X7R H VB | 2222 731 38391 | 2.54 |
| CW 15 A 391 M | K 391 M 15 X7R H VB | 2222 731 39391 | 2.54 |
| CW 15 A 471 K | K 471 K 15 X7R H VB | 2222 731 38471 | 2.54 |
| CW 15 A 471 M | K 471 M 15 X7R H VB | 2222 731 39471 | 2.54 |
| CW 15 A 561 K | K 561 K 15 X7R H VB | 2222 731 38561 | 2.54 |
| CW 15 A 561 M | K 561 M 15 X7R H VB | 2222 731 39561 | 2.54 |
| CW 15 A 681 K | K 681 K 15 X7R H VB | 2222 731 38681 | 2.54 |

# Leaded ceramic multilayer capacitors

## Cross reference selection guide

| DISTRIBUTION PART NUMBER | 15-DIGIT CODE[1] | 12NC CODE | PITCH |
|---|---|---|---|
| CW 15 A 821 K | K 821 K 15 X7R H VB | 2222 731 38821 | 2.54 |
| CW 15 A 102 K | K 102 K 15 X7R H VB | 2222 731 38102 | 2.54 |
| CW 15 A 102 M | K 102 M 15 X7R H VB | 2222 731 39102 | 2.54 |
| CW 15 A 122 K | K 122 K 15 X7R H VB | 2222 731 38122 | 2.54 |
| CW 15 A 122 M | K 122 M 15 X7R H VB | 2222 731 39122 | 2.54 |
| CW 15 A 152 K | K 152 K 15 X7R H VB | 2222 731 38152 | 2.54 |
| CW 15 A 182 K | K 182 K 15 X7R H VB | 2222 731 38182 | 2.54 |
| CW 15 A 222 K | K 222 K 15 X7R H VB | 2222 731 38222 | 2.54 |
| CW 15 A 222 M | K 222 M 15 X7R H VB | 2222 731 39222 | 2.54 |
| CW 15 A 272 K | K 272 K 15 X7R H VB | 2222 731 38272 | 2.54 |
| CW 15 A 332 K | K 332 K 15 X7R H VB | 2222 731 38332 | 2.54 |
| CW 15 A 332 M | K 332 M 15 X7R H VB | 2222 731 39332 | 2.54 |
| CW 15 A 392 K | K 392 K 15 X7R H VB | 2222 731 38392 | 2.54 |
| CW 15 A 472 K | K 472 K 15 X7R H VB | 2222 731 38472 | 2.54 |
| CW 15 A 472 M | K 472 M 15 X7R H VB | 2222 731 39472 | 2.54 |
| CW 15 A 562 K | K 562 K 15 X7R H VB | 2222 731 38562 | 2.54 |
| CW 15 A 682 K | K 682 K 15 X7R H VB | 2222 731 38682 | 2.54 |
| CW 15 A 682 M | K 682 M 15 X7R H VB | 2222 731 39682 | 2.54 |
| CW 15 A 822 K | K 822 K 15 X7R H VB | 2222 731 38822 | 2.54 |
| CW 15 A 103 K | K 103 K 15 X7R H VB | 2222 731 38103 | 2.54 |
| CW 15 A 103 M | K 103 M 15 X7R H VB | 2222 731 39103 | 2.54 |
| CW 15 A 123 K | K 123 K 15 X7R H VB | 2222 731 38123 | 2.54 |
| CW 20 A 153 K | K 153 K 20 X7R H VB | 2222 731 38153 | 2.54 |
| CW 20 A 153 M | K 153 M 20 X7R H VB | 2222 731 39153 | 2.54 |
| CW 20 A 183 K | K 183 K 20 X7R H VB | 2222 731 38183 | 2.54 |
| CW 20 A 223 K | K 223 K 20 X7R H VB | 2222 731 38223 | 2.54 |
| CW 20 A 223 M | K 223 M 20 X7R H VB | 2222 731 39223 | 2.54 |
| CW 20 A 273 K | K 273 K 20 X7R H VB | 2222 731 38273 | 2.54 |
| CW 20 A 273 M | K 273 M 20 X7R H VB | 2222 731 39273 | 2.54 |
| CW 20 A 333 K | K 333 K 20 X7R H VB | 2222 731 38333 | 2.54 |
| CW 20 A 333 M | K 333 M 20 X7R H VB | 2222 731 39333 | 2.54 |
| CW 20 A 393 M | K 393 M 20 X7R H VB | 2222 731 39393 | 2.54 |
| CW 20 A 473 K | K 473 K 20 X7R H VB | 2222 731 38473 | 2.54 |
| CW 20 A 473 M | K 473 M 20 X7R H VB | 2222 731 39473 | 2.54 |
| CW 20 A 563 K | K 563 K 20 X7R H VB | 2222 731 38563 | 2.54 |
| CW 20 A 683 K | K 683 K 20 X7R H VB | 2222 731 38683 | 2.54 |
| CW 20 A 683 M | K 683 M 20 X7R H VB | 2222 731 39683 | 2.54 |
| CW 20 A 823 M | K 823 M 20 X7R H VB | 2222 731 39823 | 2.54 |
| CW 20 A 104 K | K 104 K 20 X7R H VB | 2222 731 38104 | 2.54 |
| CW 20 A 104 M | K 104 M 20 X7R H VB | 2222 731 39104 | 2.54 |

# Leaded ceramic multilayer capacitors

## Cross reference selection guide

| DISTRIBUTION PART NUMBER | 15-DIGIT CODE[1] | 12NC CODE | PITCH |
|---|---|---|---|
| CW 30 A 124 K | K 124 K 30 X7R H VC | 2222 731 50124 | 5.08 |
| CW 30 A 124 M | K 124 M 30 X7R H VC | 2222 731 51124 | 5.08 |
| CW 30 A 224 K | K 224 K 30 X7R H VC | 2222 731 50224 | 5.08 |
| CW 30 A 224 M | K 224 M 30 X7R H VC | 2222 731 51224 | 5.08 |
| CW 30 A 334 K | K 334 K 30 X7R H VC | 2222 731 50334 | 5.08 |
| CW 15 A 151 K DRM | K 151 K 15 X7R H TT | 2222 731 54151 | 5.08 |
| CW 15 A 151 M DRM | K 151 M 15 X7R H TT | 2222 731 55151 | 5.08 |
| CW 15 A 181 K DRM | K 181 K 15 X7R H TT | 2222 731 54181 | 5.08 |
| CW 15 A 221 K DRM | K 221 K 15 X7R H TT | 2222 731 54221 | 5.08 |
| CW 15 A 221 M DRM | K 221 M 15 X7R H TT | 2222 731 55221 | 5.08 |
| CW 15 A 271 K DRM | K 271 K 15 X7R H TT | 2222 731 54271 | 5.08 |
| CW 15 A 331 K DRM | K 331 K 15 X7R H TT | 2222 731 54331 | 5.08 |
| CW 15 A 331 M DRM | K 331 M 15 X7R H TT | 2222 731 55331 | 5.08 |
| CW 15 A 391 K DRM | K 391 K 15 X7R H TT | 2222 731 54391 | 5.08 |
| CW 15 A 391 M DRM | K 391 M 15 X7R H TT | 2222 731 55391 | 5.08 |
| CW 15 A 471 K DRM | K 471 K 15 X7R H TT | 2222 731 54471 | 5.08 |
| CW 15 A 471 M DRM | K 471 M 15 X7R H TT | 2222 731 55471 | 5.08 |
| CW 15 A 561 K DRM | K 561 K 15 X7R H TT | 2222 731 54561 | 5.08 |
| CW 15 A 561 M DRM | K 561 M 15 X7R H TT | 2222 731 55561 | 5.08 |
| CW 15 A 681 K DRM | K 681 K 15 X7R H TT | 2222 731 54681 | 5.08 |
| CW 15 A 821 K DRM | K 821 K 15 X7R H TT | 2222 731 54821 | 5.08 |
| CW 15 A 102 K DRM | K 102 K 15 X7R H TT | 2222 731 54102 | 5.08 |
| CW 15 A 102 M DRM | K 102 M 15 X7R H TT | 2222 731 55102 | 5.08 |
| CW 15 A 122 K DRM | K 122 K 15 X7R H TT | 2222 731 54122 | 5.08 |
| CW 15 A 122 M DRM | K 122 M 15 X7R H TT | 2222 731 55122 | 5.08 |
| CW 15 A 152 K DRM | K 152 K 15 X7R H TT | 2222 731 54152 | 5.08 |
| CW 15 A 182 K DRM | K 182 K 15 X7R H TT | 2222 731 54182 | 5.08 |
| CW 15 A 222 K DRM | K 222 K 15 X7R H TT | 2222 731 54222 | 5.08 |
| CW 15 A 222 M DRM | K 222 M 15 X7R H TT | 2222 731 55222 | 5.08 |
| CW 15 A 272 K DRM | K 272 K 15 X7R H TT | 2222 731 54272 | 5.08 |
| CW 15 A 332 K DRM | K 332 K 15 X7R H TT | 2222 731 54332 | 5.08 |
| CW 15 A 332 M DRM | K 332 M 15 X7R H TT | 2222 731 55332 | 5.08 |
| CW 15 A 392 K DRM | K 392 K 15 X7R H TT | 2222 731 54392 | 5.08 |
| CW 15 A 472 K DRM | K 472 K 15 X7R H TT | 2222 731 54472 | 5.08 |
| CW 15 A 472 M DRM | K 472 M 15 X7R H TT | 2222 731 55472 | 5.08 |
| CW 15 A 562 K DRM | K 562 K 15 X7R H TT | 2222 731 54562 | 5.08 |
| CW 15 A 682 K DRM | K 682 K 15 X7R H TT | 2222 731 54682 | 5.08 |
| CW 15 A 682 M DRM | K 682 M 15 X7R H TT | 2222 731 55682 | 5.08 |
| CW 15 A 822 K DRM | K 822 K 15 X7R H TT | 2222 731 54822 | 5.08 |
| CW 15 A 103 K DRM | K 103 K 15 X7R H TT | 2222 731 54103 | 5.08 |

# Leaded ceramic multilayer capacitors

## Cross reference selection guide

| DISTRIBUTION PART NUMBER | 15-DIGIT CODE(1) | 12NC CODE | PITCH |
|---|---|---|---|
| CW 15 A 103 M DRM | K 103 M 15 X7R H TT | 2222 731 55103 | 5.08 |
| CW 15 A 123 K DRM | K 123 K 15 X7R H TT | 2222 731 54123 | 5.08 |
| CW 20 A 153 K DRM | K 153 K 15 X7R H TT | 2222 731 54153 | 5.08 |
| CW 20 A 153 M DRM | K 153 M 15 X7R H TT | 2222 731 55153 | 5.08 |
| CW 20 A 183 K DRM | K 183 K 20 X7R H TT | 2222 731 54183 | 5.08 |
| CW 20 A 223 K DRM | K 223 K 20 X7R H TT | 2222 731 54223 | 5.08 |
| CW 20 A 223 M DRM | K 223 M 20 X7R H TT | 2222 731 55223 | 5.08 |
| CW 20 A 273 K DRM | K 273 K 20 X7R H TT | 2222 731 54273 | 5.08 |
| CW 20 A 273 M DRM | K 273 M 20 X7R H TT | 2222 731 55273 | 5.08 |
| CW 20 A 333 K DRM | K 333 K 20 X7R H TT | 2222 731 54333 | 5.08 |
| CW 20 A 333 M DRM | K 333 M 20 X7R H TT | 2222 731 55333 | 5.08 |
| CW 20 A 393 M DRM | K 393 M 20 X7R H TT | 2222 731 55393 | 5.08 |
| CW 20 A 473 K DRM | K 473 K 20 X7R H TT | 2222 731 54473 | 5.08 |
| CW 20 A 473 M DRM | K 473 M 20 X7R H TT | 2222 731 55473 | 5.08 |
| CW 20 A 563 K DRM | K 563 K 20 X7R H TT | 2222 731 54563 | 5.08 |
| CW 20 A 683 K DRM | K 683 K 20 X7R H TT | 2222 731 54683 | 5.08 |
| CW 20 A 683 M DRM | K 683 M 20 X7R H TT | 2222 731 55683 | 5.08 |
| CW 20 A 823 M DRM | K 823 M 20 X7R H TT | 2222 731 55823 | 5.08 |
| CW 20 A 104 K DRM | K 104 K 20 X7R H TT | 2222 731 54104 | 5.08 |
| CW 20 A 104 M DRM | K 104 M 20 X7R H TT | 2222 731 55104 | 5.08 |
| CW 30 A 124 K DRM | K 124 K 30 X7R H TT | 2222 731 54124 | 5.08 |
| CW 30 A 124 M DRM | K 124 M 30 X7R H TT | 2222 731 55124 | 5.08 |
| CW 30 A 224 K DRM | K 224 K 30 X7R H TT | 2222 731 54224 | 5.08 |
| CW 30 A 224 M DRM | K 224 M 30 X7R H TT | 2222 731 55224 | 5.08 |
| CW 30 A 334 K DRM | K 334 K 30 X7R H TT | 2222 731 54334 | 5.08 |

**Note to Table 4**

1. Only the first 13 digits of the 15-digit code are significant for cross reference purposes.

**Table 5** Mono-kap™ conformal radials **Z5U**, ±20%; –20%/+80% tolerance, **50 V**

| DISTRIBUTION PART NUMBER | 15-DIGIT CODE(1) | 12NC CODE | PITCH |
|---|---|---|---|
| CZ 15 C 102 M | K 102 M 15 Z5U F VB | 2222 733 07102 | 2.54 |
| CZ 15 C 152 M | K 152 M 15 Z5U F VB | 2222 733 07152 | 2.54 |
| CZ 15 C 182 Z | K 182 Z 15 Z5U F VB | 2222 733 08182 | 2.54 |
| CZ 15 C 222 M | K 222 M 15 Z5U F VB | 2222 733 07222 | 2.54 |
| CZ 15 C 332 Z | K 332 Z 15 Z5U F VB | 2222 733 08332 | 2.54 |
| CZ 15 C 392 M | K 392 M 15 Z5U F VB | 2222 733 07392 | 2.54 |
| CZ 15 C 472 Z | K 472 Z 15 Z5U F VB | 2222 733 08472 | 2.54 |
| CZ 15 C 682 M | K 682 M 15 Z5U F VB | 2222 733 07682 | 2.54 |
| CZ 15 C 682 Z | K 682 Z 15 Z5U F VB | 2222 733 08682 | 2.54 |

# Leaded ceramic multilayer capacitors

## Cross reference selection guide

| DISTRIBUTION PART NUMBER | 15-DIGIT CODE[1] | 12NC CODE | PITCH |
|---|---|---|---|
| CZ 15 C 822 M | K 822 M 15 Z5U F VB | 2222 733 07822 | 2.54 |
| CZ 15 C 103 M | K 103 M 15 Z5U F VB | 2222 733 07103 | 2.54 |
| CZ 15 C 103 Z | K 103 Z 15 Z5U F VB | 2222 733 08103 | 2.54 |
| CZ 15 C 123 M | K 123 M 15 Z5U F VB | 2222 733 07123 | 2.54 |
| CZ 15 C 123 Z | K 123 Z 15 Z5U F VB | 2222 733 08123 | 2.54 |
| CZ 15 C 183 M | K 183 M 15 Z5U F VB | 2222 733 07183 | 2.54 |
| CZ 15 C 223 M | K 223 M 15 Z5U F VB | 2222 733 07223 | 2.54 |
| CZ 15 C 223 Z | K 223 Z 15 Z5U F VB | 2222 733 08223 | 2.54 |
| CZ 15 C 273 M | K 273 M 15 Z5U F VB | 2222 733 07273 | 2.54 |
| CZ 15 C 333 M | K 333 M 15 Z5U F VB | 2222 733 07333 | 2.54 |
| CZ 15 C 333 Z | K 333 Z 15 Z5U F VB | 2222 733 08333 | 2.54 |
| CZ 20 C 473 M | K 473 M 15 Z5U F VB | 2222 733 07473 | 2.54 |
| CZ 20 C 473 Z | K 473 Z 15 Z5U F VB | 2222 733 08473 | 2.54 |
| CZ 20 C 683 M | K 683 M 15 Z5U F VB | 2222 733 07683 | 2.54 |
| CZ 20 C 683 Z | K 683 Z 15 Z5U F VB | 2222 733 08683 | 2.54 |
| CZ 20 C 104 M | K 104 M 15 Z5U F VB | 2222 733 07104 | 2.54 |
| CZ 20 C 104 Z | K 104 Z 15 Z5U F VB | 2222 733 08104 | 2.54 |
| CZ 20 C 124 M | K 124 M 20 Z5U F VB | 2222 733 07124 | 2.54 |
| CZ 20 C 154 M | K 154 M 20 Z5U F VB | 2222 733 07154 | 2.54 |
| CZ 20 C 154 Z | K 154 Z 20 Z5U F VB | 2222 733 08154 | 2.54 |
| CZ 20 C 184 M | K 184 M 20 Z5U F VB | 2222 733 07184 | 2.54 |
| CZ 20 C 224 M | K 224 M 20 Z5U F VB | 2222 733 07224 | 2.54 |
| CZ 20 C 224 Z | K 224 Z 20 Z5U F VB | 2222 733 08224 | 2.54 |
| CZ 20 C 334 M | K 334 M 20 Z5U F VB | 2222 733 07334 | 2.54 |
| CZ 30 C 474 M | K 474 M 30 Z5U F VC | 2222 733 19474 | 5.08 |
| CZ 30 C 474 Z | K 474 Z 30 Z5U F VC | 2222 733 20474 | 5.08 |
| CZ 30 C 684 M | K 684 M 30 Z5U F VC | 2222 733 19684 | 5.08 |
| CZ 30 C 824 M | K 824 M 30 Z5U F VC | 2222 733 19824 | 5.08 |
| CZ 30 C 105 M | K 105 M 30 Z5U F VC | 2222 733 19105 | 5.08 |
| CZ 30 C 105 Z | K 105 Z 30 Z5U F VC | 2222 733 20105 | 5.08 |
| CZ 15 C 102 M DRM | K 102 M 15 Z5U F TT | 2222 733 23102 | 5.08 |
| CZ 15 C 152 M DRM | K 152 M 15 Z5U F TT | 2222 733 23152 | 5.08 |
| CZ 15 C 182 Z DRM | K 182 Z 15 Z5U F TT | 2222 733 24182 | 5.08 |
| CZ 15 C 222 M DRM | K 222 M 15 Z5U F TT | 2222 733 23222 | 5.08 |
| CZ 15 C 332 Z DRM | K 332 Z 15 Z5U F TT | 2222 733 24332 | 5.08 |
| CZ 15 C 392 M DRM | K 392 M 15 Z5U F TT | 2222 733 23392 | 5.08 |
| CZ 15 C 472 Z DRM | K 472 Z 15 Z5U F TT | 2222 733 24472 | 5.08 |
| CZ 15 C 682 M DRM | K 682 M 15 Z5U F TT | 2222 733 23682 | 5.08 |
| CZ 15 C 682 Z DRM | K 682 Z 15 Z5U F TT | 2222 733 24682 | 5.08 |
| CZ 15 C 822 M DRM | K 822 M 15 Z5U F TT | 2222 733 23822 | 5.08 |

# Leaded ceramic multilayer capacitors

## Cross reference selection guide

| DISTRIBUTION PART NUMBER | 15-DIGIT CODE[1] | 12NC CODE | PITCH |
|---|---|---|---|
| CZ 15 C 103 M DRM | K 103 M 15 Z5U F TT | 2222 733 23103 | 5.08 |
| CZ 15 C 103 Z DRM | K 103 Z 15 Z5U F TT | 2222 733 24103 | 5.08 |
| CZ 15 C 123 M DRM | K 123 M 15 Z5U F TT | 2222 733 23123 | 5.08 |
| CZ 15 C 123 Z DRM | K 123 Z 15 Z5U F TT | 2222 733 24123 | 5.08 |
| CZ 15 C 183 M DRM | K 183 M 15 Z5U F TT | 2222 733 23183 | 5.08 |
| CZ 15 C 223 M DRM | K 223 M 15 Z5U F TT | 2222 733 23223 | 5.08 |
| CZ 15 C 223 Z DRM | K 223 Z 15 Z5U F TT | 2222 733 24223 | 5.08 |
| CZ 15 C 273 M DRM | K 273 M 15 Z5U F TT | 2222 733 23273 | 5.08 |
| CZ 15 C 333 M DRM | K 333 M 15 Z5U F TT | 2222 733 23333 | 5.08 |
| CZ 15 C 333 Z DRM | K 333 Z 15 Z5U F TT | 2222 733 24333 | 5.08 |
| CZ 20 C 473 M DRM | K 473 M 15 Z5U F TT | 2222 733 23473 | 5.08 |
| CZ 20 C 473 Z DRM | K 473 Z 15 Z5U F TT | 2222 733 24473 | 5.08 |
| CZ 20 C 683 M DRM | K 683 M 15 Z5U F TT | 2222 733 23683 | 5.08 |
| CZ 20 C 683 Z DRM | K 683 Z 15 Z5U F TT | 2222 733 24683 | 5.08 |
| CZ 20 C 104 M DRM | K 104 M 15 Z5U F TT | 2222 733 23104 | 5.08 |
| CZ 20 C 104 Z DRM | K 104 Z 15 Z5U F TT | 2222 733 24104 | 5.08 |
| CZ 20 C 124 M DRM | K 124 M 20 Z5U F TT | 2222 733 23124 | 5.08 |
| CZ 20 C 154 M DRM | K 154 M 20 Z5U F TT | 2222 733 23154 | 5.08 |
| CZ 20 C 154 Z DRM | K 154 Z 20 Z5U F TT | 2222 733 24154 | 5.08 |
| CZ 20 C 184 M DRM | K 184 M 20 Z5U F TT | 2222 733 23184 | 5.08 |
| CZ 20 C 224 M DRM | K 224 M 20 Z5U F TT | 2222 733 23224 | 5.08 |
| CZ 20 C 224 Z DRM | K 224 Z 20 Z5U F TT | 2222 733 24224 | 5.08 |
| CZ 20 C 334 M DRM | K 334 M 20 Z5U F TT | 2222 733 23334 | 5.08 |
| CZ 30 C 474 M DRM | K 474 M 30 Z5U F TT | 2222 733 23474 | 5.08 |
| CZ 30 C 474 Z DRM | K 474 Z 30 Z5U F TT | 2222 733 24474 | 5.08 |
| CZ 30 C 684 M DRM | K 684 M 30 Z5U F TT | 2222 733 23684 | 5.08 |
| CZ 30 C 824 M DRM | K 824 M 30 Z5U F TT | 2222 733 23824 | 5.08 |
| CZ 30 C 105 M DRM | K 105 M 30 Z5U F TT | 2222 733 23105 | 5.08 |
| CZ 30 C 105 Z DRM | K 105 Z 30 Z5U F TT | 2222 733 24105 | 5.08 |

**Note to Table 5**

1. Only the first 13 digits of the 15-digit code are significant for cross reference purposes.

**Table 6** Mono-kap™ conformal radials **Z5U**, ±20%; −20%/+80% tolerance, **100 V**

| DISTRIBUTION PART NUMBER | 15-DIGIT CODE(1) | 12NC CODE | PITCH |
|---|---|---|---|
| CZ 15 A 102 M | K 102 M 15 Z5U H VB | 2222 733 39102 | 2.54 |
| CZ 15 A 102 Z | K 102 Z 15 Z5U H VB | 2222 733 40102 | 2.54 |
| CZ 15 A 222 M | K 222 M 15 Z5U H VB | 2222 733 39222 | 2.54 |
| CZ 15 A 332 Z | K 332 Z 15 Z5U H VB | 2222 733 40332 | 2.54 |
| CZ 15 A 392 M | K 392 M 15 Z5U H VB | 2222 733 39392 | 2.54 |
| CZ 15 A 472 M | K 472 M 15 Z5U H VB | 2222 733 39472 | 2.54 |
| CZ 15 A 472 Z | K 472 Z 15 Z5U H VB | 2222 733 40472 | 2.54 |
| CZ 15 A 822 M | K 822 M 15 Z5U H VB | 2222 733 39822 | 2.54 |
| CZ 15 A 103 M | K 103 M 15 Z5U H VB | 2222 733 39103 | 2.54 |
| CZ 15 A 103 Z | K 103 Z 15 Z5U H VB | 2222 733 40103 | 2.54 |
| CZ 15 A 123 M | K 123 M 15 Z5U H VB | 2222 733 39123 | 2.54 |
| CZ 20 A 223 M | K 223 M 20 Z5U H VB | 2222 733 39223 | 2.54 |
| CZ 20 A 223 Z | K 223 Z 20 Z5U H VB | 2222 733 40223 | 2.54 |
| CZ 20 A 333 M | K 333 M 20 Z5U H VB | 2222 733 39333 | 2.54 |
| CZ 20 A 393 M | K 393 M 20 Z5U H VB | 2222 733 39393 | 2.54 |
| CZ 20 A 473 M | K 473 M 20 Z5U H VB | 2222 733 39473 | 2.54 |
| CZ 20 A 683 M | K 683 M 20 Z5U H VB | 2222 733 39683 | 2.54 |
| CZ 20 A 104 M | K 104 M 20 Z5U H VB | 2222 733 39104 | 2.54 |
| CZ 30 A 224 M | K 224 M 30 Z5U H VC | 2222 733 51224 | 5.08 |
| CZ 30 A 334 M | K 334 M 30 Z5U H VC | 2222 733 51334 | 5.08 |
| CZ 30 A 474 M | K 474 M 30 Z5U H VC | 2222 733 51474 | 5.08 |
| CZ 30 A 474 Z | K 474 Z 30 Z5U H VC | 2222 733 52474 | 5.08 |
| CZ 15 A 102 M DRM | K 102 M 15 Z5U H TT | 2222 733 55102 | 5.08 |
| CZ 15 A 102 Z DRM | K 102 Z 15 Z5U H TT | 2222 733 56102 | 5.08 |
| CZ 15 A 222 M DRM | K 222 M 15 Z5U H TT | 2222 733 55222 | 5.08 |
| CZ 15 A 332 Z DRM | K 332 Z 15 Z5U H TT | 2222 733 56332 | 5.08 |
| CZ 15 A 392 M DRM | K 392 M 15 Z5U H TT | 2222 733 55392 | 5.08 |
| CZ 15 A 472 M DRM | K 472 M 15 Z5U H TT | 2222 733 55472 | 5.08 |
| CZ 15 A 472 Z DRM | K 472 Z 15 Z5U H TT | 2222 733 56472 | 5.08 |
| CZ 15 A 822 M DRM | K 822 M 15 Z5U H TT | 2222 733 55822 | 5.08 |
| CZ 15 A 103 M DRM | K 103 M 15 Z5U H TT | 2222 733 55103 | 5.08 |
| CZ 15 A 103 Z DRM | K 103 Z 15 Z5U H TT | 2222 733 56103 | 5.08 |
| CZ 15 A 123 M DRM | K 123 M 15 Z5U H TT | 2222 733 55123 | 5.08 |
| CZ 20 A 223 M DRM | K 223 M 20 Z5U H TT | 2222 733 55223 | 5.08 |
| CZ 20 A 223 Z DRM | K 223 Z 20 Z5U H TT | 2222 733 56223 | 5.08 |
| CZ 20 A 333 M DRM | K 333 M 20 Z5U H TT | 2222 733 55333 | 5.08 |
| CZ 20 A 393 M DRM | K 393 M 20 Z5U H TT | 2222 733 55393 | 5.08 |
| CZ 20 A 473 M DRM | K 473 M 20 Z5U H TT | 2222 733 55473 | 5.08 |
| CZ 20 A 683 M DRM | K 683 M 20 Z5U H TT | 2222 733 55683 | 5.08 |

| DISTRIBUTION PART NUMBER | 15-DIGIT CODE(1) | 12NC CODE | PITCH |
|---|---|---|---|
| CZ 20 A 104 M DRM | K 104 M 20 Z5U H TT | 2222 733 55104 | 5.08 |
| CZ 20 A 104 Z DRM | K 104 Z 20 Z5U H TT | 2222 733 56104 | 5.08 |
| CZ 20 A 124 M DRM | K 124 M 20 Z5U H TT | 2222 733 55124 | 5.08 |
| CZ 20 A 154 M DRM | K 154 M 30 Z5U H TT | 2222 733 55154 | 5.08 |
| CZ 30 A 224 M DRM | K 224 M 30 Z5U H TT | 2222 733 55224 | 5.08 |
| CZ 30 A 334 M DRM | K 334 M 30 Z5U H TT | 2222 733 55334 | 5.08 |
| CZ 30 A 474 M DRM | K 474 M 30 Z5U H TT | 2222 733 55474 | 5.08 |
| CZ 30 A 474 Z DRM | K 474 Z 30 Z5U H TT | 2222 733 56474 | 5.08 |

**Note to Table 6**

1. Only the first 13 digits of the 15-digit code are significant for cross reference purposes.

**Table 7** Mono-axial™ conformal axials **NP0 (C0G)**, 5% tolerance, **50 V**

| DISTRIBUTION PART NUMBER | 15-DIGIT CODE(1) | 12NC CODE |
|---|---|---|
| A 40 C 101 J DRM | A 101 J 15 C0G F VV | 2222 740 09101 |
| A 40 C 151 J DRM | A 151 J 15C0G F VV | 2222 740 09151 |
| A 40 C 181 J DRM | A 181 J 15 C0G F VV | 2222 740 09181 |
| A 40 C 221 J DRM | A 221 J 15 C0G F VV | 2222 740 09221 |
| A 40 C 331 J DRM | A 331 J 15 C0G F VV | 2222 740 09331 |
| A 40 C 391 J DRM | A 391 J 15 C0G F VV | 2222 740 09391 |
| A 40 C 471 J DRM | A 471 J 15 C0G F VV | 2222 740 09471 |
| A 40 C 561 J DRM | A 561 J 15 C0G F VV | 2222 740 09561 |
| A 40 C 681 J DRM | A 681 J 15 C0G F VV | 2222 740 09681 |
| A 40 C 102 J DRM | A 102 J 15 C0G F VV | 2222 740 09102 |

**Note**

1. Only the first 13 digits of the 15-digit code are significant for cross reference purposes.

**Table 8** Mono-axial™ conformal axials **NP0 (C0G)**, 5% tolerance, **100 V**

| DISTRIBUTION PART NUMBER | 15-DIGIT CODE(1) | 12NC CODE |
|---|---|---|
| A 40 A 100 J DRM | A 100 J 15 C0G H VV | 2222 740 41109 |
| A 40 A 150 J DRM | A 150 J 15 C0G H VV | 2222 740 41159 |
| A 40 A 180 J DRM | A 180 J 15 C0G H VV | 2222 740 41189 |
| A 40 A 220 J DRM | A 220 J 15 C0G H VV | 2222 740 41229 |
| A 40 A 270 J DRM | A 270 J 15 C0G H VV | 2222 740 41279 |
| A 40 A 330 J DRM | A 330 J 15 C0G H VV | 2222 740 41339 |
| A 40 A 470 J DRM | A 470 J 15 C0G H VV | 2222 740 41479 |
| A 40 A 680 J DRM | A 680 J 15 C0G H VV | 2222 740 41689 |
| A 40 A 820 J DRM | A 820 J 15 C0G H VV | 2222 740 41829 |

**Note**

1. Only the first 13 digits of the 15-digit code are significant for cross reference purposes.

**Table 9** Mono-axial™ conformal axials **X7R**, 10% tolerance, **50 V**

| DISTRIBUTION PART NUMBER | 15-DIGIT CODE(1) | 12NC CODE |
|---|---|---|
| A 41 C 332 K DRM | A 332 K 15 X7R F VV | 2222 741 10332 |
| A 41 C 472 K DRM | A 472 K 15 X7R F VV | 2222 741 10472 |
| A 41 C 103 K DRM | A 103 K 15 X7R F VV | 2222 741 10103 |
| A 41 C 153 K DRM | A 153 K 15 X7R F VV | 2222 741 10153 |
| A 41 C 223 K DRM | A 223 K 15 X7R F VV | 2222 741 10223 |
| A 41 C 333 K DRM | A 333 K 15 X7R F VV | 2222 741 10333 |
| A 41 C 473 K DRM | A 473 K 20 X7R F VV | 2222 741 10473 |
| A 41 C 563 K DRM | A 563 K 20 X7R F VV | 2222 741 10563 |
| A 41 C 104 K DRM | A 104 K 20 X7R F VV | 2222 741 10104 |

**Note**

1. Only the first 13 digits of the 15-digit code are significant for cross reference purposes.

**Table 10** Mono-axial™ conformal axials **X7R**, 10% tolerance, **100 V**

| DISTRIBUTION PART NUMBER | 15-DIGIT CODE(1) | 12NC CODE |
|---|---|---|
| A 41 A 221 K DRM | A 221 K 15 X7R H VV | 2222 741 42221 |
| A 41 A 271 K DRM | A 271 K 15 X7R H VV | 2222 741 42271 |
| A 41 A 331 K DRM | A 331 K 15 X7R H VV | 2222 741 42331 |
| A 41 A 471 K DRM | A 471 K 15 X7R H VV | 2222 741 42471 |
| A 41 A 681 K DRM | A 681 K 15 X7R H VV | 2222 741 42681 |
| A 41 A 821 K DRM | A 821 K 15 X7R H VV | 2222 741 42821 |
| A 41 A 102 K DRM | A 102 K 15 X7R H VV | 2222 741 42102 |
| A 41 A 122 K DRM | A 122 K 15 X7R H VV | 2222 741 42122 |
| A 41 A 152 K DRM | A 152 K 15 X7R H VV | 2222 741 42152 |
| A 41 A 222 K DRM | A 222 K 15 X7R H VV | 2222 741 42222 |

**Note**

1. Only the first 13 digits of the 15-digit code are significant for cross reference purposes.

**Table 11** Mono-axial™ conformal axials **Z5U, M and Z** tolerance codes, **50 V**

| DISTRIBUTION PART NUMBER | 15-DIGIT CODE(1) | 12NC CODE |
|---|---|---|
| A 42 C 103 M DRM | A 103 M 15 Z5U F VV | 2222 742 11103 |
| A 42 C 103 Z DRM | A 103 Z 15 Z5U F VV | 2222 742 12103 |
| A 42 C 223 M DRM | A 223 M 15 Z5U F VV | 2222 742 11223 |
| A 42 C 333 M DRM | A 333 M 15 Z5U F VV | 2222 742 11333 |
| A 42 C 473 M DRM | A 473 M 15 Z5U F VV | 2222 742 11473 |
| A 42 C 473 Z DRM | A 473 Z 15 Z5U F VV | 2222 742 12473 |
| A 42 C 104 M DRM | A 104 M 15 Z5U F VV | 2222 742 11104 |
| A 42 C 104 Z DRM | A 104 Z 15 Z5U F VV | 2222 742 12104 |
| A 42 C 224 M DRM | A 224 M 20 Z5U F VV | 2222 742 11224 |
| A 42 C 224 Z DRM | A 224 Z 20 Z5U F VV | 2222 742 12224 |
| A 42 C 274 Z DRM | A 274 Z 30 Z5U F VV | 2222 742 12274 |
| A 42 C 334 M DRM | A 334 M 30 Z5U F VV | 2222 742 11334 |
| A 42 C 334 Z DRM | A 334 Z 30 Z5U F VV | 2222 742 12334 |
| A 42 C 474 Z DRM | A 474 Z 30 Z5U F VV | 2222 742 12474 |

**Note**

1. Only the first 13 digits of the 15-digit code are significant for cross reference purposes.

# MINIATURE CERAMIC PLATE CAPACITORS


| | Page |
|---|---|
| NUMERICAL INDEX | 144 |
| SELECTION GUIDE | 149 |
| GENERAL DATA | |
| Current and maintenance types | 152 |
| Composition, colour coding and marking | 155 |
| Packaging | 156 |
| Tests and requirements | 165 |
| Clear text code | 171 |
| PRODUCT DATA | |
| Precision capacitors NP0 | 174 |
| Class 1, 100 V (DC) flanged | 182 |
| Class 2, 63 V and 100 V (DC) flanged | 191 |
| Class 1, 500 V (DC) flanged | 206 |
| Class 2, 500 V (DC) flanged | 217 |
| Class 1, 1000 V (DC) flanged | 223 |
| Class 2, 1000 V (DC) 2C2 and 2D1 flanged | 228 |
| Class 2, 1000 V (DC) 2E2 flanged | 233 |
| Sample kits | 239 |

## NUMERICAL INDEX FOR MINIATURE CERAMIC PLATE CAPACITORS

Flanged, preferred types.

| 12NC 2222 ... ..... | | TC | COLOUR CODE | CLASS | CAPACITANCE RANGE (pF) | $U_{R(DC)}$ (V) | $H_0$ (mm) | LEAD LENGTH (mm) | PITCH | PACKAGING | PAGE |
|---|---|---|---|---|---|---|---|---|---|---|---|
| 629 | 08... | 2F6 (Y5V) | green | 2 | 1000 to 47000 | 63 | – | >13 | 1e | loose | 195 |
| | 09... | | | | | | – | >13 | 2e | loose | |
| | 18... | | | | | | – | 4 ±0.5 | 1e | loose | |
| | 19... | | | | | | – | 4 ±0.5 | 2e | loose | |
| | 51... | | | | | | 18.25 | – | 1e | tape on reel | |
| | 53... | | | | | | 18.25 | – | 2e | tape on reel | |
| | 61... | | | | | | 18.25 | – | 1e | ammopack | |
| | 63... | | | | | | 18.25 | – | 2e | ammopack | |
| 630 | 08... | 2C2-2E1 (X5S/X7T) | yellow | 2 | 180 to 6800 | 100 | – | >13 | 1e | loose | 194 |
| | 09... | | | | | | – | >13 | 2e | loose | |
| | 18... | | | | | | – | 4 ±0.5 | 1e | loose | |
| | 19... | | | | | | – | 4 ±0.5 | 2e | loose | |
| | 51... | | | | | | 18.25 | – | 1e | tape on reel | |
| | 53... | | | | | | 18.25 | – | 2e | tape on reel | |
| | 61... | | | | | | 18.25 | – | 1e | ammopack | |
| | 63... | | | | | | 18.25 | – | 2e | ammopack | |
| 640 | 08... | 2E2 (X5U) | blue | 2 | 1000 to 15000 | 100 | – | >13 | 1e | loose | 195 |
| | 09... | | | | | | – | >13 | 2e | loose | |
| | 18... | | | | | | – | 4 ±0.5 | 1e | loose | |
| | 19... | | | | | | – | 4 ±0.5 | 2e | loose | |
| | 51... | | | | | | 18.25 | – | 1e | tape on reel | |
| | 53... | | | | | | 18.25 | – | 2e | tape on reel | |
| | 61... | | | | | | 18.25 | – | 1e | ammopack | |
| | 63... | | | | | | 18.25 | – | 2e | ammopack | |

| 12NC 2222 ... ..... | | TC | COLOUR CODE | CLASS | CAPACITANCE RANGE (pF) | $U_{R(DC)}$ (V) | $H_0$ (mm) | LEAD LENGTH (mm) | PITCH | PACKAGING | PAGE |
|---|---|---|---|---|---|---|---|---|---|---|---|
| 652 | **03/04...** | P100 | red/violet | 1 | 0.47 to 33 | 500 | – | >13 | 2e | loose | 208 |
| | **09/10...** | NP0 | black | | 0.82 to 150 | | | | | | |
| | **33/34...** | N150 | orange | | 2.2 to 150 | | | | | | |
| | **57/58...** | N750 | violet | | 1.8 to 150 | | | | | | |
| | **69/70...** | N1500 | orange/orange | | 8.2 to 330 | | | | | | |
| 653 | **03/04...** | P100 | red/violet | 1 | 0.47 to 33 | 500 | – | 4 ±0.5 | 2e | loose | 208 |
| | **09/10...** | NP0 | black | | 0.82 to 150 | | | | | | |
| | **33/34...** | N150 | orange | | 2.2 to 150 | | | | | | |
| | **57/58...** | N750 | violet | | 1.8 to 150 | | | | | | |
| | **69/70...** | N1500 | orange/orange | | 8.2 to 330 | | | | | | |
| 654 | **03/04...** | P100 | red/violet | 1 | 0.47 to 33 | 500 | 18.25 | – | 2e | tape on reel | 208 |
| | **09/10...** | NP0 | black | | 0.82 to 150 | | | | | | |
| | **33/34...** | N150 | orange | | 2.2 to 150 | | | | | | |
| | **57/58...** | N750 | violet | | 1.8 to 150 | | | | | | |
| | **69/70...** | N1500 | orange/orange | | 8.2 to 330 | | | | | | |
| 655 | **09...** | 2C2-2E1 (K2000) | yellow | 2 | 100 to 4700 | 500 | – | >13 | 2e | loose | 219 |
| | **19...** | | yellow | | | | – | 4 ±0.5 | | loose | |
| | **53...** | | yellow | | | | 18.25 | – | | tape on reel | |
| | **63...** | | yellow | | | | 18.25 | – | | ammopack | |
| 678 | **03/04...** | P100 | red/violet | 1 | 0.56 to 47 | 100 | 18.25 | – | 1e | tape on reel | 184 |
| | **09/10...** | NP0 | black | | 1.8 to 220 | | | | | | |
| | **33/34...** | N150 | orange | | 3.9 to 220 | | | | | | |
| | **57/58...** | N750 | violet | | 3.9 to 330 | | | | | | |
| | **70...** | N1500 | orange/orange | | 18 to 560 | | | | | | |
| | **90...** | NP0 | black | | 1 to 240 | | | | | | 176 |

| 12NC 2222 ... ..... | | TC | COLOUR CODE | CLASS | CAPACITANCE RANGE (pF) | $U_{R(DC)}$ (V) | $H_0$ (mm) | LEAD LENGTH (mm) | PITCH | PACKAGING | PAGE |
|---|---|---|---|---|---|---|---|---|---|---|---|
| 679 | **03/04...** | P100 | red/violet | 1 | 0.56 to 47 | 100 | 18.25 | – | 2e | tape on reel | 184 |
| | **09/10...** | NP0 | black | | 1.8 to 220 | | | | | | |
| | **33/34...** | N150 | orange | | 3.9 to 220 | | | | | | |
| | **57/58...** | N750 | violet | | 3.9 to 330 | | | | | | |
| | **70...** | N1500 | orange/orange | | 18 to 560 | | | | | | |
| | **90...** | NP0 | black | | 1 to 240 | | | | | | 176 |
| 680 | **03/04...** | P100 | red/violet | 1 | 0.56 to 47 | 100 | – | >13 | 1e | loose | 184 |
| | **09/10...** | NP0 | black | | 1.8 to 220 | | | | | | |
| | **33/34...** | N150 | orange | | 3.9 to 220 | | | | | | |
| | **57/58...** | N750 | violet | | 3.9 to 330 | | | | | | |
| | **70...** | N1500 | orange/orange | | 18 to 560 | | | | | | |
| | **90...** | NP0 | black | | 1 to 240 | | | | | | 176 |
| 681 | **03/04...** | P100 | red/violet | 1 | 0.56 to 47 | 100 | – | >13 | 2e | loose | 184 |
| | **09/10...** | NP0 | black | | 1.8 to 220 | | | | | | |
| | **33/34...** | N150 | orange | | 3.9 to 220 | | | | | | |
| | **57/58...** | N750 | violet | | 3.9 to 330 | | | | | | |
| | **70...** | N1500 | orange/orange | | 18 to 560 | | | | | | |
| | **90...** | NP0 | black | | 1 to 240 | | | | | | 176 |
| 682 | **03/04...** | P100 | red/violet | 1 | 0.56 to 47 | 100 | – | 4 ±0.5 | 1e | loose | 184 |
| | **09/10...** | NP0 | black | | 1.8 to 220 | | | | | | |
| | **33/34...** | N150 | orange | | 3.9 to 220 | | | | | | |
| | **57/58...** | N750 | violet | | 3.9 to 330 | | | | | | |
| | **70...** | N1500 | orange/orange | | 18 to 560 | | | | | | |
| | **90...** | NP0 | black | | 1 to 240 | | | | | | 176 |
| 683 | **03/04...** | P100 | red/violet | 1 | 0.56 to 47 | 100 | – | 4 ±0.5 | 2e | loose | 184 |
| | **09/10...** | NP0 | black | | 1.8 to 220 | | | | | | |
| | **33/34...** | N150 | orange | | 3.9 to 220 | | | | | | |
| | **57/58...** | N750 | violet | | 3.9 to 330 | | | | | | |
| | **70...** | N1500 | orange/orange | | 18 to 560 | | | | | | |
| | **90...** | NP0 | black | | 1 to 240 | | | | | | 176 |

| 12NC 2222 ... ..... | | TC | COLOUR CODE | CLASS | CAPACITANCE RANGE (pF) | $U_{R(DC)}$ (V) | $H_0$ (mm) | LEAD LENGTH (mm) | PITCH | PACKAGING | PAGE |
|---|---|---|---|---|---|---|---|---|---|---|---|
| 686 | **03/04...** | P100 | red/violet | 1 | 0.56 to 47 | 100 | 16 | – | 1e | ammopack | 184 |
| | **09/10...** | NP0 | black | | 1.8 to 220 | | | | | | |
| | 27/28... | N075 | red | | 3.9 to 120 | | | | | | |
| | **33/34...** | N150 | orange | | 3.9 to 220 | | | | | | |
| | 39/40... | N220 | yellow | | 3.9 to 150 | | | | | | |
| | 45/46... | N330 | green | | 4.7 to 180 | | | | | | |
| | 51/52... | N470 | blue | | 6.8 to 220 | | | | | | |
| | **57/58...** | N750 | violet | | 3.9 to 330 | | | | | | |
| | **70...** | N1500 | orange/orange | | 18 to 560 | | | | | | |
| | **90...** | NP0 | black | | 1 to 240 | | | | | | 176 |
| 688 | **03/04...** | P100 | red/violet | 1 | 0.56 to 47 | 100 | 18.25 | – | 1e | ammopack | 184 |
| | **09/10...** | NP0 | black | | 1.8 to 220 | | | | | | |
| | **33/34...** | N150 | orange | | 3.9 to 220 | | | | | | |
| | **57/58...** | N750 | violet | | 3.9 to 330 | | | | | | |
| | **70...** | N1500 | orange/orange | | 18 to 560 | | | | | | |
| | **90...** | NP0 | black | | 1 to 240 | | | | | | 176 |
| 689 | **03/04...** | P100 | red/violet | 1 | 0.56 to 47 | 100 | 18.25 | – | 2e | ammopack | 184 |
| | **09/10...** | NP0 | black | | 1.8 to 220 | | | | | | |
| | **33/34...** | N150 | orange | | 3.9 to 220 | | | | | | |
| | **57/58...** | N750 | violet | | 3.9 to 330 | | | | | | |
| | **70...** | N1500 | orange/orange | | 18 to 560 | | | | | | |
| | **90...** | NP0 | black | | 1 to 240 | | | | | | 176 |
| 691 | **03/04...** | P100 | red/violet | 1 | 0.47 to 33 | 500 | 18.25 | – | 2e | ammopack | 208 |
| | **09/10...** | NP0 | black | | 0.82 to 150 | | | | | | |
| | **33/34...** | N150 | orange | | 2.2 to 150 | | | | | | |
| | **57/58...** | N750 | violet | | 1.8 to 150 | | | | | | |
| | **69/70...** | N1500 | orange/orange | | 8.2 to 330 | | | | | | |

| 12NC 2222 ... ..... | | TC | COLOUR CODE | CLASS | CAPACITANCE RANGE (pF) | $U_{R(DC)}$ (V) | $H_0$ (mm) | LEAD LENGTH (mm) | PITCH | PACKAGING | PAGE |
|---|---|---|---|---|---|---|---|---|---|---|---|
| 693 | 09... | 2C2-2E1 (X5S/X7T) | yellow | 2 | 100 to 1200 | 1000 | – | >13 | 2e | loose | 227 |
| | 19... | | | | | | – | 4 ±0.5 | | loose | |
| | 53... | | | | | | 18.25 | – | | tape on reel | |
| | 63... | | | | | | 18.25 | – | | ammopack | |
| 694 | 09... | SL | – | 1 | 0.47 to 120 | 1000 | – | >13 | 2e | loose | 222 |
| | 19... | | | | | | – | 4 ±0.5 | | loose | |
| | 53... | | | | | | 18.25 | – | | tape on reel | |
| | 63... | | | | | | 18.25 | – | | ammopack | |
| | 64... | | | | | | 16 | – | | ammopack | |
| 695 | 09... | 2E2 (X5U) | blue | 2 | 270 to 3300 | 1000 | – | >13 | 2e | loose | 232 |
| | 19... | | | | | | – | 4 ±0.5 | | loose | |
| | 53... | | | | | | 18.25 | – | | tape on reel | |
| | 63... | | | | | | 18.25 | – | | ammopack | |

## SELECTION GUIDE FOR MINIATURE CERAMIC PLATE CAPACITORS

| PACKAGE OUTLINE | TC | $U_{R(DC)}$ (V) | CAP. RANGE (pF) | CAP. TOL. | CATALOGUE NUMBERS 2222 ... ..... | CLIMATIC CATEGORY | TYPICAL CIRCUITS | TARGET APPLICATION | PAGE |
|---|---|---|---|---|---|---|---|---|---|
| **Class 1, standard types, leads with flanges** | | | | | | | | | |
| 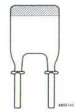 | P100; NP0; N1500 | 100 | 0.56 to 560 | ±0.25 pF ±2% | 678 ..... to 683 .....; 688 .....; 689 ..... | 55/125/56 | high frequency; tuning; temperature compensation; precision clocking; high stability | general industrial; consumer; automotive | 184 |
| | N150; N750 | | | | | 55/085/21 | | | |
| | P100; NP0; N1500 | 500 | 0.47 to 330 | ±0.25 pF ±2% | 652 ..... to 654 .....; 691 ..... | 55/150/56 | high frequency; SMPS; power supplies; temperature compensation; precision clocking; high stability | general industrial; consumer; automotive | 208 |
| 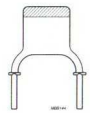 | N150; N750 | | | | | 55/085/21 | | | |
| | SL | 1000 | 0.47 to 120 | ±0.25 pF ±5% | 694 09...; 694 19...; 694 53...; 694 63... | 55/150/56 | SMPS; HV systems; HV power supplies; high stability | high stress circuits; high stress automotive; professional circuits; measuring instruments | 222 |
| **Class 1, precision types, leads with flanges** | | | | | | | | | |
| 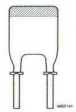 | NP0 | 100 | 0.82 to 240 | ±0.1 pF ±1% | 678 90... to 683 90...; 688 90...; 689 90... | 55/125/56 | high frequency; tuning; precision clocking; high stability | high stress circuits; high stress automotive | 176 |
| 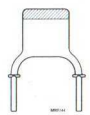 | NP0 | 500 | 0.82 to 150 | ±0.1 pF ±1% | 652 90... to 654 90...; 691 90...; note 1 | 55/125/56 | SMPS; power supplies; high frequency; tuning; high stability | high stress circuits; high stress automotive | 208 |

**Note**

1. Available on request.

**SELECTION GUIDE FOR MINIATURE CERAMIC PLATE CAPACITORS (continued)**

| PACKAGE OUTLINE | TC | $U_{R(DC)}$ (V) | CAP. RANGE (pF) | CAP. TOL. | CATALOGUE NUMBERS 2222 ... ..... | CLIMATIC CATEGORY | TYPICAL CIRCUITS | TARGET APPLICATION | PAGE |
|---|---|---|---|---|---|---|---|---|---|
| **Class 2, leads with flanges** | | | | | | | | | |
| 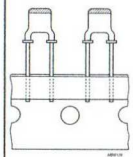 | 2C2 (X5S/X7T) | 100 | 180 to 6800 | ±10% | 630 08...; 630 18...; 630 09...; 630 19...; 630 51...; 630 61...; 630 53...; 630 63... | 55/125/56 | coupling/decoupling; filtering; high stability | high stress circuits; high stress automotive; professional circuits; measuring instruments | 193 |
| | 2E2 (X5U) | 100 | 1000 to 15000 | –20/+50% | 640 08...; 640 18...; 640 09...; 640 19...; 640 51...; 640 61...; 640 53...; 640 63... | 55/105/21 | coupling/decoupling; filtering; medium stability | high stress circuits; high stress automotive; professional circuits; measuring instruments | 193 |
| 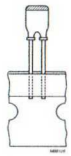 | 2F6 (Y5V) | 63 | 1000 to 47000 | –20/+80% | 629 08...; 629 18...; 629 09...; 629 19...; 629 51...; 629 61...; 629 53...; 629 63... | 10/085/21 | general purpose; coupling/decoupling; filtering; low stability | general industrial; consumer | 193 |
| | 2C2 (X5S/X7T) | 500 | 100 to 4700 | ±10% | 655 09...; 655 19...; 655 53...; 655 63... | 55/150/56 | SMPS; HV systems; HV power supplies; coupling/decoupling; filtering; high stability | high stress circuits; high stress automotive; professional circuits; measuring instruments | 219 |

# Miniature ceramic plate capacitors

## Selection guide

| PACKAGE OUTLINE | TC | $U_{R(DC)}$ (V) | CAP. RANGE (pF) | CAP. TOL. | CATALOGUE NUMBERS 2222 ... ..... | CLIMATIC CATEGORY | TYPICAL CIRCUITS | TARGET APPLICATION | PAGE |
|---|---|---|---|---|---|---|---|---|---|
|  | 2C2 (X5S/X7T) | 1000 | 100 to 1200 | ±10% | 693 09...; 693 19...; 693 53...; 693 63... | 55/150/56 | SMPS; HV systems; HV power supplies; coupling/decoupling; filtering; high stability | high stress circuits; high stress automotive; professional circuits; measuring instruments | 227 |
| | 2E2 (X5U) | 1000 | 270 to 3300 | ±20% | 695 09...; 695 19...; 695 53...; 695 63... | 55/105/56 | SMPS; HV systems; HV power supplies; coupling/decoupling; filtering; medium stability | high stress circuits; high stress automotive; professional circuits; measuring instruments | 232 |

# Miniature ceramic plate capacitors — General data

## CURRENT AND MAINTENANCE TYPES

Current ceramic plate capacitors have leads provided with a flange. They are available in a wide variety of executions. The flange ensures excellent solderability and component height definition on the printed-circuit boards. These capacitors are suitable for both hand mounting and automatic insertion.

Ceramic plate capacitors **without flanged leads** are **not** for design-in. They are for maintenance purposes only. They are not available on tape.

The electrical properties of capacitors with flanged leads are the same as the electrical properties of capacitors with straight leads.

## TC DEFINITION AND RELEVANT CODES

The variation of capacitance with temperature is determined by:

1. Temperature coefficient of capacitance.
2. Temperature characteristic of capacitance.

The temperature coefficient of capacitance is applicable to class 1 capacitors. They show a predictable and almost linear change of capacitance with temperature. This makes them suitable for temperature compensation in resonant and tuning circuits (N150 to N1500), and in all critical applications which require a very small capacitance change with temperature (NP0).

The dielectric number indicates the nominal value of the temperature coefficient of capacitance with the letters 'P' or 'N' indicating a positive or negative capacitance change with the temperature. For example, P100 indicates a positive temperature coefficient of $100 \times 10^{-6}/°C$ and N750 indicates a negative temperature coefficient of $750 \times 10^{-6}/°C$. In accordance with *"RS198"*, the P100 is identified with the code M7G and the N750 with the code U2J.

The temperature characteristic of capacitance is specified by means of letters and numbers denoting the maximum permissible capacitance change from 20 °C over a specified temperature range. The *"EIA publication RS198"* has a similar coding system but the reference temperature is 25 °C.

Tables 1 and 2 show the temperature characteristic of capacitance in accordance with *"IEC 384-9"* and *"RS198"* respectively.

Table 3 shows the temperature coefficient codes in accordance with *"RS198"*.

As an example, a capacitor with a capacitance change of –56 to +20% in the temperature range from –55 to +85 °C will be defined as a class 2E2 capacitor in accordance with *"IEC 384-9"* and X5U in accordance with *"RS198"*.

Also, a capacitor with a temperature change of 0 ±30 ppm will be defined as C0G in accordance with *"RS198"* (see Table 3) and NP0 in accordance with *"IEC 384-8"*.

**Table 1** Temperature characteristic of capacitance in accordance with *"IEC 384-9"*

| SUB-CLASS LETTER CODE | ΔC/C at 20 °C (%) | | PREFERRED CATEGORY TEMPERATURE RANGE (P) AND CORRESPONDING NUMBER CODE | | | | |
|---|---|---|---|---|---|---|---|
| | WITHOUT DC VOLTAGE APPLIED | WITH RATED DC VOLTAGE APPLIED | –55/+125 °C | –55/+85 °C | –40/+85 °C | –25/+85 °C | –10/+85 °C |
| | | | 1 | 2 | 3 | 4 | 6 |
| 2B | ±10 | +10/–15 | – | P | P | P | – |
| 2C | ±20 | +20/–30 | P | P | P | – | – |
| 2D | +20/–30 | +20/–40 | – | – | – | P | – |
| 2E | +22/–56 | +22/–70 | – | P | P | P | P |
| 2F | +30/–80 | +30/–90 | – | P | P | P | P |
| 2R | ±15 | +15/–40 | P | – | – | – | – |
| 2X | ±15 | +15/–25 | P | – | – | – | – |

**Table 2** Temperature characteristics in accordance with *"RS198"*

| FIRST DIGIT IS MINIMUM TEMPERATURE CODE | SECOND DIGIT IS MAXIMUM TEMPERATURE CODE | LAST DIGIT IS RELATED TO ΔC/C at 25 °C (%) |
|---|---|---|
| X = –55 °C | 5 = +85 °C | F = ±7.5 |
| Y = –30 °C | 6 = +105 °C | P = ±10 |
| Z = +10 °C | 7 = +125 °C | R = ±15 |
| – | 8 = +150 °C | S = ±22 |
| – | 9 = +200 °C | T = –33 to +22 |
| – | – | U = –56 to +22 |
| – | – | V = –82 to +22 |

**Table 3** Temperature coefficient in accordance with *"RS198"*

| SIGNIFICANT FIGURES | MULTIPLIER | TOLERANCE ppm (°C) |
|---|---|---|
| C = 0.0 | 0 = –1 | G = ±30 |
| M = 1 | 1 = –10 | H = ±60 |
| P = 1.5 | 2 = –100 | J = ±120 |
| R = 2.2 | 3 = –1000 | K = ±250 |
| S = 3.3 | 5 = +1 | L = ±500 |
| T = 4.7 | 6 = +10 | M = ±1000 |
| U = 7.5 | 7 = +100 | N = ±2500 |
| – | 8 = +1000 | – |

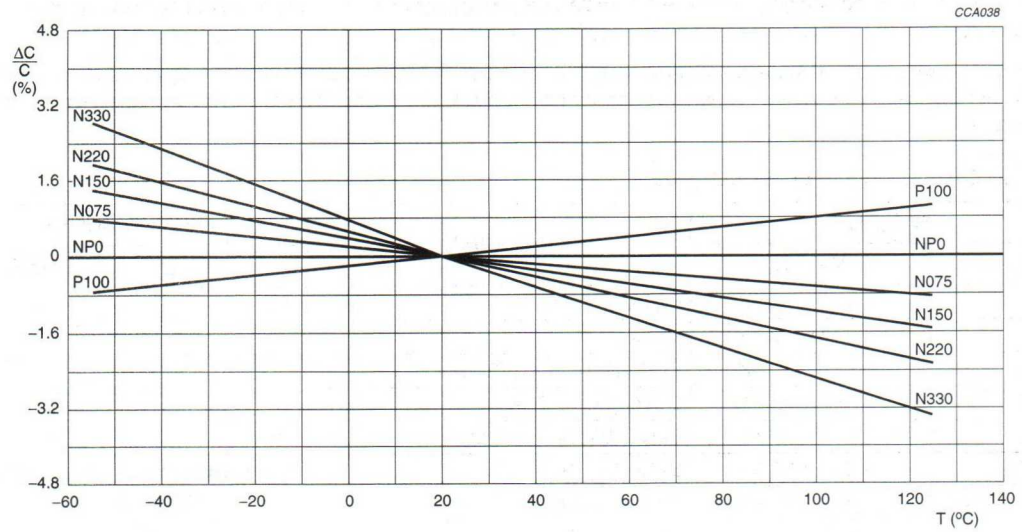


Fig.1 Capacitance change as a function of temperature.

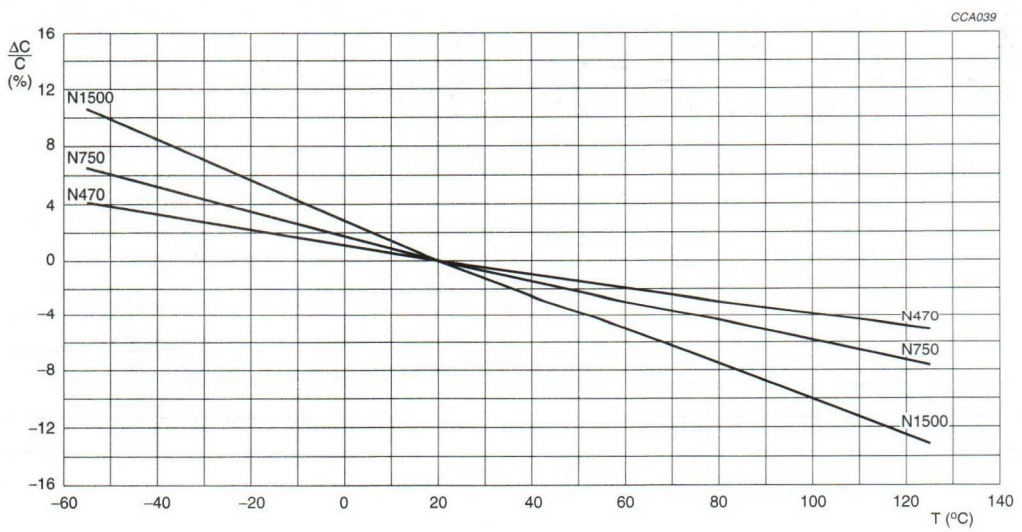


Fig.2 Capacitance change as a function of temperature.

## COMPOSITION, COLOUR CODING AND MARKING

Tables 4 and 5 show the composition of the materials used in ceramic plate capacitors. Colour coding indicating the temperature coefficient or temperature dependency is given.

The capacitance is marked on the body of the plate capacitors in a 3-digit code: two numbers corresponding with the numerical capacitance value and one letter indicating the multiplier and the decimal point. For example: 1p0 = 1.0 pF, 22n = 22 nF.

**Table 4** Class 1: $\varepsilon_r$ = 6 up to 250; TC types

| TC TYPES | | MATERIAL | COLOUR CODES | |
|---|---|---|---|---|
| CODE | VALUE | | TC | BODY |
| P100 | $+100 \times 10^{-6}$/K | $MgTiO_3$, $Mg_2SiO_4$ | red-violet | grey |
| NP0 | $0 \times 10^{-6}$/K | $MgTiO_3$ | black | |
| N075 | $-75 \times 10^{-6}$/K | $BaNd_2(Bi_2)Ti_5O_x + TiO_2$ | red | |
| N150 | $-150 \times 10^{-6}$/K | $BaNd_2(Bi_2)Ti_5O_x + TiO_2$ | orange | |
| N220 | $-220 \times 10^{-6}$/K | $BaNd_2(Bi_2)Ti_5O_x + TiO_2$ | yellow | |
| N330 | $-330 \times 10^{-6}$/K | $BaNd_2(Bi_2)Ti_5O_x + TiO_2$ | green | |
| N470 | $-470 \times 10^{-6}$/K | $BaNd_2(Bi_2)Ti_5O_x + TiO_2$ | blue | |
| N750 | $-750 \times 10^{-6}$/K | $TiO_2$ + additions | violet | |
| N1500 | $-1500 \times 10^{-6}$/K | $CaTiO_3$ + additions | orange/orange | |

**Table 5** Class 2: $\varepsilon_r$ > 250; high-K types

| $\varepsilon_r$ VALUE | MATERIAL | COLOUR CODES | |
|---|---|---|---|
| | | TC | BODY |
| $\varepsilon_r$ = 2000 | $Ba(Bi)TiO_3$ | yellow | tan |
| $\varepsilon_r$ = 5000 | (Ba, Ca) (Ti, Zr) $O_3$ + additions | blue | |
| $\varepsilon_r$ = 14000 | (Ba, Ca) (Ti, Zr) $O_3$ + additions | green | |

## PACKAGING

The miniature ceramic plate capacitors are supplied in bulk packaging (cardboard boxes), in tape on reel or in ammopack (see Table 6).

**Table 6** Packaging quantities

| SIZE CODE | PACKAGING QUANTITIES | | |
|---|---|---|---|
| | BOX | REEL | AMMOPACK |
| I, IIA, IIB (excluding 1000 V) | 1000 | 4000 | 4000 |
| III, IV, V (with lead length ≤6 mm) (excluding 1000 V) | 1000 | – | – |
| III, IV, V (with lead length >6 mm) (excluding 1000 V) | 500 | 4000 | 4000 |
| III (500 V with lead length >6 mm) (excluding 1000 V) | 500 | 4000 | 4000 |
| IV, V (500 V with lead length >6 mm) (excluding 1000 V) | 500 | 4000 | 2000 |
| I, IIA, IIB, III, IV, V (1000 V with lead length >6 mm) | 500 | 2000 | 2000 |
| I, IIA, IIB, III, IV (1000 V with lead length ≤6 mm) | 1000 | – | – |
| V (1000 V with lead length ≤6 mm) | 500 | – | – |

### CAPACITORS ON TAPE, LEAD PITCH 5.08 mm (0.2 inch)

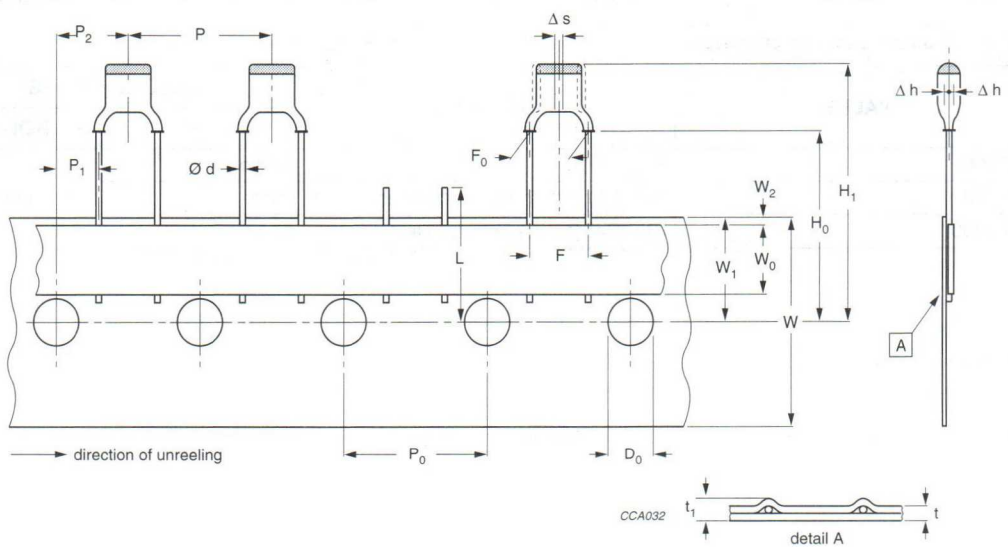


For dimensions see Table 7.

Fig.3 Capacitors, lead pitch 5.08 mm, on tape.

**Table 7** Dimensions of tape; see Fig.3

| SYMBOL | PARAMETER | DIMENSIONS (mm) | |
|---|---|---|---|
| | | NOMINAL | TOLERANCE |
| d | lead diameter | 0.6 | +0.6<br>−0.05 |
| P | pitch between capacitors | 12.7 | ±1.0 |
| $P_0$ | feed-hole pitch | 12.7 | ±0.2; note 1 |
| $P_1$ | feed-hole centre to lead centre | 3.85 | ±0.5; note 2 |
| $P_2$ | feed-hole centre to component centre | 6.35 | ±0.7; note 2 |
| F | lead-to-lead | 5.0 | +0.6<br>−0.1 |
| $F_0$ | lead-to-lead | 5.08 | +0.5<br>−0.1 |
| $\Delta h$ | component alignment | 0 | ±1.0 |
| $\Delta s$ | deviation along tape, left or right | 0 | ±0.6 |
| W | tape width | 18.0 | ±0.5 |
| $W_0$ | hold-down tape width | 6.0 | ±0.5 |
| $W_1$ | hole position | 9.0 | ±0.5 |
| $W_2$ | hold-down tape position | 0 | ±2 |
| $H_0$ | flange to tape centre | 18.25 (16.0); note 3 | ±0.5 |
| $H_1$ | maximum component height | 31 (28.75); note 4 | – |
| | minimum component height | 22 (18.75); note 4 | – |
| L | maximum length of snipped lead | 11 | – |
| $D_0$ | feed-hole diameter | 4.0 | ±0.2 |
| t | total tape thickness | 0.65 | ±0.2 |
| $t_1$ | maximum thickness of tape and wires | 1.5 | – |

**Notes**

1. Cumulative pitch error: $\pm \leq 1$ mm/20 pitches.
2. Obliquity maximum 3°.
3. $H_0$ = 16 mm also available.
4. Values between parentheses are referred to component height when $H_0$ = 16 mm.

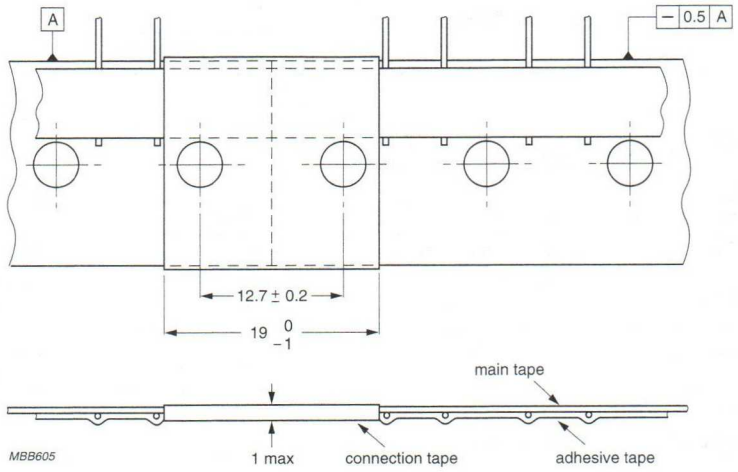


Dimensions in mm.

Maximum 0.5% of the total number of capacitors per reel may be missing. A maximum of 3 consecutive vacant positions is followed by at least 6 consecutive components. The tape begins and ends with 5 empty positions.

Fig.4 Connection of tapes, lead pitch 5.08 mm.

**Table 8** Properties of the tape

| PARAMETER | MIN. | MAX. | UNIT |
|---|---|---|---|
| Extraction force for component in the tape plane, vertically to direction of unreeling | 5 | – | N |
| Break force of tape | 15 | – | N |
| Pull-off force adhesive tape from main tape | – | 2.5 | N |

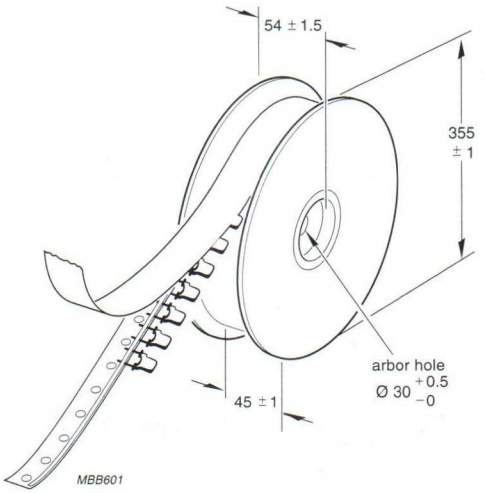


Dimensions in mm.

Fig.5 Reel with capacitors on tape.

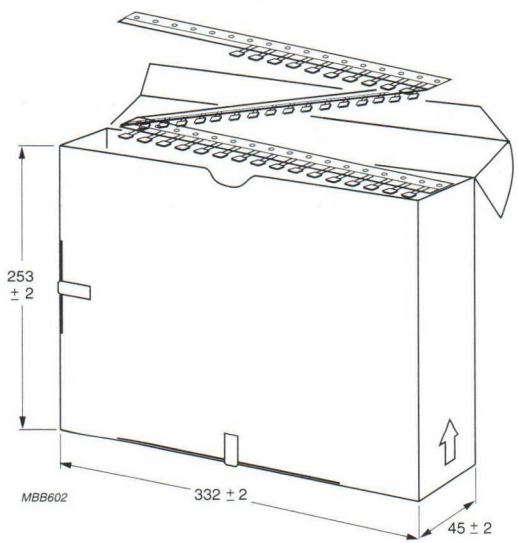


Dimensions in mm.

Fig.6 Ammopack with capacitors on tape.

**CAPACITORS ON TAPE, LEAD PITCH 2.54 mm (0.1 inch)**

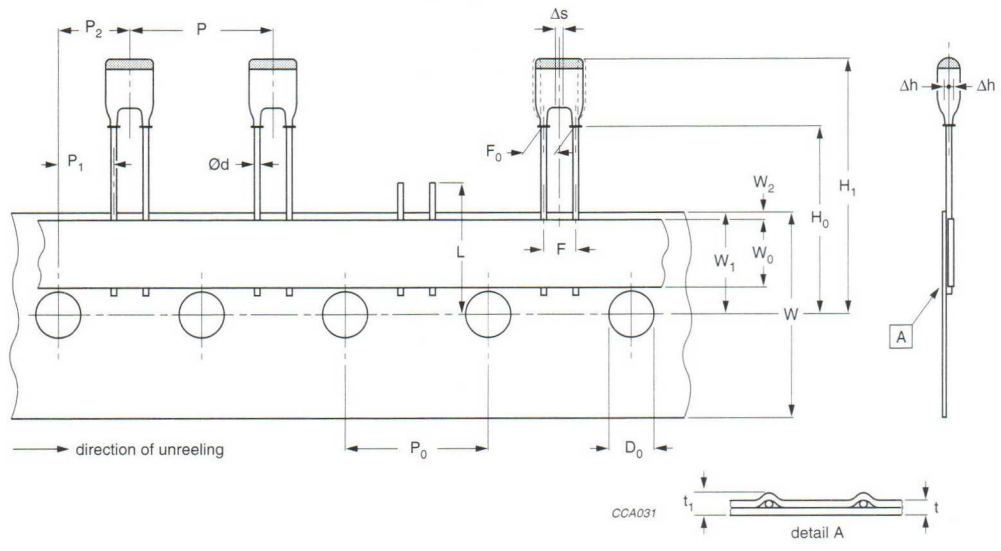


For dimensions see Table 9.

Fig.7 Capacitors, lead pitch 2.54 mm, on tape.

**Table 9** Dimensions of tape; see Fig.7

| SYMBOL | PARAMETER | DIMENSIONS (mm) | |
|---|---|---|---|
| | | NOMINAL | TOLERANCE |
| d | lead diameter | 0.6 | +0.6<br>−0.05 |
| P | pitch between capacitors | 12.7 | ±1.0 |
| $P_0$ | feed-hole pitch | 12.7 | ±0.2; note 1 |
| $P_1$ | feed-hole centre to lead centre | 5.1 | ±0.5; note 2 |
| $P_2$ | feed-hole centre to component centre | 6.35 | ±0.7; note 2 |
| F | lead-to-lead | 2.54 | ±0.3 |
| $F_0$ | lead-to-lead | 2.54 | ±0.3 |
| $\Delta h$ | component alignment | 0 | ±1.0 |
| $\Delta s$ | deviation along tape, left or right | 0 | ±0.6 |
| W | tape width | 18.0 | ±0.5 |
| $W_0$ | hold-down tape width | 6.0 | ±0.5 |
| $W_1$ | hole position | 9.0 | ±0.5 |
| $W_2$ | hold-down tape position | 0 | ±2 |
| $H_0$ | flange to tape centre | 18.25 (16.0); note 3 | ±0.5 |
| $H_1$ | maximum component height | 30 (27.75); note 4 | – |
| | minimum component height | 21 (18.75); note 4 | – |
| L | maximum length of snipped lead | 11 | – |
| $D_0$ | feed-hole diameter | 4.0 | ±0.2 |
| t | total tape thickness | 0.65 | ±0.2 |
| $t_1$ | maximum thickness of tape and wires | 1.5 | – |

**Notes**

1. Cumulative pitch error: ±≤1 mm/20 pitches.
2. Obliquity maximum 3°.
3. $H_0$ = 16 mm also available.
4. Values between parentheses are referred to component height when $H_0$ = 16 mm.

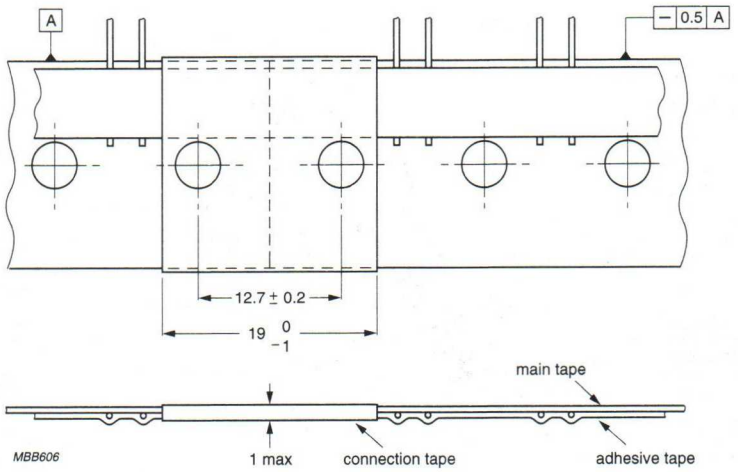


Dimensions in mm.

Maximum 0.5% of the total number of capacitors per reel may be missing. A maximum of 3 consecutive vacant positions is followed by at least 6 consecutive components. The tape begins and ends with 5 empty positions.

Fig.8 Connection of tapes, lead pitch 2.54 mm.

**Table 10** Properties of the tape

| PARAMETER | MIN. | MAX. | UNIT |
|---|---|---|---|
| Extraction force for component in the tape plane, vertically to direction of unreeling | 5 | – | N |
| Break force of tape | 15 | – | N |
| Pull-off force adhesive tape from main tape | – | 2.5 | N |

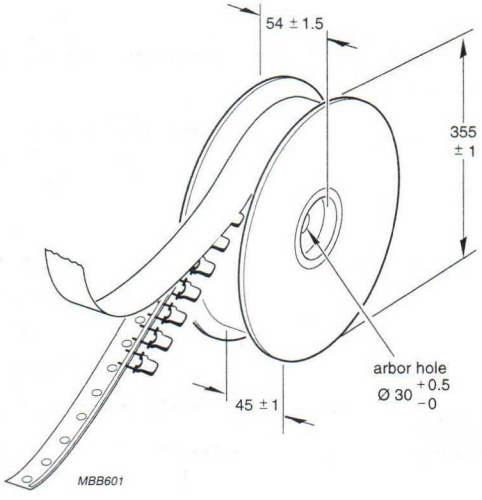


Dimensions in mm.

Fig.9 Reel with capacitors on tape.

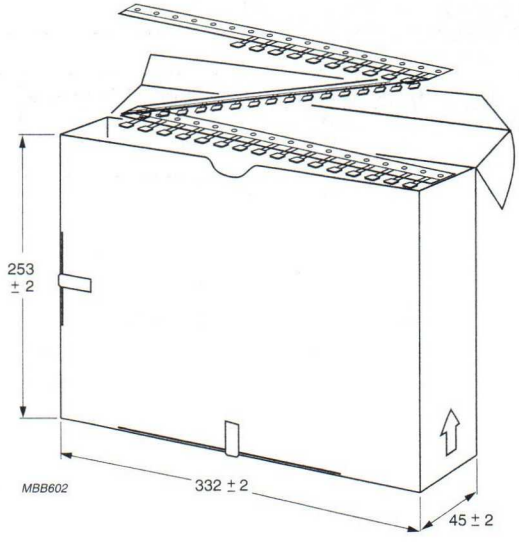


Dimensions in mm.

Fig.10 Ammopack with capacitors on tape.

## LABELLING

The label on the package containing the capacitors is as shown.




| LINE | MARKING EXPLANATION |
|---|---|
| 1. | Country of origin |
| 2. | Capacitance value, tolerance, dielectric class (note 1), rated voltage, lead spacing and lead length (note 2) |
| 3. | Country of origin and responsible production centre codes; A520 is Italy |
| 4. | Quantity and date code |
| 5. | Commercial type number |
| 6. | Catalogue number (12NC) |

**Notes**

1. Temperature coefficient for Class 1 capacitors; temperature characteristics for Class 2 capacitors.
2. Lead length is not shown on taped versions.

Fig.11 Packaging label (example).

## TESTS AND REQUIREMENTS

### Class 1 capacitors

After manufacture, each capacitor is checked on capacitance, tan δ and test voltage. Apart from this the following quality checks are carried out by frequent inspections.

Essentially all tests mentioned in the schedule of *"IEC publication 384-8"*, category as specified for each product family are carried out in accordance with *"IEC publication 68"*.

**Table 11** Test procedures and requirements

| IEC 384-8 CLAUSE | IEC 68-2 TEST METHOD | TEST | PROCEDURE | REQUIREMENTS |
|---|---|---|---|---|
| 4.4 | | robustness of terminations: | | |
| | | pull-off | pull velocity 15 cm/minute; load 5 N | no lead breakage |
| | $Ua_1$ | tensile strength | axial force 10 N | no lead breakage |
| | Ub | bending | load 5 N; 4 × 90° | no lead breakage |
| 4.6 | Ta method 1 | solderability (solder bath) | 235 °C; 2 s | good tinning |
| 4.5 | Tb method 1A | resistance to soldering heat | 260 °C; 10 s | no visible damage<br>ΔC/C: ±≤0.5% or ±0.5 pF after 1 to 2 hours |
| 4.7 | Na | rapid change of temperature | 30 minutes at −55 °C and 30 minutes at +85 °C; 5 cycles (+125 °C for P100, NP0 and N1500 with $U_{R(DC)}$ = 100 V; +150 °C for 2222 694, P100, NP0 and N1500 with $U_{R(DC)}$ = 500 V) | no damage, after 24 hours<br>ΔC/C: ±≤0.5% or ±0.5 pF |
| 4.8 | Fc | vibration | 10 to 55 to 10 Hz; 0.75 mm displacement; 3 directions; 6 hours | no visible damage |
| 4.9 | Eb | bump | 4000 bumps in 2 directions; 40 g; pulse time 6 ms | no visible damage |
| | | inflammability | 15 s; 35 mm above bunsen burner with flame height 40 to 60 mm | self-extinguishing within 15 seconds after removal of bunsen burner |
| 4.3 | | temperature coefficient | between +20 and −55 °C and between +20 and +85 °C | within tolerance as specified for each particular material |

| IEC 384-8 CLAUSE | IEC 68-2 TEST METHOD | TEST | PROCEDURE | REQUIREMENTS |
|---|---|---|---|---|
| 4.11 | | climatic sequence: | | |
| 4.11.2 | B | dry heat | 16 hours; +85 °C<br>(+125 °C for P100, NP0 and N1500 with $U_{R(DC)}$ = 100 V;<br>+150 °C for 2222 694, P100, NP0 and N1500 with $U_{R(DC)}$ = 500 V) | no visible damage |
| 4.11.3 | Db | damp heat (accelerated) 1st cycle | 12 hours; +55 °C; 90 to 96% RH<br>12 hours; +25 °C; 95 to 100% RH | no visible damage;<br>after recovery of 1 to 2 hours immediately followed by cold test |
| 4.11.4 | A | cold | 2 hours; −55 °C | no visible damage |
| 4.11.5 | M | low air pressure | 1 hour; 8.5 kPa,<br>last 2 minutes rated voltage | no breakdown or flashover |
| 4.11.6 | Db | damp heat (accelerated) remaining cycle | 12 hours; +55 °C; 90 to 96% RH<br>12 hours; +25 °C; 95 to 100% RH | $\Delta C/C$: ±≤1% or ±1 pF<br>tan δ: ≤2 × specified tan δ<br>$R_{ins}$ after 1 to 2 hours:<br>>5000 MΩ for 2222 650 to 654/691/692/694<br>>100 MΩ for other types |
| 4.12 | Ca | damp heat, steady state (half number of the lot at rated voltage, other half at zero voltage) | 21 days; +40 °C; 90 to 95% RH | $\Delta C/C$: ±≤1% or ±1 pF<br>tan δ: ≤2 × specified tan δ<br>$R_{ins}$ after 1 to 2 hours:<br>>5000 MΩ for 2222 650 to 654/691/692/694<br>>100 MΩ for other types |
| 4.13 | | endurance | 1000 hours at +85 °C<br>(+125 °C for P100, NP0 and N1500 with $U_{R(DC)}$ = 100 V;<br>+150 °C for 2222 694, P100, NP0 and N1500 with $U_{R(DC)}$ = 500 V);<br>2222 694: 1500 V (DC)<br>2222 650 to 654/691/692: 750 V (DC)<br>other types: 150 V (DC) | $\Delta C/C$: ±≤1% or ±1 pF<br>tan δ: ≤1.5 × specified tan δ<br>$R_{ins}$ after 1 to 2 hours:<br>>3000 MΩ for 2222 650 to 654/691/692/694<br>>300 MΩ for other types |
| | | resistance to solvents | 3 minutes ultrasonic washing in trichloroethylene; 1 minute drying; 30 °C; 10 brush strokes | marking and colour code must remain legible and not be discoloured; no mechanical or electrical damage or deterioration of the material |

### Class 1 precision capacitors NP0

After manufacture, each capacitor is checked on capacitance, tan δ and test voltage. Apart from this the following quality checks are carried out by frequent inspections.

Essentially all tests mentioned in the schedule of *"IEC publication 384-8"*, category 55/125/56 (temperature range –55/+125 °C; damp heat, long term, 56 days) are carried out in accordance with *"IEC publication 68"*.

**Table 12** Test procedures and requirements

| IEC 384-8 CLAUSE | IEC 68-2 TEST METHOD | TEST | PROCEDURE | REQUIREMENTS |
|---|---|---|---|---|
| 4.4 | | robustness of terminations: | | |
| | | pull-off | pull velocity 15 cm/minute; load 5 N | no lead breakage |
| | $Ua_1$ | tensile strength | axial force 10 N | no lead breakage |
| | Ub | bending | load 5 N; 4 × 90° | no lead breakage |
| 4.6 | Ta method 1 | solderability (solder bath) | 235 °C; 2 s | good tinning |
| 4.5 | Tb method 1A | resistance to soldering heat | 260 °C; 10 s | no visible damage<br>ΔC/C after 1 to 2 hours: ±≤0.5% or ±0.5 pF |
| 4.7 | Na | rapid change of temperature | 30 minutes at –55 °C and 30 minutes at +150 °C; 5 cycles | no damage<br>ΔC/C after 24 hours: ±≤0.5% or ±0.5 pF |
| 4.8 | Fc | vibration | 10 to 55 to 10 Hz; 0.75 mm displacement; 3 directions; 6 hours | no visible damage |
| 4.9 | Eb | bump | 4000 bumps in 2 directions; 40 g; pulse time 6 ms | no visible damage |
| | | inflammability | 15 s; 35 mm above bunsen burner with flame height 40 to 60 mm | self-extinguishing within 15 seconds after removal of bunsen burner |
| 4.3 | | temperature coefficient | between +20 and –55 °C and between +20 and +125 °C | within tolerance as specified |

| IEC 384-8 CLAUSE | IEC 68-2 TEST METHOD | TEST | PROCEDURE | REQUIREMENTS |
|---|---|---|---|---|
| 4.11 | | climatic sequence: | | |
| 4.11.2 | B | dry heat | 16 hours; +150 °C | no visible damage |
| 4.11.3 | Db | damp heat (accelerated) 1st cycle | 12 hours; +55 °C; 90 to 96% RH<br>12 hours; +25 °C; 95 to 100% RH | no visible damage;<br>after recovery of 1 to 2 hours immediately followed by cold test |
| 4.11.4 | A | cold | 2 hours; −55 °C | no visible damage |
| 4.11.5 | M | low air pressure | 1 hour; 8.5 kPa,<br>last 2 minutes rated voltage | no breakdown or flashover |
| 4.11.6 | Db | damp heat (accelerated) remaining cycle | 12 hours; +55 °C; 90 to 96% RH<br>12 hours; +25 °C; 95 to 100% RH | $\Delta C/C$: $\pm \leq 1\%$ or $\pm 1$ pF whichever is greater<br>tan $\delta$: $\leq 2 \times$ specified tan $\delta$<br>$R_{ins}$ after 1 to 2 hours: >1000 MΩ |
| 4.12 | Ca | damp heat, steady state (half number of the lot at rated voltage, other half at zero voltage) | 56 days; +40 °C; 90 to 95% RH | $\Delta C/C$: $\pm \leq 1\%$ or $\pm 1$ pF whichever is greater<br>tan $\delta$: $\leq 2 \times$ specified tan $\delta$<br>$R_{ins}$ after 1 to 2 hours: >1000 MΩ |
| 4.13 | | endurance | 1 000 hours at +150 °C, $1.5 \times$ rated voltage; (+125 °C for P100, NP0 and N1500 with $U_{R(DC)}$ = 100 V;<br>+150 °C for 2222 694, P100, NP0 and N1500 with $U_{R(DC)}$ = 500 V) | $\Delta C/C$: $\pm \leq 1\%$ or $\pm 1$ pF whichever is greater<br>tan $\delta$: $\leq 1.5 \times$ specified tan $\delta$<br>$R_{ins}$: >3000 MΩ |
| | | resistance to solvents | 3 minutes ultrasonic washing in trichloroethylene;<br>1 minute drying; 30 °C;<br>10 brush strokes | marking and colour code must remain legible and not be discoloured; no mechanical or electrical damage or deterioration of the material |

### Class 2 capacitors

After manufacture, each capacitor is checked on capacitance, tan δ and test voltage. Apart from this the following quality checks are carried out by frequent inspections.

Essentially all tests mentioned in the schedule of *"IEC publication 384-9"*, category as specified for each product family, are carried out in accordance with *"IEC publication 68"*.

**Table 13** Test procedures and requirements

| IEC 384-9 CLAUSE | IEC 68-2 TEST METHOD | TEST | PROCEDURE | REQUIREMENTS |
|---|---|---|---|---|
| 4.1 | | pre-conditioning | 1 hour; +150 °C; reference measurement after 24 hours | |
| 4.5 | | robustness of terminations: | | |
| | | pull-off | pull velocity 15 cm/minute; load 5 N | no lead breakage |
| | $Ua_1$ | tensile strength | axial force 10 N | no lead breakage |
| | Ub | bending | load 5 N; 4 × 90° | no lead breakage |
| 4.7 | Ta method 1 | solderability (solder bath) | 235 °C; 2 s | good tinning |
| 4.6 | Tb method 1A | resistance to soldering heat | pre-conditioning: 260 °C; 10 s | no visible damage<br>ΔC/C after 24 hours:<br>2222 630: ±≤10%<br>2222 629/640/695: ±≤20%<br>2222 655/693: ±10% |
| 4.8 | Na | rapid change of temperature | pre-conditioning:<br>2222 630/655/693/695:<br>30 minutes at −55 °C and<br>30 minutes at +85 °C<br>(+125 °C for 630;<br>+105 °C for 640/695;<br>+150 °C for 655/693);<br>2222 629:<br>30 minutes at −10 °C and<br>30 minutes at +85 °C; 5 cycles | no damage<br>ΔC/C after 24 hours:<br>2222 630/655/693: ±≤10%<br>2222 629/640/695: ±≤20% |
| 4.9 | Fb | vibration | 10 to 55 to 10 Hz;<br>0.75 mm displacement;<br>3 directions; 6 hours | no visible damage |
| 4.10 | Eb | bump | 4000 bumps in 2 directions; 40 g; pulse time 6 ms | no visible damage |
| | | inflammability | 15 s; 35 mm above bunsen burner with flame height 40 to 60 mm | self-extinguishing within 15 s after removal of bunsen burner |
| | | resistance to solvents | 3 minutes ultrasonic washing in trichloroethylene; 1 minute drying, 30 °C; 10 brush strokes | marking and colour code must remain legible and not be discoloured; no mechanical or electrical damage or deterioration of the material |

| IEC 384-9 CLAUSE | IEC 68-2 TEST METHOD | TEST | PROCEDURE | REQUIREMENTS |
|---|---|---|---|---|
| 4.12 | | climatic sequence: | | |
| 4.12.1 | | pre-conditioning | 1 hour; +150 °C | |
| 4.12.2 | Ba | dry heat | 16 hours at:<br>+85 °C for 2222 629;<br>+105 °C for 2222 640/695;<br>+125 °C for 2222 630;<br>+150 °C for 2222 655/693 | no visible damage |
| 4.12.3 | Db | damp heat (accelerated) 1st cycle | 12 hours; +55 °C; 90 to 96% RH<br>12 hours; +25 °C; 95 to 100% RH | no visible damage;<br>after recovery of 1 to 2 hours immediately followed by cold test |
| 4.12.4 | Aa | cold | 2222 630/640/655/693/695:<br>2 hours; −55 °C;<br>2222 629: 2 hours; −10 °C | no visible damage |
| 4.12.5 | M | low air pressure | 1 hour at 8.5 kPa,<br>last 2 minutes rated voltage | no breakdown or flashover |
| 4.12.6 | Db | damp heat (accelerated) remaining cycle | 12 hours; +55 °C; 90 to 96% RH<br>12 hours; +25 °C; 95 to 100% RH | ΔC/C after 24 hours:<br>2222 630/655/693: ±≤10%<br>2222 629/640/695: ±≤20%<br>tan δ: ≤7% (2222 695: <2%)<br>$R_{ins}$:<br>2222 629/630/640: >100 MΩ<br>2222 655/693/695: >1000 MΩ |
| 4.13 | Ca | damp heat, steady state (half number of samples at rated voltage, other half of samples no voltage applied) | pre-conditioning:<br>2222 629/640: 21 days;<br>+40 °C; 90 to 95% RH;<br>2222 630/655/693/695: 56 days;<br>+40 °C; 90 to 95% RH | no visible damage<br>ΔC/C after 24 hours:<br>2222 630/655/693: ±≤10%<br>2222 629/640/695: ±≤20%<br>tan δ: ≤7% (2222 695: <2%)<br>$R_{ins}$:<br>2222 629/630/640: >100 MΩ<br>2222 655/693/695: >1000 MΩ |
| 4.14 | | endurance | pre-conditioning: 1000 hours (IEC)<br>pre-conditioning:<br>2222 630: +125 °C; 150 V (DC)<br>2222 640: +105 °C; 150 V (DC<br>2222 629: +85 °C; 100 V (DC)<br>2222 655: +150 °C; 750 V (DC)<br>2222 693: +150 °C; 1500 V (DC)<br>2222 695: +105 °C; 1500 V (DC) | ΔC/C after 24 hours:<br>2222 630/655/693: ±≤10%<br>2222 629/640/695: ±≤20%<br>tan δ: ≤5% (2222 629: ≤6.5%)<br>(2222 695: <2%)<br>$R_{ins}$:<br>2222 629/630/640: >300 MΩ<br>2222 655/693/695: >1000 MΩ |
| 4.4 | | temperature characteristic | pre-conditioning<br>minimum and maximum temperature | in accordance with specification |

# Miniature ceramic plate capacitors — Clear text code

## CLEAR TEXT ORDERING CODE

R 101 G 33 C0G H WG AP

**Product type**

R plate capacitor

**Capacitance (pF)**

The first two digits are the significant figures of capacitance and the last digit is a multiplier as follows:

| | |
|---|---|
| 0 | × 1 |
| 1 | × 10 |
| 2 | × 100 |
| 3 | × 1000 |
| 9 | × 0.1 |
| 8 | × 0.01 |

**Capacitance tolerance**

| | |
|---|---|
| B | ±0.1 pF (NP0 precision cap. < 10 pF) |
| C | ±0.25 pF (cap. < 10 pF) |
| G | ±2% (class 1 for cap. ≥ 10 pF) |
| F | ±1% (NP0 precision cap. ≥ 10 pF) |
| J | ±5% (class 1 for cap. ≥ 10 pF) |
| K | ±10% (class 2, Y5P) |
| M | ±20% (class 2, X5U) |
| Z | +80%/–20% (class 2, Z5V) |

**Size code**

| Size | $W_{max}$ | $H_{max}$ |
|---|---|---|
| 19 | 3.9 mm (0.152") | 6.7 mm (0.254") |
| 29 | 4.5 mm (0.177") | 7.3 mm (0.288") |
| 33 | 5.3 mm (0.208") | 8.1 mm (0.319") |
| 43 | 6.2 mm (0.244") | 9.0 mm (0.354") |
| 53 | 6.2 mm (0.244") | 11.2 mm (0.441") |

CCA945

**Class code**

| | |
|---|---|
| AP | class 1 |
| SP | class 2 |

**Packaging**

| Code | Space | Length | Form | Packaging |
|---|---|---|---|---|
| WC | 0.100" | 0.500" min. | flange | bulk |
| WD | 0.200" | 0.167 ±0.020" | flange | bulk |
| WE | 0.100" | 0.167 ±0.020" | flange | bulk |
| WF | 0.200" | 0.500" min. | flange | bulk |
| WG | 0.200" | $H_0$ = 18 mm | flange | tape on reel |
| WH | 0.100" | $H_0$ = 18 mm | flange | tape on reel |
| WJ | 0.200" | $H_0$ = 18 mm | flange | ammopack |
| WK | 0.100" | $H_0$ = 18 mm | flange | ammopack |

**Rated voltage (DC)**

| | |
|---|---|
| F | 50 V |
| H | 100 V |
| L | 500 V |
| N | 1000 V |

**EIA TC codes**

| Code | TC | | Marking |
|---|---|---|---|
| M7J | P100 ±30 ppm | class 1 | red/violet |
| C0G | NP0 ±30 ppm | class 1 | black |
| U1G | N075 ±30 ppm | class 1 | red |
| P2G | N150 ±30 ppm | class 1 | orange |
| R2G | N220 ±30 ppm | class 1 | yellow |
| R2H | N330 ±60 ppm | class 1 | green |
| T2H | N470 ±60 ppm | class 1 | blue |
| U2J | N750 ±120 ppm | class 1 | violet |
| P8K | N1500 +600/–0 ppm | class 1 | orange/orange |
| U2M | +150 to –1500 ppm | class 1 | nil |
| Y5P | ±10%; –30 to +85 °C | class 2 | yellow |
| X5U | +22/–58%; –55 to +85 °C | class 2 | blue |
| Z5V | +22/–82%; –10 to +85 °C | class 2 | green |

# PRODUCT DATA

# Miniature ceramic plate capacitors Precision capacitors NP0

## FEATURES

- High-frequency circuits
- High reliability
- High stability
- Space saving.

## APPLICATIONS

In a great variety of electronic circuits, e.g. in filters, tuning circuits and other professional applications where high stability, precision, reliability and low losses are a requirement. Because of their small size the capacitors are suitable for use in circuitry with high component density. The high reliability even in most demanding environmental conditions make the product suitable for automotive, telecommunications and other electronic circuits used at high temperatures.

## DESCRIPTION

The capacitors consist of a thin rectangular ceramic plate, both sides of which are metallized, and tinned connecting leads are secured using a high melting point solder. The capacitors are encapsulated in epoxy lacquer, which is resistant to all commonly used cleaning solvents. They have small dimensions and narrow tolerances on the lead spacing. The leads are provided with a flange, which guarantees that the leads are free of lacquer, and its shape allows soldering gasses to escape freely, ensuring excellent solderability. This makes the capacitors suitable for both hand-mounting and automatic insertion. The electrical properties are characterized by low losses, a very narrow tolerance on capacitance (±0.1 pF or 1%), high stability and, owing to the absence of silver, an extremely good DC behaviour.

## QUICK REFERENCE DATA

| DESCRIPTION | VALUE |
|---|---|
| Capacitance range (E24 series) | 1 pF to 240 pF |
| Rated DC voltage | 100 V; note 1 |
| Tolerance on capacitance | $C \leq 10$ pF: ±0.1 pF;<br>$C > 10$ pF: ±1% |
| Sectional specification | IEC 384-8 |
| Climatic category (IEC 68) | 55/150/56 |

**Note**

1. 500 V available on request.

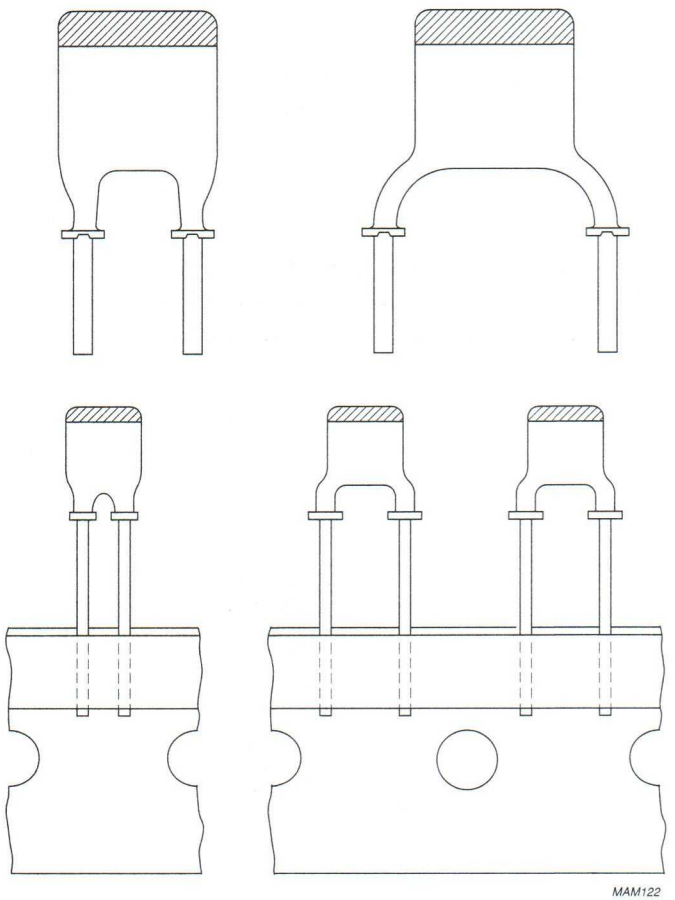


Fig.1 Outlines.

## MECHANICAL DATA

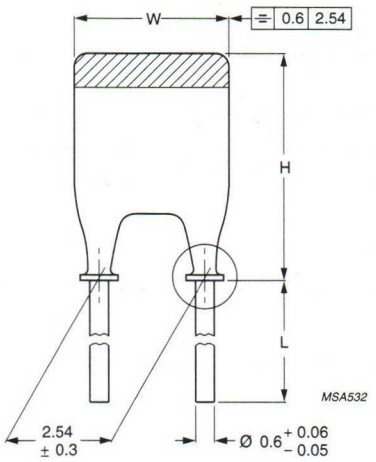


Dimensions in mm.
For dimensions H, L and W see Tables 1 and 2.

Fig.2 Component outline style 1.

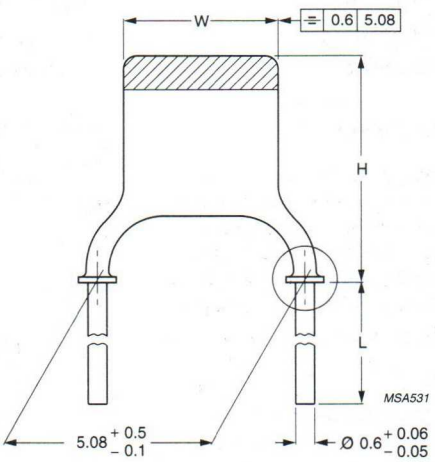


Dimensions in mm.
For dimensions H, L and W see Tables 1 and 2.

Fig.3 Component outline style 2.

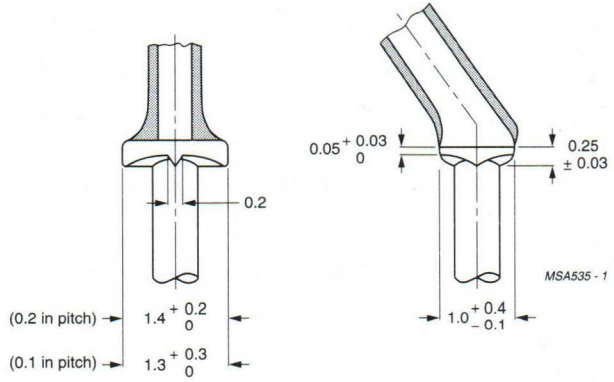


Dimensions in mm.

Fig.4 Detail of flange.

### Marking

The temperature coefficient is indicated by a colour code in accordance with IEC and EIA recommendations. Capacitance value is indicated by a marking code in a contrasting colour on the body. Refer to Table 4, for marking codes.

### Mounting

When bending, cutting or flattening, the leads should be relieved of the applied load by supporting them at the capacitor body.

Soldering conditions:

max. 265 °C, max. 10 s.

The capacitors are suitable for mounting on printed-circuit boards (hand-mounting or automatic insertion).

### Physical dimensions

**Table 1** Capacitor dimensions and mass

| SIZE[1] | W[2] (mm) | H[2] (mm) | | MASS (g) |
|---|---|---|---|---|
| | | STYLE 1 | STYLE 2 | |
| I | 3.6 (–1.1) | 5.0 (–1.5) | 6.3 (–1.8) | ≈0.14 |
| IIA | 3.9 (–1.4) | 5.3 (–1.7) | 6.7 (–2.0) | ≈0.15 |
| IIB | 4.5 (–1.8) | 6.0 (–2.1) | 7.3 (–2.4) | ≈0.15 |
| III | 5.3 (–1.8) | 6.8 (–2.3) | 8.1 (–2.6) | ≈0.17 |
| IV | 6.2 (–2.0) | 7.7 (–2.4) | 9.0 (–2.7) | ≈0.20 |
| V | 6.2 (–2.0) | 10.3 (–2.8) | 11.2 (–3.1) | ≈0.23 |

**Notes**

1. Unless indicated in Table 4, the thickness of the capacitors does not exceed 2.3 mm.
2. Tolerances are given between parentheses.

## PACKAGING

For details refer to this handbook, Chapter *"Miniature ceramic plate capacitors"*, Section *"General data"*.

## ORDERING INFORMATION

**Table 2** Catalogue numbers

| PITCH P | LEAD DIAMETER d | STYLE | CATALOGUE NUMBERS[1] | | | |
|---|---|---|---|---|---|---|
| | | | BULK PACKED | | ON TAPE[2] (REEL) | ON TAPE[2] (AMMOPACK) |
| | | | L ≥ 13 mm | L = 4 ±0.5 mm | | |
| 2.54 mm (0.1 inch) | 0.6 mm (0.024 inch) | 1 | 2222 680 ..... | 2222 682 ..... | 2222 678 ..... | 2222 688 ..... |
| 5.08 mm (0.2 inch) | 0.6 mm (0.024 inch) | 2 | 2222 681 ..... | 2222 683 ..... | 2222 679 ..... | 2222 689 ..... |

**Notes**

1. Catalogue numbers to be completed by adding the last 5 digits for required capacitance value, see Table 4.
2. $H_0$ = 18.25 mm.

**Table 3** Conditions for Table 4; precision capacitors with temperature coefficient NP0, rated voltage 100 V (DC)

| DESCRIPTION | VALUE |
|---|---|
| Capacitance range | 1 to 240 pF (E24 series) |
| Temperature coefficient of the capacitance $\left(\frac{\Delta C}{C \Delta T}\right)$ | $0 \times 10^{-6}$/K |
| Tolerance on the temperature coefficient | $\pm 30 \times 10^{-6}$/K |
| Marking colour of the temperature coefficient | black |

**Table 4** Precision capacitance range, temperature coefficient NP0

| CAPACITANCE VALUE[1] (pF) | TOLERANCE[1] | SIZE (see Table 1) | MARKING | SUFFIX OF CATALOGUE NUMBER (see Table 2) |
|---|---|---|---|---|
| 1.0 | ±0.1 pF | I[2] | 1p0 | 90108 |
| 1.1 | ±0.1 pF | I | 1p1 | 90118 |
| 1.2 | ±0.1 pF | I | 1p2 | 90128 |
| 1.3 | ±0.1 pF | I | 1p3 | 90138 |
| 1.5 | ±0.1 pF | I | 1p5 | 90158 |
| 1.6 | ±0.1 pF | I | 1p6 | 90168 |
| 1.8 | ±0.1 pF | I | 1p8 | 90188 |
| 2.0 | ±0.1 pF | I | 2p0 | 90208 |
| 2.2 | ±0.1 pF | I | 2p2 | 90228 |
| 2.4 | ±0.1 pF | I | 2p4 | 90248 |
| 2.7 | ±0.1 pF | I | 2p7 | 90278 |
| 3.0 | ±0.1 pF | I | 3p0 | 90308 |
| 3.3 | ±0.1 pF | I | 3p3 | 90338 |
| 3.6 | ±0.1 pF | I | 3p6 | 90368 |
| 3.9 | ±0.1 pF | I | 3p9 | 90398 |
| 4.3 | ±0.1 pF | I | 4p3 | 90438 |
| 4.7 | ±0.1 pF | I | 4p7 | 90478 |
| 5.1 | ±0.1 pF | I | 5p1 | 90518 |
| 5.6 | ±0.1 pF | I | 5p6 | 90568 |
| 6.2 | ±0.1 pF | I | 6p2 | 90628 |
| 6.8 | ±0.1 pF | I | 6p8 | 90688 |
| 7.5 | ±0.1 pF | I | 7p5 | 90758 |
| 8.2 | ±0.1 pF | I | 8p2 | 90828 |
| 10 | ±0.1 pF | I | 10p | 90109 |
| 11 | ±1% | I | 11p | 90119 |
| 12 | ±1% | I | 12p | 90129 |
| 13 | ±1% | I | 13p | 90139 |
| 15 | ±1% | I | 15p | 90159 |
| 16 | ±1% | I | 16p | 90169 |

# Miniature ceramic plate capacitors Precision capacitors NP0

| CAPACITANCE VALUE[1] (pF) | TOLERANCE[1] | SIZE (see Table 1) | MARKING | SUFFIX OF CATALOGUE NUMBER (see Table 2) |
|---|---|---|---|---|
| 18 | ±1% | I | 18p | 90189 |
| 20 | ±1% | I | 20p | 90209 |
| 22 | ±1% | I | 22p | 90229 |
| 24 | ±1% | I | 24p | 90249 |
| 27 | ±1% | I | 27p | 90279 |
| 30 | ±1% | I | 30p | 90309 |
| 33 | ±1% | I | 33p | 90339 |
| 36 | ±1% | IIA | 36p | 90369 |
| 39 | ±1% | IIA | 39p | 90399 |
| 43 | ±1% | IIA | 43p | 90439 |
| 47 | ±1% | IIA | 47p | 90479 |
| 51 | ±1% | IIA | 51p | 90519 |
| 56 | ±1% | IIA | 56p | 90569 |
| 62 | ±1% | IIB | 62p | 90629 |
| 68 | ±1% | IIB | 68p | 90689 |
| 75 | ±1% | IIB | 75p | 90759 |
| 82 | ±1% | IIB | 82p | 90829 |
| 100 | ±1% | III | n10 | 90101 |
| 110 | ±1% | III | n11 | 90111 |
| 120 | ±1% | III | n12 | 90121 |
| 130 | ±1% | IV | n13 | 90131 |
| 150 | ±1% | IV | n15 | 90151 |
| 160 | ±1% | IV | n16 | 90161 |
| 180 | ±1% | IV | n18 | 90181 |
| 200 | ±1% | V | n20 | 90201 |
| 220 | ±1% | V | n22 | 90221 |
| 240 | ±1% | V | n24 | 90241 |

**Notes**

1. Other capacitance values and tolerances are available on request.
2. Maximum thickness 2.5 mm.

## ELECTRICAL CHARACTERISTICS

The capacitors meet the essential requirements of *"IEC 384-8"*. Unless stated otherwise all electrical values apply at an ambient temperature of 20 ±1 °C, an atmospheric pressure of 86 to 106 kPa and a relative humidity of 63 to 67%.

| DESCRIPTION | VALUE |
|---|---|
| Capacitance values (note 1) measured at 1 MHz, ≤5 V | see Table 4 |
| Rated DC voltage | 100 V |
| DC test voltage; duration 1 minute | 300 V |
| DC test voltage of coating; duration 1 minute | 300 V |
| Insulation resistance at 100 V (DC) after 1 minute | ≥10000 MΩ |
| Tan δ (note 1) measured at 1 MHz, ≤5 V: | |
| $C \leq 50$ pF | $\leq 10\left(\frac{15}{C}+0.7\right)\times 10^{-4}$; $<20\times 10^{-4}$ |
| $C > 50$ pF | $\leq 10\times 10^{-4}$ |
| Category temperature range | −55 to +150 °C |
| Climatic category (IEC 68) | 55/150/56 |

**Note**

1. Including 2 mm per connecting lead.

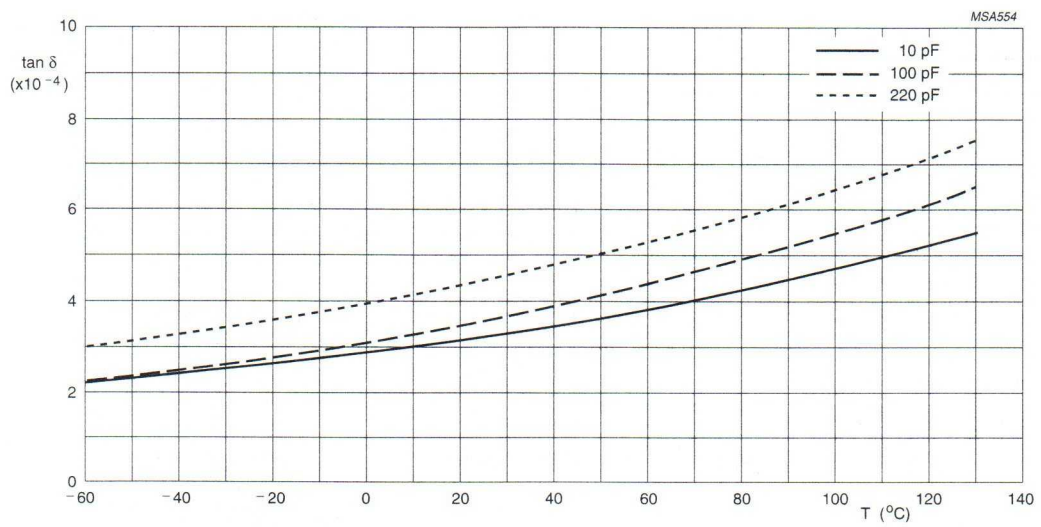


Fig.5 Typical tan δ as a function of temperature.

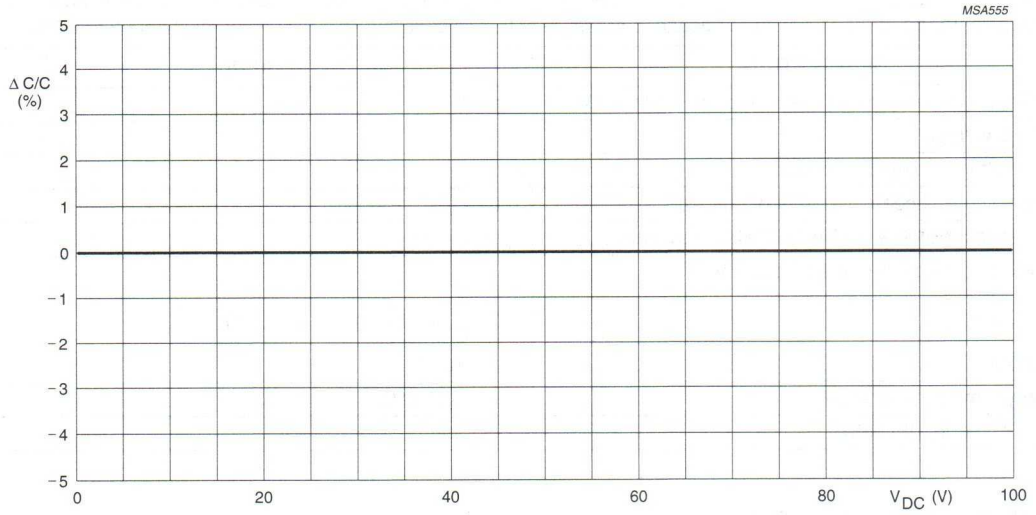


Reference values at 1 MHz.
Measurements made at 1 V, including 2 mm per connecting lead.

Fig.6 Typical capacitance change as function of DC voltage.

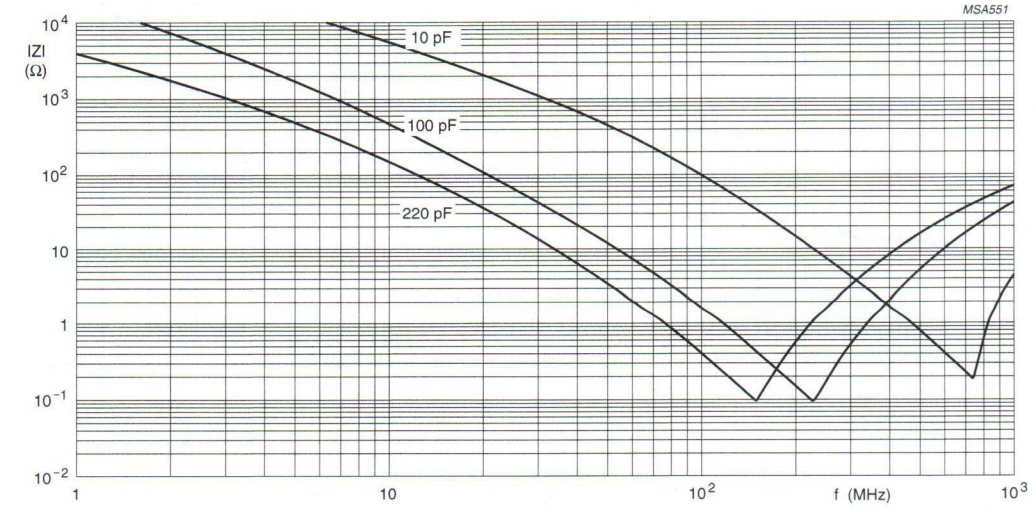


Fig.7 Typical impedance |Z| as a function of frequency.

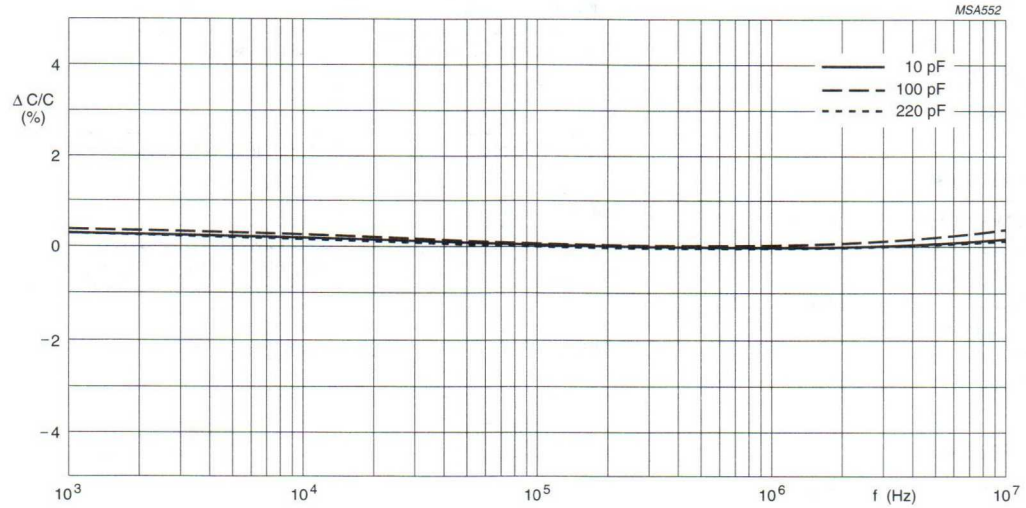


Reference values at 1 MHz.
Measurements made at 1 V, including 2 mm per connecting lead.

Fig.8 Typical capacitance change as function of frequency.

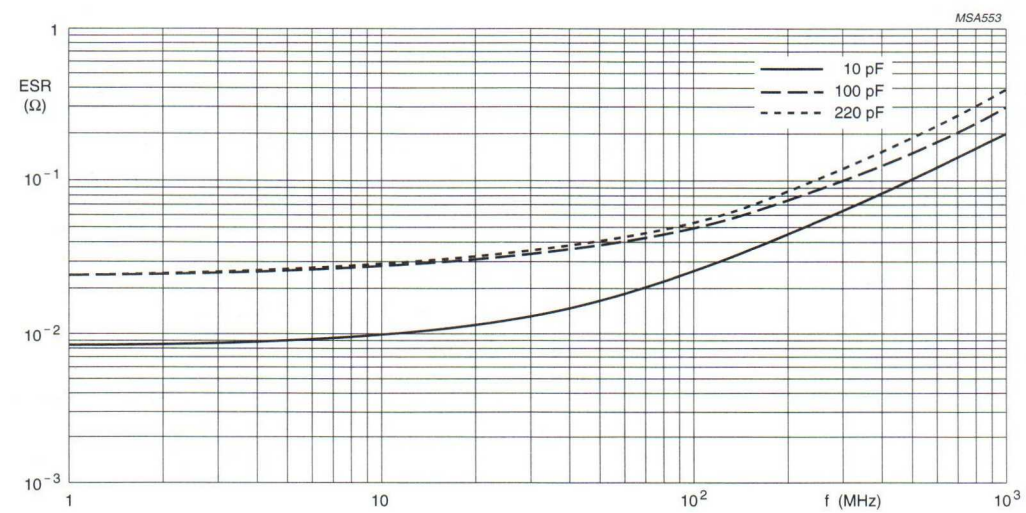


Fig.9 Equivalent series resistance (ESR) as a function of frequency.

# Miniature ceramic plate capacitors

# Class 1, 100 V (DC) (flanged types)

## FEATURES

- High-frequency circuits
- Temperature compensating
- High stability
- Space saving.

## APPLICATIONS

In a great variety of electronic circuits, e.g. in filters and tuning circuits where high stability and/or temperature compensation are a requirement. Because of their small size the capacitors are suitable for use in circuitry with high component density.

## DESCRIPTION

The capacitors consist of a thin rectangular ceramic plate, both sides of which are metallized, and tinned connecting leads are secured using a high melting point solder. The capacitors are encapsulated in epoxy lacquer, which is resistant to all commonly used cleaning solvents. They have small dimensions and narrow tolerances on the lead spacing. The leads are provided with a flange, which guarantees that the leads are free of lacquer, and its shape allows soldering gasses to escape freely, ensuring excellent solderability. This makes the capacitors suitable for both hand-mounting and automatic insertion. The electrical properties are characterized by low losses, a narrow tolerance on capacitance (±0.25 pF or 2%), high stability and, owing to the absence of silver, an extremely good DC behaviour.

## QUICK REFERENCE DATA

| DESCRIPTION | VALUE |
|---|---|
| Capacitance range (E12 series) | 0.56 to 560 pF |
| Rated DC voltage | 100 V |
| Tolerance on capacitance | ±2% or ±0.25 pF |
| Temperature coefficients | P100, NP0, N150, N750 and N1500; note 1 |
| Sectional specification | IEC 384-8 |
| Climatic category (IEC 68) | 55/085/21 (N150, N750); 55/125/56 (P100, NP0, N1500) |

**Note**

1. N075, N220, N330, N470 available on request.

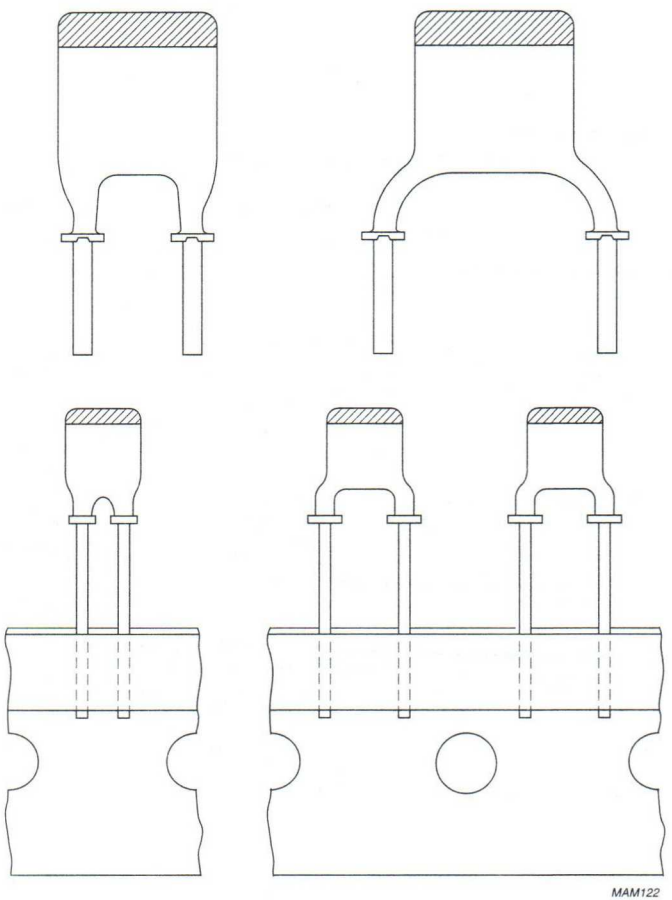


Fig.1 Outlines.

## MECHANICAL DATA

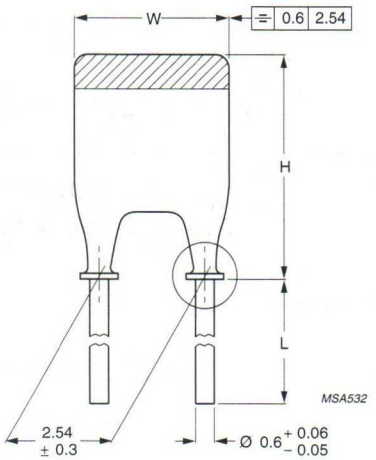


Dimensions in mm.
For dimensions H, L and W see Tables 1 and 2.

Fig.2 Component outline style 1.

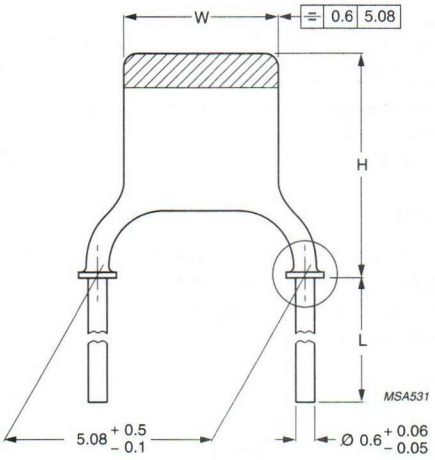


Dimensions in mm.
For dimensions H, L and W see Tables 1 and 2.

Fig.3 Component outline style 2.

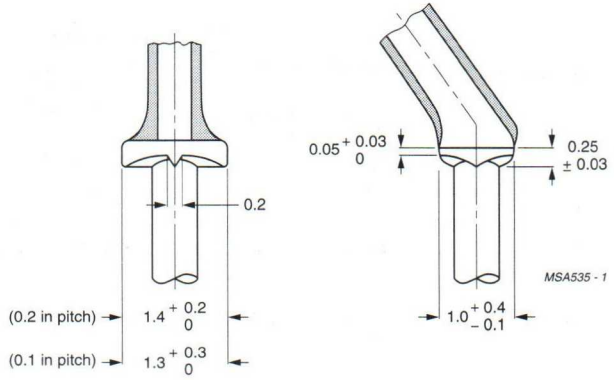


Dimensions in mm.

Fig.4 Detail of flange.

### Marking

The temperature coefficient is indicated by a colour code in accordance with IEC and EIA recommendations. Capacitance value is indicated by a marking code in a contrasting colour on the body. Refer to Tables 3 to 12, for colour and marking codes.

### Mounting

When bending, cutting or flattening, the leads should be relieved of the applied load by supporting them at the capacitor body.

Soldering conditions:

max. 265 °C, max. 10 s.

The capacitors are suitable for mounting on printed-circuit boards (hand-mounting or automatic insertion).

### Physical dimensions

**Table 1** Capacitor dimensions and mass

| SIZE[1] | W[2] (mm) | H[2] (mm) | | MASS (g) |
|---|---|---|---|---|
| | | STYLE 1 | STYLE 2 | |
| I | 3.6 (–1.1) | 5.0 (–1.5) | 6.3 (–1.8) | ≈0.14 |
| IIA | 3.9 (–1.4) | 5.3 (–1.7) | 6.7 (–2.0) | ≈0.15 |
| IIB | 4.5 (–1.8) | 6.0 (–2.1) | 7.3 (–2.4) | ≈0.15 |
| III | 5.3 (–1.8) | 6.8 (–2.3) | 8.1 (–2.6) | ≈0.17 |
| IV | 6.2 (–2.0) | 7.7 (–2.4) | 9.0 (–2.7) | ≈0.20 |
| V | 6.2 (–2.0) | 10.3 (–2.8) | 11.2 (–3.1) | ≈0.23 |

**Notes**

1. Unless indicated in Tables 4 to 12, the thickness of the capacitors does not exceed 2.3 mm.
2. Tolerances are given between parentheses.

## PACKAGING

For details refer to this handbook, Chapter *"Miniature ceramic plate capacitors"*, Section *"General data"*.

## ORDERING INFORMATION

**Table 2** Catalogue numbers

| PITCH P | LEAD DIAMETER d | STYLE | CATALOGUE NUMBERS[1] | | | |
|---|---|---|---|---|---|---|
| | | | BULK PACKED | | ON TAPE[2] (REEL) | ON TAPE[2] (AMMOPACK) |
| | | | L ≥ 13 mm | L = 4 ±0.5 mm | | |
| 2.54 mm (0.1 inch) | 0.6 mm (0.024 inch) | 1 | 2222 680 ..... | 2222 682 ..... | 2222 678 ..... | 2222 688 ..... |
| 5.08 mm (0.2 inch) | 0.6 mm (0.024 inch) | 2 | 2222 681 ..... | 2222 683 ..... | 2222 679 ..... | 2222 689 ..... |

**Notes**

1. Catalogue numbers to be completed by adding the last 5-digit suffix for required capacitance value, see Tables 4 to 12.
2. $H_0$ = 18.25 mm.

**Table 3** Conditions for Table 4; capacitors with temperature coefficient **P100 (M7G)**, rated voltage 100 V (DC)

| DESCRIPTION | VALUE |
|---|---|
| Capacitance range | 0.56 to 47 pF (E12 series) |
| Temperature coefficient of the capacitance $\left(\frac{\Delta C}{C \Delta T}\right)$ | $100 \times 10^{-6}$/K |
| Tolerance on the temperature coefficient | $\pm 30 \times 10^{-6}$/K |
| Marking colour of the temperature coefficient | red/violet |
| Climatic category (IEC 68) | 55/125/56 |

**Table 4** **Preferred** capacitance range, temperature coefficient **P100 (M7G)**

| CAPACITANCE VALUE[1] (pF) | TOLERANCE | SIZE (see Table 1) | MARKING | SUFFIX OF CATALOGUE NUMBER (see Table 2) |
|---|---|---|---|---|
| 0.56 | ±0.25 pF | I[2] | p56 | 03567 |
| 0.68 | ±0.25 pF | I[2] | p68 | 03687 |
| 0.82 | ±0.25 pF | I[2] | p82 | 03827 |
| 1.0 | ±0.25 pF | I[3] | 1p0 | 03108 |
| 1.2 | ±0.25 pF | I | 1p2 | 03128 |
| 1.5 | ±0.25 pF | I | 1p5 | 03158 |
| 1.8 | ±0.25 pF | I | 1p8 | 03188 |
| 2.2 | ±0.25 pF | I | 2p2 | 03228 |
| 2.7 | ±0.25 pF | I | 2p7 | 03278 |
| 3.3 | ±0.25 pF | I | 3p3 | 03338 |
| 3.9 | ±0.25 pF | I | 3p9 | 03398 |
| 4.7 | ±0.25 pF | I | 4p7 | 03478 |
| 5.6 | ±0.25 pF | I | 5p6 | 03568 |
| 6.8 | ±0.25 pF | I | 6p8 | 03688 |
| 8.2 | ±0.25 pF | IIA | 8p2 | 03828 |
| 10 | ±2% | IIA | 10p | 04109 |
| 12 | ±2% | IIB | 12p | 04129 |
| 15 | ±2% | IIB | 15p | 04159 |
| 18 | ±2% | III | 18p | 04189 |
| 22 | ±2% | III | 22p | 04229 |
| 27 | ±2% | IV | 27p | 04279 |
| 33 | ±2% | IV | 33p | 04339 |
| 39 | ±2% | V | 39p | 04399 |
| 47 | ±2% | V | 47p | 04479 |

**Notes**

1. Other capacitance values and tolerances are available on request.
2. Maximum thickness 2.7 mm.
3. Maximum thickness 2.5 mm.

**Table 5** Conditions for Table 6; capacitors with temperature coefficient **NP0 (C0G)**, rated voltage 100 V (DC)

| DESCRIPTION | VALUE |
|---|---|
| Capacitance range | 1.8 to 220 pF (E12 series) |
| Temperature coefficient of the capacitance $\left(\frac{\Delta C}{C \Delta T}\right)$ | $0 \times 10^{-6}$/K |
| Tolerance on the temperature coefficient | $\pm 30 \times 10^{-6}$/K |
| Marking colour of the temperature coefficient | black |
| Climatic category (IEC 68) | 55/125/56 |

**Table 6** **Preferred** capacitance range, temperature coefficient **NP0 (C0G)**

| CAPACITANCE VALUE[1] (pF) | TOLERANCE | SIZE (see Table 1) | MARKING | SUFFIX OF CATALOGUE NUMBER (see Table 2) |
|---|---|---|---|---|
| 1.8 | ±0.25 pF | I[2] | 1p8 | 09188 |
| 2.2 | ±0.25 pF | I | 2p2 | 09228 |
| 2.7 | ±0.25 pF | I | 2p7 | 09278 |
| 3.3 | ±0.25 pF | I | 3p3 | 09338 |
| 3.9 | ±0.25 pF | I | 3p9 | 09398 |
| 4.7 | ±0.25 pF | I | 4p7 | 09478 |
| 5.6 | ±0.25 pF | I | 5p6 | 09568 |
| 6.8 | ±0.25 pF | I | 6p8 | 09688 |
| 8.2 | ±0.25 pF | I | 8p2 | 09828 |
| 10 | ±2% | I | 10p | 10109 |
| 12 | ±2% | I | 12p | 10129 |
| 15 | ±2% | I | 15p | 10159 |
| 18 | ±2% | I | 18p | 10189 |
| 22 | ±2% | I | 22p | 10229 |
| 27 | ±2% | I | 27p | 10279 |
| 33 | ±2% | I | 33p | 10339 |
| 39 | ±2% | IIA | 39p | 10399 |
| 47 | ±2% | IIA | 47p | 10479 |
| 56 | ±2% | IIA | 56p | 10569 |
| 68 | ±2% | IIB | 68p | 10689 |
| 82 | ±2% | IIB | 82p | 10829 |
| 100 | ±2% | III | n10 | 10101 |
| 120 | ±2% | III | n12 | 10121 |
| 150 | ±2% | IV | n15 | 10151 |
| 180 | ±2% | IV | n18 | 10181 |
| 220 | ±2% | V | n22 | 10221 |

**Notes**

1. Other capacitance values and tolerances are available on request.
2. Maximum thickness 2.5 mm.

**Table 7** Conditions for Table 8; capacitors with temperature coefficient **N150 (P2G)**, rated voltage 100 V (DC)

| DESCRIPTION | VALUE |
|---|---|
| Capacitance range | 3.9 to 220 pF (E12 series) |
| Temperature coefficient of the capacitance $\left(\frac{\Delta C}{C\Delta T}\right)$ | $-150 \times 10^{-6}$/K |
| Tolerance on the temperature coefficient | $\pm 30 \times 10^{-6}$/K |
| Marking colour of the temperature coefficient | orange |
| Climatic category (IEC 68) | 55/085/21 |

**Table 8** **Preferred** capacitance range, temperature coefficient **N150 (P2G)**

| CAPACITANCE VALUE[1] (pF) | TOLERANCE | SIZE (see Table 1) | MARKING | SUFFIX OF CATALOGUE NUMBER (see Table 2) |
|---|---|---|---|---|
| 3.9 | ±0.25 pF | I[2] | 3p9 | 33398 |
| 4.7 | ±0.25 pF | I | 4p7 | 33478 |
| 5.6 | ±0.25 pF | I | 5p6 | 33568 |
| 6.8 | ±0.25 pF | I | 6p8 | 33688 |
| 8.2 | ±0.25 pF | I | 8p2 | 33828 |
| 10 | ±2% | I | 10p | 34109 |
| 12 | ±2% | I | 12p | 34129 |
| 15 | ±2% | I | 15p | 34159 |
| 18 | ±2% | I | 18p | 34189 |
| 22 | ±2% | I | 22p | 34229 |
| 27 | ±2% | I | 27p | 34279 |
| 33 | ±2% | I | 33p | 34339 |
| 39 | ±2% | IIA | 39p | 34399 |
| 47 | ±2% | IIA | 47p | 34479 |
| 56 | ±2% | IIB | 56p | 34569 |
| 68 | ±2% | IIB | 68p | 34689 |
| 82 | ±2% | III | 82p | 34829 |
| 100 | ±2% | III | n10 | 34101 |
| 120 | ±2% | IV | n12 | 34121 |
| 150 | ±2% | IV | n15 | 34151 |
| 180 | ±2% | IV | n18 | 34181 |
| 220 | ±2% | V | n22 | 34221 |

**Notes**

1. Other capacitance values and tolerances are available on request.
2. Maximum thickness 2.5 mm.

**Table 9** Conditions for Table 10; capacitors with temperature coefficient **N750 (U2J)**, rated voltage 100 V (DC)

| DESCRIPTION | VALUE |
|---|---|
| Capacitance range | 3.9 to 330 pF (E12 series) |
| Temperature coefficient of the capacitance $\left(\frac{\Delta C}{C\Delta T}\right)$ | $-750 \times 10^{-6}$/K |
| Tolerance on the temperature coefficient | $\pm 120 \times 10^{-6}$/K |
| Marking colour of the temperature coefficient | violet |
| Climatic category (IEC 68) | 55/085/21 |

**Table 10 Preferred** capacitance range, temperature coefficient **N750 (U2J)**

| CAPACITANCE VALUE[1] (pF) | TOLERANCE | SIZE (see Table 1) | MARKING | SUFFIX OF CATALOGUE NUMBER (see Table 2) |
|---|---|---|---|---|
| 3.9 | ±0.25 pF | I[2] | 3p9 | 57398 |
| 4.7 | ±0.25 pF | I | 4p7 | 57478 |
| 5.6 | ±0.25 pF | I | 5p6 | 57568 |
| 6.8 | ±0.25 pF | I | 6p8 | 57688 |
| 8.2 | ±0.25 pF | I | 8p2 | 57828 |
| 10 | ±2% | I | 10p | 58109 |
| 12 | ±2% | I | 12p | 58129 |
| 15 | ±2% | I | 15p | 58159 |
| 18 | ±2% | I | 18p | 58189 |
| 22 | ±2% | I | 22p | 58229 |
| 27 | ±2% | I | 27p | 58279 |
| 33 | ±2% | I | 33p | 58339 |
| 39 | ±2% | I | 39p | 58399 |
| 47 | ±2% | I | 47p | 58479 |
| 56 | ±2% | IIA | 56p | 58569 |
| 68 | ±2% | IIA | 68p | 58689 |
| 82 | ±2% | IIB | 82p | 58829 |
| 100 | ±2% | IIB | n10 | 58101 |
| 120 | ±2% | III | n12 | 58121 |
| 150 | ±2% | III | n15 | 58151 |
| 180 | ±2% | IV | n18 | 58181 |
| 220 | ±2% | IV | n22 | 58221 |
| 270 | ±2% | V | n27 | 58271 |
| 330 | ±2% | V | n33 | 58331 |

**Notes**

1. Other capacitance values and tolerances are available on request.
2. Maximum thickness 2.5 mm.

**Table 11** Conditions for Table 12; capacitors with temperature coefficient **N1500 (P3K)**, rated voltage 100 V (DC)

| DESCRIPTION | VALUE |
|---|---|
| Capacitance range | 18 to 560 pF (E12 series) |
| Temperature coefficient of the capacitance $\left(\frac{\Delta C}{C \Delta T}\right)$ | $-1500 \times 10^{-6}$/K |
| Tolerance on the temperature coefficient | $(0 \text{ to } +500) \times 10^{-6}$/K |
| Marking colour of the temperature coefficient | orange/orange |
| Climatic category (IEC 68) | 55/125/56 |

**Table 12 Preferred** capacitance range, temperature coefficient **N1500 (P3K)**

| CAPACITANCE VALUE[1] (pF) | TOLERANCE | SIZE (see Table 1) | MARKING | SUFFIX OF CATALOGUE NUMBER (see Table 2) |
|---|---|---|---|---|
| 18 | ±2% | I[2] | 18p | 70189 |
| 22 | ±2% | I | 22p | 70229 |
| 27 | ±2% | I | 27p | 70279 |
| 33 | ±2% | I | 33p | 70339 |
| 39 | ±2% | I | 39p | 70399 |
| 47 | ±2% | I | 47p | 70479 |
| 56 | ±2% | I | 56p | 70569 |
| 68 | ±2% | I | 68p | 70689 |
| 82 | ±2% | I | 82p | 70829 |
| 100 | ±2% | IIA | n10 | 70101 |
| 120 | ±2% | IIA | n12 | 70121 |
| 150 | ±2% | IIB | n15 | 70151 |
| 180 | ±2% | IIB | n18 | 70181 |
| 220 | ±2% | III | n22 | 70221 |
| 270 | ±2% | III | n27 | 70271 |
| 330 | ±2% | IV | n33 | 70331 |
| 390 | ±2% | IV | n39 | 70391 |
| 470 | ±2% | V | n47 | 70471 |
| 560 | ±2% | V | n56 | 70561 |

**Notes**

1. Other capacitance values and tolerances are available on request.
2. Maximum thickness 2.5 mm.

## ELECTRICAL CHARACTERISTICS

The capacitors meet the essential requirements of *"IEC 384-8"*. Unless stated otherwise all electrical values apply at an ambient temperature of 20 ±1 °C, an atmospheric pressure of 86 to 106 kPa and a relative humidity of 63 to 67%.

| DESCRIPTION | VALUE |
|---|---|
| Capacitance values (note 1) measured at 1 MHz, ≤5 V | see Tables 4 to 12 |
| Rated DC voltage | 100 V |
| DC test voltage; duration 1 minute | 300 V |
| DC test voltage of coating; duration 1 minute | 300 V |
| Insulation resistance at 100 V (DC) after 1 minute | ≥10000 MΩ |
| Tan δ (note 1) measured at 1 MHz, ≤5 V: | |
| $C \leq 50$ pF | $\leq 15\left(\frac{15}{C}+0.7\right)\times 10^{-4}$; $<55\times 10^{-4}$ |
| $C > 50$ pF | $\leq 15\times 10^{-4}$ |
| Category temperature range | −55 to +85 °C (N150, N750);<br>−55 to +125 °C (P100, NP0, N1500) |
| Storage temperature range | −55 to +85 °C |

**Note**

1. Including 2 mm per connecting lead.

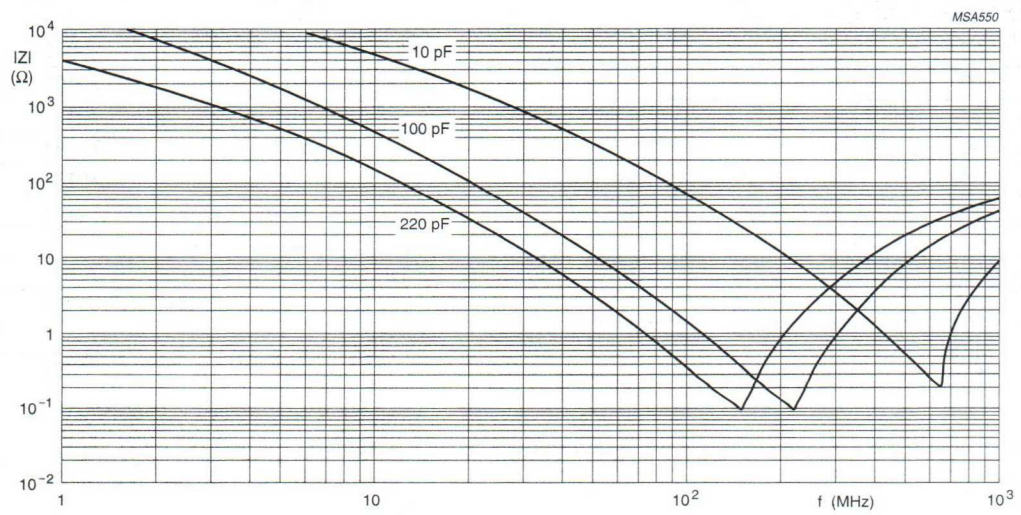


Fig.5 Typical impedance |Z| as a function of frequency.

# Miniature ceramic plate capacitors

# Class 2, 63 V and 100 V (DC) (flanged types)

## FEATURES

- General purpose
- Coupling and decoupling
- Space saving.

## APPLICATIONS

In electronic circuits where non-linear change of capacitance with temperature is permissible and low losses are not essential, i.e. coupling and decoupling. Because of their small size the capacitors are suitable for use in circuitry with high component density.

## DESCRIPTION

The capacitors consist of a thin rectangular ceramic plate, both sides of which are metallized. The tinned connecting leads are secured using a high melting point solder. The capacitors are encapsulated in epoxy lacquer, which is resistant to all commonly used cleaning solvents. They have small dimensions and narrow tolerances on the lead spacing. The leads are provided with a flange, which guarantees that the leads are free of lacquer, and its shape allows soldering gasses to escape freely, ensuring excellent solderability. This makes the capacitors suitable for both hand-mounting and automatic insertion.

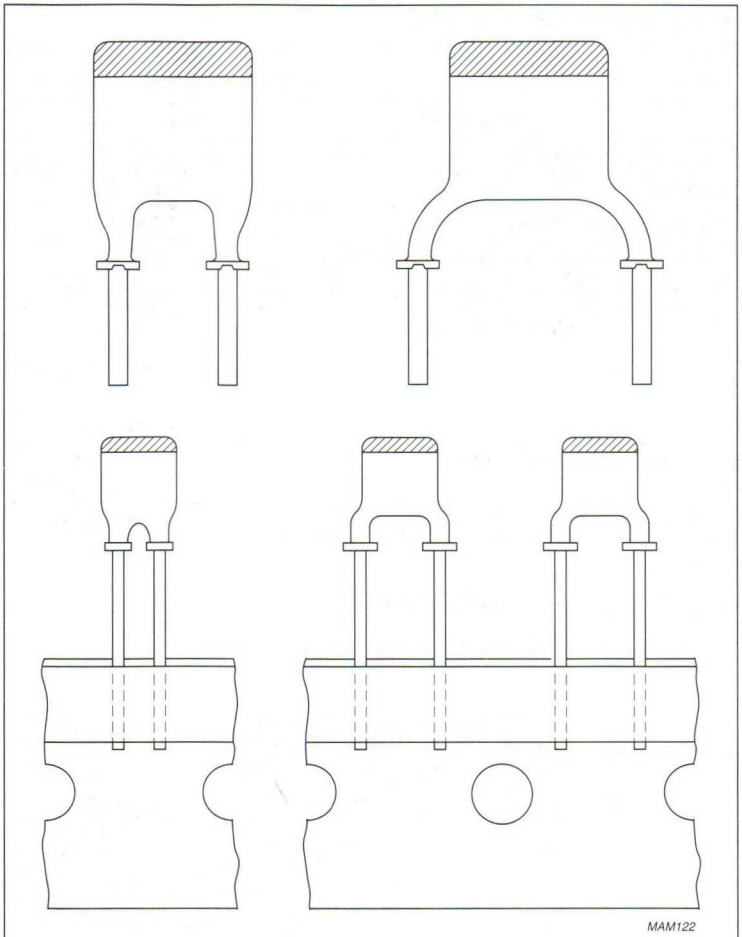


Fig.1 Outlines.

## QUICK REFERENCE DATA

| DESCRIPTION | VALUE | | |
|---|---|---|---|
| | 2222 630 ..... | 2222 640 ..... | 2222 629 ..... |
| Capacitance range | 180 to 6800 pF (E12 series) | 1000 to 15000 pF (E6 series) | 1000 to 47000 pF (E3 series) |
| Dielectric material | K2000 | K5000 | K14000 |
| Rated DC voltage | 100 V | 100 V | 63 V |
| Tolerance on capacitance | ±10% | −20/+50% | −20/+80% |
| Sectional specification | IEC 384-9 (2C2 and 2D1); EIA (X5S/X7T) | IEC 384-9 (2E2); EIA (X5U) | IEC 384-9 (2F6); EIA (Y5V) |
| Climatic category (IEC 68) | 55/125/56 | 55/105/21 | 10/085/21 |

## MECHANICAL DATA

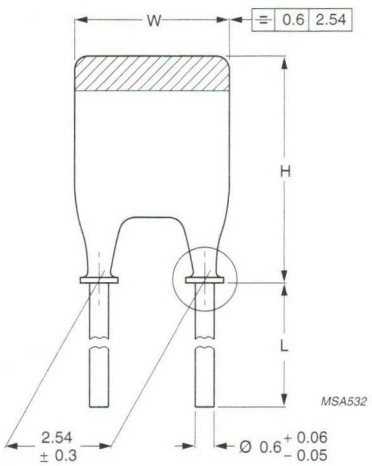


Dimensions in mm.
For dimensions H, L and W see Tables 1 and 2.

Fig.2 Component outline style 1.

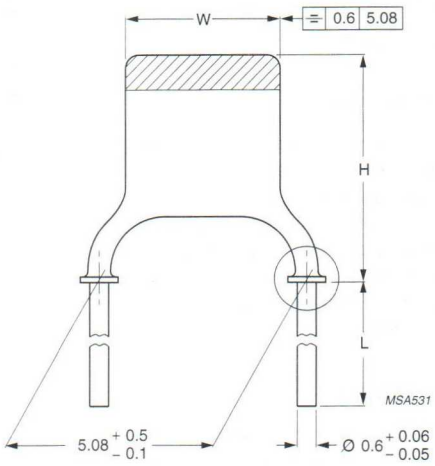


Dimensions in mm.
For dimensions H, L and W see Tables 1 and 2.

Fig.3 Component outline style 2.

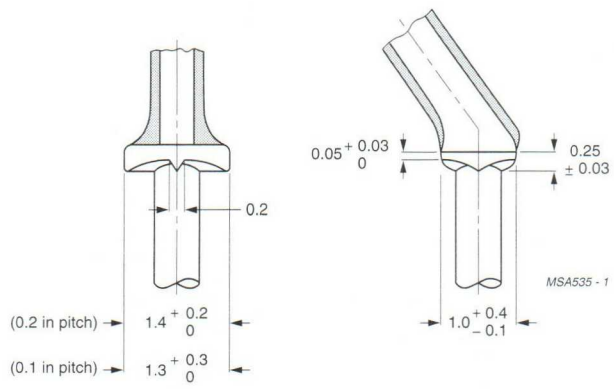


Dimensions in mm.

Fig.4 Detail of flange.

### Marking

The body of the capacitor is tan coloured. The capacitors also have a colour mark on top indicating the temperature dependency of the capacitance:

yellow for type 2222 630 .....

blue for type 2222 640 .....

green for type 2222 629 .....

The capacitance value is indicated by a marking code in a contrasting colour on the body. Refer to Tables 3, 4 and 5 for marking codes.

### Mounting

When bending, cutting or flattening, the leads should be relieved of the applied load by supporting them at the capacitor body.

Soldering conditions:

max. 265 °C, max. 10 s.

The capacitors are suitable for mounting on printed-circuit boards (hand-mounting or automatic insertion).

### Physical dimensions

**Table 1** Capacitor dimensions and mass

| SIZE[1] | W[2] (mm) | H[2] (mm) | | MASS (g) |
|---|---|---|---|---|
| | | STYLE 1 | STYLE 2 | |
| I | 3.6 (–1.1) | 5.0 (–1.5) | 6.3 (–1.8) | ≈0.14 |
| IIA | 3.9 (–1.4) | 5.3 (–1.7) | 6.7 (–2.0) | ≈0.15 |
| IIB | 4.5 (–1.8) | 6.0 (–2.1) | 7.3 (–2.4) | ≈0.15 |
| III | 5.3 (–1.8) | 6.8 (–2.3) | 8.1 (–2.6) | ≈0.17 |
| IV | 6.2 (–2.0) | 7.7 (–2.4) | 9.0 (–2.7) | ≈0.20 |
| V | 6.2 (–2.0) | 10.3 (–2.8) | 11.2 (–3.1) | ≈0.23 |

**Notes**

1. Unless indicated in Tables 3, 4 and 5, the thickness of the capacitors does not exceed 2.3 mm.
2. Tolerances are given between parentheses.

### PACKAGING

For details refer to this handbook, Chapter *"Miniature ceramic plate capacitors"*, Section *"General data"*.

### ORDERING INFORMATION

**Table 2** Catalogue numbers

| PITCH P | LEAD DIAMETER d | STYLE | CATALOGUE NUMBERS[1] | | | |
|---|---|---|---|---|---|---|
| | | | BULK PACKED | | ON TAPE[2] (REEL) | ON TAPE[2] (AMMOPACK) |
| | | | L ≥ 13 mm | L = 4 ±0.5 mm | | |
| 2.54 mm (0.1 inch) | 0.6 mm (0.024 inch) | 1 | 2222 630 08... | 2222 630 18... | 2222 630 51... | 2222 630 61... |
| | | | 2222 640 08... | 2222 640 18... | 2222 640 51... | 2222 640 61... |
| | | | 2222 629 08... | 2222 629 18... | 2222 629 51... | 2222 629 61... |
| 5.08 mm (0.2 inch) | 0.6 mm (0.024 inch) | 2 | 2222 630 09... | 2222 630 19... | 2222 630 53... | 2222 630 63... |
| | | | 2222 640 09... | 2222 640 19... | 2222 640 53... | 2222 640 63... |
| | | | 2222 629 09... | 2222 629 19... | 2222 629 53... | 2222 629 63... |

**Notes**

1. Catalogue number to be completed by adding the 3-digit suffix for required capacitance value, see Tables 3, 4 and 5.
2. $H_0$ = 18.25 mm.

**Table 3** **Preferred** capacitance range for **2222 630 .....**

| CAPACITANCE VALUE (pF) | SIZE (see Table 1) | MARKING | SUFFIX OF CATALOGUE NUMBER (see Table 2) |
|---|---|---|---|
| 180 | I[1] | n18 | 181 |
| 220 | I[1] | n22 | 221 |
| 270 | I | n27 | 271 |
| 330 | I | n33 | 331 |
| 390 | I | n39 | 391 |
| 470 | I | n47 | 471 |
| 560 | I | n56 | 561 |
| 680 | I | n68 | 681 |
| 820 | I | n82 | 821 |
| 1000 | I | 1n0 | 102 |
| 1200 | IIA | 1n2 | 122 |
| 1500 | IIA | 1n5 | 152 |
| 1800 | IIB | 1n8 | 182 |
| 2200 | IIB | 2n2 | 222 |
| 2700 | III | 2n7 | 272 |
| 3300 | III | 3n3 | 332 |
| 3900 | IV | 3n9 | 392 |
| 4700 | IV | 4n7 | 472 |
| 5600 | V | 5n6 | 562 |
| 6800 | V | 6n8 | 682 |

**Note**

1. Maximum thickness 2.5 mm.

**Table 4** **Preferred** capacitance range for **2222 640 .....**

| CAPACITANCE VALUE (pF) | SIZE (see Table 1) | MARKING | SUFFIX OF CATALOGUE NUMBER (see Table 2) |
|---|---|---|---|
| 1000 | I | 1n0 | 102 |
| 1500 | I | 1n5 | 152 |
| 2200 | I | 2n2 | 222 |
| 3300 | IIA | 3n3 | 332 |
| 4700 | IIB | 4n7 | 472 |
| 6800 | III | 6n8 | 682 |
| 10000 | IV | 10n | 103 |
| 15000 | V | 15n | 153 |

**Table 5** **Preferred** capacitance range for **2222 629 .....**

| CAPACITANCE VALUE (pF) | SIZE (see Table 1) | MARKING | SUFFIX OF CATALOGUE NUMBER (see Table 2) |
|---|---|---|---|
| 1000 | I | 1n0 | 102 |
| 2200 | I | 2n2 | 222 |
| 4700 | I | 4n7 | 472 |
| 10000 | IIB | 10n | 103 |
| 22000 | IV | 22n | 223 |
| 47000 | V | 47n | 473 |

## ELECTRICAL CHARACTERISTICS

### Capacitors 2222 630 (colour mark yellow)

The capacitors meet the essential requirements of *"IEC 384-8"* (2C2 and 2D1) *"EIA"* (X5S and X7T). Unless stated otherwise all electrical values apply at an ambient temperature of 20 ±1 °C, an atmospheric pressure of 86 to 106 kPa and a relative humidity of 63 to 67%.

| DESCRIPTION | VALUE |
|---|---|
| Capacitance values measured at 1 kHz, 1 V | 180 to 6800 pF; E12 series (see Table 3) |
| Dielectric material | K2000 |
| Tolerance on capacitance, after 1000 hours | ±10% |
| Maximum capacitance change with respect to capacitance value at 20 °C | +20 to −20% (see Fig.5) from −55 to +85 °C; +20 to −30% from −55 to +125 °C |
| Rated DC voltage | 100 V |
| DC test voltage; duration 1 minute | 300 V |
| DC test voltage of coating; duration 1 minute | 300 V |
| Insulation resistance at 100 V (DC) after 1 minute | ≥4 000 MΩ |
| Tan δ measured at 1 kHz, 1 V | ≤3.5% |
| Maximum voltage dependency of the capacitance between 0 and 40 V | −5% |
| Category temperature range | −55 to +85 °C (2C2) and −55 to +125 °C (2D1) |
| Storage temperature range | −55 to +85 °C |
| Ageing | typical 1.5% per time decade |
| Climatic category (IEC 68) | 55/125/56 |

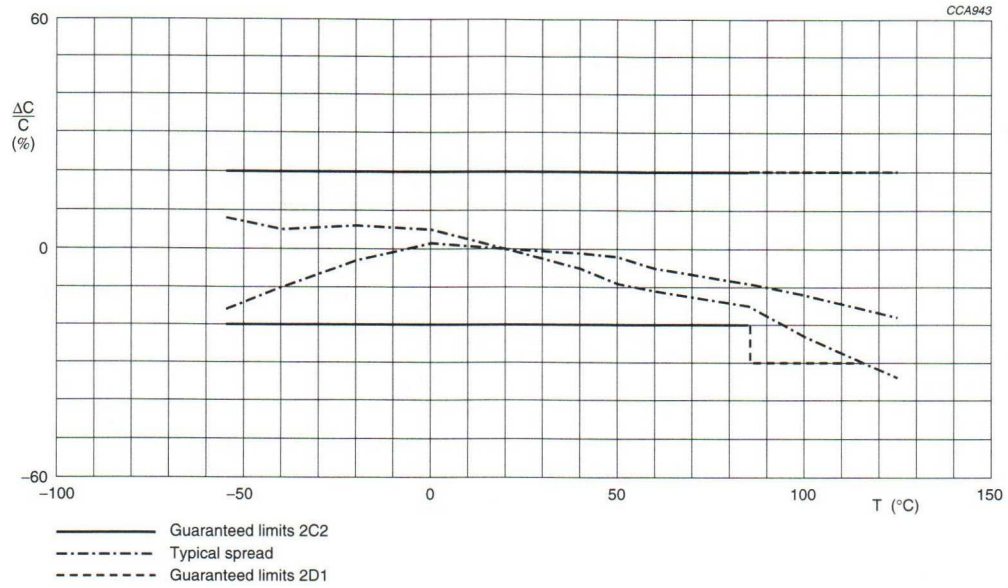


Fig.5 Typical capacitance change with respect to capacitance value at 20 °C as a function of temperature.

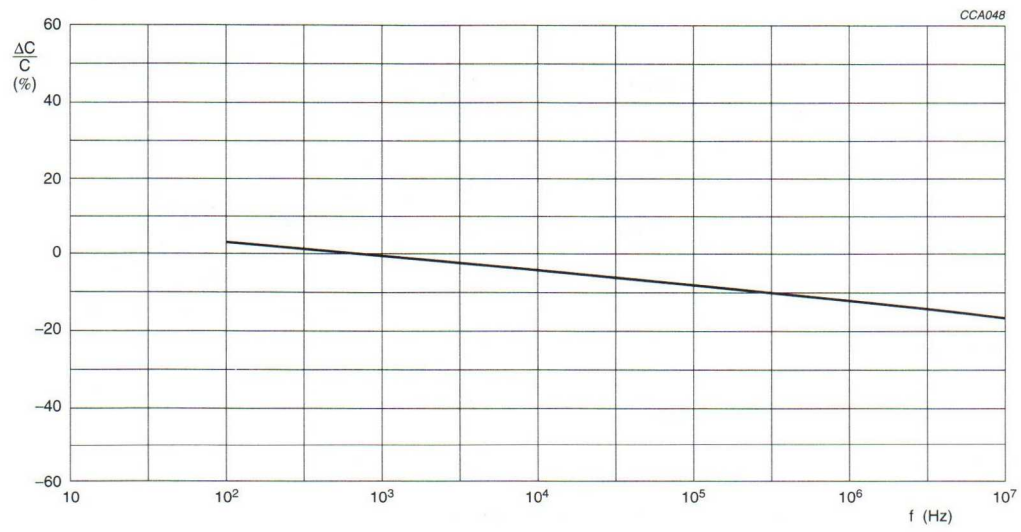


U = 1 V.

Fig.6 Typical capacitance change with respect to the capacitance value at 1 kHz as a function of frequency.

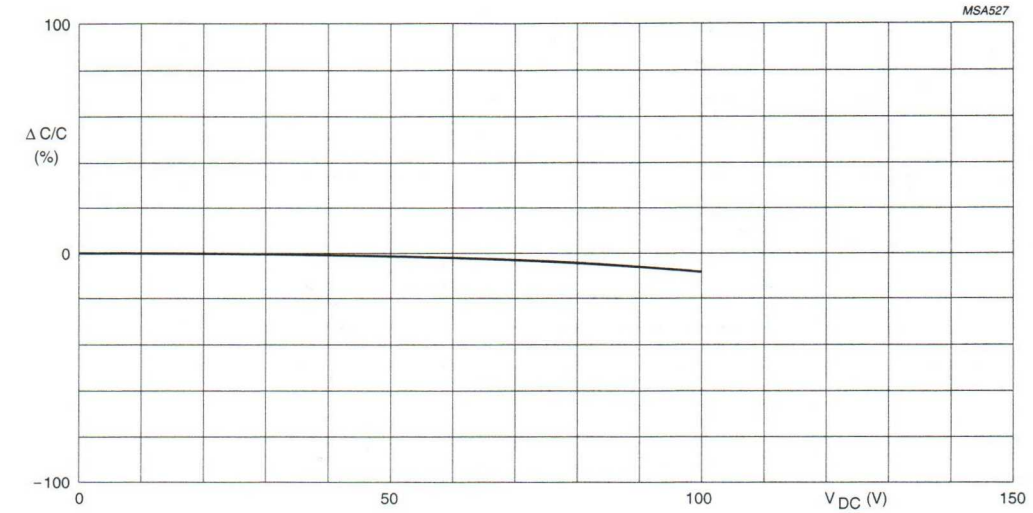


f = 1 kHz.
U = 1 V.
T = 20 °C.

Fig.7 Typical capacitance change with respect to the capacitance value at 0 V as a function of DC voltage.

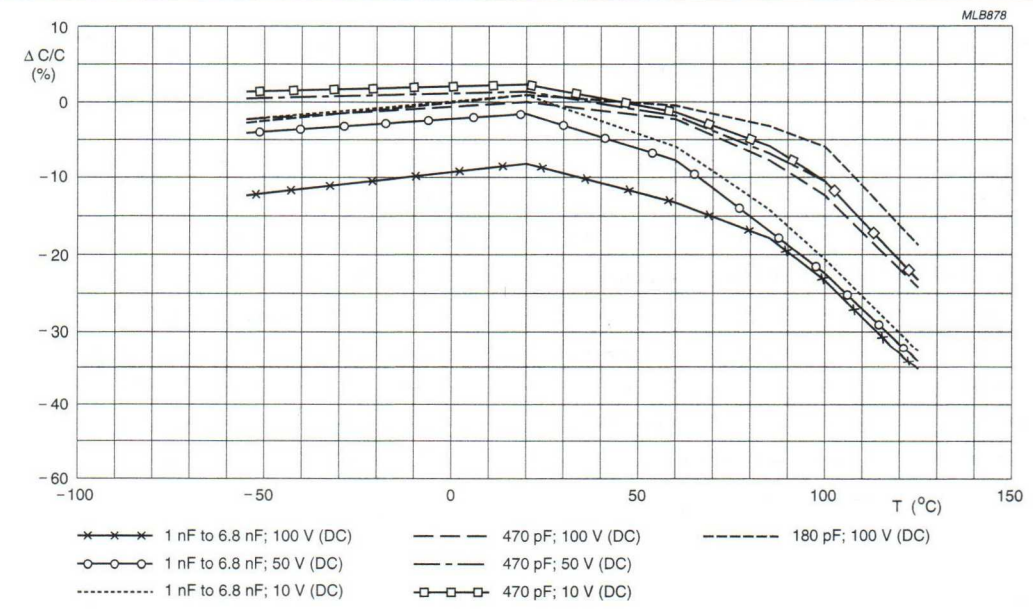


Fig.8 Typical capacitance change with respect to the capacitance value at 0 V and 20 °C as a function of temperature at different DC voltages.

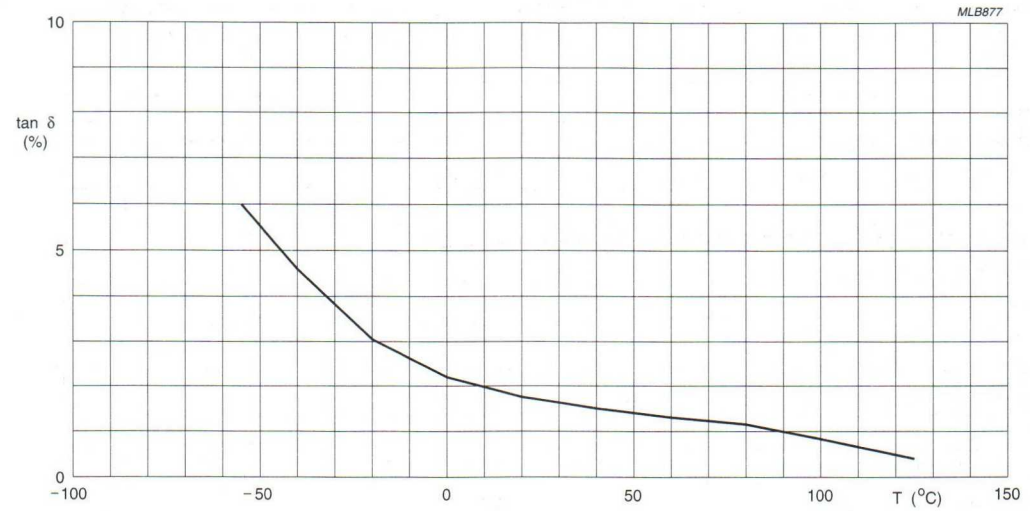


f = 1 kHz.
U = 1 V.

Fig.9 Typical tan δ as a function of temperature.

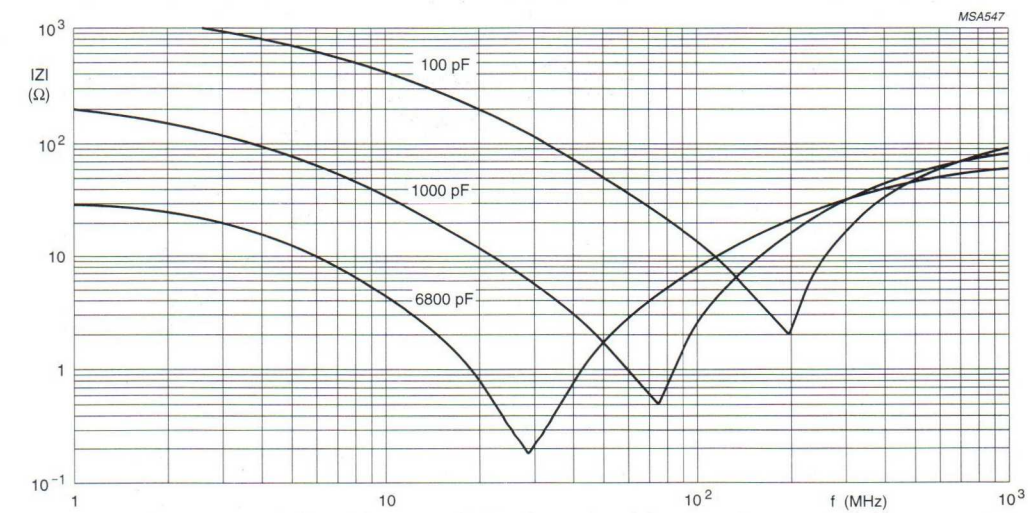


Fig.10 Typical impedance |Z| as a function of frequency.

# Miniature ceramic plate capacitors

## Class 2, 63 V and 100 V (DC) (flanged types)

**Capacitors 2222 640 (colour mark blue)**

The capacitors meet the essential requirements of *"IEC 384-9"* (2E2), *"EIA"* (X5U). Unless stated otherwise all electrical values apply at an ambient temperature of 20 ±1 °C, an atmospheric pressure of 86 to 106 kPa and a relative humidity of 63 to 67%.

| DESCRIPTION | VALUE |
|---|---|
| Capacitance values measured at 1 kHz, 1 V | 1000 to 15000 pF; E6 series (see Table 4) |
| Tolerance on capacitance, after 1000 hours | –20 to +50% |
| Dielectric material | K5000 |
| Maximum capacitance change with respect to capacitance value at 20 °C | +20 to –55% (see Fig.11) |
| Rated DC voltage | 100 V |
| DC test voltage; duration 1 minute | 300 V |
| DC test voltage of coating; duration 1 minute | 300 V |
| Insulation resistance at 100 V (DC) after 1 minute | ≥4 000 MΩ |
| Tan δ measured at 1 kHz, 1 V | ≤3.5% |
| Category temperature range | –55 to +105 °C |
| Storage temperature range | –55 to +85 °C |
| Ageing | typical 5% per time decade |
| Climatic category (IEC 68) | 55/105/21 |

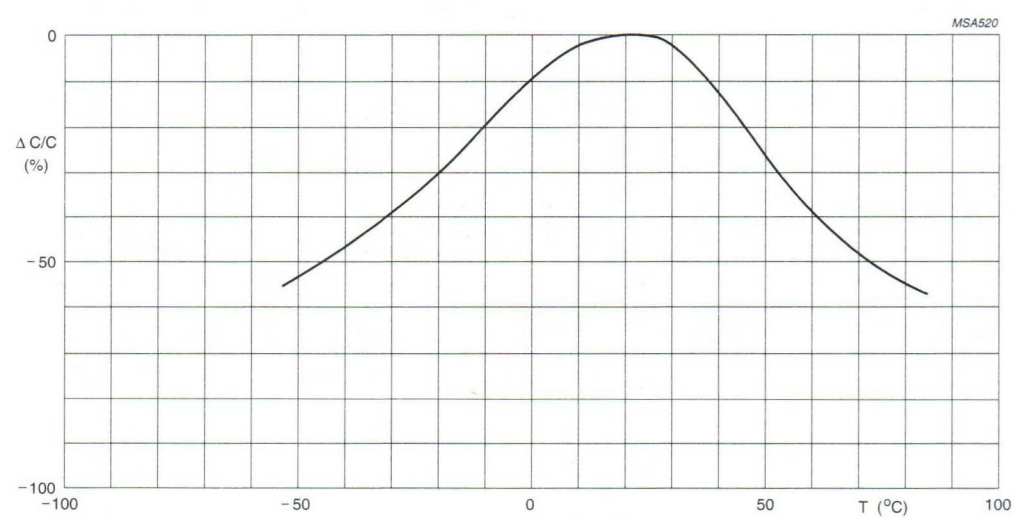


f = 1 kHz.
U = 1 V.

Fig.11 Maximum capacitance change with respect to capacitance value at 20 °C as a function of temperature.

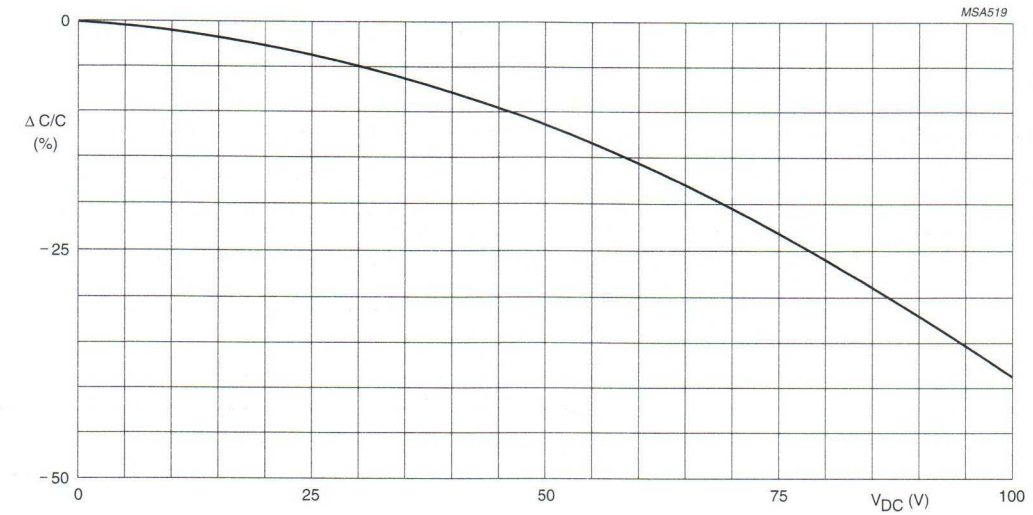


f = 1 kHz.
U = 1 V.

Fig.12 Typical capacitance change with respect to capacitance value at 20 °C as a function of DC voltage.

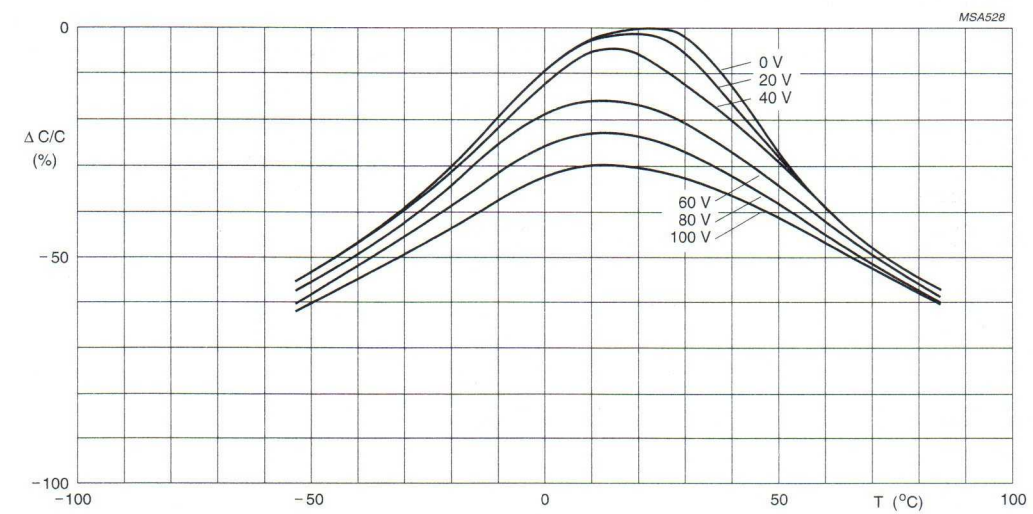


f = 1 kHz.
U = 1 V.

Fig.13 Typical capacitance change with respect to the capacitance value at 0 V and 20 °C as a function of temperature at different DC voltages.

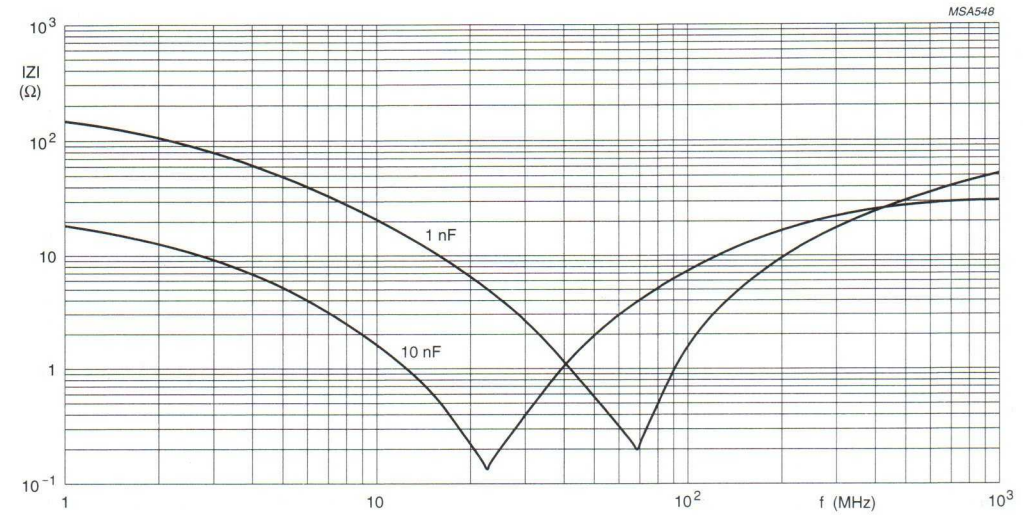


Fig.14 Typical impedance |Z| as a function of frequency.

**Capacitors 2222 629 (colour mark green)**

The capacitors meet the essential requirements of *"IEC 384-9"* (2F6), *"EIA"* (Y5U). Unless stated otherwise all electrical values apply at an ambient temperature of 20 ±1 °C, an atmospheric pressure of 86 to 106 kPa and a relative humidity of 63 to 67%.

| DESCRIPTION | VALUE |
|---|---|
| Capacitance values measured at 1 kHz, 1 V | 1000 to 47000 pF; E3 series (see Table 5) |
| Tolerance on capacitance, after 1000 hours | −20 to +80% |
| Dielectric material | K14000 |
| Maximum capacitance change with respect to capacitance value at 20 °C | +20 to −85% (see Figs 15 and 16) |
| Rated DC voltage at 85 °C | 63 V |
| DC test voltage; duration 1 minute | 200 V |
| DC test voltage of coating; duration 1 minute | 200 V |
| Insulation resistance at 100 V (DC) after 1 minute | ≥4000 MΩ |
| Tan δ measured at 1 kHz, 1 V | ≤3.5% |
| Category temperature range | −10 to +85 °C |
| Storage temperature range | −55 to +85 °C |
| Ageing | typical 5% per time decade |
| Climatic category (IEC 68) | 10/085/21 |

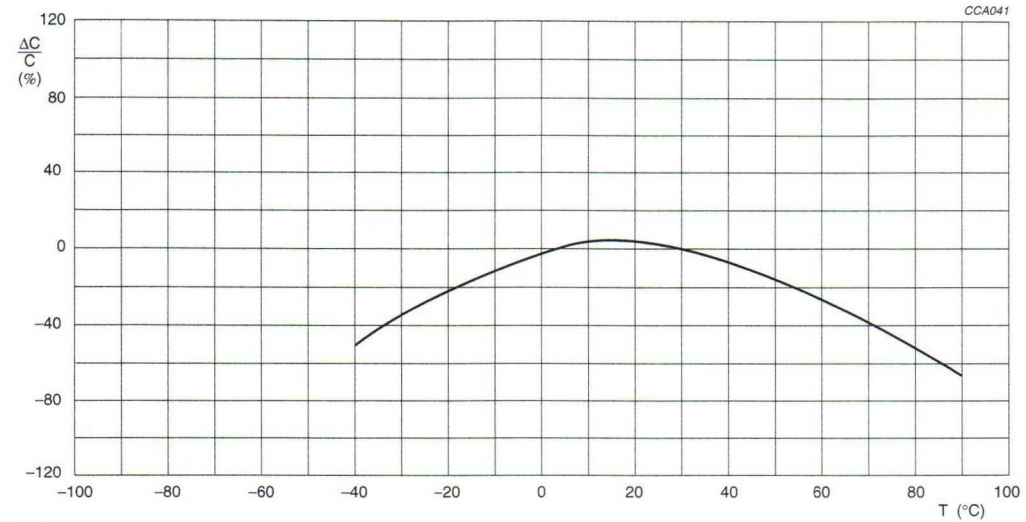


Fig.15 Typical capacitance change with respect to capacitance value at 20 °C as a function of temperature for capacitance value 1000 pF.

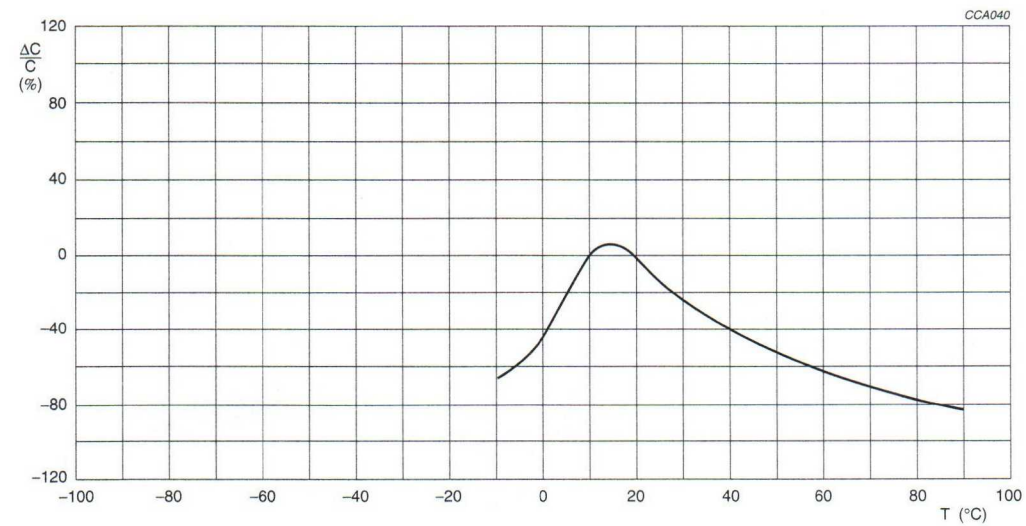


Fig.16 Typical capacitance change with respect to capacitance value at 20 °C as a function of temperature for capacitance values 2200 pF to 47000 pF.

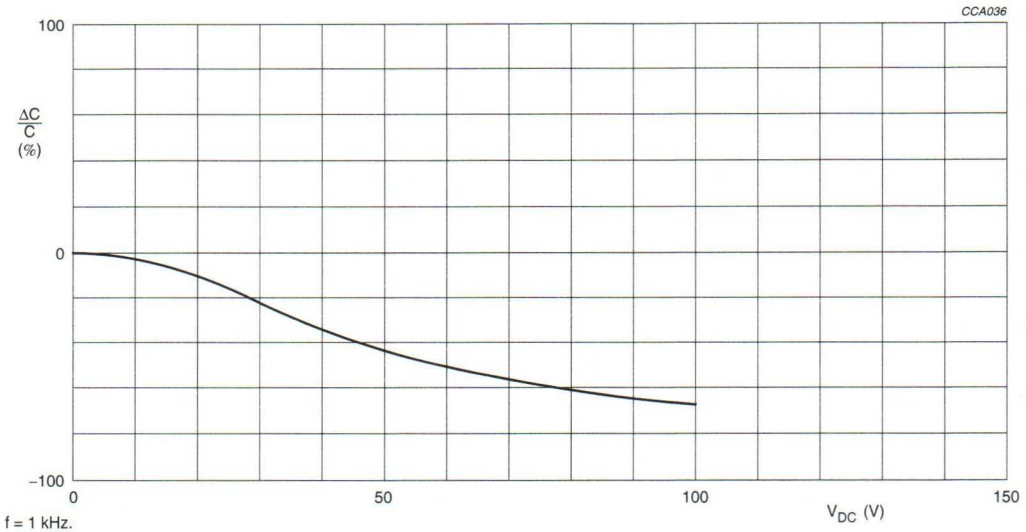


Fig.17 Typical capacitance change with respect to the capacitance value at 0 V as a function of DC voltage for capacitance values 2200 to 47000 pF.

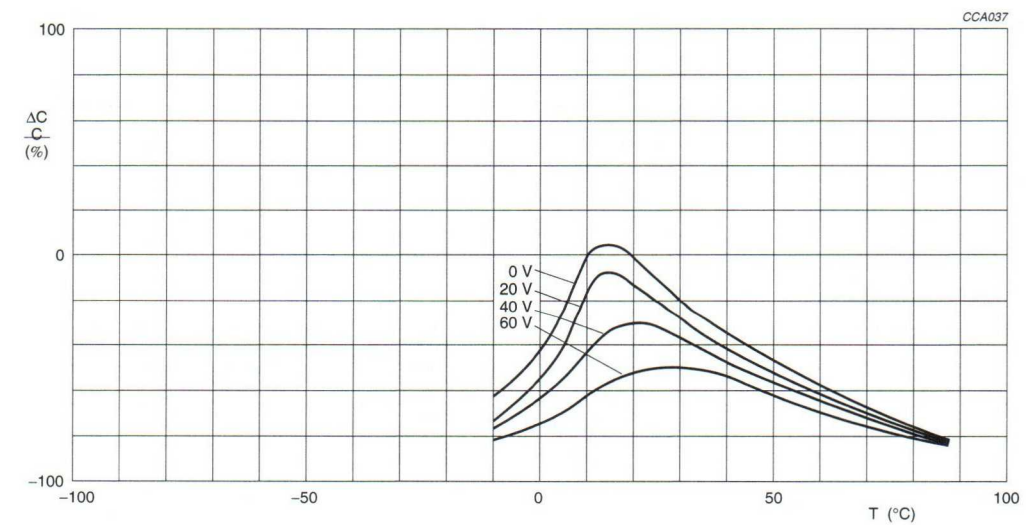


Fig.18 Typical capacitance change with respect to the capacitance value at 0 V and 20 °C as a function of temperature at different DC voltages for capacitance values 2200 to 47000 pF.

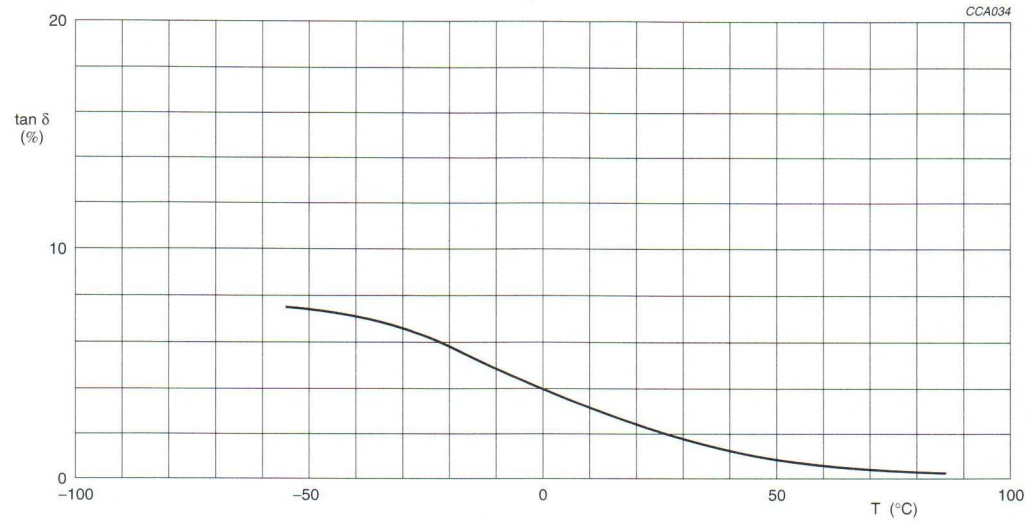


f = 1 kHz.
U = 1 V.

Fig.19 Typical tan δ as a function of temperature for capacitance values 2200 to 47000 pF.

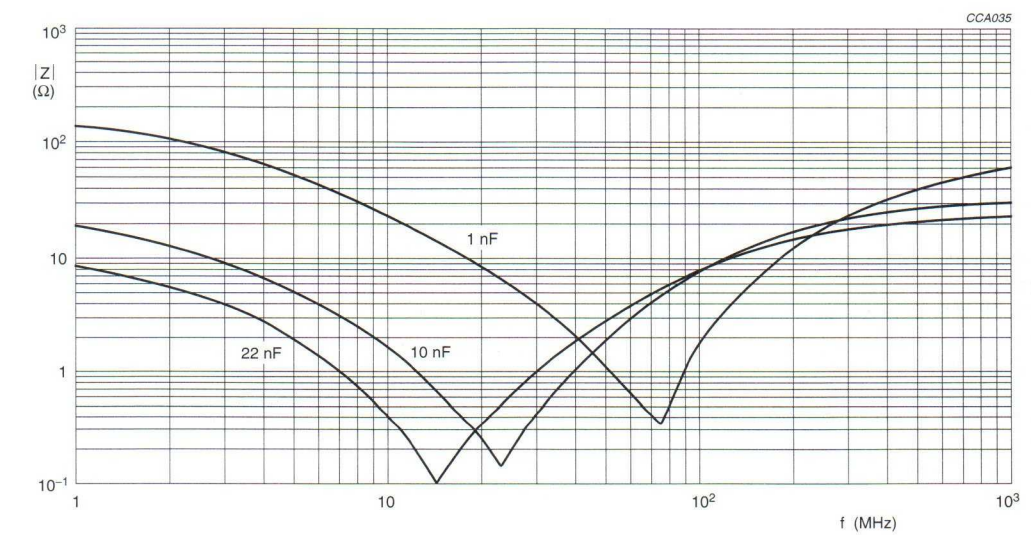


Fig.20 Typical impedance |Z| as a function of frequency.

# Miniature ceramic plate capacitors

# Class 1, 500 V (DC) (flanged types)

## FEATURES

- Professional circuits
- High-frequency circuits
- Temperature compensating
- High stability
- Space saving
- High reliability.

## APPLICATIONS

In a great variety of electronic circuits, e.g. in filters and tuning circuits where high stability and/or temperature compensation are a requirement. Because of their small size the capacitors are suitable for use in circuitry with high component density.

## DESCRIPTION

The capacitors consist of a thin rectangular ceramic plate, both sides of which are metallized, and tinned connecting leads are secured using a high melting point solder. The capacitors are encapsulated in epoxy lacquer, which is resistant to all commonly used cleaning solvents. They have small dimensions and narrow tolerances on the lead spacing. The leads are provided with a flange, which guarantees that the leads are free of lacquer, and its shape allows soldering gasses to escape freely, ensuring excellent solderability. This makes the capacitors suitable for both hand-mounting and automatic insertion. The electrical properties are characterized by low losses, a narrow tolerance on capacitance (±0.25 pF or 2%), high stability and, owing to the absence of silver, an extremely good DC behaviour.

## QUICK REFERENCE DATA

| DESCRIPTION | VALUE |
|---|---|
| Capacitance range (E12 series) | 0.47 to 330 pF |
| Rated DC voltage | 500 V |
| Tolerance on capacitance | ±2% or ±0.25 pF |
| Temperature coefficients | P100, NP0, N150, N750 and N1500 |
| Sectional specification | IEC 384-8 |
| Climatic category (IEC 68) | 55/085/21 (N150, N750); 55/150/56 (P100, NP0, N1500) |

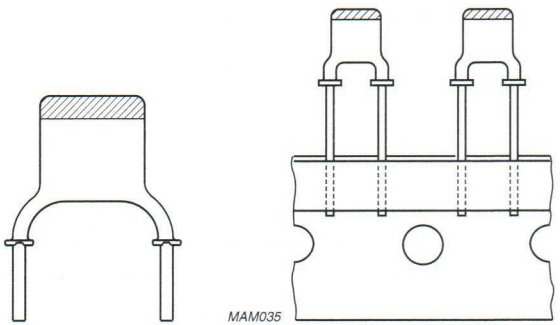


Fig.1 Outlines.

# Miniature ceramic plate capacitors

# Class 1, 500 V (DC) (flanged types)

## MECHANICAL DATA

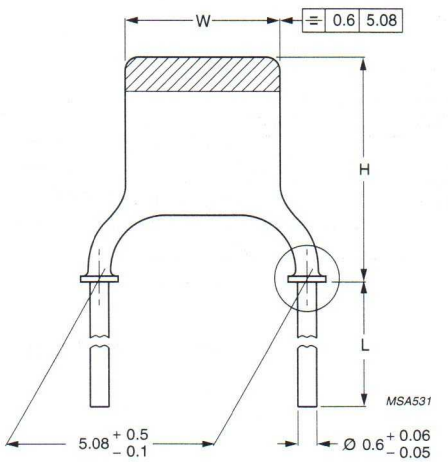


Dimensions in mm.
For dimensions H, L and W see Tables 1 and 2.

Fig.2 Component outline.

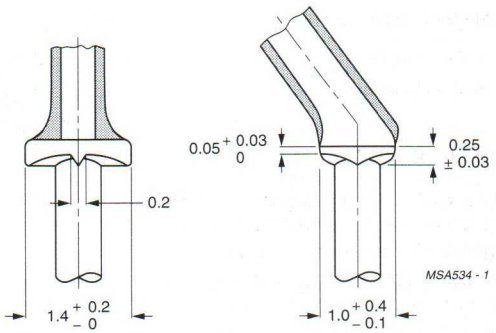


Dimensions in mm.

Fig.3 Detail of flange.

### Marking

The body of the capacitors is coloured grey. The temperature coefficient is indicated by a colour code in accordance with IEC and EIA recommendations. Capacitance value and voltage are indicated by a marking code in a contrasting colour on the body. Refer to Tables 3 to 12, for marking codes and colours.

### Mounting

When bending, cutting or flattening, the leads should be relieved of the applied load by supporting them at the capacitor body.

Soldering conditions:

max. 265 °C, max. 10 s.

The capacitors are suitable for mounting on printed-circuit boards (hand-mounting or automatic insertion).

### Physical dimensions

**Table 1** Capacitor dimensions and mass

| SIZE(1) | W(2) (mm) | H(2) (mm) | MASS (g) |
|---|---|---|---|
| I | 3.6 (–1.1) | 6.3 (–1.8) | ≈0.14 |
| IIA | 3.9 (–1.4) | 6.7 (–2.0) | ≈0.15 |
| IIB | 4.5 (–1.8) | 7.3 (–2.4) | ≈0.15 |
| III | 5.3 (–1.8) | 8.1 (–2.6) | ≈0.17 |
| IV | 6.2 (–2.0) | 9.0 (–2.7) | ≈0.20 |
| V | 6.2 (–2.0) | 11.2 (–3.1) | ≈0.23 |

**Notes**

1. Unless indicated in Tables 4 to 12, the thickness of the capacitors does not exceed 2.3 mm.
2. Tolerances are given between parentheses.

## PACKAGING

For details refer to this handbook, Chapter *"Miniature ceramic plate capacitors"*, Section *"General data"*.

## ORDERING INFORMATION

**Table 2** Catalogue numbers

| PITCH P | LEAD DIAMETER d | CATALOGUE NUMBERS(1) | | | |
|---|---|---|---|---|---|
| | | BULK PACKED | | ON TAPE (REEL) | ON TAPE(2) (AMMOPACK) |
| | | L ≥ 13 mm | L = 4 ±0.5 mm | | |
| 5.08 mm (0.2 inch) | 0.6 mm (0.024 inch) | 2222 652 ..... | 2222 653 ..... | 2222 654 ..... | 2222 691 ..... |

**Notes**

1. Catalogue numbers to be completed by adding the 5-digit suffix for required capacitance value, see Tables 4 to 12.
2. $H_0$ = 18.25 mm.

**Table 3** Conditions for Table 4; capacitors with temperature coefficient **P100 (M7G)**

| DESCRIPTION | VALUE |
|---|---|
| Capacitance range | 0.47 to 33 pF (E12 series) |
| Temperature coefficient of the capacitance $\left(\frac{\Delta C}{C \Delta T}\right)$ | $100 \times 10^{-6}$/K |
| Tolerance on the temperature coefficient | $\pm 30 \times 10^{-6}$/K |
| Marking colour of the temperature coefficient | red/violet |
| Climatic category (IEC 68) | 55/150/56 |

**Table 4** **Preferred** capacitance range, temperature coefficient **P100 (M7G)**

| CAPACITANCE VALUE[1] (pF) | TOLERANCE | SIZE (see Table 1) | MARKING CODE | | SUFFIX OF CATALOGUE NUMBER (see Table 2) |
|---|---|---|---|---|---|
| | | | VALUE | VOLTAGE[3] (V) | |
| 0.47 | ±0.25 pF | I[2] | p47 | 500 | 03477 |
| 0.56 | ±0.25 pF | I[2] | p56 | 500 | 03567 |
| 0.68 | ±0.25 pF | I[2] | p68 | 500 | 03687 |
| 0.82 | ±0.25 pF | I | p82 | 500 | 03827 |
| 1.0 | ±0.25 pF | I | 1p0 | 500 | 03108 |
| 1.2 | ±0.25 pF | I | 1p2 | 500 | 03128 |
| 1.5 | ±0.25 pF | I[2] | 1p5 | 500 | 03158 |
| 1.8 | ±0.25 pF | I | 1p8 | 500 | 03188 |
| 2.2 | ±0.25 pF | I | 2p2 | 500 | 03228 |
| 2.7 | ±0.25 pF | I | 2p7 | 500 | 03278 |
| 3.3 | ±0.25 pF | I | 3p3 | 500 | 03338 |
| 3.9 | ±0.25 pF | I | 3p9 | 500 | 03398 |
| 4.7 | ±0.25 pF | IIA | 4p7 | 500 | 03478 |
| 5.6 | ±0.25 pF | IIA | 5p6 | 500 | 03568 |
| 6.8 | ±0.25 pF | IIB | 6p8 | 500 | 03688 |
| 8.2 | ±0.25 pF | IIB | 8p2 | 500 | 03828 |
| 10 | ±2% | III | 10p | 500 | 04109 |
| 12 | ±2% | III | 12p | 500 | 04129 |
| 15 | ±2% | III | 15p | 500 | 04159 |
| 18 | ±2% | IV | 18p | 500 | 04189 |
| 22 | ±2% | IV | 22p | 500 | 04229 |
| 27 | ±2% | V | 27p | 500 | 04279 |
| 33 | ±2% | V | 33p | 500 | 04339 |

**Notes**

1. Other capacitance values and tolerances are available on request.
2. Maximum thickness 2.5 mm.
3. The voltage code may be marked on the front or rear side of the capacitor.

**Table 5** Conditions for Table 6; capacitors with temperature coefficient **NP0 (C0G)**

| DESCRIPTION | VALUE |
|---|---|
| Capacitance range | 0.82 to 150 pF (E12 series) |
| Temperature coefficient of the capacitance $\left(\frac{\Delta C}{C \Delta T}\right)$ | $0 \times 10^{-6}$/K |
| Tolerance on the temperature coefficient | $\pm 30 \times 10^{-6}$/K |
| Marking colour of the temperature coefficient | black |
| Climatic category (IEC 68) | 55/150/56 |

**Table 6** **Preferred** capacitance range, temperature coefficient **NP0 (C0G)**

| CAPACITANCE VALUE[1] (pF) | TOLERANCE | SIZE (see Table 1) | MARKING CODE | | SUFFIX OF CATALOGUE NUMBER (see Table 2) |
|---|---|---|---|---|---|
| | | | VALUE | VOLTAGE[4] (V) | |
| 0.82 | ±0.25 pF | I[2] | p82 | 500 | 09827 |
| 1.0 | ±0.25 pF | I[3] | 1p0 | 500 | 09108 |
| 1.2 | ±0.25 pF | I[3] | 1p2 | 500 | 09128 |
| 1.5 | ±0.25 pF | I | 1p5 | 500 | 09158 |
| 1.8 | ±0.25 pF | I | 1p8 | 500 | 09188 |
| 2.2 | ±0.25 pF | I | 2p2 | 500 | 09228 |
| 2.7 | ±0.25 pF | I | 2p7 | 500 | 09278 |
| 3.3 | ±0.25 pF | I | 3p3 | 500 | 09338 |
| 3.9 | ±0.25 pF | I | 3p9 | 500 | 09398 |
| 4.7 | ±0.25 pF | I | 4p7 | 500 | 09478 |
| 5.6 | ±0.25 pF | I | 5p6 | 500 | 09568 |
| 6.8 | ±0.25 pF | I | 6p8 | 500 | 09688 |
| 8.2 | ±0.25 pF | I | 8p2 | 500 | 09828 |
| 10 | ±2% | I | 10p | 500 | 10109 |
| 12 | ±2% | I | 12p | 500 | 10129 |
| 15 | ±2% | IIA | 15p | 500 | 10159 |
| 18 | ±2% | IIA | 18p | 500 | 10189 |
| 22 | ±2% | IIA | 22p | 500 | 10229 |
| 27 | ±2% | IIB | 27p | 500 | 10279 |
| 33 | ±2% | IIB | 33p | 500 | 10339 |
| 39 | ±2% | IIB | 39p | 500 | 10399 |
| 47 | ±2% | III | 47p | 500 | 10479 |
| 56 | ±2% | III | 56p | 500 | 10569 |
| 68 | ±2% | IV | 68p | 500 | 10689 |
| 82 | ±2% | IV | 82p | 500 | 10829 |
| 100 | ±2% | IV | n10 | 500 | 10101 |
| 120 | ±2% | V | n12 | 500 | 10121 |
| 150 | ±2% | V | n15 | 500 | 10151 |

**Notes**

1. Other capacitance values and tolerances are available on request.
2. Maximum thickness 2.7 mm.
3. Maximum thickness 2.5 mm.
4. The voltage code may be marked on the front or rear side of the capacitor.

**Table 7** Conditions for Table 8; capacitors with temperature coefficient **N150 (P2G)**

| DESCRIPTION | VALUE |
|---|---|
| Capacitance range | 2.2 to 150 pF (E12 series) |
| Temperature coefficient of the capacitance $\left(\frac{\Delta C}{C\Delta T}\right)$ | $-150 \times 10^{-6}$/K |
| Tolerance on the temperature coefficient | $\pm 30 \times 10^{-6}$/K |
| Marking colour of the temperature coefficient | orange |
| Climatic category (IEC 68) | 55/085/21 |

**Table 8** **Preferred** capacitance range, temperature coefficient **N150 (P2G)**

| CAPACITANCE VALUE[1] (pF) | TOLERANCE | SIZE (see Table 1) | MARKING CODE | | SUFFIX OF CATALOGUE NUMBER (see Table 2) |
|---|---|---|---|---|---|
| | | | VALUE | VOLTAGE[3] (V) | |
| 2.2 | ±0.25 pF | I[2] | 2p2 | 500 | 33228 |
| 2.7 | ±0.25 pF | I[2] | 2p7 | 500 | 33278 |
| 3.3 | ±0.25 pF | I | 3p3 | 500 | 33338 |
| 3.9 | ±0.25 pF | I | 3p9 | 500 | 33398 |
| 4.7 | ±0.25 pF | I | 4p7 | 500 | 33478 |
| 5.6 | ±0.25 pF | I | 5p6 | 500 | 33568 |
| 6.8 | ±0.25 pF | I | 6p8 | 500 | 33688 |
| 8.2 | ±0.25 pF | I | 8p2 | 500 | 33828 |
| 10 | ±2% | I | 10p | 500 | 34109 |
| 12 | ±2% | I | 12p | 500 | 34129 |
| 15 | ±2% | IIA | 15p | 500 | 34159 |
| 18 | ±2% | IIA | 18p | 500 | 34189 |
| 22 | ±2% | IIA | 22p | 500 | 34229 |
| 27 | ±2% | IIB | 27p | 500 | 34279 |
| 33 | ±2% | IIB | 33p | 500 | 34339 |
| 39 | ±2% | IIB | 39p | 500 | 34399 |
| 47 | ±2% | III | 47p | 500 | 34479 |
| 56 | ±2% | III | 56p | 500 | 34569 |
| 68 | ±2% | IV | 68p | 500 | 34689 |
| 82 | ±2% | IV | 82p | 500 | 34829 |
| 100 | ±2% | IV | n10 | 500 | 34101 |
| 120 | ±2% | V | n12 | 500 | 34121 |
| 150 | ±2% | V | n15 | 500 | 34151 |

**Notes**

1. Other capacitance values and tolerances are available on request.
2. Maximum thickness 2.5 mm.
3. The voltage code may be marked on the front or rear side of the capacitor.

**Table 9** Conditions for Table 10; capacitors with temperature coefficient **N750 (U2J)**

| DESCRIPTION | VALUE |
|---|---|
| Capacitance range | 1.8 to 120 pF (E12 series) |
| Temperature coefficient of the capacitance $\left(\frac{\Delta C}{C\Delta T}\right)$ | $-750 \times 10^{-6}$/K |
| Tolerance on the temperature coefficient | $\pm 120 \times 10^{-6}$/K |
| Marking colour of the temperature coefficient | violet |
| Climatic category (IEC 68) | 55/085/21 |

**Table 10 Preferred** capacitance range, temperature coefficient **N750 (U2J)**

| CAPACITANCE VALUE[1] (pF) | TOLERANCE | SIZE (see Table 1) | MARKING CODE | | SUFFIX OF CATALOGUE NUMBER (see Table 2) |
|---|---|---|---|---|---|
| | | | VALUE | VOLTAGE[5] (V) | |
| 1.8 | ±0.25 pF | I[2] | 1p8 | 500 | 57188 |
| 2.2 | ±0.25 pF | I[3] | 2p2 | 500 | 57228 |
| 2.7 | ±0.25 pF | I | 2p7 | 500 | 57278 |
| 3.3 | ±0.25 pF | I | 3p3 | 500 | 57338 |
| 3.9 | ±0.25 pF | I | 3p9 | 500 | 57398 |
| 4.7 | ±0.25 pF | I[4] | 4p7 | 500 | 57478 |
| 5.6 | ±0.25 pF | I | 5p6 | 500 | 57568 |
| 6.8 | ±0.25 pF | I | 6p8 | 500 | 57688 |
| 8.2 | ±0.25 pF | I | 8p2 | 500 | 57828 |
| 10 | ±2% | I | 10p | 500 | 58109 |
| 12 | ±2% | I | 12p | 500 | 58129 |
| 15 | ±2% | I | 15p | 500 | 58159 |
| 18 | ±2% | IIA | 18p | 500 | 58189 |
| 22 | ±2% | IIA | 22p | 500 | 58229 |
| 27 | ±2% | IIB | 27p | 500 | 58279 |
| 33 | ±2% | IIB | 33p | 500 | 58339 |
| 39 | ±2% | IIB | 39p | 500 | 58399 |
| 47 | ±2% | III | 47p | 500 | 58479 |
| 56 | ±2% | III | 56p | 500 | 58569 |
| 68 | ±2% | IV | 68p | 500 | 58689 |
| 82 | ±2% | IV | 82p | 500 | 58829 |
| 100 | ±2% | IV | n10 | 500 | 58101 |
| 120 | ±2% | V | n12 | 500 | 58121 |
| 150 | ±2% | V | n15 | 500 | 58151 |

**Notes**

1. Other capacitance values and tolerances are available on request.
2. Maximum thickness 3.0 mm.
3. Maximum thickness 2.5 mm.
4. Maximum thickness 2.7 mm.
5. The voltage code may be marked on the front or rear side of the capacitor.

**Table 11** Conditions for Table 12; capacitors with temperature coefficient **N1500 (P3K)**

| DESCRIPTION | VALUE |
|---|---|
| Capacitance range | 8.2 to 270 pF (E12 series) |
| Temperature coefficient of the capacitance $\left(\frac{\Delta C}{C \Delta T}\right)$ | $-1500 \times 10^{-6}$/K |
| Tolerance on the temperature coefficient | $(-0 + 500) \times 10^{-6}$/K |
| Marking colour of the temperature coefficient | orange/orange |
| Climatic category (IEC 68) | 55/150/56 |

**Table 12 Preferred** capacitance range, temperature coefficient **N1500 (P3K)**

| CAPACITANCE VALUE[1] (pF) | TOLERANCE | SIZE (see Table 1) | MARKING CODE | | SUFFIX OF CATALOGUE NUMBER (see Table 2) |
|---|---|---|---|---|---|
| | | | VALUE | VOLTAGE[4] (V) | |
| 8.2 | ±0.25 pF | I[2] | 8p2 | 500 | 69828 |
| 10 | ±2% | I[3] | 10p | 500 | 70109 |
| 12 | ±2% | I[3] | 12p | 500 | 70129 |
| 15 | ±2% | I | 15p | 500 | 70159 |
| 18 | ±2% | I | 18p | 500 | 70189 |
| 22 | ±2% | I | 22p | 500 | 70229 |
| 27 | ±2% | I | 27p | 500 | 70279 |
| 33 | ±2% | IIA | 33p | 500 | 70339 |
| 39 | ±2% | IIA | 39p | 500 | 70399 |
| 47 | ±2% | IIA | 47p | 500 | 70479 |
| 56 | ±2% | IIB | 56p | 500 | 70569 |
| 68 | ±2% | IIB | 68p | 500 | 70689 |
| 82 | ±2% | IIB | 82p | 500 | 70829 |
| 100 | ±2% | III | n10 | 500 | 70101 |
| 120 | ±2% | III | n12 | 500 | 70121 |
| 150 | ±2% | IV | n15 | 500 | 70151 |
| 180 | ±2% | IV | n18 | 500 | 70181 |
| 220 | ±2% | IV | n22 | 500 | 70221 |
| 270 | ±2% | V | n27 | 500 | 70271 |
| 330 | ±2% | V | n33 | 500 | 70331 |

**Notes**

1. Other capacitance values and tolerances are available on request.
2. Maximum thickness 3.0 mm.
3. Maximum thickness 2.5 mm.
4. The voltage code may be marked on the front or rear side of the capacitor.

## ELECTRICAL CHARACTERISTICS

The capacitors meet the essential requirements of *"IEC 384-8"*. Unless stated otherwise all electrical values apply at an ambient temperature of 20 ±1 °C, an atmospheric pressure of 86 to 106 kPa and a relative humidity of 63 to 67%.

| DESCRIPTION | VALUE |
|---|---|
| Capacitance values (note 1) measured at 1 MHz, ≤5 V | see Tables 4 to 12 |
| Rated DC voltage | 500 V |
| DC test voltage; duration 1 minute | 1250 V |
| DC test voltage of coating; duration 1 minute | 1250 V |
| Insulation resistance at 500 V (DC) after 1 minute | >10000 MΩ |
| Tan δ (note 1) measured at 1 MHz, ≤5 V: | |
| $C \leq 50$ pF | $\leq 15 \left(\frac{15}{C} + 0.7\right) \times 10^{-4}$ |
| $C > 50$ pF | $\leq 15 \times 10^{-4}$ |
| Category temperature range | −55 to +85 °C (N150, N750); −55 to +150 °C (P100, NP0, N1500) |
| Storage temperature range | −55 to +85 °C |

**Note**

1. Including 2 mm per connecting lead.

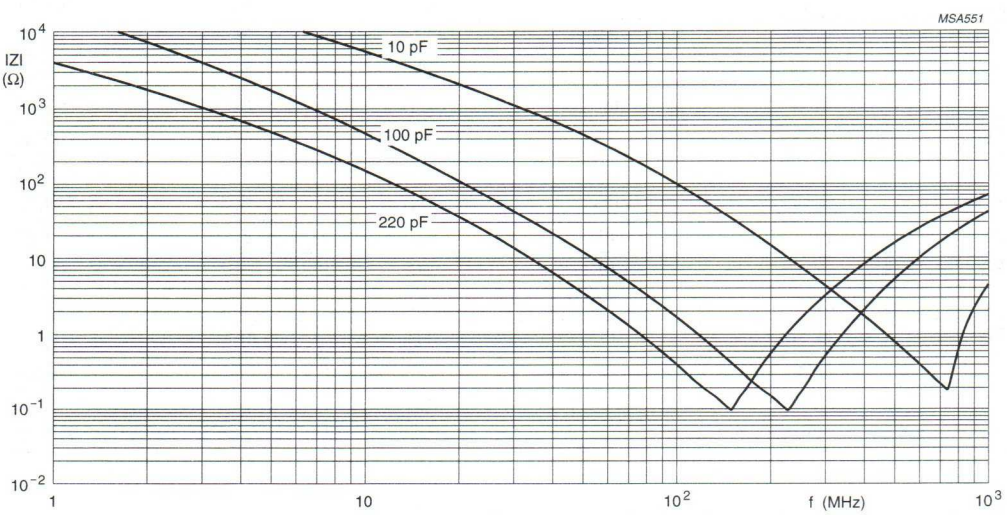


Fig.4 Typical impedance |Z| as a function of frequency.

# Miniature ceramic plate capacitors

# Class 2, 500 V (DC) (flanged types)

## FEATURES

- Professional circuits
- Coupling and decoupling
- Space saving
- High reliability
- High temperature circuits.

## APPLICATIONS

In electronic circuits where non-linear change of capacitance with temperature is permissible and low losses are not essential, e.g. coupling and decoupling. Because of their small size, the capacitors are ideal for circuitry with high component density.

## DESCRIPTION

The capacitors consist of a thin rectangular ceramic plate, both sides of which are metallized. The tinned connecting leads are secured using a high melting point solder. The capacitors are encapsulated in epoxy lacquer, which is resistant to all commonly used cleaning solvents. They have small dimensions and narrow tolerances on the lead spacing. The leads are provided with a flange. The flange guarantees that the leads are free of lacquer, and its shape allows soldering gasses to escape freely, ensuring excellent solderability. This makes the capacitors suitable for both hand-mounting and automatic insertion.

## QUICK REFERENCE DATA

| DESCRIPTION | VALUE |
|---|---|
| Capacitance range (E12 series) | 100 to 4700 pF |
| Dielectric material | K2000 |
| Rated DC voltage | 500 V |
| Tolerance on capacitance | ±10% |
| Sectional specification | IEC 384-9 (2C2 and 2D1)<br>EIA (X5S/X8U) |
| Climatic category (IEC 68) | 55/150/56 |

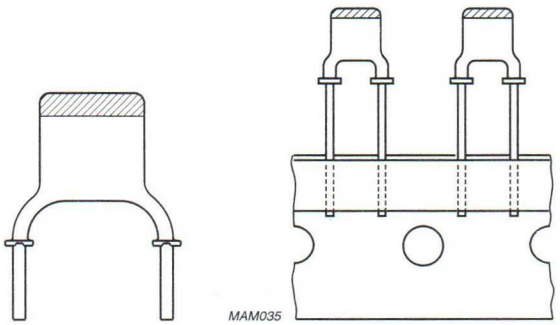


Fig.1 Outlines.

## MECHANICAL DATA

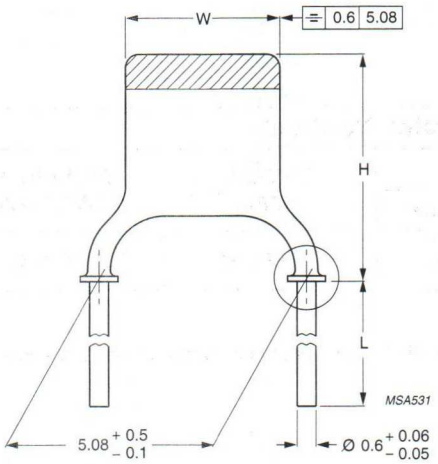


Dimensions in mm.
For dimensions H, L and W see Tables 1 and 2.

Fig.2 Component outline.

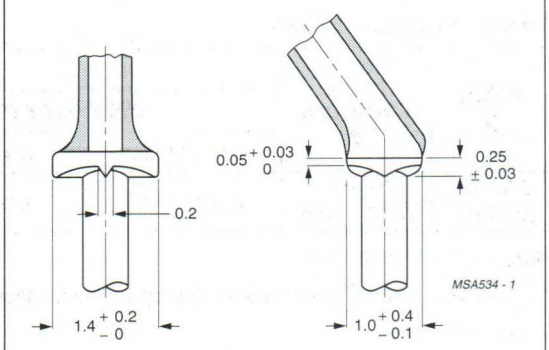


Dimensions in mm.

Fig.3 Detail of flange.

### Marking

The body of the capacitors is tan coloured. The temperature dependence is indicated by a yellow coloured cap. Capacitance value and voltage are indicated by a marking code in a contrasting colour on the body. Refer to Table 3 for marking codes.

### Mounting

When bending, cutting or flattening, the leads should be relieved of the applied load by supporting them at the capacitor body.

Soldering conditions:

max. 265 °C, max. 10 s.

The capacitors are suitable for mounting on printed-circuit boards (hand-mounting or automatic insertion).

### Physical dimensions

**Table 1** Capacitor dimensions and mass

| SIZE(1) | W(2) (mm) | H(2) (mm) | MASS (g) |
|---|---|---|---|
| I | 3.6 (–1.1) | 6.3 (–1.8) | ≈0.14 |
| IIA | 3.9 (–1.4) | 6.7 (–2.0) | ≈0.15 |
| IIB | 4.5 (–1.8) | 7.3 (–2.4) | ≈0.15 |
| III | 5.3 (–1.8) | 8.1 (–2.6) | ≈0.17 |
| IV | 6.2 (–2.0) | 9.0 (–2.7) | ≈0.20 |
| V | 6.2 (–2.0) | 11.2 (–3.1) | ≈0.23 |

### Notes

1. Unless indicated in Table 3 the thickness of the capacitors does not exceed 2.3 mm.
2. Tolerances are given between parentheses.

## PACKAGING

For details refer to this handbook, Chapter *"Miniature ceramic plate capacitors"*, Section *"General data"*.

## ORDERING INFORMATION

**Table 2** Catalogue numbers

| PITCH P | LEAD DIAMETER d | CATALOGUE NUMBERS(1) | | | |
|---|---|---|---|---|---|
| | | BULK PACKED | | ON TAPE (REEL) | ON TAPE(2) (AMMOPACK) |
| | | L ≥ 13 mm | L = 4 ±0.5 mm | | |
| 5.08 mm (0.2 inch) | 0.6 mm (0.024 inch) | 2222 655 09... | 2222 655 19... | 2222 655 53... | 2222 655 63... |

**Notes**

1. Catalogue numbers to be completed by adding the last 3-digit suffix for required capacitance value, see Table 3.
2. $H_0$ = 18.25 mm.

**Table 3** **Preferred** range of values

| CAPACITANCE VALUE (pF) | SIZE (see Table 1) | MARKING CODE | | SUFFIX OF CATALOGUE NUMBERS (see Table 2) |
|---|---|---|---|---|
| | | VALUE | VOLTAGE[3] (V) | |
| 100 | I[1] | n10 | 500 | 101 |
| 120 | I[2] | n12 | 500 | 121 |
| 150 | I | n15 | 500 | 151 |
| 180 | I | n18 | 500 | 181 |
| 220 | I | n22 | 500 | 221 |
| 270 | I | n27 | 500 | 271 |
| 330 | I | n33 | 500 | 331 |
| 390 | IIA | n39 | 500 | 391 |
| 470 | IIA | n47 | 500 | 471 |
| 560 | IIA | n56 | 500 | 561 |
| 680 | IIB | n68 | 500 | 681 |
| 820 | IIB | n82 | 500 | 821 |
| 1000 | IIB | 1n0 | 500 | 102 |
| 1200 | III | 1n2 | 500 | 122 |
| 1500 | III | 1n5 | 500 | 152 |
| 1800 | III | 1n8 | 500 | 182 |
| 2200 | IV | 2n2 | 500 | 222 |
| 2700 | IV | 2n7 | 500 | 272 |
| 3300 | V | 3n3 | 500 | 332 |
| 3900 | V | 3n9 | 500 | 392 |
| 4700 | V | 4n7 | 500 | 472 |

**Notes**

1. Maximum thickness 2.7 mm.
2. Maximum thickness 2.5 mm.
3. The voltage code may be marked on the front or rear side of the capacitor.

## ELECTRICAL CHARACTERISTICS

The capacitors meet the essential requirements of *"IEC 384-9"*. Unless stated otherwise all electrical values apply at an ambient temperature of 20 ±1 °C, an atmospheric pressure of 86 to 106 kPa and a relative humidity of 63 to 67%.

| DESCRIPTION | VALUE |
|---|---|
| Capacitance values measured at 1 kHz, 1 V | 100 to 4700 pF (E12 series) |
| Tolerance on the capacitance, after 1000 hours | ±10% |
| Dielectric material | K2000 |
| Rated DC voltage | 500 V |
| DC test voltage; duration 1 minute | 1 250 V |
| DC test voltage of coating; duration 1 minute | 1 250 V |
| Insulation resistance at 500 V (DC) after 1 minute | >4000 MΩ |
| Tan δ measured at 1 kHz, 1 V | <3.5% |
| Category temperature range | −55 to +85 °C (2C2) and −55 to +150 °C (2D1) |
| Storage temperature range | −55 to +85 °C |
| Capacitance change as a function of temperature | see Fig.4 |
| Capacitance change as a function of frequency | see Fig.5 |
| Climatic category (IEC 68) | 55/150/56 |
| Ageing | typical 1.5% per time decade |

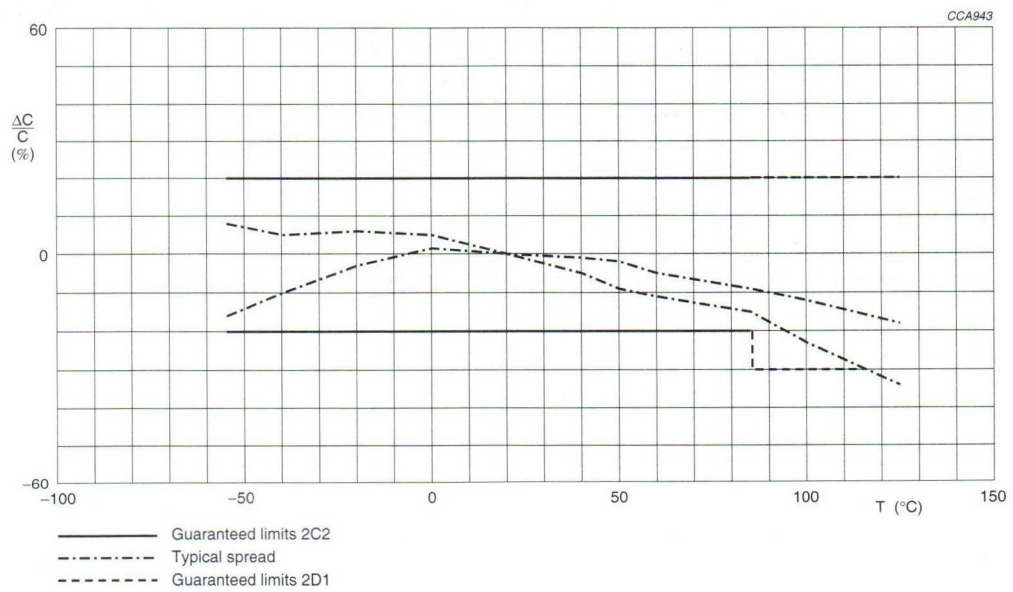


Fig.4 Typical capacitance change with respect to the capacitance at 20 °C as a function of temperature.

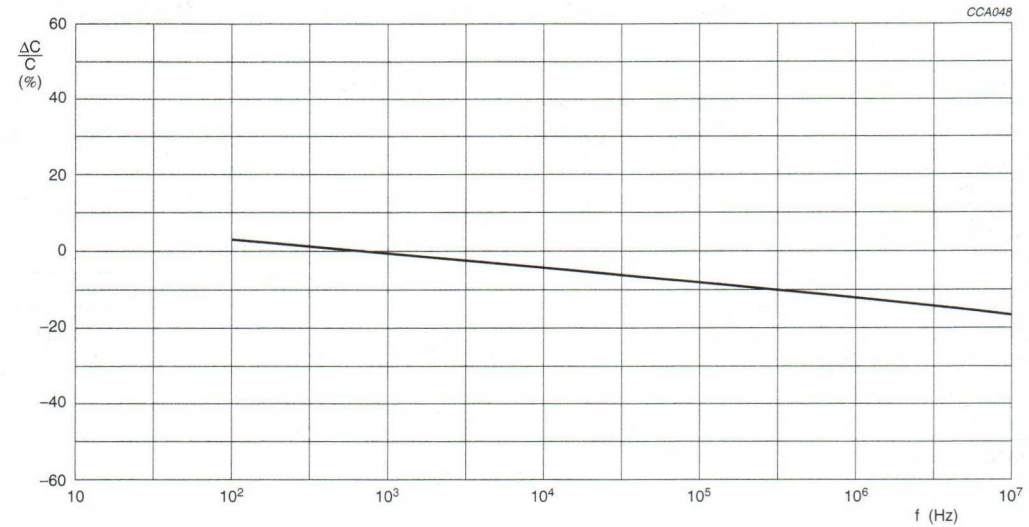


U = 1 V (DC).

Fig.5 Typical capacitance change with respect to the capacitance at 1 kHz as a function of frequency.

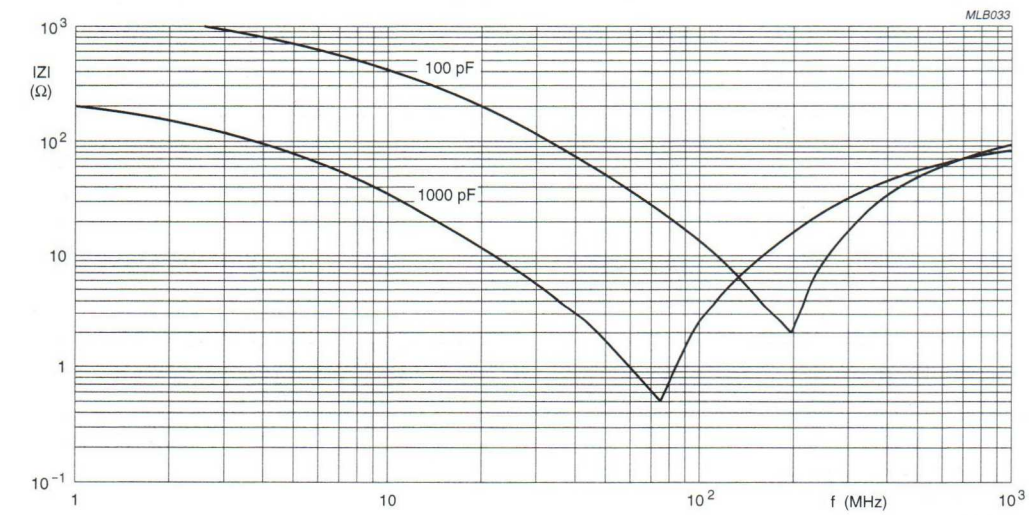


Fig.6 Typical impedance |Z| as a function of frequency.

# Miniature ceramic plate capacitors

# Class 1, 1000 V (DC) (flanged types)

## FEATURES

- High reliability
- High-frequency circuits
- High stability
- Space saving
- High temperature circuits
- Professional circuits.

## APPLICATIONS

In a great variety of electronic circuits, e.g. in filters and tuning circuits where stability and low losses are a requirement. Because of their small size the capacitors are suitable for use in circuitry with high component density such as SMPS.

## DESCRIPTION

The capacitors consist of a thin rectangular ceramic plate, both sides of which are metallized, and tinned connecting leads are secured using a high melting point solder. The capacitors are encapsulated in epoxy lacquer, which is resistant to all commonly used cleaning solvents. They have small dimensions and narrow tolerances on the lead spacing. The leads are provided with a flange, which guarantees that the leads are free of lacquer, and its shape allows soldering gasses to escape freely, ensuring excellent solderability. This makes the capacitors suitable for both hand-mounting and automatic insertion. The electrical properties are characterized by low losses, a narrow tolerance on capacitance (±0.25 pF or 5%), high stability and, owing to the absence of silver, an extremely good DC behaviour.

## QUICK REFERENCE DATA

| DESCRIPTION | VALUE |
|---|---|
| Capacitance range (E12 series) | 0.47 to 150 pF |
| Rated DC voltage | 1000 V |
| Tolerance on capacitance | ±5% or ±0.25 pF |
| Temperature coefficient | SL (+150 to $-1500 \times 10^{-6}$/K) |
| Sectional specification | IEC 384-8 |
| Climatic category (IEC 68) | 55/150/56 |

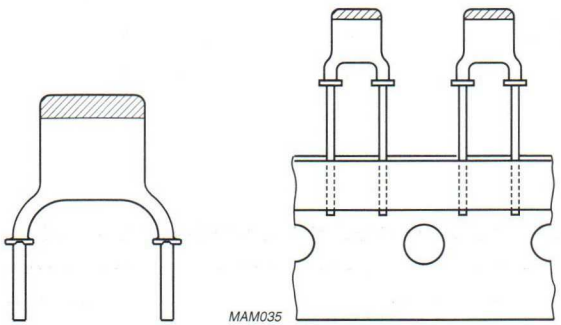


Fig.1 Outlines.

## MECHANICAL DATA

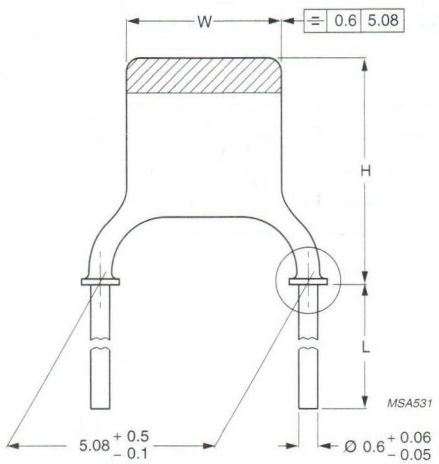


Dimensions in mm.
For dimensions H, L and W see Tables 1 and 2.

Fig.2 Component outline.

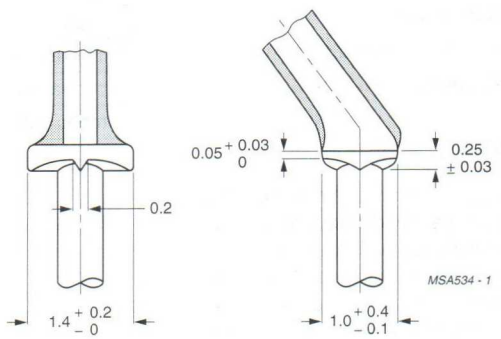


Dimensions in mm.

Fig.3 Detail of flange.

### Marking

The body of the capacitors is coloured tan. Capacitance value and voltage are indicated by a marking code in a contrasting colour on the body. Refer to Tables 3 and 4 for colour and marking codes.

### Mounting

When bending, cutting or flattening, the leads should be relieved of the applied load by supporting them at the capacitor body.

Soldering conditions:

max. 265 °C, max. 10 s.

The capacitors are suitable for mounting on printed-circuit boards (hand-mounting or automatic insertion).

### Physical dimensions

**Table 1** Capacitor dimensions and mass

| SIZE(1) | W(2) (mm) | H(2) (mm) | MASS (g) |
|---|---|---|---|
| I | 3.6 (–1.1) | 6.3 (–1.8) | ≈0.14 |
| IIA | 3.9 (–1.4) | 6.7 (–2.0) | ≈0.15 |
| IIB | 4.5 (–1.8) | 7.3 (–2.4) | ≈0.15 |
| III | 5.3 (–1.8) | 8.1 (–2.6) | ≈0.17 |
| IV | 6.2 (–2.0) | 9.0 (–2.7) | ≈0.20 |
| V | 6.2 (–2.0) | 11.2 (–3.1) | ≈0.23 |

**Notes**

1. Unless indicated in Table 4, the thickness of the capacitors does not exceed 3 mm.
2. Tolerances are given between parentheses.

## PACKAGING

For details refer to this handbook, Chapter *"Miniature ceramic plate capacitors"*, Section *"General data"*.

## ORDERING INFORMATION

**Table 2** Catalogue numbers

| PITCH P | LEAD DIAMETER d | CATALOGUE NUMBERS(1) | | | |
|---|---|---|---|---|---|
| | | BULK PACKED | | ON TAPE (REEL) | ON TAPE(2) (AMMOPACK) |
| | | L ≥ 13 mm | L = 4 ±0.5 mm | | |
| 5.08 mm (0.2 inch) | 0.6 mm (0.024 inch) | 2222 694 09... | 2222 694 19... | 2222 694 53... | 2222 694 63... |

**Notes**

1. Catalogue numbers to be completed by adding the last 3-digit suffix for required capacitance value, see Table 4.
2. $H_0$ = 18.25 mm.

**Table 3** Conditions for Table 4; capacitors with temperature coefficient **SL**

| DESCRIPTION | VALUE |
|---|---|
| Capacitance range | 0.47 to 150 pF (E12 series) |
| Temperature coefficient of the capacitance $\left(\frac{\Delta C}{C \Delta T}\right)$ | $+150 \times 10^{-6}$/K to $-1500 \times 10^{-6}$/K |
| Marking colour of the temperature coefficient | none |

**Table 4** **Preferred** capacitance range, temperature coefficient **SL**

| CAPACITANCE VALUE[1] (pF) | TOLERANCE | SIZE (see Table 1) | MARKING CODE | | SUFFIX OF CATALOGUE NUMBER (see Table 2) |
|---|---|---|---|---|---|
| | | | VALUE | VOLTAGE[2] | |
| 0.47 | ±0.25 pF | I | p47 | 1 kV | 477 |
| 0.56 | ±0.25 pF | I | p56 | 1 kV | 567 |
| 0.68 | ±0.25 pF | I | p68 | 1 kV | 687 |
| 0.82 | ±0.25 pF | I | p82 | 1 kV | 827 |
| 1.0 | ±0.25 pF | I | 1p0 | 1 kV | 108 |
| 1.2 | ±0.25 pF | I | 1p2 | 1 kV | 128 |
| 1.5 | ±0.25 pF | I | 1p5 | 1 kV | 158 |
| 1.8 | ±0.25 pF | I | 1p8 | 1 kV | 188 |
| 2.2 | ±0.25 pF | I | 2p2 | 1 kV | 228 |
| 2.7 | ±0.25 pF | I | 2p7 | 1 kV | 278 |
| 3.3 | ±0.25 pF | I | 3p3 | 1 kV | 338 |
| 3.9 | ±0.25 pF | I | 3p9 | 1 kV | 398 |
| 4.7 | ±0.25 pF | I | 4p7 | 1 kV | 478 |
| 5.6 | ±0.25 pF | I | 5p6 | 1 kV | 568 |
| 6.8 | ±0.25 pF | I | 6p8 | 1 kV | 688 |
| 8.2 | ±0.25 pF | I | 8p2 | 1 kV | 828 |
| 10 | ±5% | I | 10p | 1 kV | 109 |
| 12 | ±5% | I | 12p | 1 kV | 129 |
| 15 | ±5% | I | 15p | 1 kV | 159 |
| 18 | ±5% | IIA | 18p | 1 kV | 189 |
| 22 | ±5% | IIA | 22p | 1 kV | 229 |
| 27 | ±5% | IIB | 27p | 1 kV | 279 |
| 33 | ±5% | IIB | 33p | 1 kV | 339 |
| 39 | ±5% | IIB | 39p | 1 kV | 399 |
| 47 | ±5% | III | 47p | 1 kV | 479 |
| 56 | ±5% | III | 56p | 1 kV | 569 |
| 68 | ±5% | III | 68p | 1 kV | 689 |
| 82 | ±5% | IV | 82p | 1 kV | 829 |
| 100 | ±5% | IV | n10 | 1 kV | 101 |
| 120 | ±5% | V | n12 | 1 kV | 121 |
| 150 | ±5% | V | n15 | 1 kV | 151 |

**Notes**

1. Other capacitance values and tolerances are available on request.
2. The voltage code may be marked on the front or rear side of the capacitor.

## ELECTRICAL CHARACTERISTICS

The capacitors meet the essential requirements of *"IEC 384-8"*. Unless stated otherwise all electrical values apply at an ambient temperature of 20 ±1 °C, an atmospheric pressure of 86 to 106 kPa and a relative humidity of 63 to 67%.

| DESCRIPTION | VALUE |
|---|---|
| Capacitance values (note 1) measured at 1 MHz, ≤5 V | see Table 4 |
| Rated DC voltage | 1000 V |
| DC test voltage; duration 1 minute | 2000 V |
| DC test voltage of coating; duration 1 minute | 2000 V |
| Insulation resistance at 500 V (DC) after 1 minute | >10 000 MΩ |
| Tan δ (note 1) measured at 1 MHz, ≤5 V: | |
| $C \leq 50$ pF | $\leq 15 \left( \frac{15}{C} + 0.7 \right) \times 10^{-4}$ |
| $C > 50$ pF | $\leq 15 \times 10^{-4}$ |
| Category temperature range | −55 to +150 °C |
| Storage temperature range | −55 to +85 °C |
| Climatic category (IEC 68) | 55/150/56 |

**Note**

1. Including 2 mm per connecting lead.

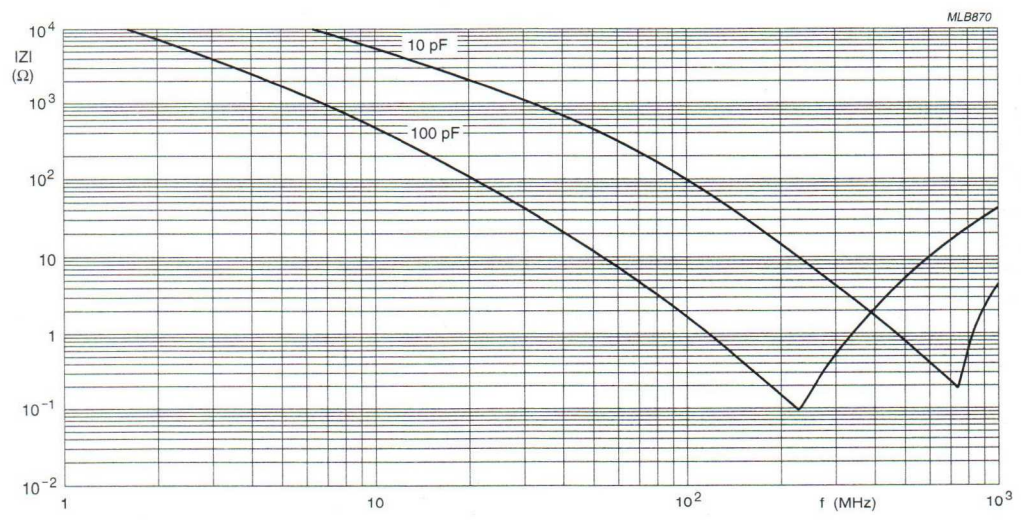


Fig.4 Typical impedance |Z| as a function of frequency.

# Miniature ceramic plate capacitors

# Class 2, 1000 V (DC) (2C2 and 2D1 flanged types)

## FEATURES

- High reliability
- Coupling and decoupling
- Space saving
- High temperature circuits
- Professional circuits.

## APPLICATIONS

In electronic circuits where non-linear change of capacitance with temperature is permissible and low losses are not essential, e.g. coupling and decoupling. Because of their small size, the capacitors are ideal for circuitry with high component density.

## DESCRIPTION

The capacitors consist of a thin rectangular ceramic plate, both sides of which are metallized. The tinned connecting leads are secured using a high melting point solder. The capacitors are encapsulated in epoxy lacquer, which is resistant to all commonly used cleaning solvents. They have small dimensions and narrow tolerances on the lead spacing. The leads are provided with a flange. The flange guarantees that the leads are free of lacquer, and its shape allows soldering gasses to escape freely, ensuring excellent solderability. This makes the capacitors suitable for both hand-mounting and automatic insertion.

## QUICK REFERENCE DATA

| DESCRIPTION | VALUE |
|---|---|
| Capacitance range (E12 series) | 100 to 1800 pF |
| Dielectric material | K2000 |
| Rated DC voltage | 1000 V |
| Tolerance on capacitance | ±10% |
| Sectional specification | IEC 384-9 (2C2 and 2D1); EIA (X5S/X8U) |
| Climatic category (IEC 68) | 55/150/56 |

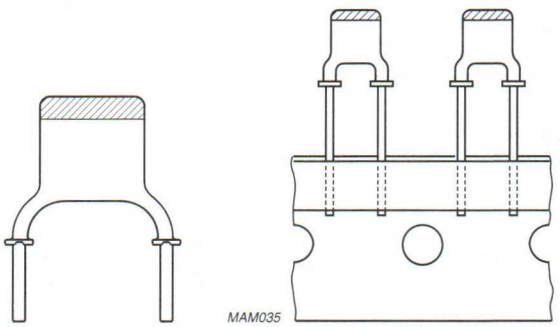


Fig.1 Outlines.

## MECHANICAL DATA

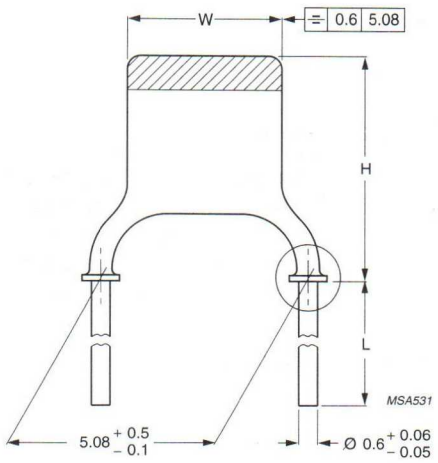


Dimensions in mm.
For dimensions H, L and W see Tables 1 and 2.

Fig.2 Component outline.

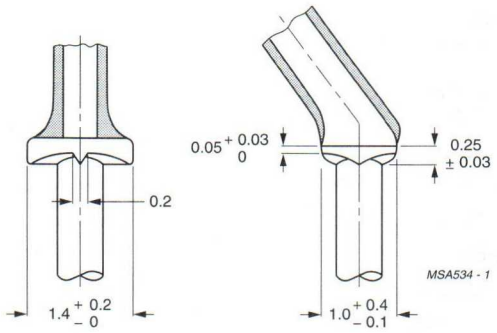


Dimensions in mm.

Fig.3 Detail of flange.

### Marking

The body of the capacitors is tan coloured. The temperature dependency is indicated by a yellow coloured cap. Capacitance value and voltage are indicated by a marking code on the body. Refer to Table 3 for marking codes.

### Mounting

When bending, cutting or flattening, the leads should be relieved of the applied load by supporting them at the capacitor body.

Soldering conditions:

max. 265 °C, max. 10 s.

The capacitors are suitable for mounting on printed-circuit boards (hand-mounting or automatic insertion).

### Physical dimensions

**Table 1** Capacitor dimensions and mass

| SIZE(1) | W(2) (mm) | H(2) (mm) | MASS (g) |
|---|---|---|---|
| I | 3.6 (–1.1) | 6.3 (–1.8) | ≈0.14 |
| IIA | 3.9 (–1.4) | 6.7 (–2.0) | ≈0.15 |
| IIB | 4.5 (–1.8) | 7.3 (–2.4) | ≈0.15 |
| III | 5.3 (–1.8) | 8.1 (–2.6) | ≈0.17 |
| IV | 6.2 (–2.0) | 9.0 (–2.7) | ≈0.20 |
| V | 6.2 (–2.0) | 11.2 (–3.1) | ≈0.23 |

### Notes

1. Unless indicated in Table 3, the thickness of the capacitors does not exceed 3.0 mm.
2. Tolerances are given between parentheses.

## PACKAGING

For details refer to this handbook, Chapter *"Miniature ceramic plate capacitors"*, Section *"General data"*.

## ORDERING INFORMATION

**Table 2** Catalogue numbers

| PITCH P | LEAD DIAMETER d | CATALOGUE NUMBERS(1) | | | |
|---|---|---|---|---|---|
| | | BULK PACKED | | ON TAPE(2) (REEL) | ON TAPE(2) (AMMOPACK) |
| | | L ≥ 13 mm | L = 4 ±0.5 mm | | |
| 5.08 mm (0.2 inch) | 0.6 mm (0.024 inch) | 2222 693 09... | 2222 693 19... | 2222 693 53... | 2222 693 63... |

**Notes**

1. Catalogue numbers to be completed by adding the 3-digit suffix for required capacitance value, see Table 3.
2. $H_0$ = 18.25 mm.

**Table 3** **Preferred** range of values

| CAPACITANCE VALUE (pF) | SIZE (see Table 1) | MARKING CODE | | SUFFIX OF CATALOGUE NUMBERS (see Table 2) |
|---|---|---|---|---|
| | | VALUE | VOLTAGE(1) | |
| 100 | I | n10 | 1 kV | 101 |
| 120 | I | n12 | 1 kV | 121 |
| 150 | I | n15 | 1 kV | 151 |
| 180 | IIA | n18 | 1 kV | 181 |
| 220 | IIA | n22 | 1 kV | 221 |
| 270 | IIA | n27 | 1 kV | 271 |
| 330 | IIB | n33 | 1 kV | 331 |
| 390 | IIB | n39 | 1 kV | 391 |
| 470 | IIB | n47 | 1 kV | 471 |
| 560 | III | n56 | 1 kV | 561 |
| 680 | III | n68 | 1 kV | 681 |
| 820 | IV | n82 | 1 kV | 821 |
| 1000 | IV | 1n0 | 1 kV | 102 |
| 1200 | IV | 1n2 | 1 kV | 122 |
| 1500 | V | 1n5 | 1 kV | 152 |
| 1800 | V | 1n8 | 1 kV | 182 |

**Note**

1. The voltage code may be marked on the front or rear side of the capacitor.

## ELECTRICAL CHARACTERISTICS

The capacitors meet the essential requirements of *"IEC 384-9"*. Unless stated otherwise all electrical values apply at an ambient temperature of 20 ±1 °C, an atmospheric pressure of 86 to 106 kPa and a relative humidity of 63 to 67%.

| DESCRIPTION | VALUE |
|---|---|
| Capacitance values measured at 1 kHz, 1 V | see Table 3 |
| Tolerance on the capacitance, after 1000 hours | ±10% |
| Rated DC voltage | 1000 V |
| DC test voltage; duration 1 minute | 2000 V |
| DC test voltage of coating; duration 1 minute | 2000 V |
| Insulation resistance at 500 V (DC) after 1 minute | >6 000 MΩ |
| Tan δ measured at 1 kHz, 1 V | <3.5% |
| Category temperature range | −55 to +85 °C (2C2) and −55 to +150 °C (2D1) |
| Storage temperature range | −55 to +85 °C |
| Capacitance change as a function of temperature | see Fig.4 |
| Capacitance change as a function of frequency | see Fig.5 |
| Climatic category (IEC 68) | 55/150/56 |
| Ageing | typical 1.5% per time decade |

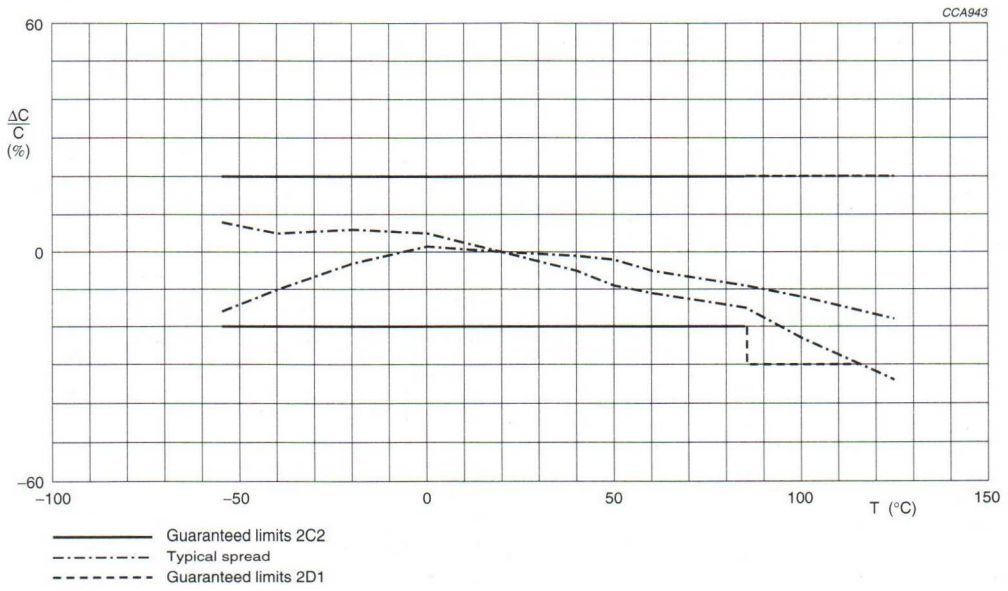


Fig.4 Typical capacitance change with respect to the capacitance at 20 °C as a function of temperature.

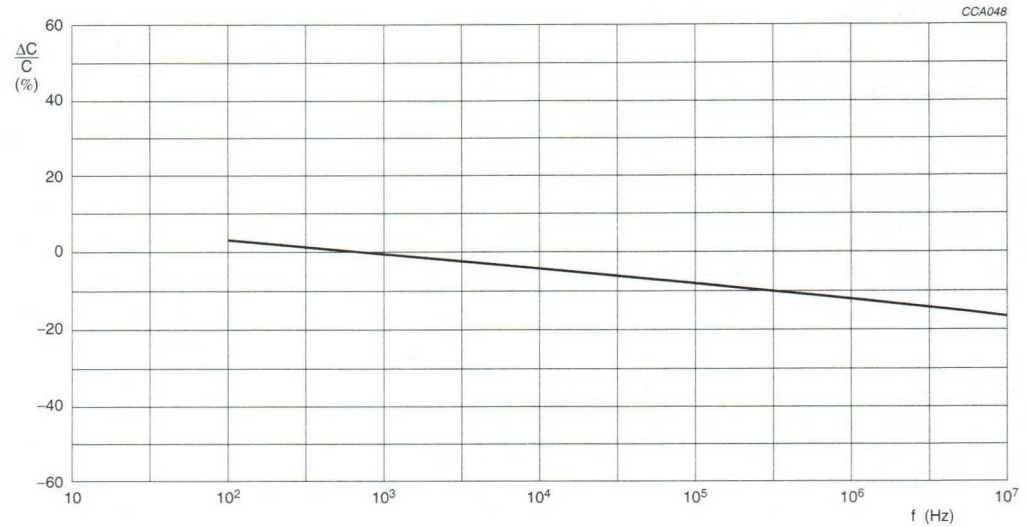


U = 1 V.

Fig.5 Typical capacitance change with respect to the capacitance at 1 kHz as a function of frequency.

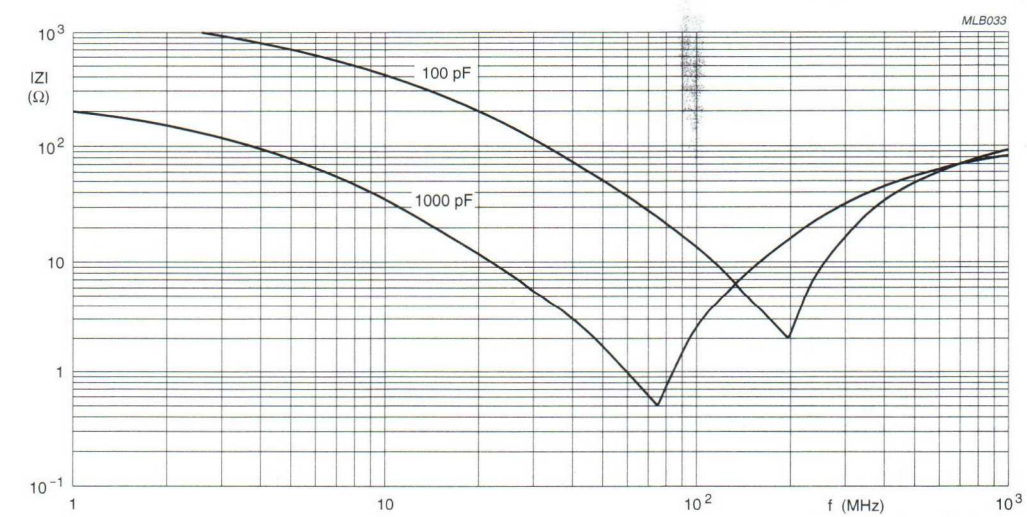


Fig.6 Typical impedance |Z| as a function of frequency.

# Miniature ceramic plate capacitors

# Class 2, low loss, 1000 V (DC) (2E2 flanged types)

## FEATURES

- High reliability
- Coupling and decoupling
- Space saving
- High temperature circuits.

## APPLICATIONS

In electronic circuits where high reliability and low losses with frequency and temperature are essential, for example:

- HF ballast
- SMPS
- Snubber and high voltage circuits.

Because of their small sizes, the capacitors are ideal for circuitry with a high component density.

## DESCRIPTION

The capacitors consist of a thin rectangular ceramic plate, both sides of which are metallized. The tinned connecting leads are secured using a high melting point solder. The capacitors are encapsulated in epoxy lacquer, which is resistant to all commonly used cleaning solvents. They have small dimensions and narrow tolerances on the lead spacing. The leads are provided with a flange. The flange guarantees that the leads are free of lacquer, and its shape allows soldering gasses to escape freely, ensuring excellent solderability. This makes the capacitors suitable for both hand-mounting and automatic insertion.

## QUICK REFERENCE DATA

| DESCRIPTION | VALUE |
|---|---|
| Capacitance range (E12 series) | 270 to 3300 pF |
| Rated DC voltage | 1000 V |
| Tolerance on capacitance | ±20% |
| Sectional specification | IEC 384-9 (2E2) |
| Climatic category (IEC 68) | 55/105/56 |

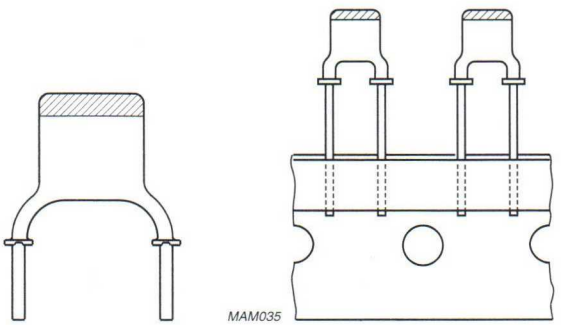


Fig.1 Outlines.

# Miniature ceramic plate capacitors

# Class 2, low loss, 1000 V (DC) (2E2 flanged types)

## MECHANICAL DATA

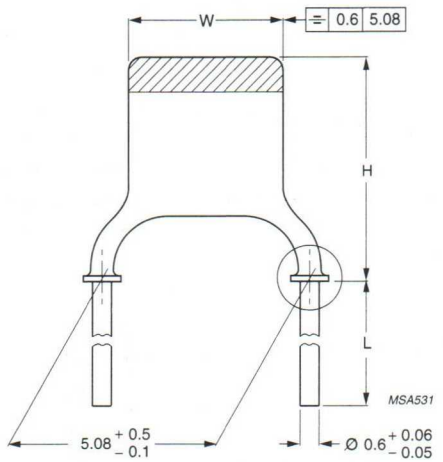


Dimensions in mm.
For dimensions H, L and W see Tables 1 and 2.

Fig.2 Component outline.

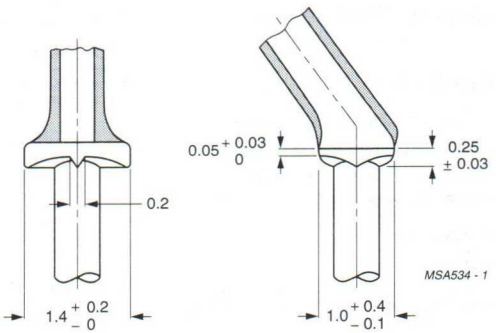


Dimensions in mm.

Fig.3 Detail of flange.

### Marking

The body of the capacitors is tan coloured. The temperature dependency is indicated by a blue coloured cap. Capacitance value and voltage are indicated by a marking code on the body. Refer to Table 3 for marking codes.

### Mounting

When bending, cutting or flattening, the leads should be relieved of the applied load by supporting them at the capacitor body.

Soldering conditions:

max. 265 °C, max. 10 s.

The capacitors are suitable for mounting on printed-circuit boards (hand-mounting or automatic insertion).

### Physical dimensions

**Table 1** Capacitor dimensions and mass

| SIZE(1) | W(2) (mm) | H(2) (mm) | MASS (g) |
|---|---|---|---|
| I | 3.6 (–1.1) | 6.3 (–1.8) | ≈0.15 |
| IIA | 3.9 (–1.4) | 6.7 (–2.0) | ≈0.15 |
| IIB | 4.5 (–1.8) | 7.3 (–2.4) | ≈0.18 |
| III | 5.3 (–1.8) | 8.1 (–2.6) | ≈0.22 |
| IV | 6.2 (–2.0) | 9.0 (–2.7) | ≈0.33 |
| V | 6.2 (–2.0) | 11.2 (–3.1) | ≈0.47 |

**Notes**

1. Unless indicated in Table 3, the thickness of the capacitors does not exceed 3.0 mm.
2. Tolerances are given between parentheses.

## PACKAGING

For details refer to this handbook, Chapter *'Miniature ceramic plate capacitors"*, Section *"General data"*.

## ORDERING INFORMATION

**Table 2** Catalogue numbers

| PITCH P | LEAD DIAMETER d | CATALOGUE NUMBERS(1) | | | |
|---|---|---|---|---|---|
| | | BULK PACKED | | ON TAPE(2) (REEL) | ON TAPE(2) (AMMOPACK) |
| | | L ≥ 13 mm | L = 4 ±0.5 mm | | |
| 5.08 mm (0.2 inch) | 0.6 mm (0.024 inch) | 2222 695 09... | 2222 695 19... | 2222 695 53... | 2222 695 63... |

**Notes**

1. Catalogue numbers to be completed by adding the 3-digit suffix for required capacitance value, see Table 3.
2. $H_0$ = 18.25 mm.

**Table 3** **Preferred** range of values

| CAPACITANCE VALUE (pF) | SIZE (see Table 1) | MARKING CODE | | SUFFIX OF CATALOGUE NUMBERS (see Table 2) |
|---|---|---|---|---|
| | | VALUE | VOLTAGE(1) | |
| 270 | I | n27 | 1 kV | 271 |
| 330 | I | n33 | 1 kV | 331 |
| 390 | IIA | n39 | 1 kV | 391 |
| 470 | IIA | n47 | 1 kV | 471 |
| 560 | IIA | n56 | 1 kV | 561 |
| 680 | IIB | n68 | 1 kV | 681 |
| 820 | IIB | n82 | 1 kV | 821 |
| 1000 | III | 1n0 | 1 kV | 102 |
| 1200 | III | 1n2 | 1 kV | 122 |
| 1500 | III | 1n5 | 1 kV | 152 |
| 1800 | IV | 1n8 | 1 kV | 182 |
| 2200 | IV | 2n2 | 1 kV | 222 |
| 2700 | V | 2n7 | 1 kV | 272 |
| 3300 | V | 3n3 | 1 kV | 332 |

**Note**

1. The voltage code may be marked on the front or rear side of the capacitor.

## ELECTRICAL CHARACTERISTICS

The capacitors meet the essential requirements of *"IEC 384-9"*. Unless stated otherwise all electrical values apply at an ambient temperature of 20 ±1 °C, an atmospheric pressure of 86 to 106 kPa and a relative humidity of 63 to 67%.

| DESCRIPTION | VALUE |
|---|---|
| Capacitance values measured at 1 kHz, 1 V | see Table 3 |
| Tolerance on the capacitance, after 1000 hours | ±20% |
| Rated DC voltage | 1000 V |
| DC test voltage; duration 1 minute | 2000 V |
| DC test voltage of coating; duration 1 minute | 2000 V |
| Insulation resistance at 500 V (DC) after 1 minute | >6000 MΩ |
| Tan δ measured at 1 kHz, 1 V | <1% |
| Category temperature range | −55 to +105 °C (2E2) |
| Storage temperature range | −55 to +85 °C |
| Typical capacitance change as a function of frequency | see Fig.5 |
| Typical tan δ as a function of frequency | see Fig.6 |
| Climatic category (IEC 68) | 55/105/56 |
| Ageing | typical 5% per time decade |

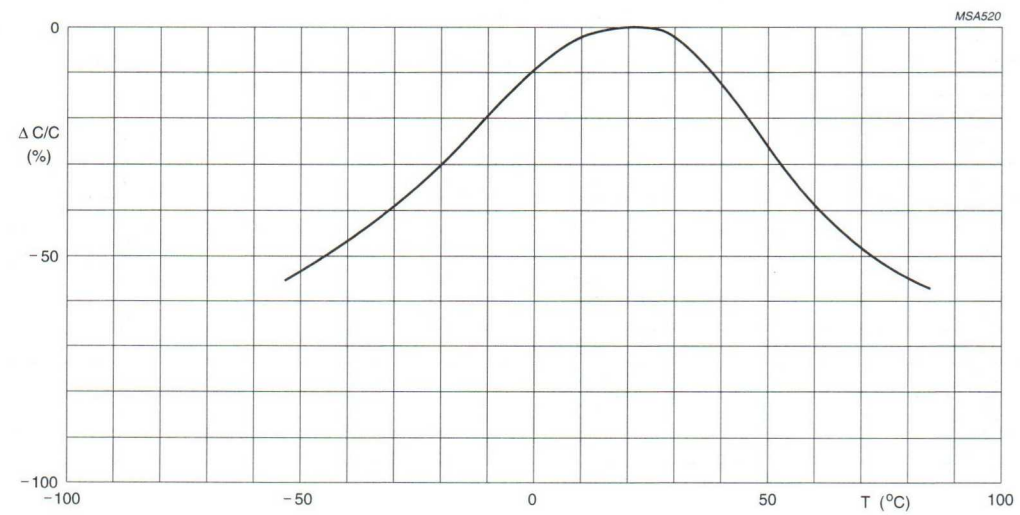


f = 1 kHz.
U = 1 V (DC).

Fig.4 Typical capacitance change with respect to the capacitance at 20 °C as a function of temperature.

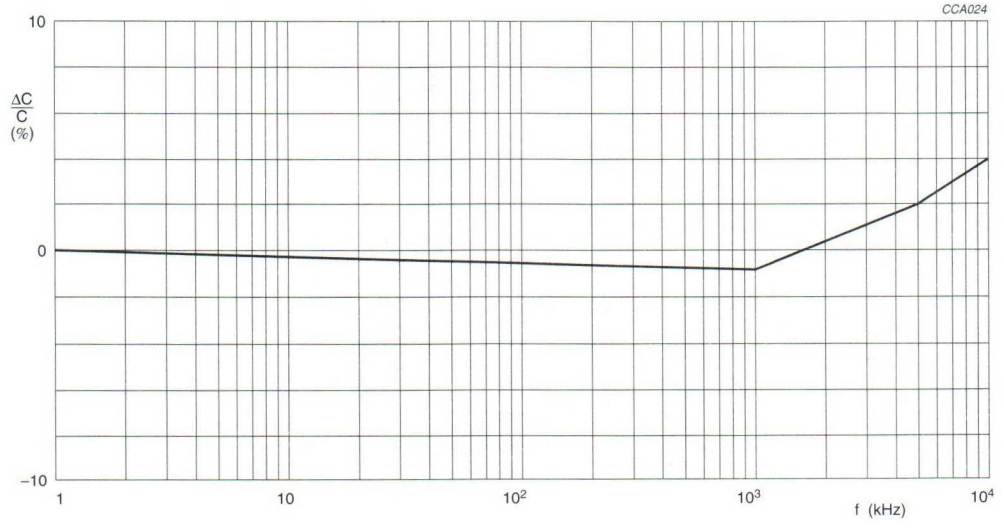


Fig.5 Typical capacitance change as a function of frequency.

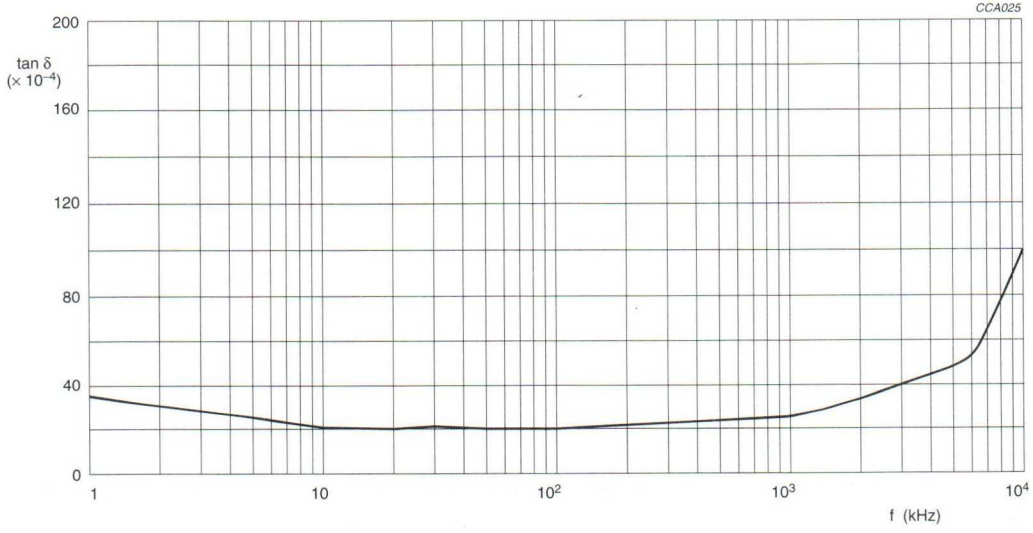


Fig.6 Typical tan δ as a function of frequency.

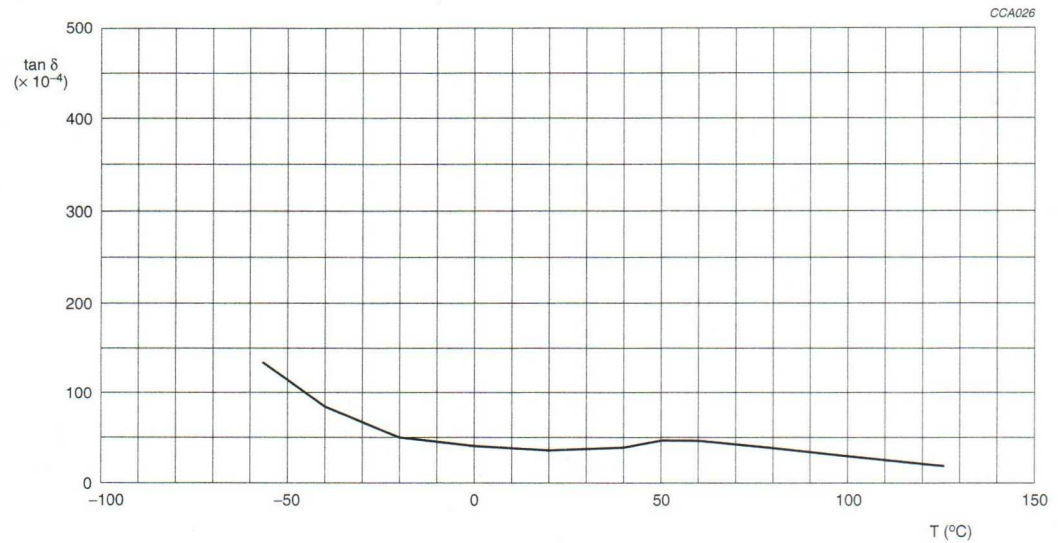


Fig.7 Typical tan δ as a function of temperature.

## SAMPLE KITS: MINIATURE CERAMIC PLATE CAPACITORS

| TC (TK)[1] | CAP. TOL. | | $U_{R(DC)}$ (V) | LEAD SPACING (mm) | LEAD LENGTH (mm) | CAPACITANCE VALUES[2] (pF) | SAMPLES PER VALUE | SAMPLES PER KIT | ORDER NUMBER (2222) |
|---|---|---|---|---|---|---|---|---|---|
| | <10 pF (pF) | ≥10 pF (%) | | | | | | | |
| **Sample kits on plastic blisters** | | | | | | | | | |
| NP0 precision (C0G)[3] | ±0.1 | ±1 | 100 | 5.08 | >13 | 1; 1.5; 2.2; 3.3; 4.7; 6.8; 10; 12; 15; 22; 33; 47; 68; 100; 120; 150; 180; 220 | 50 | 900 | 683 90001 |
| P100 (M7G) | ±0.25 | ±2 | | 5.08 | >13 | 0.56; 0.68; 0.82; 1; 1.2; 1.5; 2.2; 3.3; 4.7; 6.8; 10; 12; 15; 22; 27; 33; 39; 47 | 50 | 900 | 683 04001 |
| NP0 (C0G) | ±0.25 | ±2 | | 5.08 | >13 | 1.8; 2.2; 2.7; 3.3; 4.7; 6.8; 10; 12; 15; 22; 33; 47; 68; 100; 120; 150; 180; 220 | 50 | 900 | 683 10001 |
| N150 (P2G) | ±0.25 | ±2 | | 5.08 | >13 | 3.9; 4.7; 6.8; 10; 12; 15; 18; 22; 27; 33; 47; 68; 82; 100; 120; 150; 180; 220 | 50 | 900 | 683 34001 |
| N750 (U2J) | ±0.25 | ±2 | | 5.08 | >13 | 3.9; 4.7; 6.8; 10; 12; 15; 18; 22; 33; 47; 68; 100; 120; 150; 180; 220; 270; 330 | 50 | 900 | 683 58001 |
| N1500 (P3K) | – | ±2 | | 5.08 | >13 | 18; 22; 27; 33; 39; 47; 68; 82;100; 120; 150; 180; 220; 270; 330; 390; 470; 560 | 50 | 900 | 683 70001 |
| 2C2/2E1 (X5S/X7T) | – | ±10 | | 5.08 | >13 | 180; 220; 330; 470; 560; 680; 820; 1000; 1200; 1500; 1800; 2200; 2700; 3300; 3900; 4700; 5600; 6800 | 50 | 900 | 630 09001 |
| 2E2 (X5U) | – | –20/+50 | | 5.08 | >13 | 1000; 1200; 1500; 2200; 3300; 4700; 6800; 10000; 15000 | 100 | 900 | 640 09001 |
| 2F6 (Y5V) | – | –20/+80 | 63 | 5.08 | >13 | 1000; 1500; 2200; 4700; 10000; 15000; 22000; 33000; 47000 | 100 | 900 | 629 09001 |
| NP0 precision (C0G)[3] | ±0.1 | ±1 | 500 | 5.08 | >13 | 0.82; 1; 1.2; 1.5; 2.2; 3.3; 4.7; 6.8; 10; 12; 15; 22; 33; 47; 68; 100; 120; 150 | 50 | 900 | 652 90001 |
| P100 (M7G) | ±0.25 | ±2 | | 5.08 | >13 | 0.47; 0.56; 0.68; 0.82; 1; 1.2; 1.5; 1.8; 2.2; 3.3; 4.7; 6.8; 10; 12; 15; 22; 27; 33 | 50 | 900 | 652 04001 |
| NP0 (C0G) | ±0.25 | ±2 | | 5.08 | >13 | 1; 1.5; 1.8; 2.2; 2.7; 3.3; 4.7; 6.8; 10; 12; 15; 22; 33; 47; 68; 100; 120; 150 | 50 | 900 | 652 10001 |
| N150 (P2G) | ±0.25 | ±2 | | 5.08 | >13 | 2.2; 3.3; 3.9; 4.7; 6.8; 10; 12; 15; 18; 22; 27; 33; 47; 68; 82; 100; 120; 150 | 50 | 900 | 652 34001 |
| N750 (U2J) | ±0.25 | ±2 | | 5.08 | >13 | 1.8; 2.2; 2.7; 3.3; 3.9; 4.7; 6.8; 10; 12; 15; 18; 22; 33; 47; 68; 100; 120; 150 | 50 | 900 | 652 58001 |
| N1500 (P3K) | – | ±2 | | 5.08 | >13 | 10; 12; 15; 18; 22; 27; 33; 39; 47; 68; 82; 100; 120; 150; 180; 220; 270; 330 | 50 | 900 | 652 70001 |

| TC (TK)[1] | CAP. TOL. <10 pF (pF) | CAP. TOL. ≥10 pF (%) | $U_{R(DC)}$ (V) | LEAD SPACING (mm) | LEAD LENGTH (mm) | CAPACITANCE VALUES[2] (pF) | SAMPLES PER VALUE | SAMPLES PER KIT | ORDER NUMBER (2222) |
|---|---|---|---|---|---|---|---|---|---|
| 2C2/2E1 (X5S/X7T) | – | ±10 | 500 | 5.08 | >13 | 100; 150; 180; 220; 270; 330; 470; 560; 680; 820; 1000; 1200; 1500; 1800; 2200; 2700; 3300; 3900; 4700 | 50 | 900 | 655 09001 |
| SL (P100 to N1500) | ±0.25 | ±5 | 1000 | 5.08 | >13 | 0.47; 1; 1.5; 1.8; 2.2; 2.7; 3.3; 4.7; 6.8; 10; 12; 15; 22; 33; 47; 68; 100; 120 | 25 | 450 | 694 09001 |
| 2C2/2E1 (X5S/X7T) | – | ±10 | | 5.08 | >13 | 100; 150; 180; 220; 270; 330; 470; 680; 1000; 1200 | 50 | 450 | 693 09001 |
| 2E2 (X5U) | – | ±20 | | 5.08 | >13 | 270; 330; 470; 680; 1000; 1500; 2200; 2700; 3300 | 50 | 450 | 695 09001 |
| **Sample kits in cardboard boxes** | | | | | | | | | |
| NP0 precision (C0G)[3] | ±0.1 | ±1 | 100 | 5.08 | >13 | 1; 2.2; 4.7; 10; 15; 22; 47; 100; 150; 220 | 500 | 5000 | 683 90002 |
| P100 (M7G) | ±0.25 | ±2 | | 5.08 | >13 | 0.56; 1; 1.5; 2.2; 4.7; 10; 15; 22; 33; 47 | 500 | 5000 | 683 04002 |
| NP0 (C0G) | ±0.25 | ±2 | | 5.08 | >13 | 1.5; 2.7; 4.7; 10; 15; 22; 47; 100; 150; 220 | 500 | 5000 | 683 10002 |
| N150 (P2G) | ±0.25 | ±2 | | 5.08 | >13 | 3.9; 4.7; 10; 15; 22; 47; 68; 100; 150; 220 | 500 | 5000 | 683 34002 |
| N750 (U2J) | ±0.25 | ±2 | | 5.08 | >13 | 3.9; 4.7; 10; 15; 22; 47; 100; 150; 220; 330 | 500 | 5000 | 683 58002 |
| N1500 (P3K) | – | ±2 | | 5.08 | >13 | 18; 22; 47; 68; 100; 150; 220; 330; 470; 560 | 500 | 5000 | 683 70002 |
| 2C2/2E1 (X5S/X7T) | – | ±10 | | 5.08 | >13 | 180; 220; 470; 680; 1000; 1500; 2200; 3300; 4700; 5600 | 500 | 5000 | 630 09002 |
| 2E2 (X5U) | – | –20/+50 | | 5.08 | >13 | 1000; 1200; 1500; 2200; 3300; 4700; 6800; 8200; 10000; 15000 | 500 | 5000 | 640 09002 |
| 2F6 (Y5V) | – | –20/+80 | 63 | 5.08 | >13 | 1000; 1500; 2200; 4700; 6800; 10000; 15000; 22000; 33000; 47000 | 500 | 5000 | 629 09002 |
| NP0 precision (C0G)[3] | ±0.1 | ±1 | 500 | 5.08 | >13 | 0.82; 1; 2.2; 4.7; 10; 15; 22; 47; 100; 150 | 500 | 5000 | 652 90002 |
| P100 (M7G) | ±0.25 | ±2 | | 5.08 | >13 | 0.47; 0.68; 1; 1.5; 2.2; 4.7; 10; 15; 22; 33 | 500 | 5000 | 652 04002 |
| NP0 (C0G) | ±0.25 | ±2 | | 5.08 | >13 | 0.82; 1; 2.2; 4.7; 10; 15; 22; 47; 100; 150 | 500 | 5000 | 652 10002 |
| N150 (P2G) | ±0.25 | ±2 | | 5.08 | >13 | 2.2; 4.7; 10; 15; 22; 47; 68; 100; 120; 150 | 500 | 5000 | 652 34002 |
| N750 (U2J) | ±0.25 | ±2 | | 5.08 | >13 | 1.8; 2.2; 4.7; 10; 15; 22; 47; 68; 100; 150 | 500 | 5000 | 652 58002 |
| N1500 (P3K) | – | ±2 | | 5.08 | >13 | 10; 15; 22; 47; 68; 100; 150; 120; 470; 560 | 500 | 5000 | 652 70002 |
| 2C2/2E1 (X5S/X7T) | – | ±10 | | 5.08 | >13 | 100; 150; 220; 470; 680; 1000; 1500; 2200; 3300; 4700 | 500 | 5000 | 655 09002 |

| TC (TK)[1] | CAP. TOL. | | $U_{R(DC)}$ (V) | LEAD SPACING (mm) | LEAD LENGTH (mm) | CAPACITANCE VALUES[2] (pF) | SAMPLES PER VALUE | SAMPLES PER KIT | ORDER NUMBER (2222) |
|---|---|---|---|---|---|---|---|---|---|
| | <10 pF (pF) | ≥10 pF (%) | | | | | | | |
| SL (P100 to N1500) | ±0.25 | ±5 | 1000 | 5.08 | >13 | 0.47; 1; 2.2; 4.7; 10; 15; 22; 47; 68; 100 | 500 | 5000 | 694 09002 |
| 2C2/2E1 (X5S/X7T) | – | ±10 | | 5.08 | >13 | 100; 150; 180; 220; 330; 470; 680; 820; 1000; 1200 | 500 | 5000 | 693 09002 |
| 2E2 (X5U) | – | ±20 | | 5.08 | >13 | 270; 330; 470; 680; 820; 1000; 1500; 2200; 2700; 3300 | 500 | 5000 | 695 09002 |

**Notes**

1. Temperature coefficient code in accordance with *"RS198"* is shown between parentheses.
2. Other capacitance values and tolerances are available on request. Customized sample kits are also available on request.
3. E24 series of values are available on request.

DATA HANDBOOK SYSTEM

# Data handbook system

## DATA HANDBOOK SYSTEM

Philips Components data handbooks are available for selected product ranges and contain all relevant data available at the time of publication and each is revised and updated regularly.

Loose data sheets are sent to subscribers to keep them up-to-date on additions or alterations made during the lifetime of each edition.

Our data handbook titles are listed here.

### Display components

| *Book* | *Title* |
|---|---|
| DC01 | Colour Television Tubes |
| DC02 | Monochrome Monitor Tubes and Deflection Units |
| DC03 | Television Tuners, Coaxial Aerial Input Assemblies |
| DC04 | Colour Monitor and Multimedia Tubes |
| DC05 | Wire Wound Components |

### Magnetic products

| | |
|---|---|
| MA01 | Soft Ferrites |
| MA03 | Piezoelectric Ceramics and Specialty Ferrites |
| MA04 | Dry-reed Switches |

### Passive components

| | |
|---|---|
| PA01 | Electrolytic Capacitors |
| PA02 | Varistors, Thermistors and Sensors |
| PA03 | Potentiometers |
| PA04 | Variable Capacitors |
| PA05 | Film Capacitors |
| PA06 | Ceramic Capacitors |
| PA06a | Surface Mounted Ceramic Multilayer Capacitors |
| PA06b | Leaded Ceramic Capacitors |
| PA08 | Fixed Resistors |
| PA10 | Quartz Crystals |
| PA11 | Quartz Oscillators |

## MORE INFORMATION FROM PHILIPS COMPONENTS?

For more information about Philips Components data handbooks, catalogues and subscriptions, please contact your nearest Philips Components sales organization **(see address list on the back cover of this handbook).**

## OVERVIEW OF PHILIPS SEMICONDUCTORS DATA HANDBOOKS

Our sister product division, Philips Semiconductors, also has a comprehensive data handbook system to support their products. Their data handbook titles are listed here.

### Integrated circuits

| *Book* | *Title* |
|---|---|
| IC01 | Semiconductors for Radio, Audio and CD/DVD Systems |
| IC02 | Semiconductors for Television and Video Systems |
| IC03 | Semiconductors for Wired Telecom Systems |
| IC04 | HE4000B Logic Family CMOS |
| IC05 | Advanced Low-power Schottky (ALS) Logic |
| IC06 | High-speed CMOS Logic Family |
| IC11 | General-purpose/Linear ICs |
| IC12 | $I^2C$ Peripherals |
| IC13 | Programmable Logic Devices (PLD) |
| IC14 | 8048-based 8-bit Microcontrollers |
| IC15 | FAST TTL Logic Series |
| IC16 | CMOS ICs for Clocks and Watches |
| IC17 | Semiconductors for Wireless Communications |
| IC18 | Semiconductors for In-Car Electronics |
| IC19 | ICs for Data Communications |
| IC20 | 80C51-based 8-bit Microcontrollers |
| IC22 | Multimedia ICs |
| IC23 | BiCMOS Bus Interface Logic |
| IC24 | Low Voltage CMOS & BiCMOS Logic |
| IC25 | 16-bit 80C51XA Microcontrollers (eXtended Architecture) |
| IC26 | IC Circuit Packages |
| IC27 | Complex Programmable Logic Devices |

### Discrete semiconductors

| | |
|---|---|
| SC01 | Small-signal and Medium-power Diodes |
| SC02 | Power Diodes |
| SC03 | Power Thyristors and Triacs |
| SC04 | Small-signal Transistors |
| SC05 | Video Transistors and Modules for Monitors |
| SC06 | High-voltage and Switching NPN Power Transistors |
| SC07 | Small-signal Field-effect Transistors |
| SC13a | PowerMOS Transistors including TOPFETs and IGBTs |
| SC13b | Small-signal and Medium-power MOS Transistors |
| SC14 | RF Wideband Transistors |
| SC16 | Wideband Hybrid IC Modules |
| SC17 | Semiconductor Sensors |
| SC18 | Discrete Semiconductor Packages |
| SC19 | RF & Microwave Power Transistors, RF Power Modules and Circulators/Isolators |

## MORE INFORMATION FROM PHILIPS SEMICONDUCTORS?

For more information contact your nearest Philips Semiconductors national organization shown in the following list.

**Argentina:** see South America
**Australia:** NORTH RYDE, Tel. +61 2 9805 4455 Fax. +61 2 9805 4466
**Austria:** WIEN, Tel. +43 1 60 101, Fax. +43 1 60 101 1210
**Belarus:** MINSK, Tel. +375 172 200 733, Fax. +375 172 200 773
**Belgium:** see The Netherlands
**Brazil:** see South America
**Bulgaria:** SOFIA, Tel. +359 2 689 211, Fax. +359 2 689 102
**Canada:** SCARBOROUGH, Tel. +1 800 234 7381
**Chile:** see South America
**China/Hong Kong:** HONG KONG, Tel. +852 2319 7888, Fax. +852 2319 7700
**Colombia:** see South America
**Czech Republic:** see Austria
**Denmark:** COPENHAGEN, Tel. +45 32 88 2636, Fax. +45 31 57 0044
**Finland:** ESPOO, Tel. +358 9 615800, Fax. +358 9 61580920
**France:** SURESNES, Tel. +33 1 40 99 6161, Fax. +33 1 40 99 6427
**Germany:** HAMBURG, Tel. +49 40 23 53 60, Fax. +49 40 23 536 300
**Greece:** TAVROS/ATHENS, Tel. +30 1 4894 339/239, Fax. +30 1 4814 240
**Hungary:** see Austria
**India:** BOMBAY, Tel. +91 22 4938 541, Fax. +91 22 4938 722
**Indonesia:** see Singapore
**Ireland:** DUBLIN, Tel. +353 1 7640 000, Fax. +353 1 7640 200
**Israel:** TEL AVIV, Tel. +972 3 645 0444, Fax. +972 3 649 1007
**Italy:** MILANO, Tel. +39 2 6752 2531, Fax. +39 2 6752 2557
**Japan:** TOKIO, Tel. +81 3 3740 5130, Fax. +81 3 3740 5077
**Korea:** SEOUL, Tel. +82 2 709 1412, Fax. +82 2 709 1415
**Malaysia:** SELANGOR, Tel. +60 3 750 5214, Fax. +60 3 757 4880
**Mexico:** EL PASO, TEXAS, Tel. +9-5 800 234 7381
**Middle East:** see Italy
**Netherlands:** EINDHOVEN, Tel. +31 40 27 82785, Fax. +31 40 27 88399
**New Zealand:** AUCKLAND, Tel. +64 9 849 4160, Fax. +64 9 849 7811
**Norway:** OSLO, Tel. +47 22 74 8000, Fax. +47 22 74 8341
**Philippines:** MANILA, Tel. +63 2 816 6380, Fax. +63 2 817 3474
**Poland:** WARSZAWA, Tel. +48 22 612 2831, Fax. +48 22 612 2327
**Portugal:** see Spain
**Romania:** see Italy
**Russia:** MOSCOW, Tel. +7 095 755 6918, Fax. +7 095 755 6919
**Singapore:** SINGAPORE, Tel. +65 350 2538, Fax. +65 251 6500
**Slovakia:** see Austria
**Slovenia:** see Italy
**South Africa:** JOHANNESBURG, Tel. +27 11 470 5911, Fax. +27 11 470 5494
**South America:** SÃO PAULO, Tel. +55 11 821 2333, Fax. +55 11 821 2382
**Spain:** BARCELONA, Tel. +34 3 301 6312, Fax. +34 3 301 4107
**Sweden:** STOCKHOLM, Tel. +46 8 632 2000, Fax. +46 8 632 2745
**Switzerland:** ZÜRICH, Tel. +41 1 488 2686, Fax. +41 1 481 7730
**Taiwan:** TAIPEI, Tel. +886 2 2134 2865, Fax. +886 2 2134 2874
**Thailand:** BANGKOK, Tel. +66 2 745 4090, Fax. +66 2 398 0793
**Turkey:** ISTANBUL, Tel. +90 212 279 2770, Fax. +90 212 282 6707
**Ukraine:** KIEV, Tel. +380 44 264 2776, Fax. +380 44 268 0461
**United Kingdom:** HAYES, Tel. +44 181 730 5000, Fax. +44 181 754 8421
**United States:** SUNNYVALE, Tel. +1 800 234 7381
**Uruguay:** see South America
**Vietnam:** see Singapore
**Yugoslavia:** BEOGRAD, Tel. +381 11 625 344, Fax. +381 11 635 777

**Internet:** http://www.semiconductors.philips.com

For all other countries apply to:
**Philips Semiconductors,**
International Marketing & Sales Communications, Building BE-p,
P.O. Box 218, 5600 MD EINDHOVEN, The Netherlands,
Fax. +31-40-2724825

NOTES

NOTES

NOTES

NOTES

NOTES

NOTES

NOTES

NOTES

NOTES

NOTES

NOTES

## STANDARD SERIES OF VALUES IN A DECADE FOR RESISTANCES AND CAPACITANCES

According to *"IEC publication 63"*.

| E192 | E96 | E48 | E192 | E96 | E48 | E192 | E96 | E48 | E192 | E96 | E48 |
|---|---|---|---|---|---|---|---|---|---|---|---|
| 100 | 100 | 100 | 178 | 178 | 178 | 316 | 316 | 316 | 562 | 562 | 562 |
| 101 | | | 180 | | | 320 | | | 569 | | |
| 102 | 102 | | 182 | 182 | | 324 | 324 | | 576 | 576 | |
| 104 | | | 184 | | | 328 | | | 583 | | |
| 105 | 105 | 105 | 187 | 187 | 187 | 332 | 332 | 332 | 590 | 590 | 590 |
| 106 | | | 189 | | | 336 | | | 597 | | |
| 107 | 107 | | 191 | 191 | | 340 | 340 | | 604 | 604 | |
| 109 | | | 193 | | | 344 | | | 612 | | |
| 110 | 110 | 110 | 196 | 196 | 196 | 348 | 348 | 348 | 619 | 619 | 619 |
| 111 | | | 198 | | | 352 | | | 626 | | |
| 113 | 113 | | 200 | 200 | | 357 | 357 | | 634 | 634 | |
| 114 | | | 203 | | | 361 | | | 642 | | |
| 115 | 115 | 115 | 205 | 205 | 205 | 365 | 365 | 365 | 649 | 649 | 649 |
| 117 | | | 208 | | | 370 | | | 657 | | |
| 118 | 118 | | 210 | 210 | | 374 | 374 | | 665 | 665 | |
| 120 | | | 213 | | | 379 | | | 673 | | |
| 121 | 121 | 121 | 215 | 215 | 215 | 383 | 383 | 383 | 681 | 681 | 681 |
| 123 | | | 218 | | | 388 | | | 690 | | |
| 124 | 124 | | 221 | 221 | | 392 | 392 | | 698 | 698 | |
| 126 | | | 223 | | | 397 | | | 706 | | |
| 127 | 127 | 127 | 226 | 226 | 226 | 402 | 402 | 402 | 715 | 715 | 715 |
| 129 | | | 229 | | | 407 | | | 723 | | |
| 130 | 130 | | 232 | 232 | | 412 | 412 | | 732 | 732 | |
| 132 | | | 234 | | | 417 | | | 741 | | |
| 133 | 133 | 133 | 237 | 237 | 237 | 422 | 422 | 422 | 750 | 750 | 750 |
| 135 | | | 240 | | | 427 | | | 759 | | |
| 137 | 137 | | 243 | 243 | | 432 | 432 | | 768 | 768 | |
| 138 | | | 246 | | | 437 | | | 777 | | |
| 140 | 140 | 140 | 249 | 249 | 249 | 442 | 442 | 442 | 787 | 787 | 787 |
| 142 | | | 252 | | | 448 | | | 796 | | |
| 143 | 143 | | 255 | 255 | | 453 | 453 | | 806 | 806 | |
| 145 | | | 258 | | | 459 | | | 816 | | |
| 147 | 147 | 147 | 261 | 261 | 261 | 464 | 464 | 464 | 825 | 825 | 825 |
| 149 | | | 264 | | | 470 | | | 835 | | |
| 150 | 150 | | 267 | 267 | | 475 | 475 | | 845 | 845 | |
| 152 | | | 271 | | | 481 | | | 856 | | |
| 154 | 154 | 154 | 274 | 274 | 274 | 487 | 487 | 487 | 866 | 866 | 866 |
| 156 | | | 277 | | | 493 | | | 876 | | |
| 158 | 158 | | 280 | 280 | | 499 | 499 | | 887 | 887 | |
| 160 | | | 284 | | | 505 | | | 898 | | |
| 162 | 162 | 162 | 287 | 287 | 287 | 511 | 511 | 511 | 909 | 909 | 909 |
| 164 | | | 291 | | | 517 | | | 920 | | |
| 165 | 165 | | 294 | 294 | | 523 | 523 | | 931 | 931 | |
| 167 | | | 298 | | | 530 | | | 942 | | |
| 169 | 169 | 169 | 301 | 301 | 301 | 536 | 536 | 536 | 953 | 953 | 953 |
| 172 | | | 305 | | | 542 | | | 965 | | |
| 174 | 174 | | 309 | 309 | | 549 | 549 | | 976 | 976 | |
| 176 | | | 312 | | | 556 | | | 988 | | |

| E24 | E12 | E6 | E3 |
|---|---|---|---|
| 10 | 10 | 10 | 10 |
| 11 | | | |
| 12 | 12 | | |
| 13 | | | |
| 15 | 15 | 15 | |
| 16 | | | |
| 18 | 18 | | |
| 20 | | | |
| 22 | 22 | 22 | 22 |
| 24 | | | |
| 27 | 27 | | |
| 30 | | | |
| 33 | 33 | 33 | |
| 36 | | | |
| 39 | 39 | | |
| 43 | | | |
| 47 | 47 | 47 | 47 |
| 51 | | | |
| 56 | 56 | | |
| 62 | | | |
| 68 | 68 | 68 | |
| 75 | | | |
| 82 | 82 | | |
| 91 | | | |

# Philips Components – a worldwide company

**Australia:** Philips Components Pty Ltd, NORTH RYDE,
Tel. (02) 9805 4455, Fax. (02) 9805 4466.

**Austria:** Österreichische Philips Industrie GmbH, WIEN,
Tel. (01) 601 01 12 41, Fax. (01) 60 101 12 11.

**Belarus:** Philips Office Belarus, MINSK,
Tel. (5172) 200 924/733, Fax. (5172) 200 773.

**Benelux:** Philips Nederland B.V., EINDHOVEN, NL.,
Tel. (+31 40) 2783 749, Fax. (+31 40) 2788 399.

**Brazil:** Philips Components, SÃO PAULO,
Tel. (011) 821 2333, Fax. (011) 829 1849.

**Canada:** Philips Electronics Ltd., SCARBOROUGH,
Tel. (0416) 292 5161, Fax. (0416) 754 6248.

**China:** Philips Company, SHANGHAI,
Tel. (021) 6354 1088, Fax. (021) 6354 1060.

**Denmark:** Philips Components A/S, COPENHAGEN S,
Tel. (32) 883 333, Fax. (31) 571 949.

**Finland:** Philips Components, ESPOO,
Tel. (0) 9 615 800, Fax. (0) 9 615 80510.

**France:** Philips Composants, SURESNES,
Tel. (01) 4099 6161, Fax. (01) 4099 6493.

**Germany:** Philips Components GmbH, HAMBURG,
Tel. (040) 2489-0, Fax. (040) 2489 1400.

**Greece:** Philips Hellas S.A., TAVROS,
Tel. (01) 4894 339/(01) 4894 239, Fax. (01) 4814 240.

**Hong Kong:** Philips Hong Kong, KOWLOON,
Tel. 2784 3000, Fax. 2784 3003.

**India:** Philips India Ltd., MUMBAI,
Tel. (022) 4930 311, Fax. (022) 4930 966/4950 304.

**Indonesia:** P.T. Philips Development Corp., JAKARTA,
Tel. (021) 794 0040, Fax. (021) 794 0080.

**Ireland:** Philips Electronics (Ireland) Ltd., DUBLIN,
Tel. (01) 76 40 203, Fax. (01) 76 40 210.

**Israel:** Rapac Electronics Ltd., TEL AVIV,
Tel. (03) 6450 444, Fax. (03) 6491 007.

**Italy:** Philips Components S.r.l., MILANO,
Tel. (02) 6752 2531, Fax. (02) 6752 2557.

**Japan:** Philips Japan Ltd., TOKYO,
Tel. (0) 3 3740 5135, Fax. (0) 3 3740 5035.

**Korea** (Republic of): Philips Electronics (Korea) Ltd., SEOUL,
Tel. (02) 709 -1472, Fax. (02) 709 1480.

**Malaysia:** Philips Malaysia SDN Berhad
Components Division, PULAU PINANG,
Tel. (03) 750 5213, Fax. (03) 757 4880.

**Mexico:** Philips Components, EL PASO, U.S.A.,
Tel. (915) 772 4020, Fax. (915) 772 4332.

**New Zealand:** Philips New Zealand Ltd., AUCKLAND,
Tel. (09) 815 4000, Fax. (09) 849 7811.

**Norway:** Norsk A/S Philips, OSLO,
Tel. (22) 74 8000, Fax. (22) 74 8341.

**Pakistan:** Philips Electrical Industries of Pakistan Ltd., KARACHI,
Tel. (021) 587 4641-49, Fax. (021) 577 035/587 4546.

**Philippines:** Philips Semiconductors Philippines Inc.,
METRO MANILA, Tel. (02) 816 6345, Fax. (02) 817 3474.

**Poland:** Philips Poland Sp. z.o.o., WARSZAWA,
Tel. (022) 612 2594, Fax. (022) 612 2327.

**Portugal:** Philips Portuguesa S.A.,
Philips Components: LINDA-A-VELHA,
Tel. (01) 416 3160/416 3333, Fax. (01) 416 3174/416 3366.

**Russia:** Philips Russia, MOSCOW,
Tel. (095) 755 6918, Fax. (095) 755 6919.

**Singapore:** Philips Singapore Pte Ltd., SINGAPORE,
Tel. 350 2000, Fax. 355 1758.

**South Africa:** S.A. Philips Pty Ltd., JOHANNESBURG,
Tel. (011) 470 5911, Fax. (011) 470 5494.

**Spain:** Philips Components, BARCELONA,
Tel. (93) 301 63 12, Fax. (93) 301 42 43.

**Sweden:** Philips Components AB, STOCKHOLM,
Tel. (+46) 8 632 2000, Fax. (+46) 8 632 2745.

**Switzerland:** Philips Components AG, ZÜRICH,
Tel. (01) 488 22 11, Fax. (01) 481 77 30.

**Taiwan:** Philips Taiwan Ltd., TAIPEI,
Tel. (02) 2134 2900, Fax. (02) 2134 2929.

**Thailand:** Philips Electronics (Thailand) Ltd., BANGKOK,
Tel. (02) 745 4090, Fax. (02) 398 0793.

**Turkey:** Türk Philips Ticaret A.S., GÜLTEPE/ISTANBUL,
Tel. (0212) 279 2770, Fax. (0212) 282 6707.

**United Kingdom:** Philips Components Ltd., DORKING,
Tel. (01306) 512 000, Fax. (01306) 512 345.

**United States:**

- Display and Wire Wound Components, ANN ARBOR, MI,
  Tel. (313) 996 9400, Fax. (313) 761 2776.
- Magnetic Products, SAUGERTIES, NY,
  Tel. (914) 246 2811, Fax. (914) 246 0487.
- Passive Components, SAN JOSE, CA,
  Tel. (408) 570 5600, Fax. (408) 570 5700.

**Yugoslavia** (Federal Republic of): Philips Components, BELGRADE,
Tel. (0) 11 625 344/373, Fax. (0) 11 635 777.

**For all other countries apply to:** Philips Components,
Marketing Communications, P.O. Box 218, 5600 MD EINDHOVEN,
The Netherlands, Fax. +31-40-2724 547.

COD15 © Philips Electronics N.V. 1997

All rights are reserved. Reproduction in whole or in part is prohibited without the prior written consent of the copyright owner.
The information presented in this document does not form part of any quotation or contract, is believed to be accurate and reliable and may be changed without notice. No liability will be accepted by the publisher for any consequence of its use. Publication thereof does not convey nor imply any license under patent- or other industrial or intellectual property rights.

Printed in The Netherlands

533110/20000/01/pp256
Document order number:

Date of release: December 1997
9398 184 16011

PHILIPS

*Let's make things better.*