THIS DRAWING IS UNPUBLISHED RELEASED FOR PUBLICATION 2018
© COPYRIGHT 1995 BY TE CONNECTIVITY ALL RIGHTS RESERVED.

REVISIONS

P	LTR	DESCRIPTION	DATE	DWN	APVD
	E	REVISED PER PCN E-18-001206	24JAN2018	JA	DM

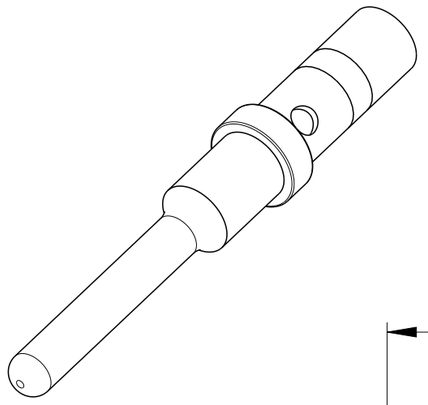

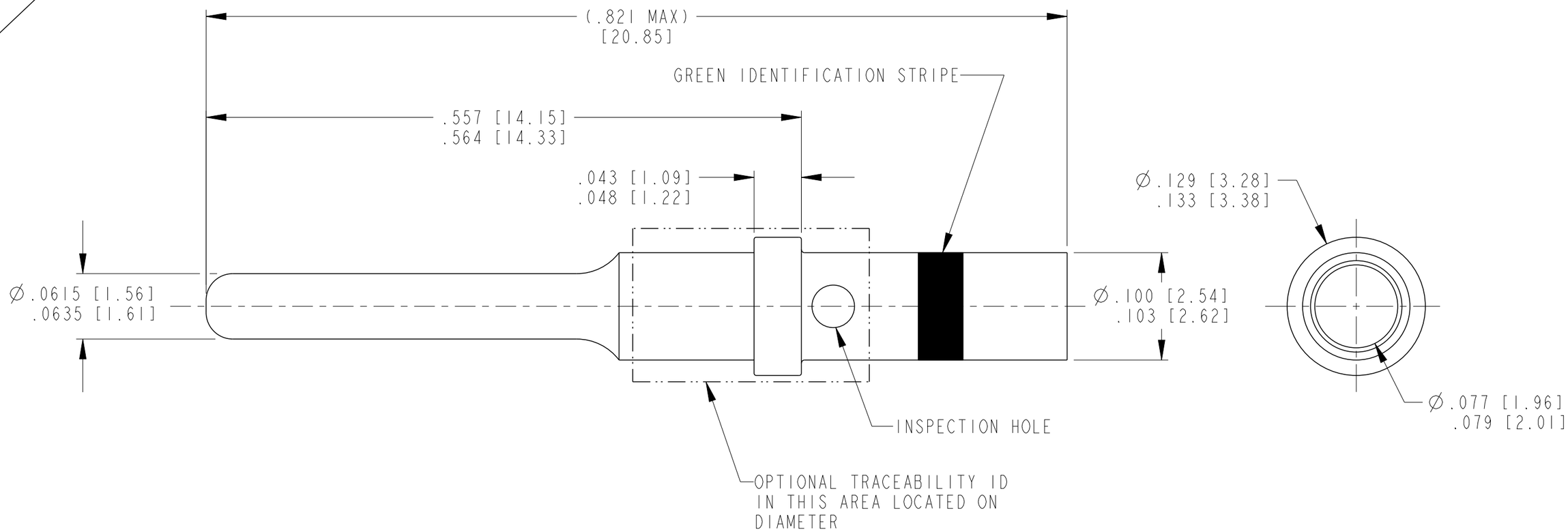

TE INTERNAL PN	DEUTSCH PN	PLATING
0460-215-1631	0460-215-1631	GOLD
0460-215-16141	0460-215-16141	NICKEL

NOTES:

1. WIRE RANGE : 14 AWG [2.0 mm^2].

THIS DRAWING IS A CONTROLLED DOCUMENT.

DIMENSIONS: INCHES [mm]

TOLERANCES UNLESS OTHERWISE SPECIFIED:
0 PLC ±
1 PLC ±
2 PLC ±
3 PLC ±
4 PLC ±
ANGLES ±

MATERIAL

FINISH

DWN D.SPENCER 02OCT1999
CHK B.BYFORD 23JUN2000
APVD D.MEYER 22JUN2000
PRODUCT SPEC 0425-015-0000
APPLICATION SPEC 0425-205-0000
WEIGHT 0.54g

TE Connectivity

NAME CONTACT, PIN SIZE 16
14 AWG WIRE [2.00mm2]

SIZE	CAGE CODE	DRAWING NO	RESTRICTED TO
A3	4AFU8	C-0460-215-16XX	

CUSTOMER DRAWING SCALE 10:1 SHEET 1 OF 1 REV E