THIS DRAWING IS UNPUBLISHED. RELEASED FOR PUBLICATION -,- .
© COPYRIGHT - By - ALL RIGHTS RESERVED.

REVISIONS

P	LTR	DESCRIPTION	DATE	DWN	APVD
	U4	REVISED PER ECN-22-156403	06JUN2022	RK	CSD

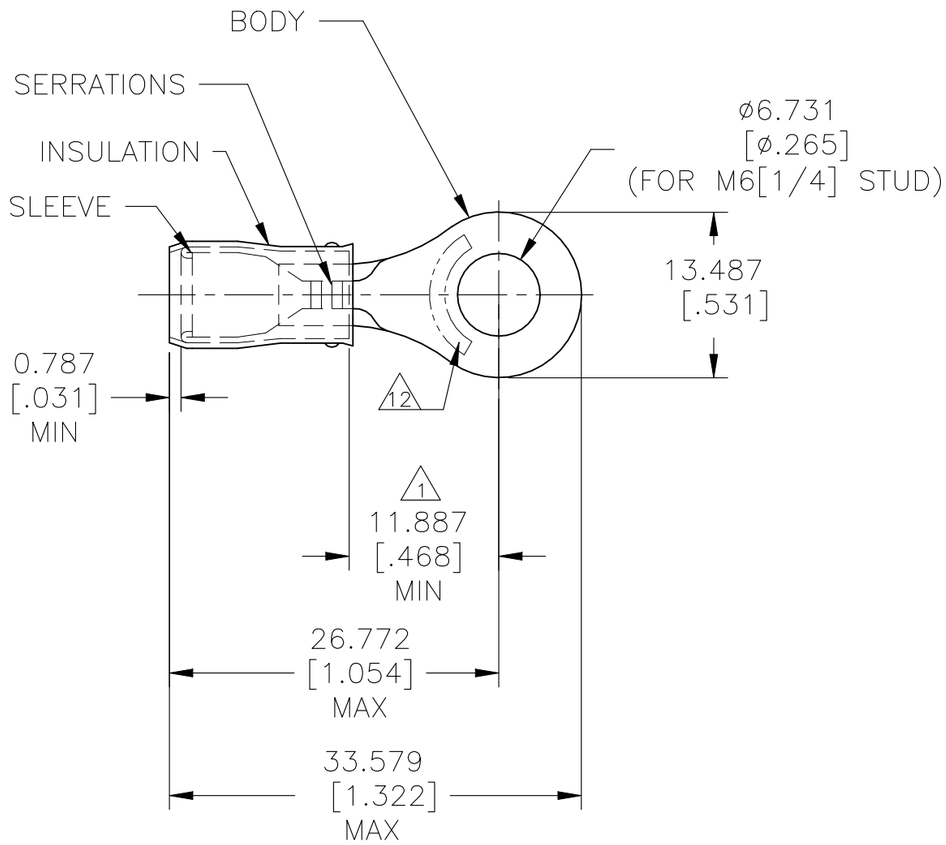

STYLE "A" - STANDARD

1. APPLIES FROM EDGE OF METAL WIRE BARREL TO CENTER OF STUD HOLE.
2. BODY MATERIAL THK 1.016±0.051 [.040±.002]
3. 105°C[221°F] MAX OPERATING TEMPERATURE
4. 300 VOLT MAX.
5. CIRCULAR MIN AREA: 2.62-6.64 mm^2 [5180-13100] SOLID OR STRANDED.
6. UL LISTED E13288 12-10 AWG STRANDED.
7. CSA CERTIFIED LR7189 12-10 AWG SOLID OR STRANDED.
8. MILITARY MS25036-157 CLASS 1.
9. NOTE DELETED
10. MATERIAL:
    BODY & SLEEVE: COPPER PER ASTM B-152
    INSULATION: NYLON PER ASTM D-4066, TYPE 1.
11. FINISH:
    BODY & SLEEVE: TIN PLATE PER ASTM B-545
    INSULATION: COLOR-YELLOW.
12. STAMP AMP ☐ SEE TABLE, APPROX AS SHOWN.

QTY	COLOR STRIPE	WIRE SIZE	FOR WIRE INSULATION OD	STAMP	STYLE	PACKAGING	PART NO.
2500 (6,7)	NONE	12-10	3.810-5.842 [.150-.230]	12-10*	"A"	ON TAPE	2-320569-3
500 (6,7)	NONE	12-10	3.810-5.842 [.150-.230]	12-10*	"A"	LOOSE PIECE	(8) 320569

THIS DRAWING IS A CONTROLLED DOCUMENT.

DIMENSIONS: mm [INCHES]

TOLERANCES UNLESS OTHERWISE SPECIFIED:
0 PLC ± -
1 PLC ± -
2 PLC ± -
3 PLC ± 0.127[.005]
4 PLC ± -
ANGLES ± 0°30'

MATERIAL (10)

FINISH (11)

DWN RAGHAVENDRA 08SEP2008
CHK T MICHIELUTTI 08SEP2008
APVD T MICHIELUTTI 08SEP2008
PRODUCT SPEC UL 486 A-B (6)
APPLICATION SPEC 114-2157
WEIGHT -

TE Connectivity

NAME
TERMINAL
RING TONGUE, NYLON, PIDG,
WIRE SIZE: 12-10 AWG

SIZE	CAGE CODE	DRAWING NO	RESTRICTED TO
A3	00779	C-320569	-

CUSTOMER DRAWING | SCALE 2:1 | SHEET 1 OF 2 | REV U4

THIS DRAWING IS UNPUBLISHED. RELEASED FOR PUBLICATION -,- .
© COPYRIGHT - By - ALL RIGHTS RESERVED.

REVISIONS

P	LTR	DESCRIPTION	DATE	DWN	APVD
	-	SEE SHEET 1	-	-	-

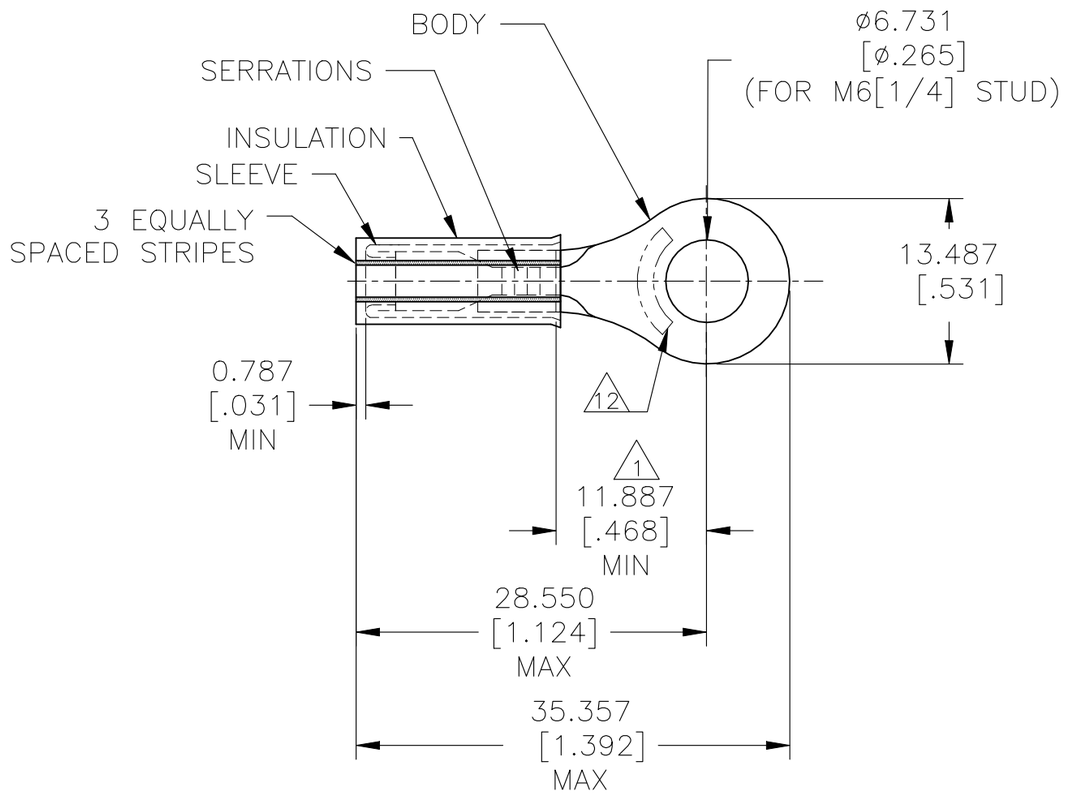

STYLE "B" - INSULATION RESTRICTING

1. APPLIES FROM EDGE OF METAL WIRE BARREL TO CENTER OF STUD HOLE.
2. BODY MATERIAL THK 1.016±0.051 [.040±.002]
3. 105°C[221°F] MAX OPERATING TEMPERATURE
4. 300 VOLT MAX.
5. CIRCULAR MIN AREA: 2.62-6.64 mm² [5180-13100] SOLID OR STRANDED.
6. MILITARY M7928/1-59 CLASS 1.
7. MILITARY M7928/1-66 CLASS 1.
8. NOTE DELETED.
9. NOTE DELETED.
10. MATERIAL:
    BODY & SLEEVE: COPPER PER ASTM B-152
    INSULATION: NYLON PER ASTM D-4066, TYPE 1.
11. FINISH:
    BODY: TIN PLATE PER ASTM B-545
    SLEEVE: NICKEL PLATE PER QQ-N-290
    INSULATION: COLOR-YELLOW.
12. STAMP AMP SEE TABLE, APPROX AS SHOWN.
13. CSA CERTIFIED STRANDED

QTY	COLOR STRIPE	WIRE SIZE	FOR WIRE INSULATION OD	STAMP	STYLE	PACKAGING	PART NO.
500 (13)	BROWN	10	3.023-5.080 [.119-.200]	10*	"B"	LOOSE PIECE	2-320569-6 (7)
500 (13)	YELLOW	12	2.413-5.080 [.095-.200]	12*	"B"	LOOSE PIECE	2-320569-5 (6)

THIS DRAWING IS A CONTROLLED DOCUMENT.

DIMENSIONS: mm [INCHES]

TOLERANCES UNLESS OTHERWISE SPECIFIED:
0 PLC ± -
1 PLC ± -
2 PLC ± -
3 PLC ± 0.127[.005]
4 PLC ± -
ANGLES ± 0°30'

MATERIAL (10)

FINISH (11)

DWN RAGHAVENDRA 08SEP2008
CHK T MICHIELUTTI 08SEP2008
APVD T MICHIELUTTI 08SEP2008
PRODUCT SPEC —
APPLICATION SPEC 114-2157
WEIGHT —

TE Connectivity

NAME
TERMINAL
RING TONGUE, NYLON, PIDG, IR,
WIRE SIZE: 12 & 10 AWG

SIZE	CAGE CODE	DRAWING NO	RESTRICTED TO
A3	00779	C-320569	—

CUSTOMER DRAWING | SCALE 2:1 | SHEET 2 OF 2 | REV U4