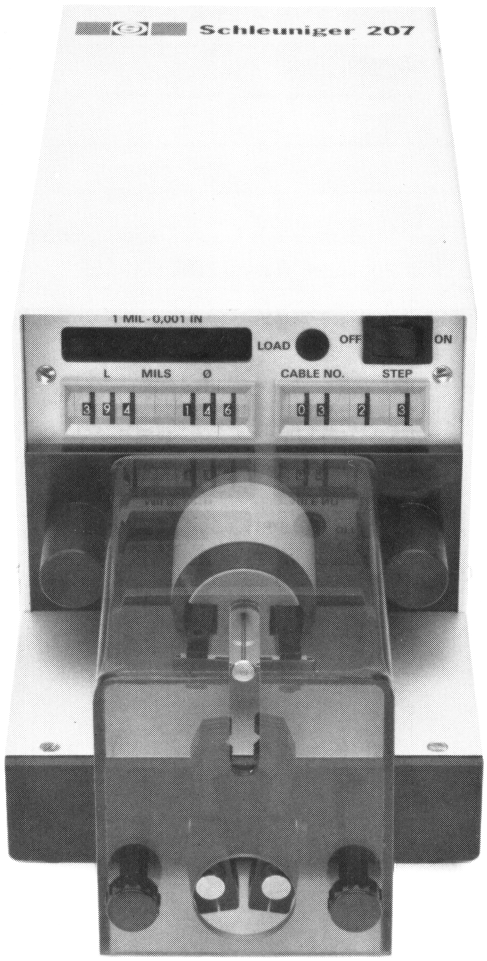

SCHLEUNIGER 207

Operating Instructions

DR. SCHLEUNIGER & CO.

Schöngrünstrasse 27 CH-4501 Solothurn (Switzerland) Tel: 065 22 03 21 Telex: 934335 Fax: 065 22 63 20

SCHLEUNIGER USA INC.

A SUBSIDIARY OF SCHLEUNIGER GROUP SWITZERLAND

150 Dow St. Tower 4 Manchester, NH 03101 Tel: 603-668-8117 Telex: 6503417298 Fax: 603-668-8119

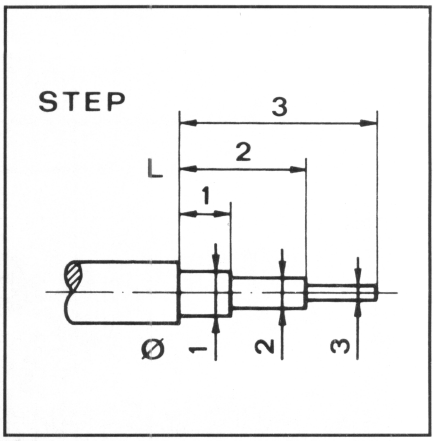

Program sheet

Cable No.	Cable	Description/Type	Lengths/Diameters						Date	Remarks
			Step 1		Step 2		Step 3			
			L	Ø	L	Ø	L	Ø		
01										
02										
03										
04										
05										
06										
07										
08										
09										
10										
11										
12										
13										
14										
15										
16										
17										
18										
19										
20										
21										
22										
23										
24										
25										
26										
27										
28										
29										
30										
31										
32										
33										
34										
35										
36										
37										
38										
39										

Operating Instructions

Dear customer

You have certainly made a good choice. The SCHLEUNIGER 207 is the most advanced coaxial cable stripper available. The SCHLEUNIGER 207 can precisely strip coaxial cables with up to 3 stages in one operation. But that is not all, the SCHLEUNIGER 207 can store all the stripping values for a total of 39 different coaxial cables. Once the machine is programmed, the time required for changeover when stripping different cables is under 3 seconds. Just switch to the desired cable no., and the SCHLEUNIGER 207 works exactly according to the values stored. In these operational instructions — also available in German and French — you will find exact instructions for use. Before putting the machine into operation, please read these instructions carefully, so that you get to know your SCHLEUNIGER 207 inside and out — it will reward you for this reliability. Should you have any questions, we are of course readily available with guidance and help at any time.

Yours truly,
Dr. Kurt Schleuniger

The advantages of the SCHLEUNIGER 207

The SCHLEUNIGER 207 can strip most of the coaxial cables available, up to a diameter of 7 mm (.275 in.). The stripping head of the SCHLEUNIGER 207 is designed with all of the technical refinements to guarantee the best possible operation. The free opening of the stripping head allows the conductors to be fed directly from above. As soon as the cable touches the sensor, the machine cycle begins. The gripper jaws centralize and hold the cable, the programmed stripping being carried out fully automatically within seconds.

The SCHLEUNIGER 207 can store all of the stripping values for a total of 39 different cables. The stripping values stored can be called up at random and remain stored for over 2 years without electricity.

The stripping diameters can be set to within .01 mm (.001 in.) on the SCHLEUNIGER 207. Thus, optimal stripping quality is guaranteed and damage to the conductors is eliminated. Corrections due to cable tolerances can be carried out with the thumbwheel switches.

The stripping blades, made of carbide, make flawless stripping of all typical insulating materials with low wear on the blades. For extreme use, blades of carbide, titanium coated can be used.

The SCHLEUNIGER 207 works purely electrically and uses only 80 VA.

The few parts subject to wear on the machine, especially the stripping blades and the cable centralizers, can be replaced quickly and easily. The SCHLEUNIGER 207 is light, weighing only 6 kg (13.2 lbs.) and can be easily transported.

Maintenance and cleaning tasks are few. The SCHLEUNIGER 207 is easily accessible for maintenance work.

The SCHLEUNIGER 207 works extremely quietly and fulfills all the safety directives required.

The electronic controls guarantee flawless functioning of the machine for years without problems.

Service arrangements

Please read the "Certificate of Guarantee" which was shipped with your machine. This certificate will explain your warranty completely. We cannot undertake any liability for damage which comes about through abuse. In your best interest, please do not perform any alterations or modifications to the machine.

The SCHLEUNIGER service department is available throughout the week. Call us or your nearest representative when a problem arises which you cannot solve yourself. Describe precisely what is not functioning properly on your SCHLEUNIGER 207. Normally, our experts can solve the problem with instructions on the telephone. Thus, possible downtime can be kept to an absolute minimum.

Delivery check

After receiving the machine, please check whether the delivery conforms to your order and if the package is damaged in any way. The check list below shows exactly what should have been received with your machine. When this has been checked, please send back the certificate of guarantee, signed by an authorized person, immediately. Any damage which may have occurred should be reported to the transportation company responsible, and a damage claim form should be completed.

Material checklist

Normal equipment
SCHLEUNIGER 207 stripping machine for coaxial cables, ready for operation.
1 power cord
1 tube of grease (91)
1 small brush (92)
1 large brush (93)
1 calibration standard 3 mm (.118 in.) (94)
4 hex keys 1.5/2/2.5/3mm (95)
1 program sheet
2 stripped sample cables (99, 100)
2 certificates of guarantee (please sign 1 copy and return to the manufacturer)
1 operating manual

Special accessories (as per separate order)
1 calibration set (90, 96, 97, 98)

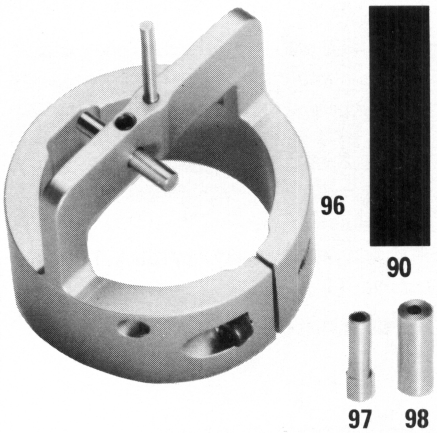

Transportation procedures

The SCHLEUNIGER 207 is delivered to you in a factory approved package.

IMPORTANT!
Keep the original package — it offers protection in case the machine has to be transported later. If the machine is transported, make sure that original packaging is used and that the foam spacer is placed between the gripper jaws and the stripping head.

Please follow these operational instructions exactly when starting operation of the machine. For understandable reasons, we cannot undertake any liability for improper operation.

General description of the machine
With the semi-automatic SCHLEUNIGER 207, you can strip single stage wires and coaxial cables up to diameters of 7 mm (.275 in.) and lengths of up to 20 mm (.787 in.) with up to 3 stages in one operation. Of course, it is also possible to strip simple cables with only one insulation layer and thus attain optimal use of the machine. The SCHLEUNIGER 207 is easily programmable and stores a total of 39 different stripping programs.

Typical SCHLEUNIGER 207

— after inserting the cable to be stripped into the machine, all the operations of the three stages of stripping are performed, which improves the production rate and saves valuable time
— accurate repeatability when used properly
— no mechanical adjustments necessary when changing the dimensions of the cables
— simple adjustment of the stripping values
— the stripping values stored can be called up at random and are retained even after replacing the blades or after a power failure
— the SCHLEUNIGER 207 is a light and portable piece of bench-top equipment, is very quiet, and does not use compressed air
— can be connected to any normal 110–120 V/50 or 60 Hz, 200–240 V/50 or 60 Hz socket
— the electronics section can be lifted off and accessibility to the electrical and mechanical parts is unobstructed, which considerably simplifies the maintenance.

Starting operation of the SCHLEUNIGER 207

Unpacking and installation
Remove machine from packaging.
Remove safety shield (46) by removing the two safety shield mounting screws (52).
Remove the foam spacer between the gripper jaws (8) and the stripping head (14).
Replace safety shield (46).
Place the machine on a stable working surface in such a way that the front edge of the SCHLEUNIGER 207 is flush with the edge of the table and the waste material from the stripping can fall freely into a suitable container.
Attention: The ventilation holes in the bottom of the machine must be clear of obstructions.
Set the voltage selector (19) to the correct power supply voltage.
Connect the power cord: the SCHLEUNIGER 207 is now ready for use.
Switch On/Off switch (1) to On.

Operational test
You will find two sample cables packed with the accessories for the SCHLEUNIGER 207. We have tested your machine at the factory and stripped these two cables. The stripping values are stored in program 01 (for the thinner cable) and 02 (for the thicker one). After putting the SCHLEUNIGER 207 into operation in accordance with the instructions above, you can test the stripping quality with the two sample cables as follows: Switch the cable no. switches (P) onto cable No. 01. Make sure the step switch (S) is set to step 3. Feed the unstripped end of the thinner sample cable through the gripper jaws (8) (Fig. 1). As soon as it touches the sensor, the automatic cycle begins and the cable is stripped in accordance with the values given by the supplier. Then switch the cable no. (P) to cable no. 02 and repeat the stripping action with the thicker sample cable. The machine should strip the cable samples just like the factory stripped ends.

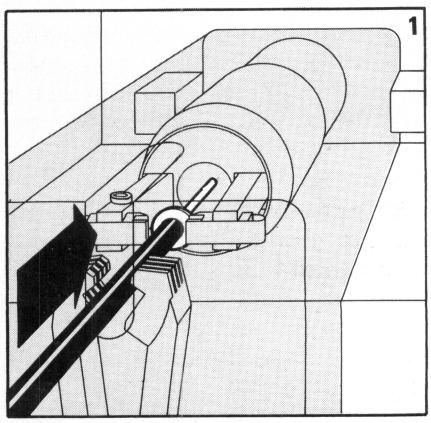

Functional description of the SCHLEUNIGER 207

The cable to be stripped is inserted manually as horizontally as possible between the gripper jaws (8) and the stripping blades (11) upto the sensor (9). As soon as the cable touches the sensor (9), the stripping cycle begins (Fig. 1).
The two gripper jaws (8) hold the cable exactly in the center of the stripping head (14). The sensor retracts (Fig. 2).
The stripping head (14) goes to the first programmed position for the stripping length L1. The stripping blades (11) close while rotating to the programmed stripping diameter. At the same time the cable centralizers (10) close in order to centralize the cable (Fig. 3).
The stripping head (14) pulls the insulation off after cutting through it (Fig. 4).
The 2nd and 3rd stages of stripping are carried out in accordance with the same work principle.
After the stripping cycle is completed, the gripper jaws (8) release the cable and the sensor (9) returns to its original position.

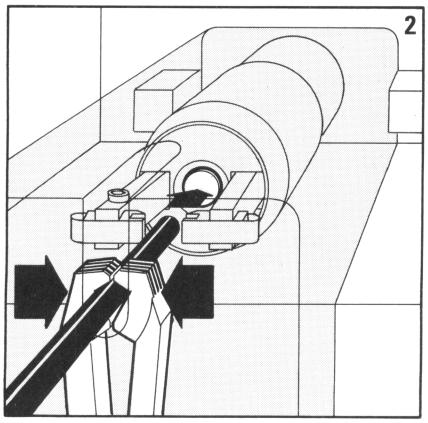
2

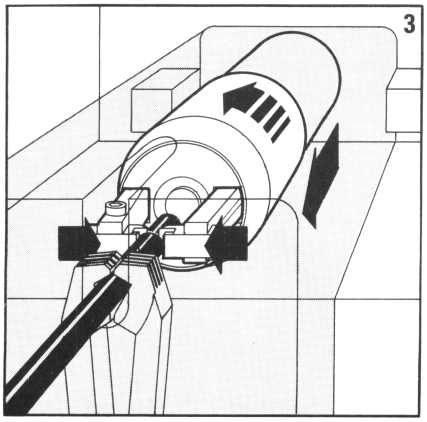
3

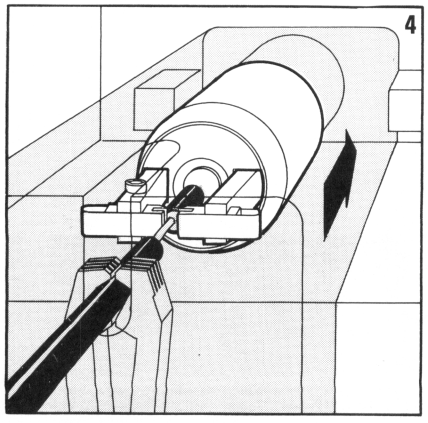
4

Programming

Switch on On/Off switch (1) to On.
Set cable no. switches (P) to a free cable no.

Programming scheme:
Please refer to Fig. #5. This diagram shows the measuring points for the lengths and diameters.

Step 1:
Set step switch (S) to 1.
Pre-select stripping length L1 on (L) length switches in 0.1 mm (.001 in.) increments
Pre-select stripping diameter ∅ 1 on (D) diameter switches in 0.01 mm (.001 in.) increments

CAUTION: If the stripping diameter values are too small, then the stripping blades can be damaged. Therefore, you should choose higher diameter values when programming the stripping diameter and correct them later if necessary.
Press the LOAD switch (6). The stripping values are now stored in memory and appear on the LED display (7).
Try stripping the cable now and check the results. Make any necessary adjustments with switches (L) and (D). Press the LOAD switch (6) to store the new values.

Step 2:
Set step switch (S) to 2.
Input stripping length L 2 and stripping diameter ∅ 2.
Press LOAD switch (6).
Try stripping the cable.
Check and correct if necessary.

Step 3:
Set step switch (S) to 3.
Input stripping length L 3 and stripping diameter ∅ 3.
Press LOAD switch (6).
Try stripping the cable
Check and correct if necessary.

The stripping values are now stored in memory and can be called up at random by cable no. Enter the values stored onto the program record sheet. The repeatability is thus guaranteed and at the same time you have good control over the programs.
A total of 39 different programs can be input and stored in this way. From No. 40 on, the data is superimposed on No. 00.

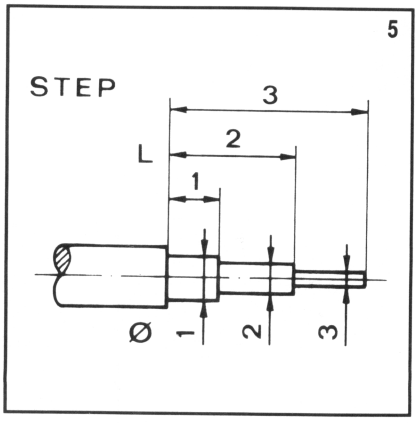

Partial stripping of coaxial cables

After programming the SCHLEUNIGER 207 for a coaxial cable as directed in the Programming section (steps 1, 2 and 3), the partial strip options listed below can be selected with the step switch (S). Simply move the step switch(S) from step 3 to step 5, 6 or 7. The partial strip switch (A) can now be used to control the partial strip length.

with step 5:
Cut into dielectric without pulling off.
Full strip only on outer jacket.

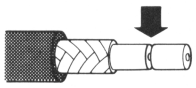

Partial strip switch (A) not used.

with step 6:
Full strip only on dielectric.
Partial strip option on outer jacket only.

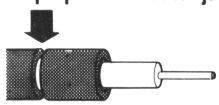

Partial strip switch (A) on 0.

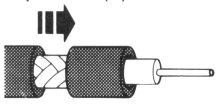

Partial strip switch (A) on 1 to 7.

with step 7:
Cut into dielectric without pulling off.
Partial strip option on outer jacket only.

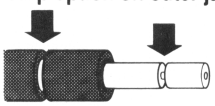

Partial strip switch (A) on 0.

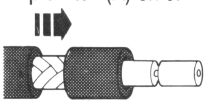

Partial strip switch (A) on 1 to 7.

Partial stripping of single cables

After programming the SCHLEUNIGER 207 for a single cable as directed in the Programming section, step 1, the partial strip options listed below can be selected with the step switch (S). Simply move the step switch from step 1 to step 4. The partial strip switch (A) can now be used to control the partial strip length.

with step 4.
Cut into insulation only.

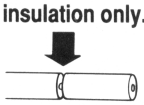

Partial strip switch (A) on 0.

Partially pull off insulation.

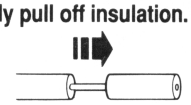

Partial strip switch (A) on 1 to 7 (= pull off-length 1 to 7 mm). (.039 in. to .275 in.)

Full stripping of insulation.

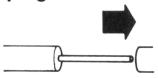

Partial strip switch (A) on 8 or 9.

Operating the machine

Before starting work check...

...that the stripping values match the cable.

...that there is no debris between the stripping blades (11) and the cable centralizers (10).

...the cutting edges of the stripping blades (11) with a magnifying glass.

...the values stored (7) (LED display) compared with your program record sheet.

Inserting the cable

Insert the cable to be stripped through the gripper jaws (8) onto the sensor (9). Make sure that the cable is inserted horizontally and uniformly, quickly and gently, and that it touches the sensor lightly in the middle. As soon as the stripping action is started, the gripper jaws (8) hold the cable and you only need to hold it gently (Fig. 1).

Failures

Switch the machine off and re-check the points listed under "Before starting work, check...". Further possible causes for failure can be found in the troubleshooting section.

Safety regulations

Never operate the machine without the safety shield (46) in place. Before removing or lifting the main cover (34), pull out the power cord. When leaving the place of work, switch the machine off.

Initial calibration of the machine

Each SCHLEUNIGER 207 is checked out thoroughly before delivery. Re-calibration necessary through maintenance work, repairs etc., may only be carried out by trained personnel.

Blade change and calibration

Good stripping blades (11) are the most important prerequisite for first class stripping quality. The SCHLEUNIGER 207 is set up in such a way that the stripping blades (11) can be replaced without the values stored in memory being affected.

Important: The following method is only possible if the gripper jaws have not been moved from the factory set position. If you have serviced the grippers in any way, you must first re-align them as described in the section <adjusting the grippers with the calibration set>.

Switch cable no. switches (P) to 00.

Switch step selector (S) to 1.

Switch length switches (L) to 000.

Switch diameter switches (D) to 3.00 mm (.118 in.) (= ∅ calibration standard) (94).

Press LOAD switch (6).

Switch off main switch (1).

Remove safety shield (46) by loosening the two safety shield mounting screws (52)

Loosen the blade setscrews (45) with the hex key SW 2.5 (Fig. 6).

Remove the old stripping blades (11) and clean the cable centralizers (10). Attention: do not mix up the cable centralizers (10).

Put in the new stripping blades (11) together with the cable centralizers (10). Make sure that the cable centralizer arms (13) fit into the notch of the cable centralizers (10).

IMPORTANT!
Switch step selector (S) to 0, so that the stripping head does not rotate!

Lightly tighten the blade setscrews (45) so that the stripping blades (11) can still be moved without to much free play.

Push both stripping blades (11) outwards from the center. Switch on main switch (1).

Insert the 3 mm (.118 in.) calibration standard (94) through the gripper jaws (8) from the front onto the sensor (9).

As soon as the calibration standard (94) touches the sensor (9), the blade holder arms (12) close. The gripper jaws (8) hold the calibration standard (94) tightly and the blade holder arms (12) with the stripping blades (11) and the cable centralizers (10) close to the set stripping diameter 3.00 (.118 in.) (∅ calibration standard). Slide the two stripping blades (11) until the cutting edges touch the calibration standard (94) lightly and then tighten the blade setscrews (45) lightly (Fig. 7).

Switch step switch (S) to step 1 — the calibration standard (94) will be released.

Switch off main switch (1).

Carefully tighten blade setscrews (45).

Attention: over tightening the blade setscrews (45) too much could lead to damage of the dovetail shaped clamp on the blade holder arms (12).

Replace safety shield (46).

Switch on main switch (1).

Select a cable no. and try stripping with the corresponding cable.

Check stripping quality.

If the result of the stripping indicates the values stored in memory must be changed, then the blades have not been set exactly and the whole blade change procedure must be repeated.

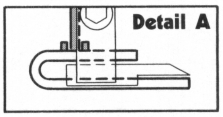

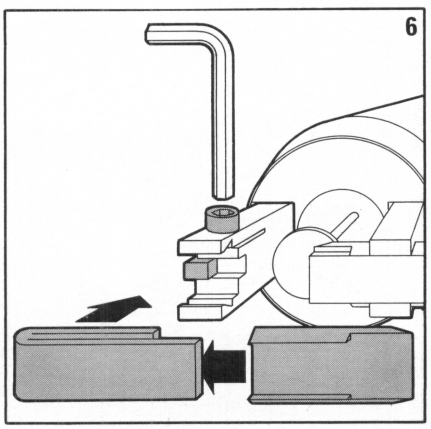

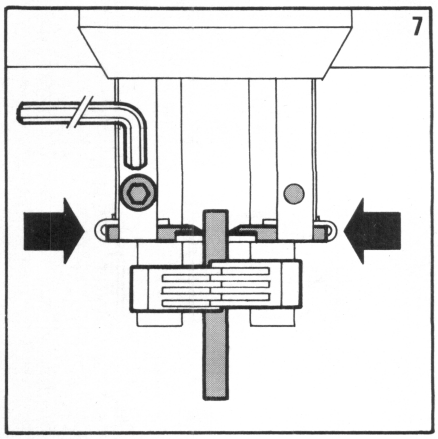

Adjusting the blades and cable centralizers with the calibration set

CAUTION: The following procedure is only necessary if the cable centralizers (10) have been changed or if the stripping head (14) has been disassembled for service. You must have the calibration set listed on page 4 under special accessories 90, 96, 97, 98, in order to perform this procedure.

Switch off main switch (1).
Remove power cord.
Remove main cover (34) by unscrewing the 6 screws.
Remove safety shield (46) by removing the two safety shield mounting screws (52).
Lift electronics panel upwards and back.
Remove spring (54) and push sensor (9) back (Photo 12).
Slide cover sleeve (16) back. Loosen setscrew on head disc (15) and pull head disc off forwards (Fig. 8).
Push the slide carriages all the way back (Photo 12).
Loosen the blade setscrews (45) slightly with the hex key SW 2.5 and push the stripping blades (11) away from the center to the outside (Fig. 9).
Loosen the set screws (28) of the eccentrics (27) in such a way that the eccentrics (27) can still be turned under slight tension (Fig. 10).
Now turn both eccentrics (27) in such a way that the cable centralizers (10) are in the extreme outside position (Fig. 10).
Push the calibration fixture (96) onto the stripping head (14). Make sure that the cross pin of the calibration fixture (96) comes to rest between the blade holder arms (12) and that the holes for access to the eccentrics (27)are aligned properly.
Turn the leadscrew (57) clockwise until the blade holder arms (12) touch the cross pin of the calibration fixture (96) from both sides at the same time (if necessary, bring the calibration fixture (96) into the correct position by turning it slightly). Now the calibration fixture (96) is adjusted and the blade holder arms (12) are in the correct position (Fig. 11).
Lightly tighten calibration fixture (96) with the setscrew (56) as shown in (Fig. 11).
Open the blade holder arms (12) again by turning the leadscrew (57) and slide the brass sleeve (97) with the larger diameter first over the center pin of the calibration fixture (96) (Fig. 11).
Turn the leadscrew (57) until the blade holder arms (12) touch the cross pin of the calibration fixture (96) again.
Turn the eccentrics (27) counter clockwise until both centralizers (10) lightly touch the smaller diameter of the brass sleeve (97).
Turn the leadscrew (57) by hand until the two blade holder arms (12) are completely opened. Carefully tighten the setscrews (28) of the eccentrics with the hex key SW 2.5.
Now check, by turning the leadscrew again, whether the cable centralizers (10) touch the brass sleeve (97) on the smaller diameter at the same time. Push the brass sleeve (97) slightly forwards in this position until the larger diameter touches the cable centralizers. Now push both stripping blades (11) against the larger diameter of the brass sleeve (97) and carefully tighten the blade setscrews (45). Open and close the blades (11) with the leadscrew (57) while watching that both blades (11) touch the brass sleeve (97) at the same time.
Remove calibration fixture (96) and re-assemble.

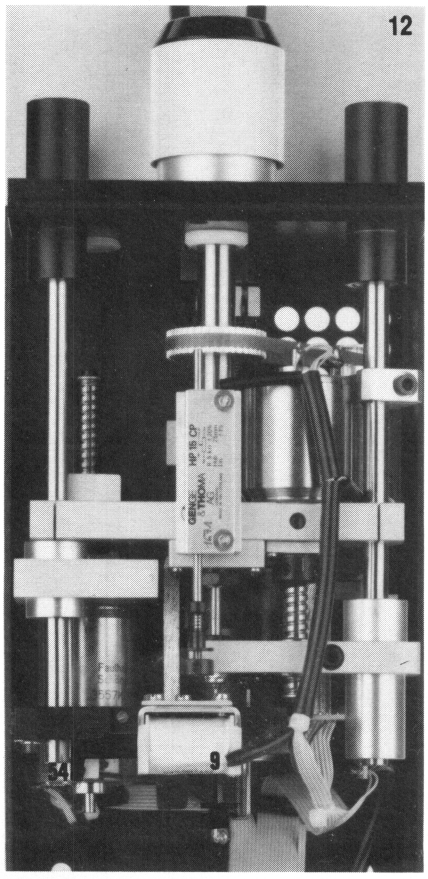

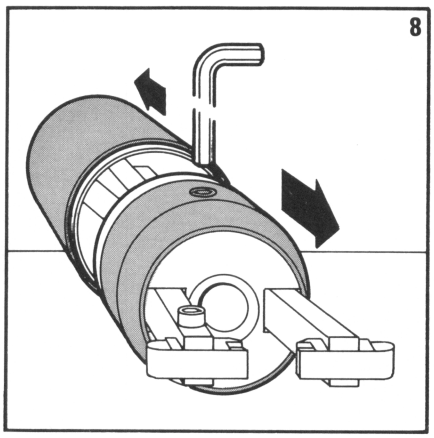

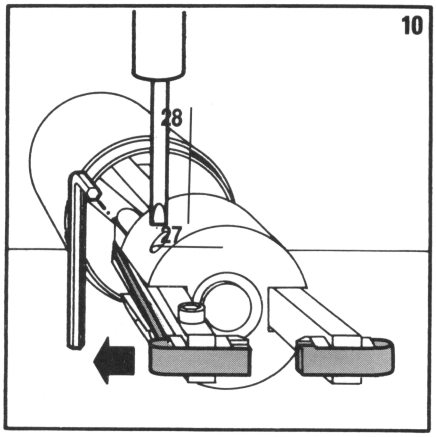

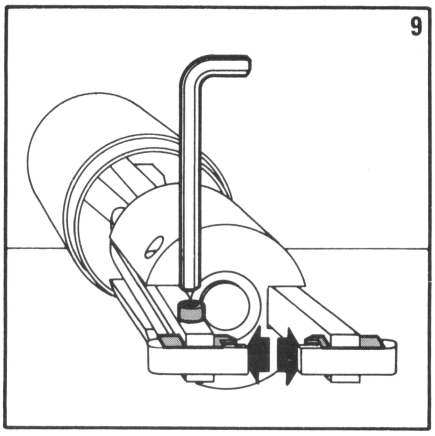

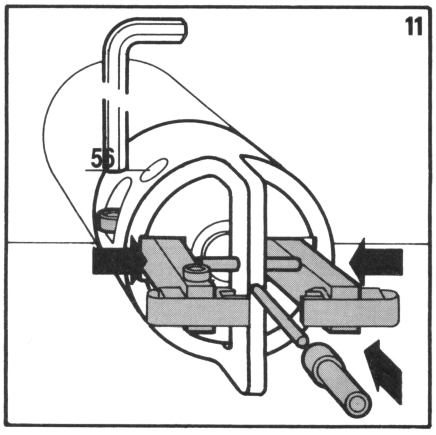

Adjusting the grippers with the calibration set

CAUTION: The following procedure is only necessary if the gripper jaws (8) have been changed or dis-assembled for service. You must have the calibration set listed on page 4 under special accessories 90, 96, 97, 98 in order to perform this procedure.

Switch main switch (1) to Off position.
Remove power cord.
Remove main cover (34) by unscrewing the 6 screws.
Remove safety shield (46) by removing the safety shield mounting screws (52).
Lift electronics panel upwards and back.
Remove spring (54) and push back the sensor (9) (Fig. 12).
Push cover sleeve back (16). Loosen setscrew on head disc (15) and pull head disc (15) off forwards.
Push the slide carriages all the way back.
Push the calibration fixture (96) onto the stripping head (14) and tighten it as shown in Fig. 11.
Slide the brass sleeve (98) over the center pin of the calibration fixture (96).
Loosen the gripper jaw setscrews (47) and the gripper holder setscrews (48).
Pull back the gripper solenoid shaft and insert the 8 mm (.315 in.) wide gauge (90) between the two points shown in Fig. 13.
Carefully pull the stripping head (14) all the way forward by hand.
Lightly push both gripper jaws (8) onto the brass sleeve (98) of the calibration fixture (96).

IMPORTANT!
Between the front of the cable centralizers (10) and the front of the gripper jaws (8) there must be a distance of 9.5 mm (.375 in.) (stripping head (14) all the way forward (Fig. 14). The leaves of the gripper jaws (8) must match as shown in Fig. 15.
First tighten the gripper jaw fixing screws (47) and then the gripper jaw setscrews (48) (Fig. 16).

Check: To check for proper adjustment, first remove the width gauge (90). Slowly close the gripper jaws (8) by pulling the gripper solenoid shaft from behind and check from the front whether the upper and lower contact areas of each gripper jaw (8) touch the calibration sleeve (98) at the same time (Fig. 16).
Remove calibration fixture (96).
Re-install the spring (54).
Re-assemble the machine and test for proper operation.

Sensor adjustment

This adjustment is only necessary if the stripping lengths are incorrect or the sensor assy. has been dis-assembled for service.
Switch main switch (1) to Off.
Remove power cord.
Remove main cover (34) by unscrewing the 6 screws.
Remove safety shield (46) by removing the safety shield mounting screws (52).
Pull back disc (32) and loosen the setscrews (31) of the disc (32) in such a way that the disc can be slid over the pin (49) with a little amount of friction.
Carefully pull the stripping head (14) all the way forward by hand (Fig. 17).
By turning the leadscrew (57), set the stripping blades (11) in such a way that the distance between the cutting edges is about 7 mm (.275 in.) (Fig. 18).
Slide the disc (32) on the pin (49) until the distance from the front of the sensor (9) to the cutting edges of the stripping blades (11) is 0.5 mm (.020 in.) (Fig. 18).
Tighten the two setscrews (31) of the disc (32).
By slightly loosening the screw (30) and pushing the sensor stop lever (29) forwards or backwards, the travel of the sensor (9) can be controlled. The travel should be 0.8 – 1.2 mm (.031 in. – .047 in.) (Fig. 18).
To increase sensor travel: push lever (29) to the right (Fig. 17).
To decrease sensor travel: push lever (29) to the left (Fig. 17).

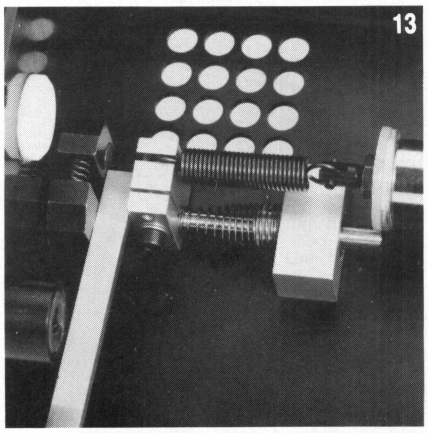

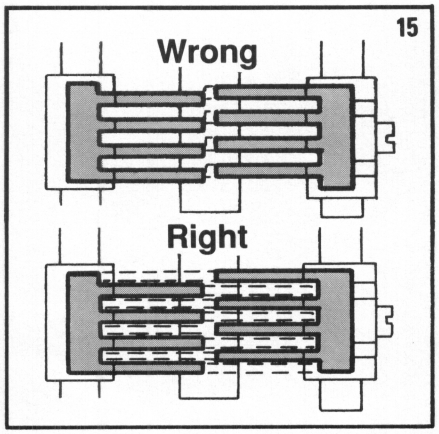

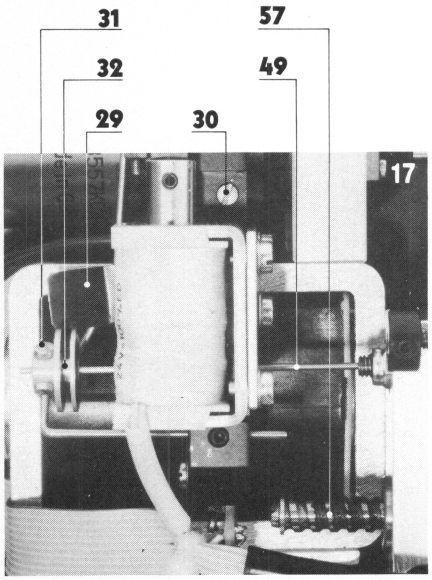

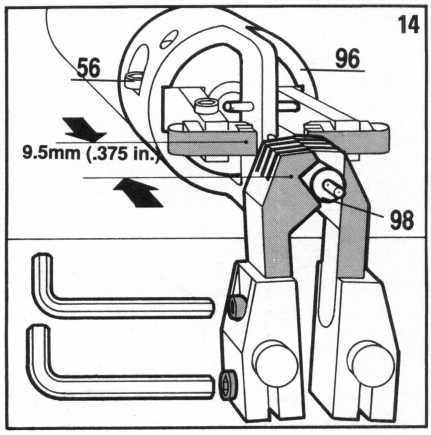

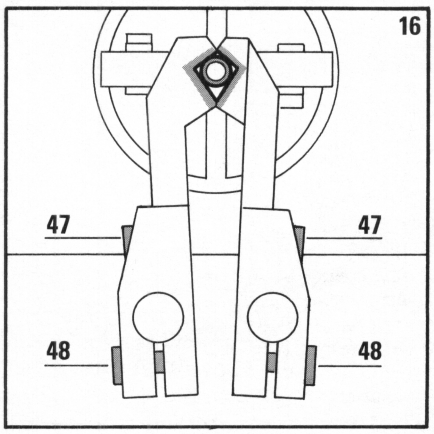

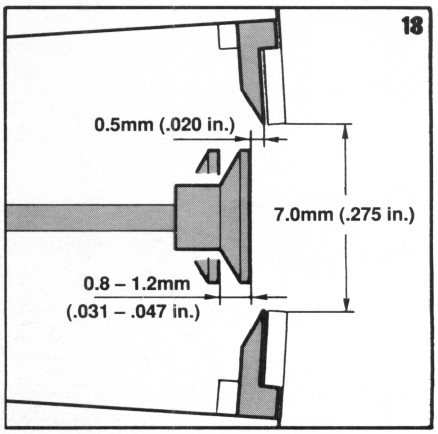

Electronic section

General technical description of the electronic section (see Fig. below)

After the machine has been switched on, the dimensions for the pre-selected cable no. and step no. appear on the LED display (10). At the same time, the stripping blades open and position themselves at the right stripping length in accordance with the step selected. In this position, it is possible to alter the values stored in the memory by means of the LOAD switch (1). These values are entered into the memory and then onto the LED display digitally by means of the thumb wheel switches (2). In order for the values not to be lost when the machine is switched off, the memory is connected to a battery which automatically recharges during operation.

The "brain" of this machine is an EPROM (7) program. The EPROM retrieves the data in the memory (9) and then controls all the functions of the stripping action according to the stored program.

The opto-sensor (4), which is at the other end of the sensor, switches on a Start/Stop switch (5) after the sensor has been touched lightly. Then, a sequencer (6) is switched on which enables the individual program steps to be carried out in accordance with the cable no. and step no. selected.

So that no undesired values can be stored during operation, all inputs (2) are blocked immediately after the start by an electronic switch (8).

Then, the sensor solenoid is switched on via the amplifier (16). The cable gripper is switched on — after a small delay — via the amplifier (17).

The EPROM (7) now selects the correct data from the memory and sends the data to the digital-analog converter (11) with analog data memory (12).

The two amplifiers (13 and 14) with positioning feedback of the motors for the length and the diameter guarantee repeatability and correct positioning of the stripping blades.

The limit circuit (18) prevents damage to the mechanical and electrical parts from entering data beyond the range of the machine.

After the cycle has been completed, the Start/Stop switch (5) is reset. The SCHLEUNIGER 207 is now ready for another cycle.

Electrical Block Diagram

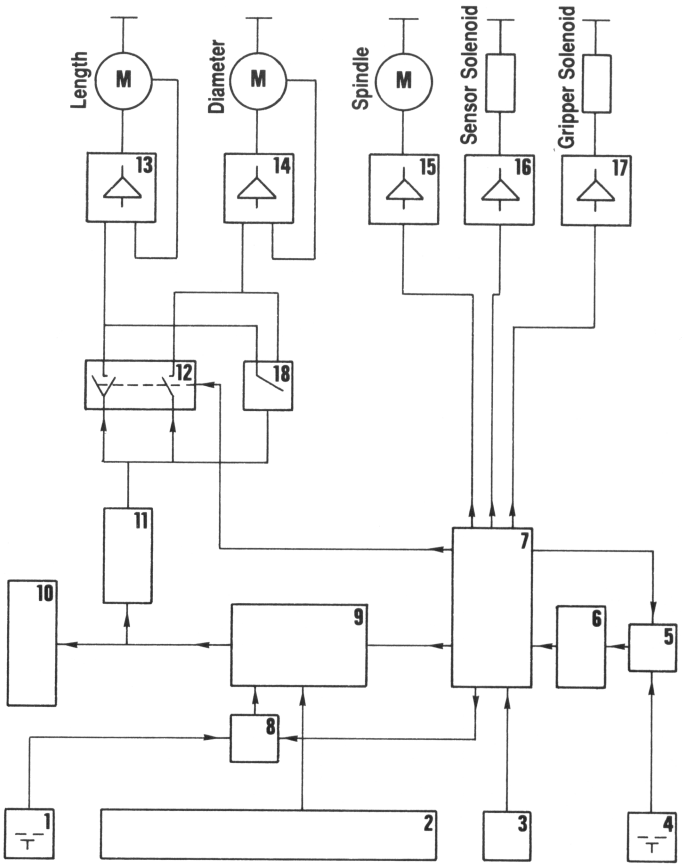

Key for electrical block diagram

1 Load switch
2 L, ∅, and cable no. switches
3 Step switch (S)
4 Sensor
5 Start/Stop switch
6 Sequencer
7 Eprom
8 Electronic switch
9 RAM
10 LED Display
11 D/A converter
12 Analog switch with memory
13 Amplifier for length motor
14 Amplifier for diameter motor
15 Amplifier for spindle motor
16 Amplifier for sensor solenoid
17 Amplifier for gripper solenoid
18 Limit circuit

Maintenance

The maintenance required for the machine is minimal, but must be strictly adhered to for trouble-free operation of the machine. This is a requirement for the validity of the guarantee. Maintenance needed on the machine will mainly depend upon the material being stripped and on the amount of stripping waste being generated.

Lubrication chart (see Fig. below)

A) Lubricate lightly once every two months with KLUEBER ISOFLEX LDS 18 SPECIAL A.

B) Clean the spindles once every two months with a particlefree cleaning rag and lubricate them lightly along the whole length with KLUEBER ISOFLEX LDS 18 SPECIAL A.

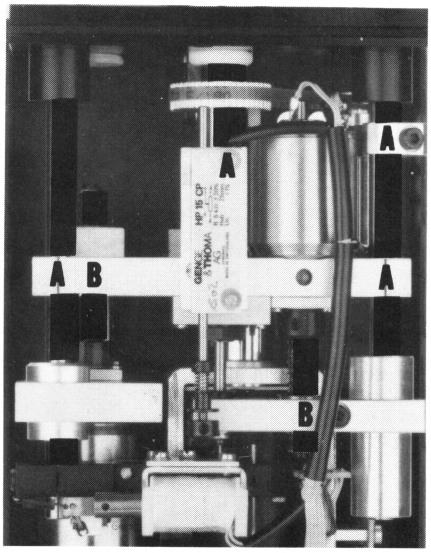

Maintenance checklist (daily)

External cleaning

Remove safety shield (46) and remove stripping waste from the interior: daily or depending upon the amount of waste.

Warning:
Do not use compressed air, in order to prevent very fine particles from penetrating into the stripping head.

Stripping blades and cable centralizers

Squeeze blade holder arms (12) towards the center and the cable centralizers (10) towards the outside: clean any waste away with small brush, if necessary blow out carefully with compressed air (see warning above).

Check free operation of the cable centralizers (10) (if the play is restricted due to blockage from stripping waste, exact stripping is no longer possible.

Check sharpness and condition of the stripping blades with a magnifying glass. Replace worn stripping blades (11).

Gripper jaws

Clean gripper jaw surfaces with a small, hard brush.

Troubleshooting checklist

Symptom	Possible cause	Solution
1. **Stripping head comes** forwards with closed stripping blades, opens and goes back, or stripping cycle is not carried out in the proper sequence	Check whether programming was carried out properly according to the programming scheme	program correctly in accordance with the programming scheme (see programming)
1.1 **Stripping head does not rotate**	Belt broken or off of pulleys	replace or re-install belt and adjust
2. **Cable** spins out of the stripping head central position	Check:	
	the free play of the cable centralizers	clear any obstruction between the cable centralizers (10) and blades (11) with the brush provided
	the condition of the stripping blades	change the stripping blades (11) (see blade change and calibration)
	the toothed surface of the cable centralizers	clean the toothed surface of the cable centralizers (10)
3. **Variations in stripping length**	Check:	
	if the position of the disc on the end of the sensor pin has changed	re-adjust position of disc (see sensor adjustment)
	if the travel of the sensor is correct	adjust sensor (see sensor adjustment)
	if the cable is being inserted irregularly	insert the cable uniformly (see inserting the cable)
4. **Unsatisfactory stripping quality**	Check:	
rough cutting of cable	check free play of the cable centralizers	remove waste between blades (11) and cable centralizers (10) with small brush
incomplete stripping action	blunt or broken cutting edges on blades	change stripping blades (11) (see blade change and calibration)
coaxial braid is deforming insulation material	gripper jaws not centered properly	adjust gripper jaws (8) with calibration set (see adjusting gripper jaws with the calibration set)
	cable centralizers are not centered properly	adjust position of cable centralizers (10) with eccentrics (see adjusting the blades and cable centralizers with the calibration set)
	blunt stripping blades	replace stripping blades (11) (see blade change and calibration)
cable not cut through on one side	one or both stripping blades out of position/ or one or both cable centralizers out of position	adjust position of the stripping blades (11) and cable centralizers (10) with the calibration set (see adjusting the blades and cable centralizers with the calibration set)
	low cable quality (highly eccentric)	call your cable supplier
5. **Machine cycle cannot be initiated**	travel of the sensor is too small	adjust the sensor travel (see sensor adjustment)
6. **Sensor does not return or only comes back slowly**	sensor block not centered on axis	adjust the sensor block position
	sensor pin dirty due to grease, oil or waste from stripping	clean the sensor pin
	spring (54) is disconnected	reconnect or replace spring (see sensor adjustment)
	sensor solenoid linkage displaced from sensor disc (32)	re-install linkage into sensor disc (32)
6.1 **Insufficient contact**	spring (54) has too little tension	move spring mounting arm or replace spring (54)

Sympton	Possible cause	Solution
7. **Cable not held firmly enough by gripper jaws**	gripper jaws not clean	clean gripper jaws (8)
	stripping waste restricts movement of grippers	remove stripping waste
	control of gripper solenoid faulty	return machine to manufacturer
	gripper does not have enough spring tension	move gripper solenoid back by loosening the two setscrews on the base and sliding solenoid back
8. **Gripper jaws do not open**	improper calibration of the gripper jaws has caused gripper solenoid shaft to get stuck in the closed position	switch machine off, remove metal cover (34). Lift electronics panel back, push shaft of gripper solenoid forward and re-adjust (see adjusting the grippers with the calibration set)
9. **Electrical faults**		
Machine will not turn on (LED display not lit)	fuse blown	replace fuse (20) and check for cause
Machine not functioning properly	wrong voltage selected	reset voltage selector (19) to proper power supply voltage
Cycle cannot be initiated	broken wire connection	check all wires and terminations

Spare parts list

Item No.	Description	Qty.	Order No.	FIG Ref. No.
1	Safety shield	1	03 – 0206	2 – 46
2	Mounting screws for safety shield	2	B 193 M4 X 6	2 – 52
3	Gripper jaws	2	04 – 0204	2 – 8
4	Gripper jaw holder	2	04 – 0202	2 – 17
5	Cable centralizers	2	04 – 0236	2 – 10
6	Spring for cable centralizer lever	1	04 – 0246	11 – 53
7	Carbide baldes	2	04 – 0296	2 – 11
8	Carbide blades, titanium coated	2	04 – 0296 T	2 – 11
9	Spring for sensor solenoid	1	04 – 0220	11 – 54
10	Belt	1	T 2.5 X 180	11 – 55
11	Fuse 0.630 AMP at 110 V ± 10%, 0.315 AMP at 220/240 V ± 10%	1	Fuse	2 – 20
12	Tube of grease KLUEBER ISOFLEX LDS 18 SPECIAL A	1	KLUEBER	1 – 91
13	Large brush	1	L. brush	1 – 92
14	Small brush	1	S. brush	1 – 93
15	Calibration standard 3 mm (.118 in.)	1	04 – 0298	1 – 94
16	Set of hex keys (1.5/2/2.5/3 mm)	1	Hex set	1 – 95
17	Calibration set incl. fixture 2 sleeves ∅ 3.3/3.9 mm, ∅ 5.2 mm, 8 mm gauge	1	Cal. set	90, 96, 97, 98
18	Brass sleeve ∅ 3.3/3.9 mm combination for blade/centralizer calibration	1	3.3/3.9 mm	1 – 97
19	Brass sleeve ∅ 5.2 mm for gripper calibration	1	5.2 mm	1 – 98
20	Spring for blade holder arms	1	04 – 0245	11 – 56

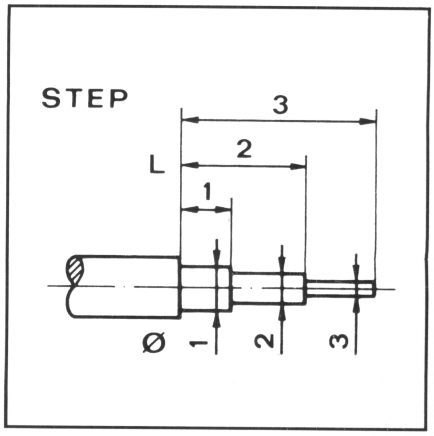

Program sheet

Cable No.	Cable Description/Type	Lengths/Diameters						Date	Remarks
		Step 1		Step 2		Step 3			
		L	Ø	L	Ø	L	Ø		
01									
02									
03									
04									
05									
06									
07									
08									
09									
10									
11									
12									
13									
14									
15									
16									
17									
18									
19									
20									
21									
22									
23									
24									
25									
26									
27									
28									
29									
30									
31									
32									
33									
34									
35									
36									
37									
38									
39									

Exterior view of the SCHLEUNIGER 207

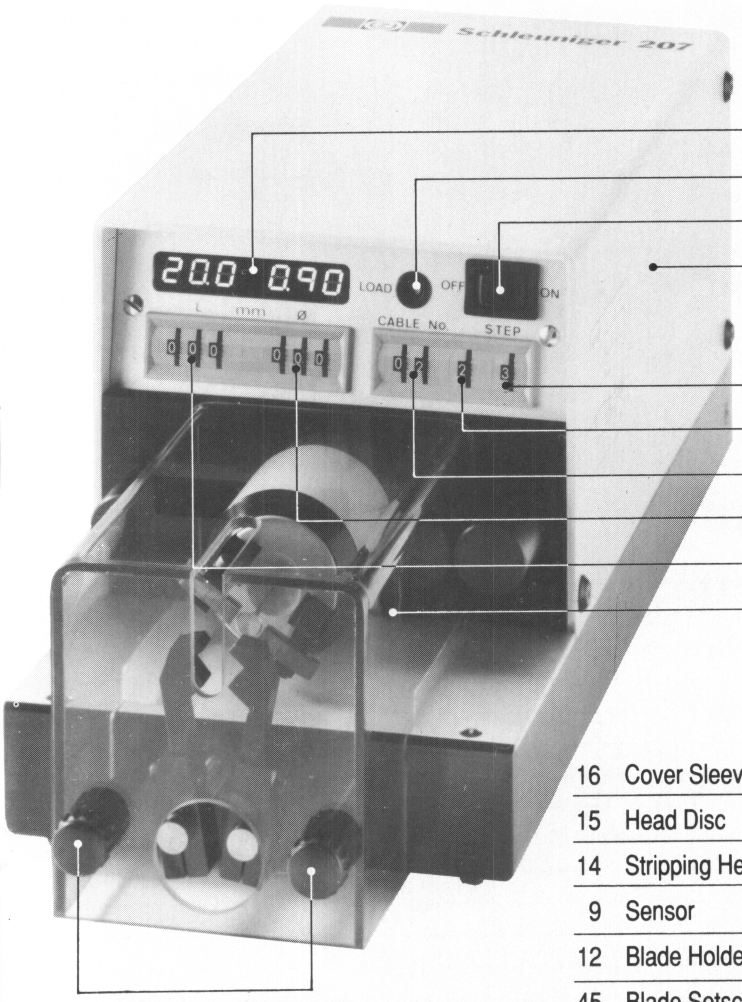

7 LED Display
6 Load Switch
1 On/Off Switch
34 Main Cover
S Step Switch
A Partial Strip Switch
P Cable No. Switches
D Diameter Switches
L Length Switches
46 Safety Shield
52 Safety Shield Mounting Screws

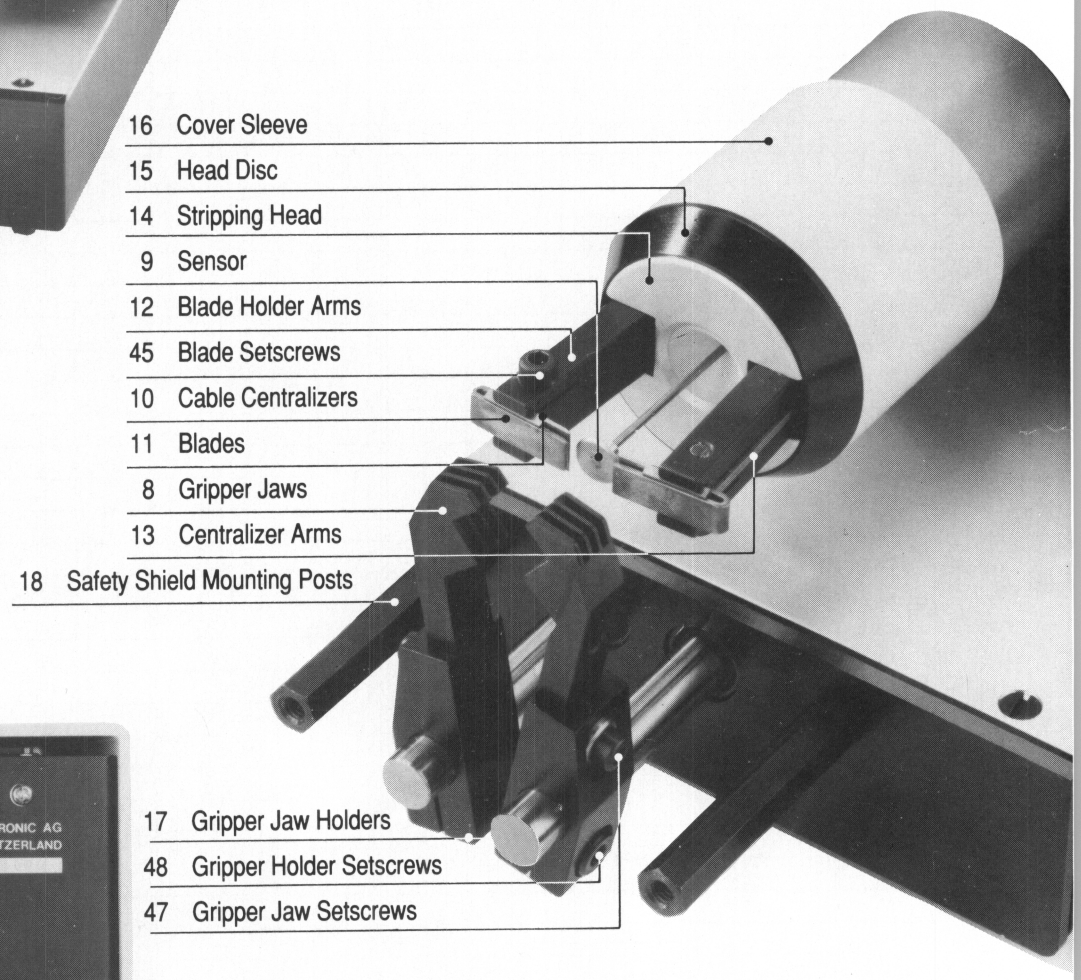

16 Cover Sleeve
15 Head Disc
14 Stripping Head
9 Sensor
12 Blade Holder Arms
45 Blade Setscrews
10 Cable Centralizers
11 Blades
8 Gripper Jaws
13 Centralizer Arms
18 Safety Shield Mounting Posts
17 Gripper Jaw Holders
48 Gripper Holder Setscrews
47 Gripper Jaw Setscrews

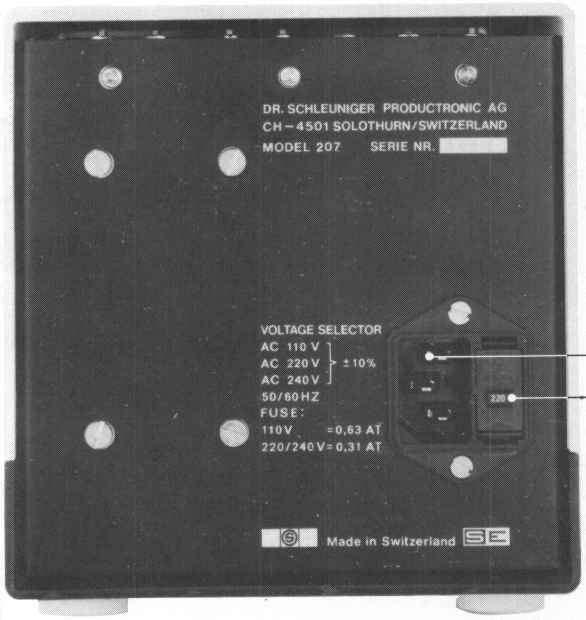

21 Main Power Input Connector
19,20 Voltage Selector, Fuse Holder

Table of Contents

Page	
1	General view of the SCHLEUNIGER 207
2	Technical data
3	Preface / The advantages of the SCHLEUNIGER 207 / Service arrangements
4	Delivery check / Material checklist / Transportation procedures / Typical SCHLEUNIGER 207 / Starting operation of the SCHLEUNIGER 207
5	Functional description of the SCHLEUNIGER 207 / Programming / Partial stripping of coaxial cables / Partial stripping of single cables
6	Operating the machine / Initial calibration of the machine / Blade change and calibration
7	Adjusting the blades and cable centralizers with the calibration set
8	Adjusting the grippers with the calibration set / Sensor adjustment
9	Electronic section / Maintenance
10	Troubleshooting checklist
11	Troubleshooting checklist / Spare parts list

Technical data

Stripping length	max. 20 mm (.787 in.)
Stripping diameter	max. 7 mm (.275 in.)
Production rate	approx. 300 – 350/hr. (3stages)
Machine cycle rate	1stage = 3 sec. (1), 2stages = 5.5 sec. (1 + 2), 3stages = 7 sec. (1 + 2 + 3)
Noise level	approx. 62 dB (A)
Safety standard	DIN 31001
Blades	Carbide or carbide, titanium coated
Possible adjustments	
Length	0.1 mm (.001 in.) step
Diameter	0.01 mm (.001 in.) step
max. number of steps in one cycle	3
Memory capacity	39 different cables with up to three stripping stages each
Memory retention after power failure	2 years
Supply voltage, selectable	110 V/50 or 60 Hz, 220 V/50 or 60 Hz, 240 V/50 or 60 Hz
Power consumption	approx. 80 VA
Working temperature	from 10°C – 40°C
Net weight	6 kg
Dimensions	L 370 X W 135 X H 143 mm (L 14.5" X W 5.5" X H 5.6")

Specifications subject to change without notice.

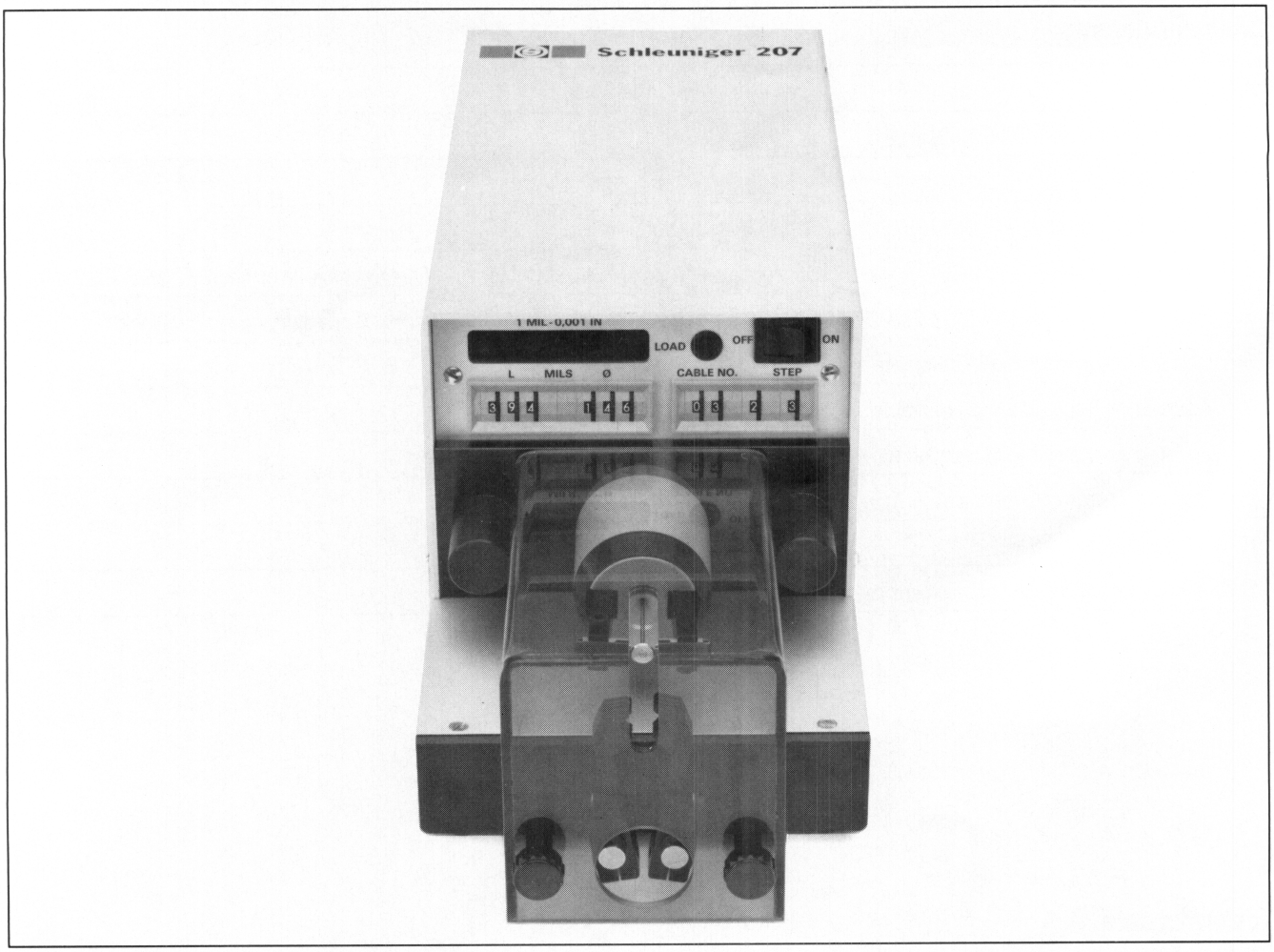

SCHLEUNIGER 207

Operating Instructions

DR. SCHLEUNIGER & CO.

Schöngrünstrasse 27 CH-4501 Solothurn (Switzerland) Tel: 065 22 03 21 Telex: 934335 Fax: 065 22 63 20

SCHLEUNIGER USA INC.

A SUBSIDIARY OF SCHLEUNIGER GROUP SWITZERLAND

150 Dow St. Tower 4 Manchester, NH 03101 Tel: 603-668-8117 Telex: 6503417298 Fax: 603-668-8119

TECHNISCHE INFORMATION TECHNICAL INFORMATION

RIEMENWECHSEL 207

1 Feder aushängen.

2 Beide Schrauben des Mitnehmers lösen und Mitnehmer abziehen.

3 Auslöserstange aus dem Abisolierkopf ziehen.

4 Zangenhalterschrauben lösen und Spannzangen abziehen. Spannzangen nicht vertauschen!

5 Kleine Sicherheitsmutter abschrauben.

6 Grosse Mutter der Abisolierwelle abschrauben.

ACHTUNG: Bei aufgeschlagenem «L» auf dem Motorträger hat die Mutter ein Linksgewinde.

7 I-6kt-Stiftschraube der Riemenscheibe vier Umdrehungen lösen.

8 Abisolierwelle aus der Maschine ziehen.

9 Neuen Riemen einlegen.

Wiedermontage in umgekehrter Reihenfolge.

VORSICHT: Beim Anschrauben der Riemenscheibe auf die Aufbohrung der Welle achten!
Beim Festziehen der kleinen Sicherheitsmutter auf ein kleines Spiel zwischen der Mutter und der Gegenscheibe des Lagers achten!

Einstellungen des Auslösers und der Spannzangen nach den Beschreibungen der Bedienungsanleitung ausführen!

REMOVAL BELT 207

1 Un-hook sensor solenoid spring.

2 Remove sensor disc.

3 Remove sensor pin.

4 Remove grippers (do not mix up the left and right grippers).

5 Remove small hex nut.

6 Remove large hex nut.

CAUTION: If vertical post has an «L» stamped on it, the hex nut has a left hand thread.

7 Loosen pulley setscrew 4 turns.

8 Slide main spindle out of machine.

9 Install new belt.

Reverse the procedure to install the belt.

BE CAREFUL to install the pulley setscrew into the hole in the spindle.
Also, BE CAREFUL when installing the small hex nut. There must be a small amount of play between the nut and the washer.

The grippers and the sensor must now be calibrated using the optional calibration set as described in the manual.

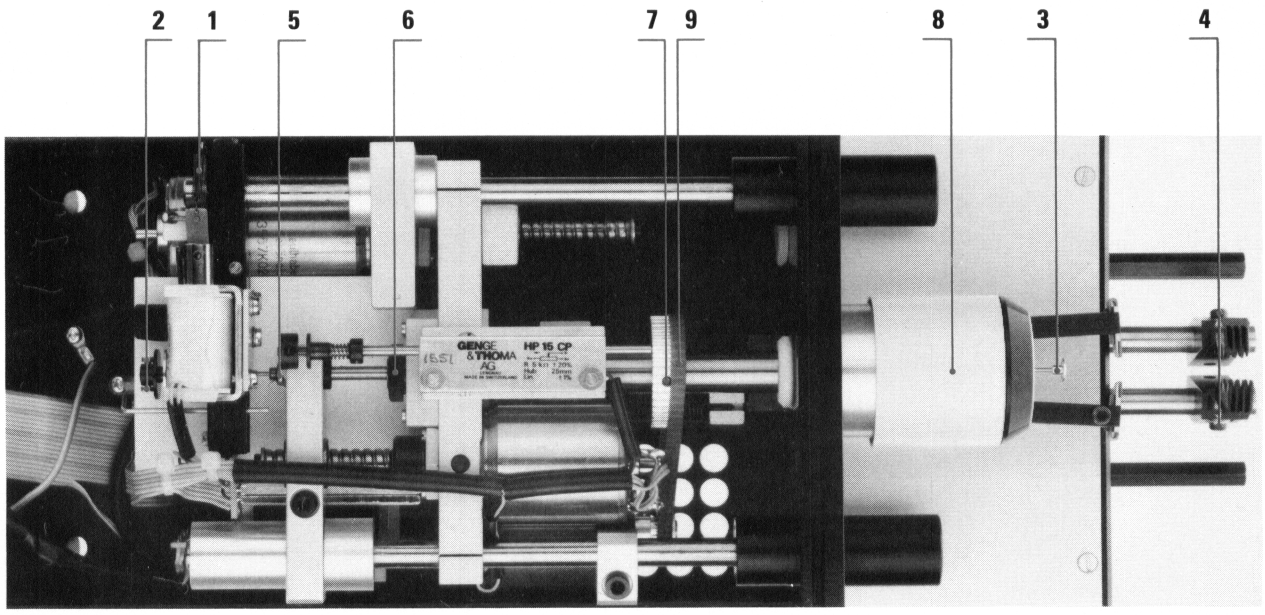

C / 207 | Group: A / Release

Position	Part-Number	Pieces	Description
CA 001	C4-0214	1	Sensor shaft and button assy
CA 002	BN-341 M 2,5 x 20	1	Cheese head screw, galvanized
CA 003	BN-341 M 3 x 5	4	Cheese head screw, galvanized
CA 004	BN-24 M 3 x 4	1	Set screw
CA 005	BN-782 M 3	4	Washers, galvanized
CA 006	C4-0223	1	Solenoid holder
CA 007	BN-341 M 2,5 x 12	2	Cheese head screw, galvanized
CA 008	BN-341 M 2 x 3	2	Cheese head screw, galvanized
CA 009	C4-0219	1	Sensor disc with set screw
CA 010	BN-272 M 4 x 18	1	Cheese head screw, black
CA 011	C3-0202A	1	Frame
CA 012	C4-0221	1	Spring holder
CA 013	C4-0216	1	Sensor stop ramp
CA 014	C4-0218	1	Stopper
CA 015	-		(see Pos. 008)
CA 016	BN-109 M 2	2	Nut
CA 017	N-3101	1	Sensor solenoid
CA 018	BN-272 M 3 x 6	1	Cheese head screw, black
CA 019	C4-0300	1	Lock bar for sensor with screw
CA 020	C4-0217	1	Centralizer arm bearing
CA 021	C4-0213	1	Joining piece
CA 022	BN-878 d 2 x 8	1	Press pin
CA 023	BN-341 M 2,5 x 6	1	Cheese head screw, galvanized
CA 024	C4-0703	2	Special screw, M2
CA 025	C4-0220	1	Spring solenoid sensor extension
CA 026	C4-0212	1	Wire linkage for sensor
CA 027	BN-832 d 1,5	3	Spannringe D 1.5
CA 029	C4-0222	1	Bushing
CA 030	BN-715 M 2	2	Washer, galvanized
CA 031	BN-715 M 3	1	Washer, galvanized

CASA Modular Systems

Print-Date: 03/05/21

Phone: 64-4-9393 777

66 Fitzherbert Street,
Petone, 5012, Wellington

eMail: sales@casa.co.nz

eCommerce: www.casamodularsystems.com

http://www.casa.co.nz

BarTender Label_100x30L_CASA.lpt

CA

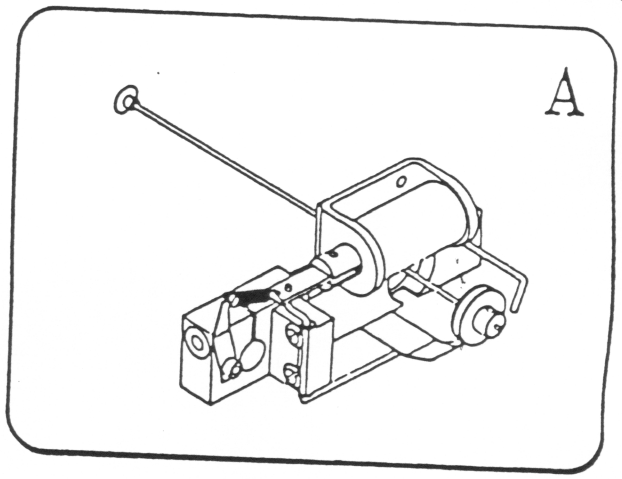
A

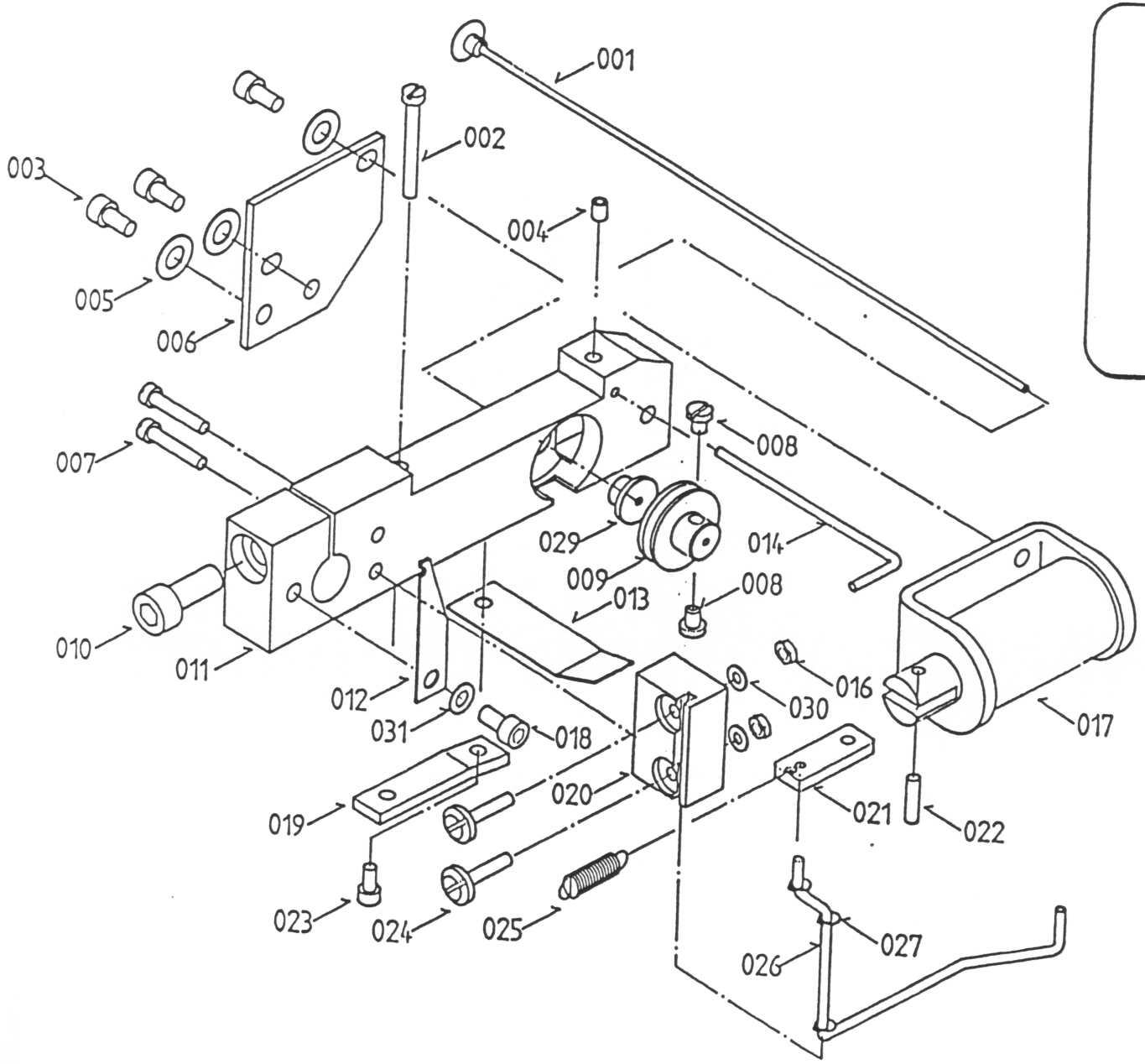
001
002
003
004
005
006
007
008
009
010
011
012
013
014
016
017
018
019
020
021
022
023
024
025
026
027
029
030
031

C / 207	Group: B / Base plate and safety cover	Page 1/1

Position	Part-Number	Pieces	Description
CB 001	BN-1277 M 3	6	Washer for flat head screw
CB 002	BN-21 M 3 x 10	6	Flat head screw, galvanized
CB 003			(see 002)
CB 004	C3-0205	1	Main cover
CB 005	N-9120	4	Rubber feet
CB 006	BN-993 d 3,9 x 9,5	4	Sheet-metal screw, galvanized
CB 007	C3-0204	1	Base plate
CB 008	C3-0206 2-933-193	1	Safety shield plexiglas CG 18
CB 009			(not existing)
CB 010	N-9002 2-934-193	2	Screw, safety shield CG4
CB 011			(see 005)
CB 012			(see 006)

CB

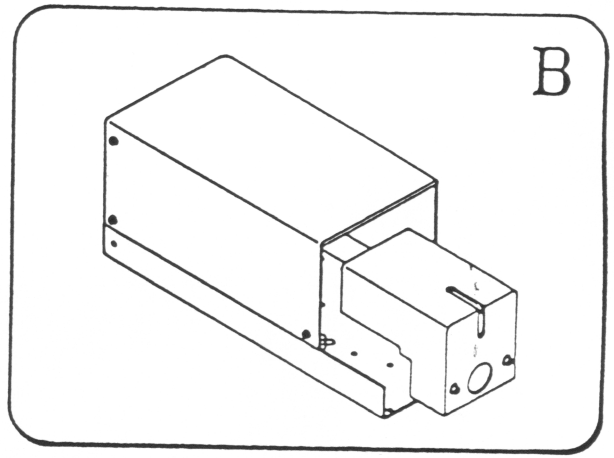

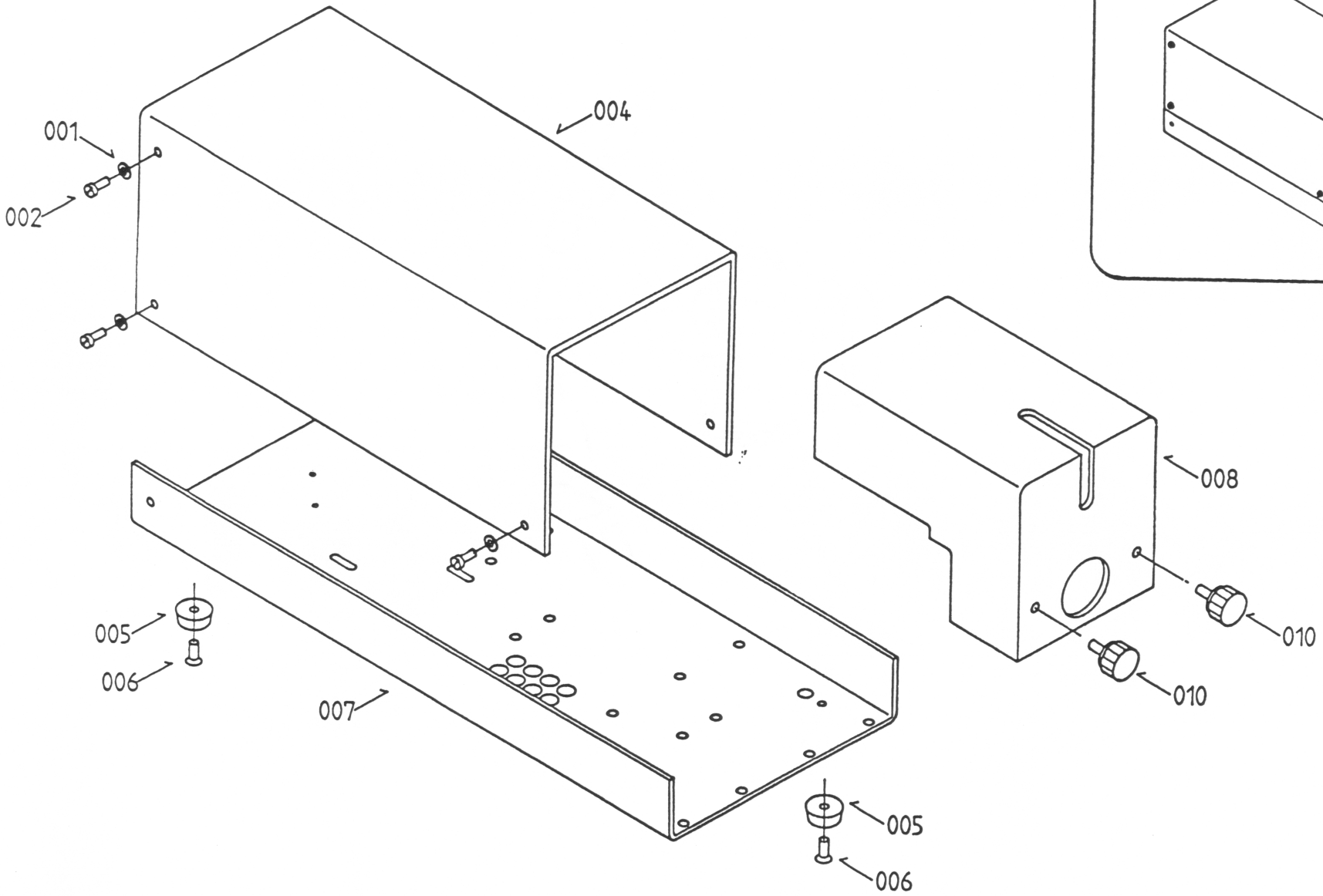

C / 207	Group: G	Page 1/2

Position	Part-Number	Pieces	Description
CG 001	N-1401	2 / 1 / 2	Linear bearing
CG 002	BN-272 M 4 x 18	1	Cheese head screw, hexagon
CG 003	BN-857 d 2,5 m 6 L14	1	Cylindrical pin, hardened
CG 004	C4-0252	1	Spring clip
CG 005	BN-341 M 2 x 12	4	Cheese head screw, galvanized
CG 006	BN-341 M 2 x 18	4 / 4	Cheese head screw, galvanized
CG 007	C4-0251	1	Sleeve
CG 008	C4-0250	1 / 1	Cover
CG 009	C4-0253	1	Lead screw assy diameter
CG 010	C4-0239	1	Cover
CG 011	BN-363 M 3 x 6	4	Flat head screw, galvanized
CG 012	N-1300	1	Pin bearing
CG 013	BN-330 M 2 x 14	4	Cheese head screw, galvanized
CG 014	N-3201	2	Potentiometer HP 15
CG 015	C4-0267	2	Holder
CG 016	C4-0552	1	Motor-Holder I
CG 017	N-3002	1	Length Motor
CG 018	C4-0292	2	Guide shaft
CG 019	N-3001	1 / 1	Spindle and diameter motor
CG 020	BN-272 M 4 x 12	1	Cheese head screw, hexagon
CG 021	BN-272 M 4 x 12	2 / 1	Cheese head screw, hexagon
CG 022			(see CG 021)
CG 023	C4-0233	1	Shaft support
CG 024			(see CG 018)
CG 025			(see CG 008)
CG 026	C4-0553	1	Sensor rod retract
CG 027			(see CG 021)
CG 028	BN-1097 TL-8-090	1	Protection plugs
CG 029			(see CG 006)
CG 030	C4-0254	1	Lead screw assy length
CG 031	C4-0268	1	Motor-Holder II
CG 032	C4-0302	1	Small pulley for spindle
CG 033	BN-341 M 2 x 5	4	Cheese head screw galvanized
CG 034	N-4002	1	Timing belt
CG 035	N-9130	1	Neoprene (130)
CG 036	C4-0551	1	Bushing, ERTALYTE
CG 037	C4-0269	1	Sensor rod retract
CG 038	BN-54 M 4 x 20	1	Hexagon screw
CG 039	BN-272 M 4 x 14	2	Cheese head screw, hexagon

C / 207	Group: G	Page 2/2

Position	Part-Number	Pieces	Description
CG 040	C4-0262	1	Front plate complete
CG 041	C4-0255	1	Alum shroud
CG 042	BN-272 M 4 x 10	4 / 2	Cheese head screw, hexagon
CG 043	N-1363	2	Needle bush
CG 045	N-9131	1	Neoprene (130)
CG 046	BN-729 2,5/7/0,8	4	Washer, galvanized
CG 047	N-1100	2	Thrust bearing, diameter
CG 048	N-1200	4	Thrust washer, diameter
CG 050	N-1104	1	Thrust bearing
CG 051	N-1204	1	Thrust washer
CG 052	N-1240	1	Thrust washer
CG 053	BN-715 M 4	1 / 4 / 2	Washer, galvanized
CG 054	N-5020	1	O-Ring
CG 055	BN-24 M 3 x 5	1	Set screw

CG

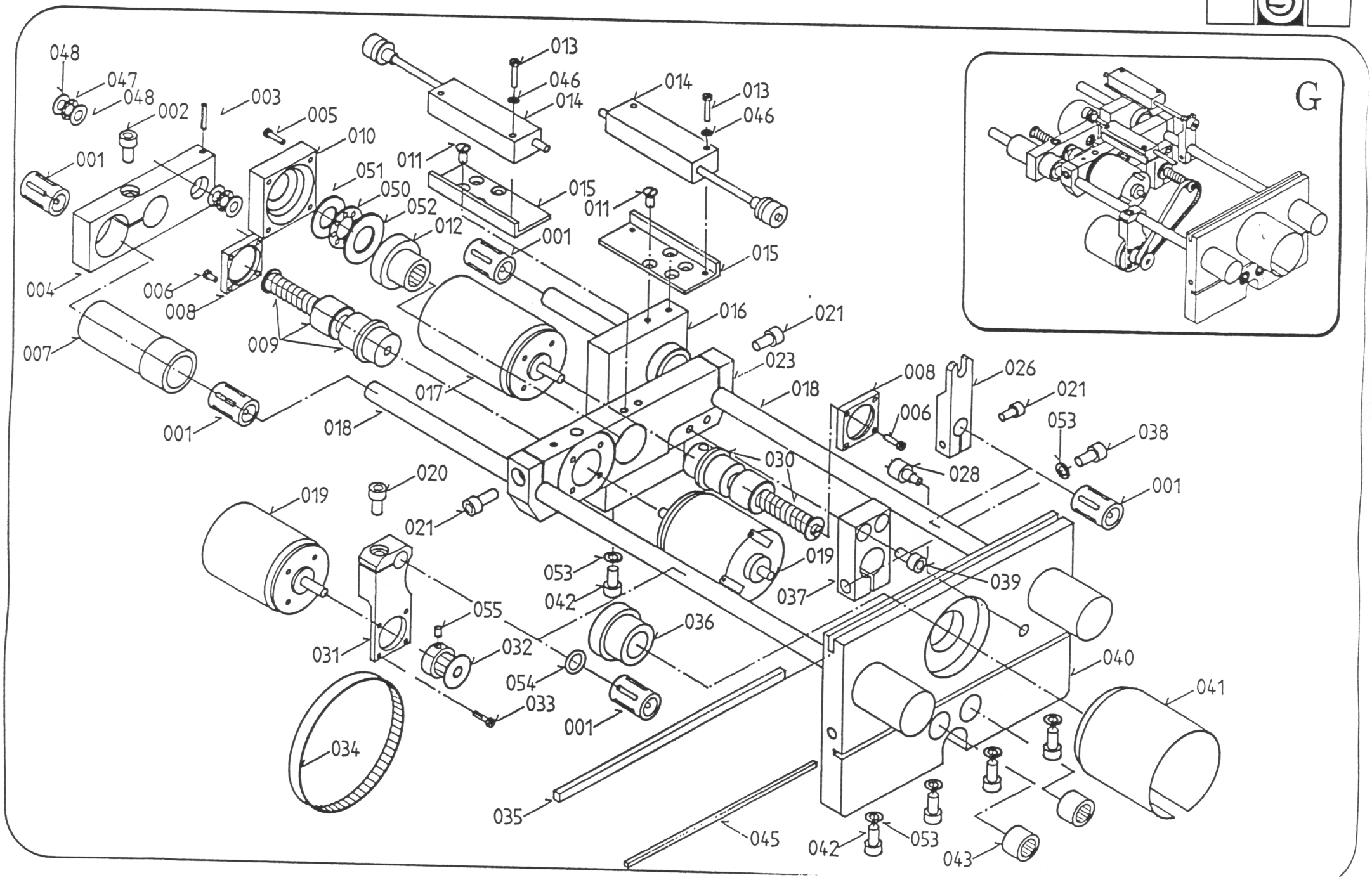

G
048
047
048
002
003
005
010
001
004
006
008
007
009
001
051
050
052
012
011
013
046
014
015
001
014
013
046
011
015
016
021
023
017
018
018
008
006
026
021
053
038
028
001
030
019
020
021
019
037
039
053
042
055
036
031
032
054
033
001
034
035
040
041
045
042
053
043

C / 207 | Group: K / Coating head | Page 1/2

Position	Part-Number	Pieces	Description
CK 001	C4-0238	1	Large hex nut for shaft
CK 002	BN-25 M 3 x 8	1	Set screw
CK 003	C4-0237	1	Bushing
CK 004	C4-0231	1	Pulley, spindle drive
CK 005	C4-0230	1	Spindle shaft
CK 006	BN-161 M 4	1	Small hex nut M4 8N 161
CK 007	C4-0701	1	Set collar
CK 008	BN-25 M 3 x 3	1	Set screw
CK 009	BN-831 d 4,0	1	Half moon ring Type H
CK 010	C4-0229	1	Blast pipe
CK 011	C4-0232	1	Spring
CK 012	C4-0225	2	Centralizer arm
CK 013	N-1361	2	INA Needle bush
CK 014	-	2	Cylindrical pin
CK 015	BN-1385 d 2 x 6	4	Post 2 x 6 BN 1385
CK 016	C4-0236	2	Cable centralizers
CK 017	C4-0243	2	Blade holder arm
CK 018	-	2	Blade holder screw
CK 019	C4-0296	2	Carbide blade
CK 020	C4-0234	1	Funnel
CK 021	C4-0245	2	Spring, blade arms
CK 022	C4-0247	1	Head
CK 023	-	3	Set screw
CK 024	C4-0244	2	Eccentrics
CK 025	BN-330 M 2 x 4	1	Cheese head screw, galvanized
CK 026	C4-0702	1	Special washer for central. spring
CK 027	C4-0246	1	Spring for centralizers
CK 028	C4-0241	2	Rectangular key
CK 029	C4-0242	1	Cone support
CK 030	BN-357 M 3 x 5	2	Flat head screw, galvanized
CK 031	C4-0240	1	Key
CK 032	BN-330 M 2 x 3	2	M2x13 slotted cheese head
CK 033	C4-0228	2	Guide plate
CK 034	C4-0227	1	Protective tube, painted
CK 035	N-5080	1	O-Ring
CK 036	C4-0226	1	Stripping head black ring w. o-ring

C / 207	Group: K / Coating head	Page 2/2

Position	Part-Number	Pieces	Description
CK 037	BN-24 M 3 x 3	1	Set screw
CK 038	BN-871 d 1,5 x 5	2	Dowel pin

CK

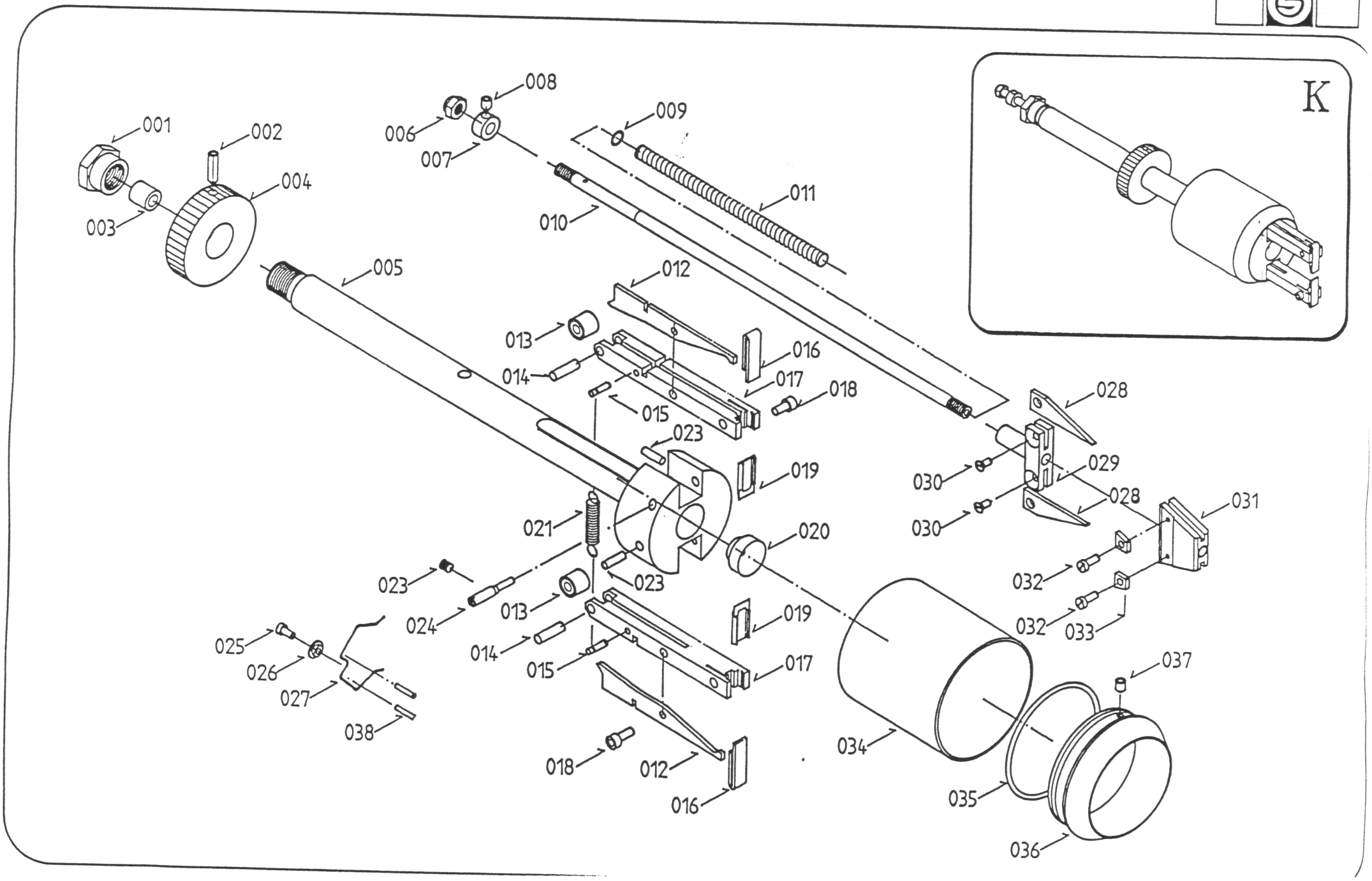
K
001
002
003
004
005
006
007
008
009
010
011
012
013
014
015
016
017
018
019
020
021
023
024
025
026
027
028
029
030
031
032
033
034
035
036
037
038

C / 207	Group: R / Frame	Page 1/1

Position	Part-Number	Pieces	Description
CR 001	BN-330 M 3 x 8	3	Cheese head screw w. slot. galv.
CR 002	BN-363 M 3 x 6	4	Flat head screw, galvanized
CR 003	C4-0279	1	Back panel
CR 004	BN-16 M 4 x 6	2	Cheese head screw, hex., black
CR 005	C4-0278	1	Support II
CR 006	C4-0277A	1	Support I
CR 007	BN-117 M 3	1	Nut, galvanized
CR 008	BN-715 2,5 x 7 x 0,8	1	Washer
CR 009	C4-0281	1	Red lens for Display
CR 010	C4-0271	1	Button head screw
CR 011	C4-0280A	1	Front panel
CR 012	BN-368 M 3 x 5	2	Button head screw
CR 013	C4-0386	1	Ring, load switch
CR 014	N-7330	2	Stand-off
CR 015	BN-726 M 3	3	Washer

CR

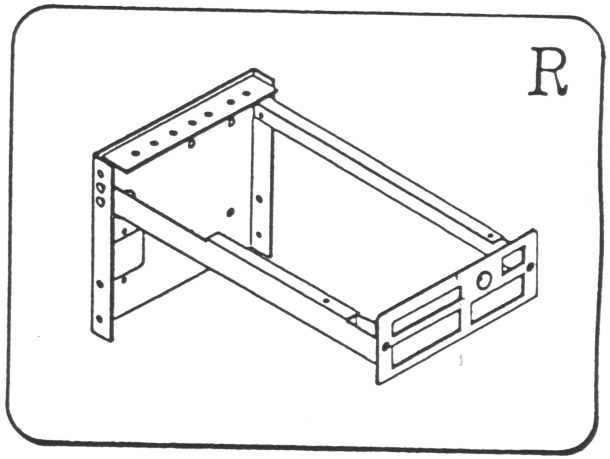

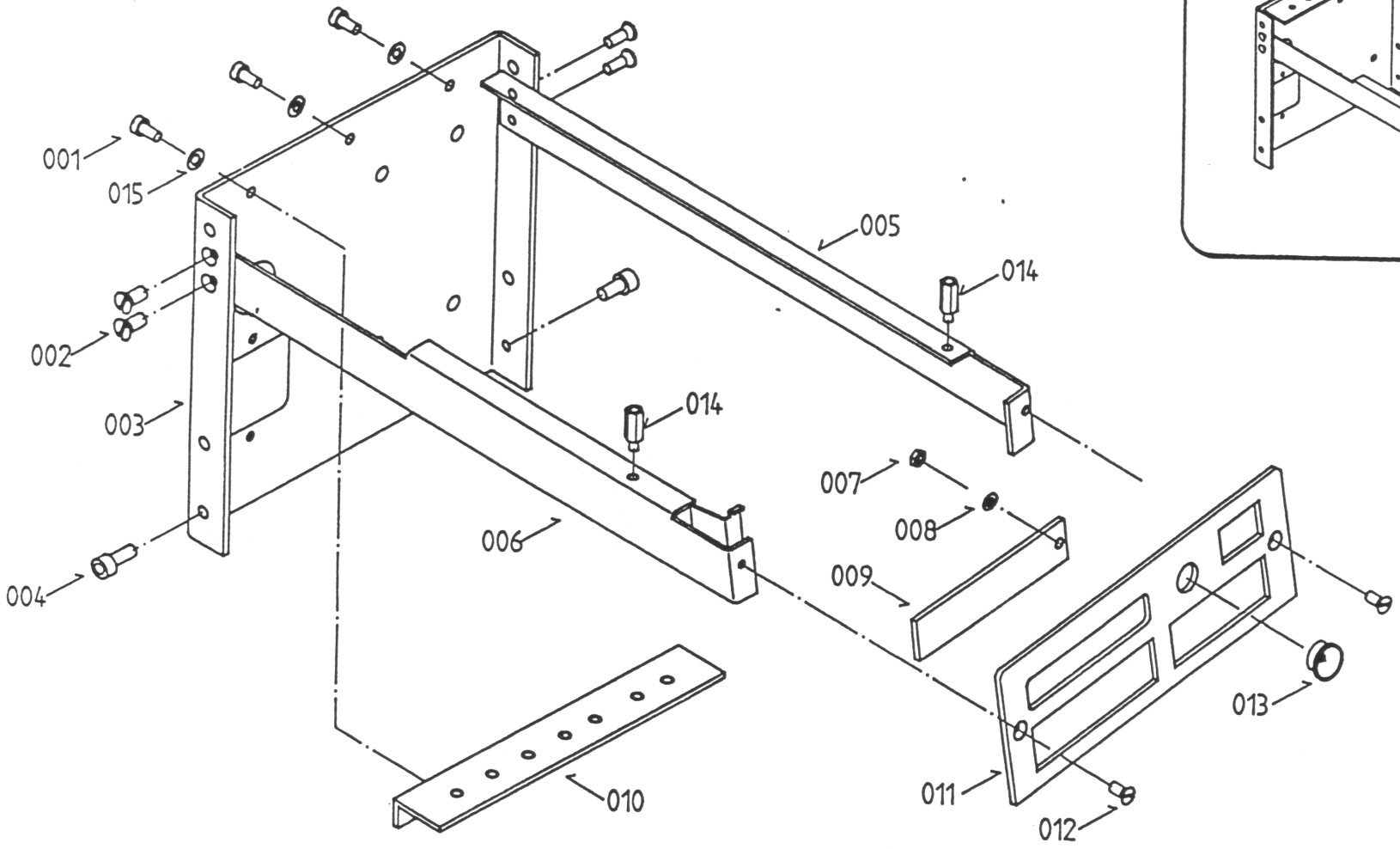

C / 207 | Group: S / Sledge

Position	Part-Number	Pieces	Description
CS 001	C4-0294	1	Compression spring for gripper jaw
CS 002	C4-0205	1	Reel support with shaft + pin
CS 003	C4-0205	1	Reel support with shaft + pin
CS 004	-		(not existing)
CS 005	-		(not existing)
CS 006	N-1362	2	Needle bush
CS 007	BN-832 d4	2	Straining ring
CS 008	-		(not existing)
CS 009	N-1400	2	Bearing case
CS 010	N-3100	1	Gripper solenoid
CS 011	C4-0200	1	Front cover
CS 012	C4-0201	2	Bearing holder
CS 013	BN-715 M 4	4 / 1	Washer, galvanized
CS 014	BN-272 M 4 x 10	4 / 4	Cheese head screw, hexagon
CS 015	BN-1075 d8,4 x 25,2	1	Polyamid washer
CS 016	C4-0295	1	Compression spring gripper shaft
CS 017	C4-0290	1	Extension spring, solenoid
CS 018	-		(see CS 036)
CS 019	BN-732 d6 25 x 1,8	1	Washer, galvanized
CS 020	-		(no number)
CS 021	BN-735 d6,4 16 x 0,8	1	Washer, galvanized
CS 022	BN-124 M 6	1	Screw
CS 023	C4-0203	1	Fork
CS 024	BN-878 d2,5 x 8	2	Press pin
CS 025	-		(see CS 024)
CS 026	C4-0210	1	Spring holder block for gripper rod
CS 027	N-7301	2	Stand-off
CS 028	C4-0704	2	Washer
CS 029	BN-15 M 4 x 8	2	Cheese head screw, hexagon
CS 030	C4-0211	1	Solenoid holder
CS 031	BN-272 M 4 x 12	1	Cheese head screw, hexagon
CS 032	BN-363 M 3 x 6	2	Flat head screw, galvanized
CS 033	C4-0208	1	Main cover
CS 034	BN-24 M 4 x 4	4	Set screw
CS 035	BN-868 d8	4	Set collar
CS 036	N-1202	8	Thrust washer, gripper
CS 037	N-1102	4	Thrust bearing, gripper
CS 038	N-7331	2	Stand-off, 40 mm

C / 207	Group: S 7 Sledge	Page 2/2

CS 039	-		(not existing)
CS 040	-		(not existing)
CS 041	C4-0204	2	Gripper jaw set (2)
CS 042	BN-272 M 3 x 10	2	Cheese head screw, hexagon
CS 043	C4-0705	2	Washer for gripper arms
CS 044	BN-272 M 4 x 8	2	Cheese head screw, hexagon
CS 045	C4-0202	2	Gripper jaw holder, each
CS 046	BN-24 M 4 x 4	1	Set screw
CS 047	C4-0207	1	Guide shaft
CS 048	C4-0209	1	Cone
CS 049	N-5011	1	O-Ring for plunger
CS 050	N-1363	2	Needle bush
CS 051	N-5200	2	Packing ring
CS 052	BN-15 M 4 x 8	2	Cheese head screw, hexagon

CS

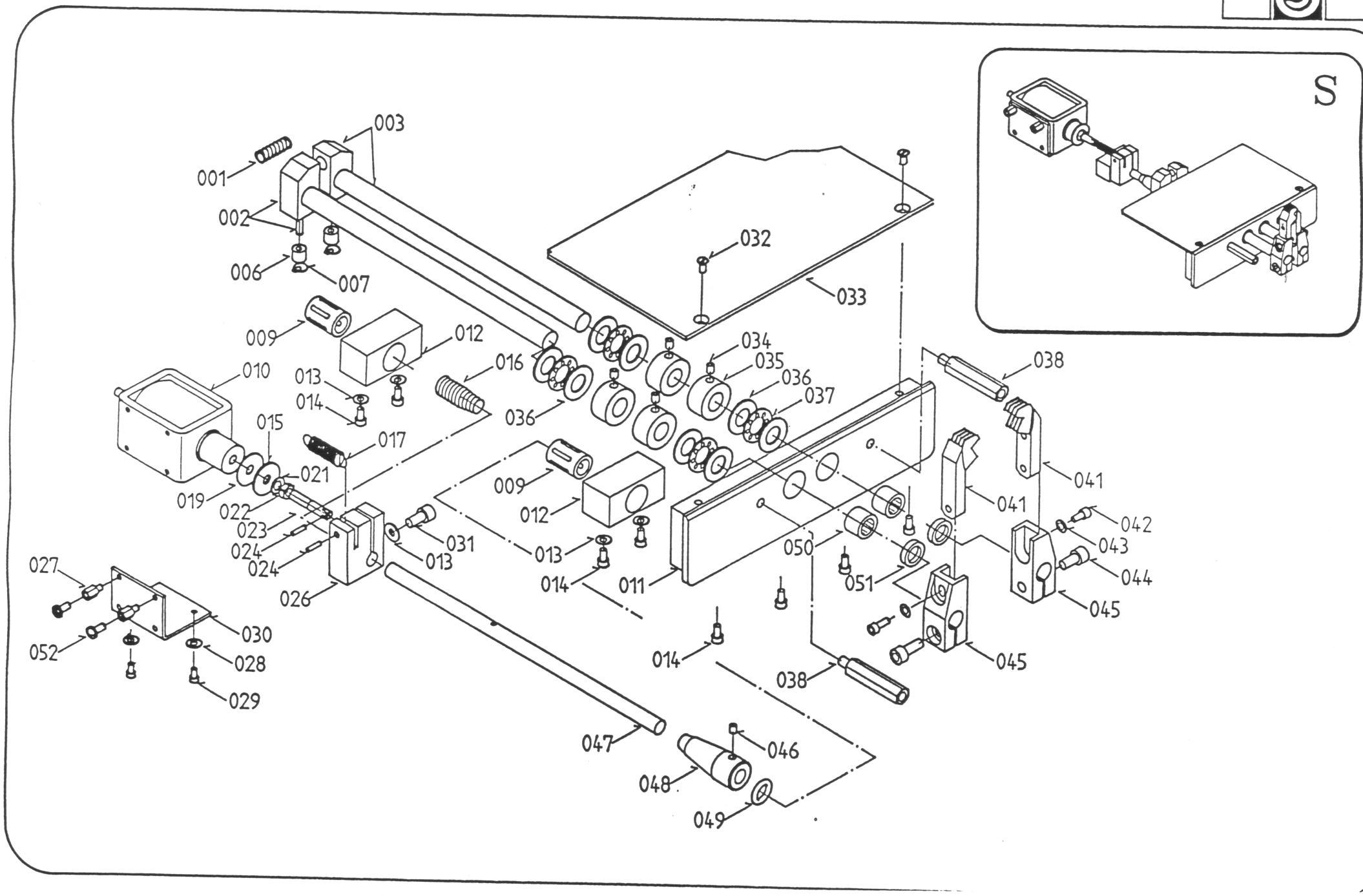
S
001
002
003
006
007
009
010
012
013
014
015
016
017
019
021
022
023
024
024
026
027
028
029
030
031
032
033
034
035
036
036
037
038
038
041
041
042
043
044
045
045
047
048
049
050
051
052