THIS DRAWING AND DESIGN HEREON CONSTITUTES A PROPRIETARY DESIGN OF PACKARD ELECTRIC DIVISION AND IS NOT TO BE DUPLICATED OR REPRODUCED WITHOUT AUTHORITY OF PACKARD ELECTRIC DIVISION.
DO NOT SCALE

PART NO. 1205 2848

ZONE	DATE	SYM	REVISION RECORD	AUTHORITY	DR	CK
	29JA88	—	REDRAWN FROM "C" SIZE, MATING			
			CONNECTOR INFORMATION ADDED -			
			REVISION LEVEL REMAINS AT "B"	118008	GF	FH
	10JL'90	C	CONNECTOR SEAL 12092601 WAS 12052847	7135454	BKD	BKD

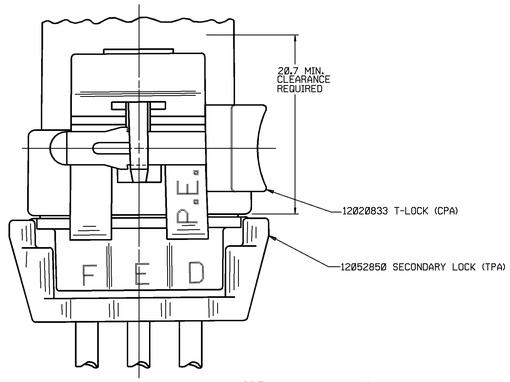

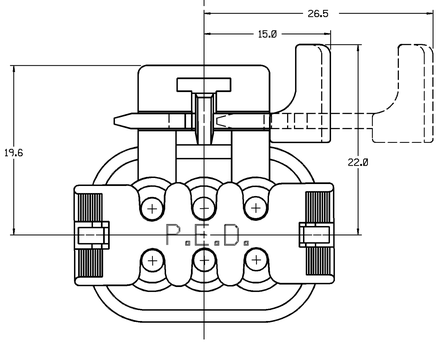

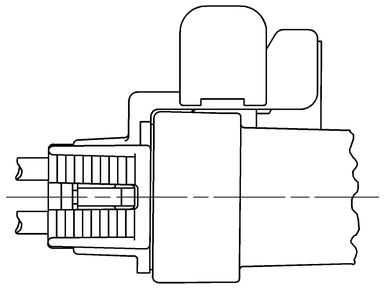

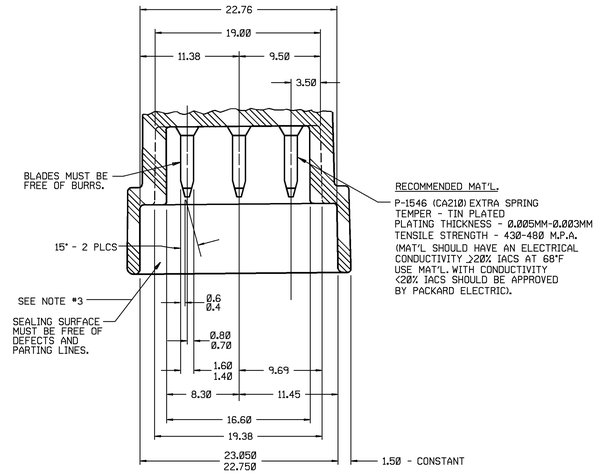

SECTION A-A

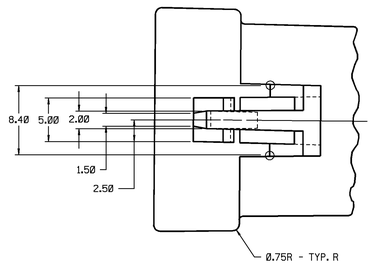

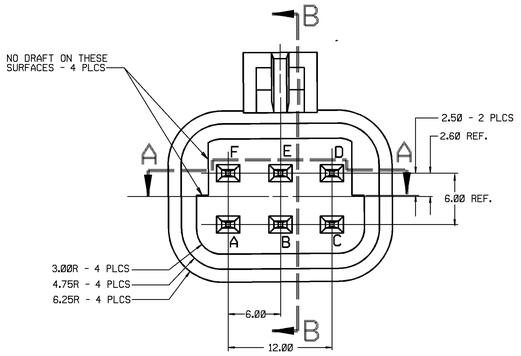

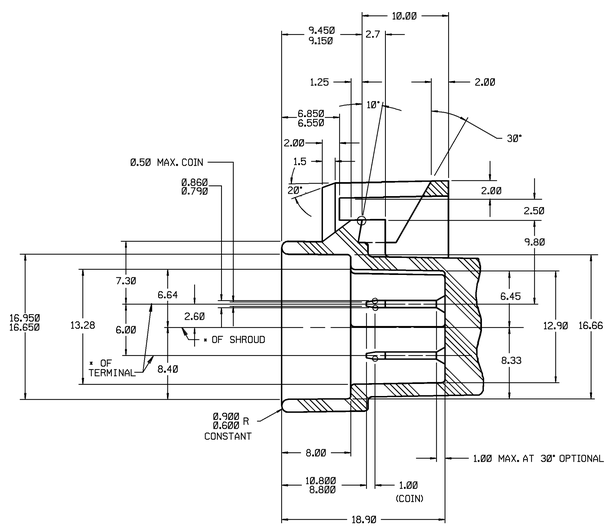

MATING CONNECTOR INFORMATION

SCALE 4:1

SECTION B-B

RECOMMENDED MAT'L — GLASS REINFORCED NYLON OR POLYESTER.

NOTES —
1. WHEN USING THIS INFORMATION FOR A NEW DESIGN, REQUEST THE LATEST COPY OF THIS PRINT FROM PACKARD ELECTRIC DIVISION.
2. ALL RADII 0.40, UNLESS OTHERWISE SPECIFIED.
3. THIS SURFACE IS "CRITICAL" FOR PART FUNCTION. ALSO, ALL THREE PLACE DIMENSIONS ARE "CRITICAL".
4. THE SHAPE OF THE SHROUD AND LOCK ARE REPRESENTATIVE. VARIATIONS FOR ADAPTING THE SHROUD FOR SPECIFIC DEVICES AND/OR MOLDING METHODS ARE PERMITTED AS LONG AS FUNCTION IS MAINTAINED.

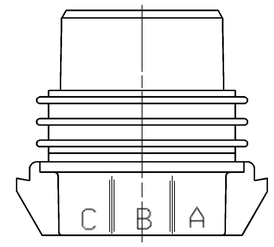

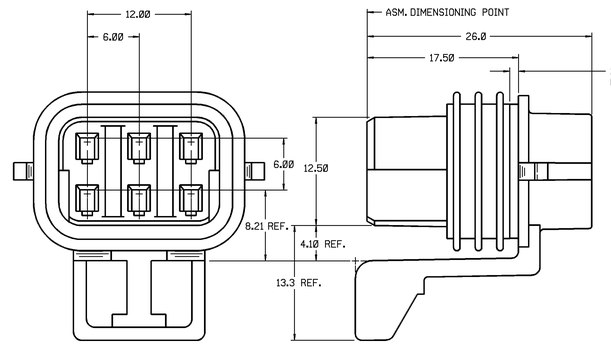

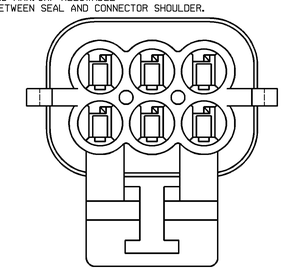

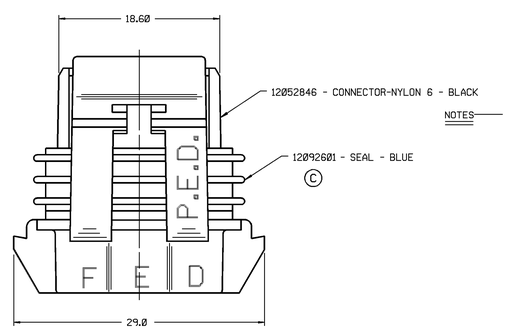

NOTES —
1. CAVITIES TO ACCEPT 12048074 TERMINAL OR EQUIVALENT.
2. CAVITIES TO ACCEPT 12048086 CABLE SEAL OR EQUIVALENT.
3. CONNECTOR TO ACCEPT 12052850 SECONDARY LOCK OR EQUIVALENT.
4. MATING CONNECTOR - 12052849 OR EQUIVALENT.
5. MAXIMUM CABLE DIAMETER - 2.80 MM.
6. WHEN PARTS ARE SHIPPED, THEY MUST BE PACKED IN PLASTIC BAGS OR SHIPPING CONTAINERS MUST BE LINED WITH PLASTIC LINERS. BAGS OR LINERS MUST BE SEALED TO AVOID ENTRY OF FOREIGN MATTER.
7. THIS CONNECTOR & SEAL ASM. TO ACCEPT 12020833 T-LOCK (CPA) WHEN MATED WITH 12052849 CONNECTOR OR EQUIVALENT.
8. SEALING CODE 3.

PART NO. 1205 2848

PART NO. 1205 2848

PED / INTERGRAPH. MICROSTATION
FILE SPEC: ****USER**** DGN#SPECIFICATION**********
*****SYTIME******
THIRD ANGLE PROJECTION
METRIC
DIMENSIONS ARE IN MILLIMETERS UNLESS OTHERWISE SPECIFIED.
CODE NO. 6900
TOLERANCE UNLESS OTHERWISE SPECIFIED
DECIMAL: ONE PLACE ± 0.3 TWO PLACE ± 0.15
ANGULAR ± 2°
G.C. -C-5110
DWG. DATE 23JA85
SCALE NONE
DR. Doug Tsou 29JA88
EST. NO.
CK. F. HESTON DATE 23FE88
REFERENCE NO.
APPR. R.H. PARKHURST DATE 23FE88
APPR. RON DAUM DATE 23FE88
MATERIAL SPEC. SEE DRAWING
NAME ASM CONN 6F M/P 150
PART NO. 1205 2848
SIZE E

PACKARD ELECTRIC DIVISION
GENERAL MOTORS CORPORATION
WARREN, OHIO

PACKARD ELECTRIC
GM-85280SI
AC