REVISIONS			
LTR	DESCRIPTION	DATE	APP
-	INITIAL RELEASE ECN# 5338	2/18/99	TAW

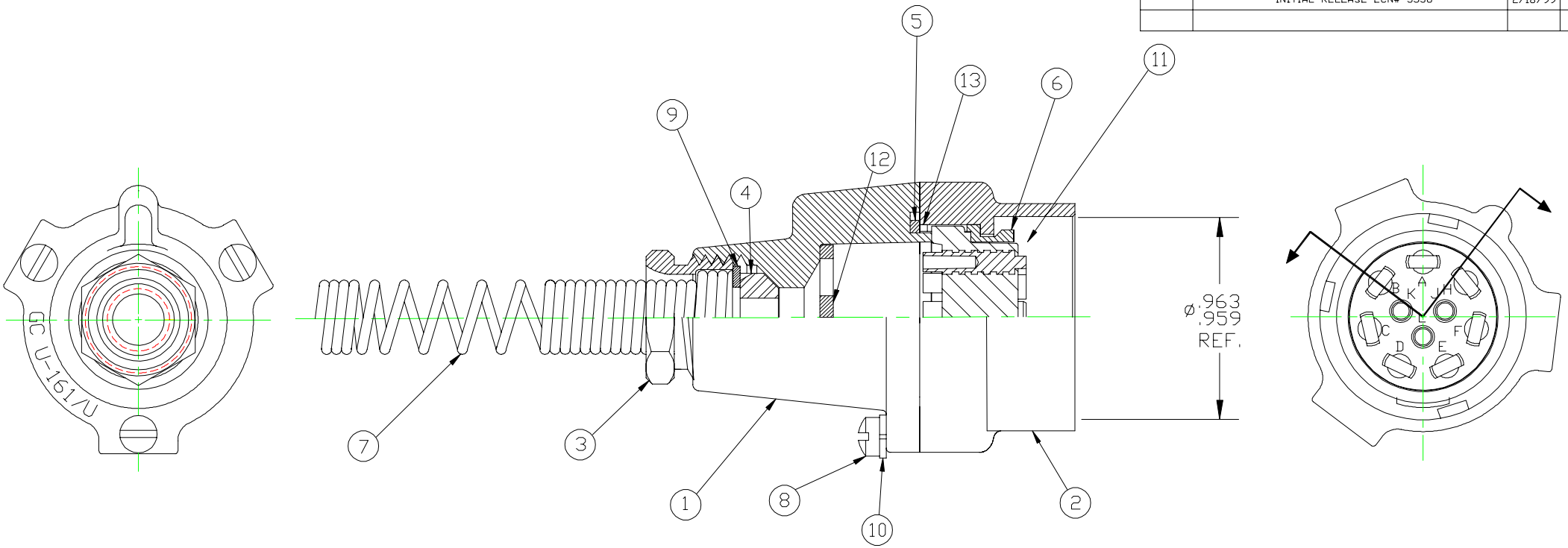

ITEM	PART NUMBER	DESCRIPTION	QUAN.
13	50-3P1	RETAINER RING	1
12	66-3P1	RETAINER	1
11	60-25G1	INSERT ASS'Y	1
10	58-1P1	WASHER, LOCK	3
9	56-1P2	WASHER	1
8	55-1P1	SCREW	3
7	52-3P1	SPRING	1
6	43-13P1	SEAL	1
5	42-5P1	GASKET	1
4	41-1P2	GROMMET	1
3	30-1P1	CABLE NUT	1
2	12-95P2	SHELL	1
1	12-12P2	HOUSING	1

LIST OF MATERIALS

NOTE:

1. ASSEMBLY SHALL MEET THE REQUIREMENTS OF MIL-C-10544C.

TOLERANCES UNLESS OTHERWISE SPECIFIED

1/X = +/- 1/64

.XX = +/- .010

.XXX = +/- .005

.XXXX = +/- .0005

ANGLES = +/- 0°-30'

WPI SALEM
FSCM 50738

GENERAL CONNECTOR
FSCM 25330

GARRY ELECTRONICS
FSCM 19112

WPI

CORPORATE HEADQUARTERS
23 Front St.
Salem, N.J. 08079

BY: TAW
APPD:
DATE: 2/18/99
SCALE: NONE

TITLE: CONNECTOR ASS'Y

PART #: U-161/U