ORDER NO. AD9103049C8

Service Manual

Amplifier

Stereo Integrated Amplifier

SU-X102

Color

(K) ..... Black Type

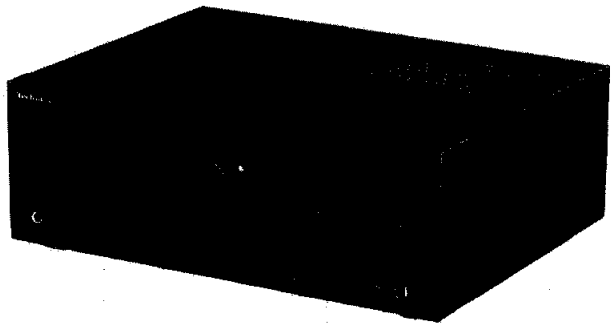

Areas

Country Code	Area	Color
(E)	Continental Europe	(K)
(EB)	Great Britain	
(EG)	F.R. Germany & Italy	
(GC)	Third Region	
(GN)	Oceania	

SPECIFICATIONS

(DIN 45 500)

■ AMPLIFIER SECTION

DIN power output	
1 kHz THD: 1 %	2 × 40 W (8 Ω)
Total harmonic distortion	
rated power at 1 kHz	1 % (8 Ω)
Harmonic distortion	
half power at 1 kHz	0.03 % (8Ω)
Residual hum and noise	0.5 mV
Damping factor	30 (8 Ω)
Input sensitivity and impedance	
PHONO	3 mV/47 kΩ
TUNER, TAPE	150 mV/22 kΩ
CD, AUX1, 2	200 mV/22 kΩ
Maximum input voltage (1 kHz, RMS)	
PHONO	100 mV
S/N (rated power 8 Ω)	
PHONO	73 dB (IHF, A: 79 dB)
TUNER, CD, AUX1, 2, TAPE	82 dB (IHF, A: 83 dB)
Frequency response	
PHONO	RIAA standard curve ±0.8 dB (30 Hz~15 kHz)
TUNER, CD, AUX1, 2, TAPE	15 Hz~50 kHz (−3 dB)
Tone controls	
BASS	50 Hz, +10 dB~−10 dB
TREBLE	20 kHz, +10 dB~−10 dB
Muting	−20 dB
Super bass	60 Hz, +8 dB
Output voltage	
TAPE REC OUT	150 mV
Channel balance, TUNER 250 Hz~6,300 Hz	±1.0 dB
Channel separation, TUNER 1 kHz	55 dB
Headphones output level and impedance	421 mV/330 Ω
Load impedance	
MAIN	8 Ω~16 Ω
SURROUND	8 Ω~16 Ω

■ GENERAL

Power consumption	230 W
Power supply	
For Continental Europe	AC 50 Hz/60 Hz, 220 V
For Great Britain and Oceania	AC 50 Hz/60 Hz, 230~240 V
For others	AC 50 Hz/60 Hz, 110 V/127 V/220 V/240 V
Dimensions (W × H × D)	360 × 129 × 305 mm (14-3/16" × 5-3/32" × 12")
Weight	5.3 kg (11.7 lb.)

Notes:

1. Specifications are subject to change without notice. Weight and dimensions are approximate.
2. Total harmonic distortion is measured by the digital spectrum analyzer.

Technics

■ CONTENTS

	Page
Before repaire	2
Protection circuitry	2
Accessories	2
Location of controls	3
Standard operations	4
Connections	4~6
Disassembly instructions	7~10
Schematic diagram	11~19
Description of FL panel	13
Circuit board diagram	20~25
Terminal guide of IC's, transistors and diodes	25
Wiring connection diagram	26
Block diagram	27, 28
Function of IC terminals	29
Replacement parts list	30~33, 36
Cabinet parts location	34, 35
Packaging	36

■ BEFORE REPAIR

(1) Turn off the power supply. Using a 10Ω, 5 W resistor connect both ends of power supply capacitors (C711, C712, 3300 μF) in order to discharge the voltage.

(2) Before turning the power supply on, after completion of repair, slowly apply the primary voltage by using a power supply voltage controller to make sure that the consumed current at 50 Hz/60 Hz in NO SIGNAL mode should be shown below with respect to supply voltage 110 V/127 V/220 V/240 V.

Power supply voltage	AC 110 V	AC 120 V	AC 220 V	AC 230 V	AC 240 V
Consumed current 50 Hz	181~424 mA	166~386 mA	96~224 mA	86~200 mA	87~204 mA
Consumed current 60 Hz	161~376 mA	148~346 mA	86~200 mA	75~175 mA	79~185 mA

■ PROTECTION CIRCUITRY

The protection circuitry may have operated if either of the following conditions is noticed:
*No sound is heard when the power is switched ON.
*Sound stops during a performance.
The function of this circuitry is to prevent circuitry damage if, for example, the postive and negative speaker connection wires are "shorted", or if speaker systems with an impedance less than the indicated rated impedance of this unit are used.
If this occurs, follow the procedure outlined below:

1. Switch OFF the power.
2. Determine the cause of the problem and correct it.
3. Switch ON the power once again.

Note:
When the protection circuitry functions, the unit will not operate unless the power is first switched OFF and then ON AGAIN.

■ ACCESSORIES

- AC power supply cord 1
  Configuration of AC power supply cord differs according to area.

  SJA187 ..... For (E) (EG) area only.
  SJA173 ..... For (GN) area only.
  SJA188 ..... For (EB) area only.
  RJA0004 ..... For (GC) area only.

- Attachment AC plug 1

  SJP9215 ..... For (GC) area only.

■ LOCATION OF CONTROLS

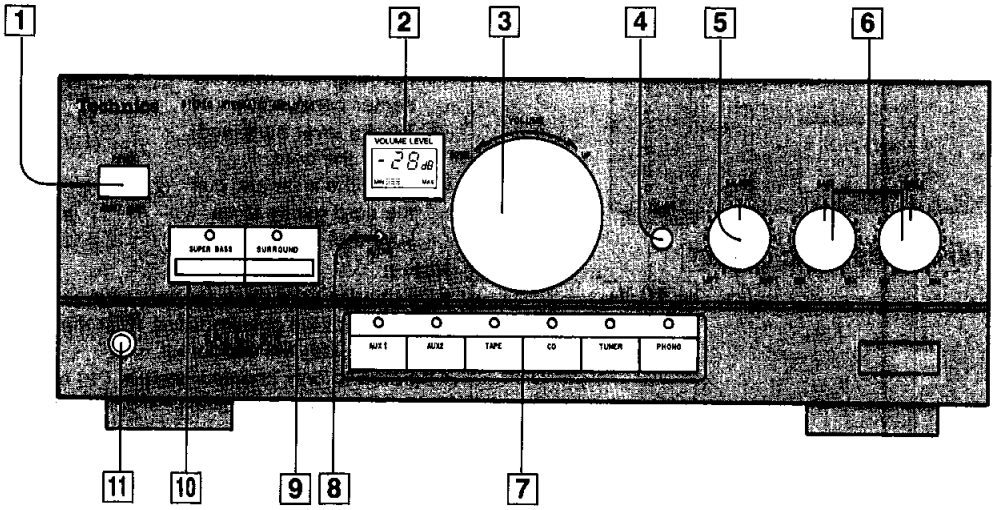

1 Power switch (POWER)
2 Volume-level indicator (VOLUME LEVEL)
3 Volume control (VOLUME)
4 Volume preset button (VOLUME PRESET)
5 Balance control (BALANCE)
6 Tone controls (BASS/TREBLE)
7 Input selectors/indicators
8 Muting indicator (MUTING)
9 Surround-sound button/indicator (SURROUND)
10 Super bass button/indicator (SUPER BASS)
11 Headphones jack (PHONES)

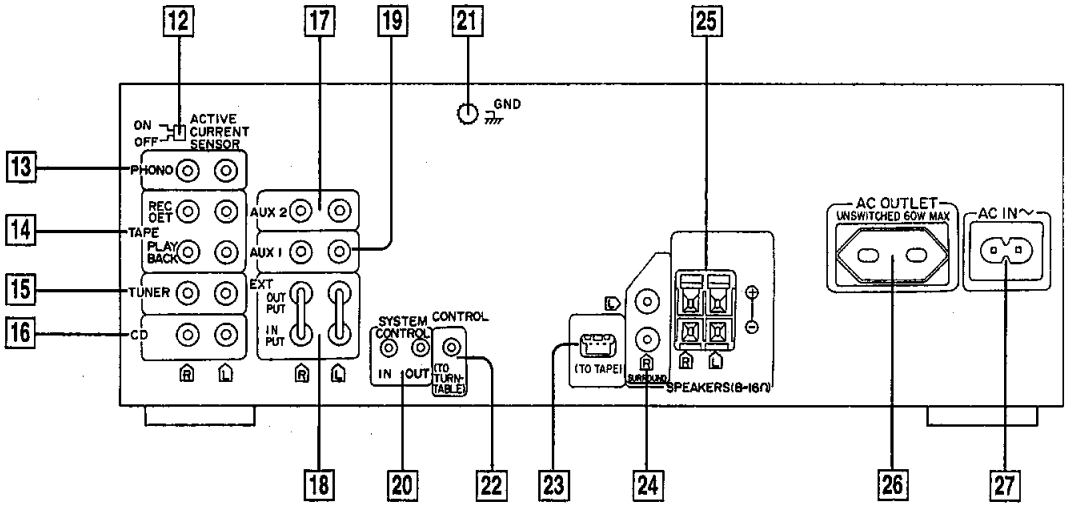

12 Active current sensor switch
13 Phono input terminal
14 Tape rec out/playback terminal
15 Tuner input terminal
16 CD input terminal
17 AUX 2 input terminal
18 EXT output/input terminal
19 AUX 1 input terminal
20 System control IN/OUT terminal
21 GND terminal
22 Control terminal (to turntable)
23 Control terminal (to cassette deck)
24 Surround-sound speaker terminal
25 Main speaker terminal
26 AC outlet
27 AC inlet

■ STANDARD OPERATIONS

When listening to music

TREBLE

Adjust the high-frequency sound to the desired tone quality.

BASS

Adjust the low-frequency sound to the desired tone quality.

BALANCE

Adjust the balance of the left/right volume.

VOLUME

Adjust the volume level.

SUPER BASS

Press this button to boost the super-low frequency range. (The indicator will illuminate.)

SURROUND

Set to the "ON" position to activate the surround-sound effect. (The indicator will illuminate.)

Note:

The surround-sound effect is only effective for phono discs, compact discs, tapes that are recorded in stereo, and for FM and other broadcasts that are broadcast in stereo. It has no effect for monaural AM broadcasts, or for any other monaural source. When listening to a sound source recorded by the surround-sound method, set this switch to the "OFF" position.

The effect by using surround-sound speaker systems

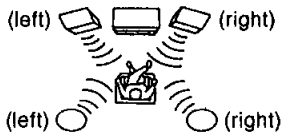

An effect similar to the dynamic sound of a concert hall

During recording

Operation of controls or switches other than the surround-sound switch has no influence upon recording.

■ CONNECTIONS

To connect the amplifier with the cassette deck

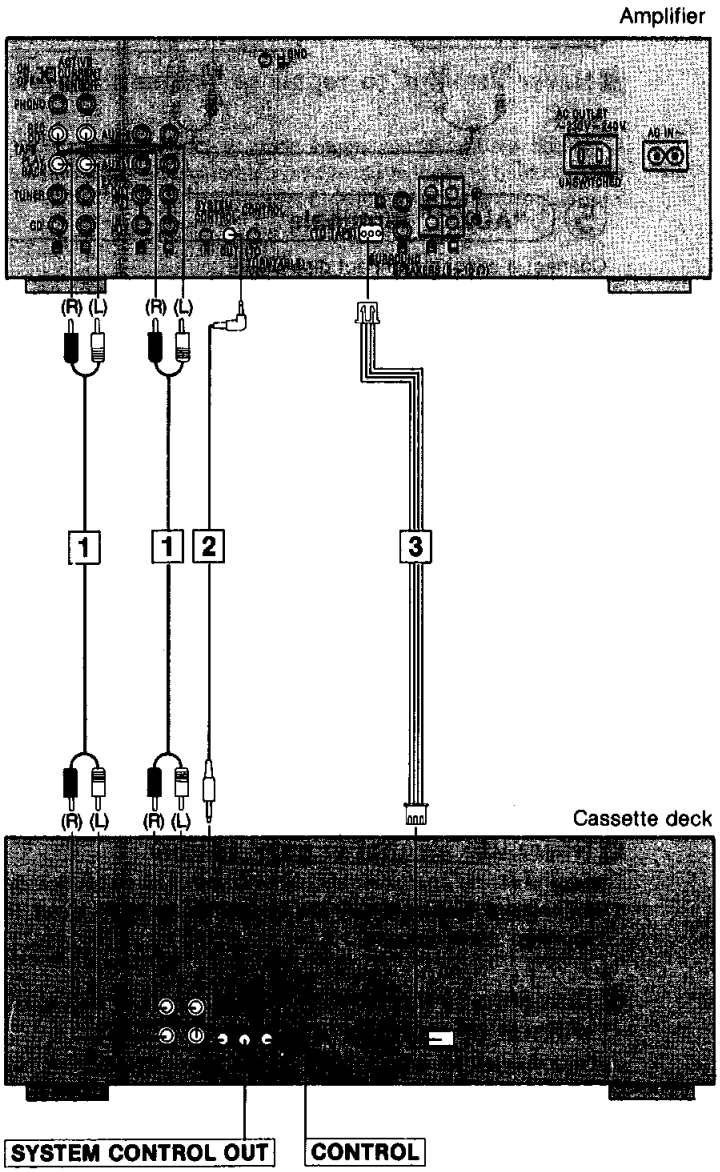

Make connections in the numbered sequence by using the included cables.

Stereo connection cable

White (L)
Red (R)

See the operating instructions of the tuner (ST-X302L) for details.

1 Connect the stereo connection cables.

2 Connect the L-type cable.

3 Connect the flat cable.

SYSTEM CONTROL OUT

This terminal is used to connect a Technics compact disc player or a Technics stereo graphic equalizer with the "SYSTEM CONTROL IN" terminal.

CONTROL

This terminal is used to connect a Technics multi compact disc player with the "CONTROL" terminal.

To connect the amplifier with other units

Make connections to each component in the system by using stereo connection cables (not included).

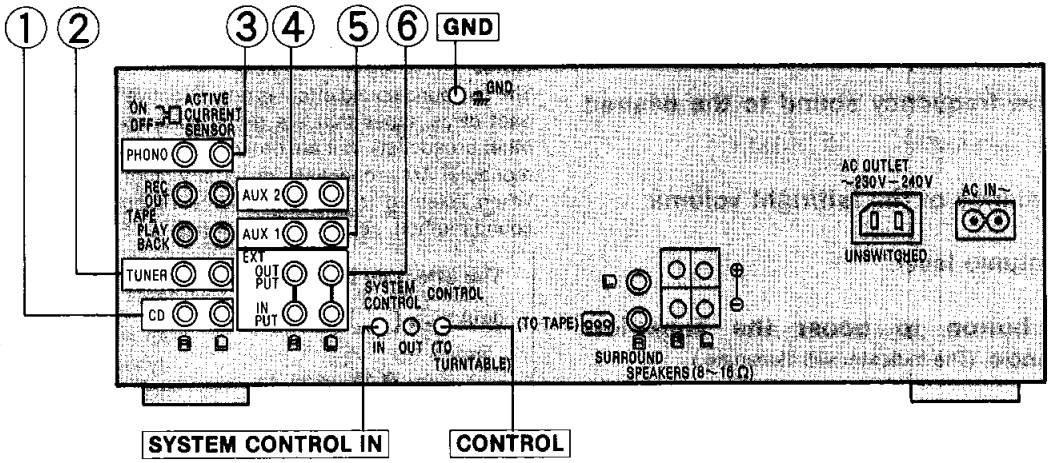

① "CD" terminals

Connect a compact disc player.

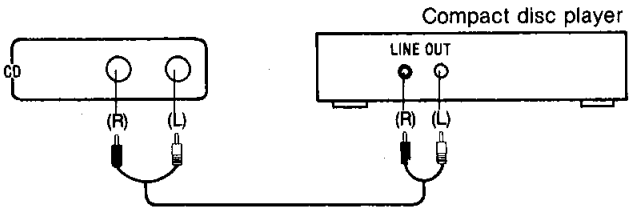

② "TUNER" terminals

Connect a tuner.

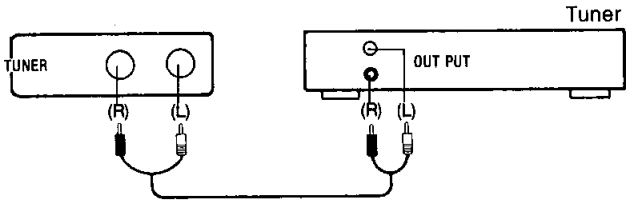

■ "SYSTEM CONTROL IN" terminal

This terminal is used to connect a Technics tuner with the "SYSTEM CONTROL OUT" terminal.

③ "PHONO" terminals

Connect a turntable.

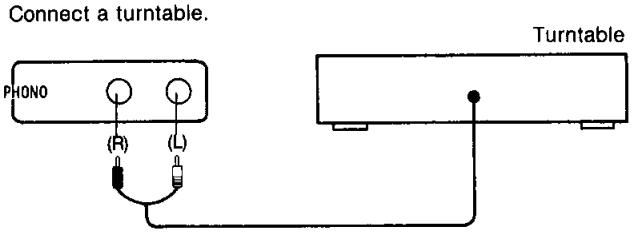

■ "GND" terminal of the amplifier

This terminal is for use with a turntable which has a ground wire.

■ "CONTROL (TO TURNTABLE)" terminal

This terminal is used to connect a Technics turntable with the "REMOTE/SYNCHRO REC" terminal.

④ "AUX 2" terminals

Connect a video disc player etc. (Only the audio is connectable)

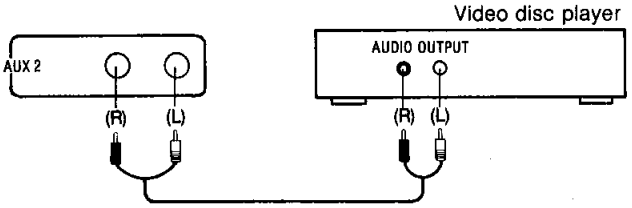

⑤ "AUX 1" terminals

Connect a second compact disc player.

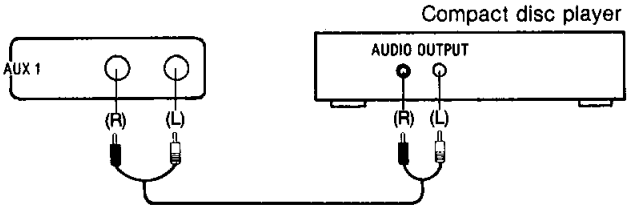

⑥ "EXT" terminals

Connect a graphic equalizer.

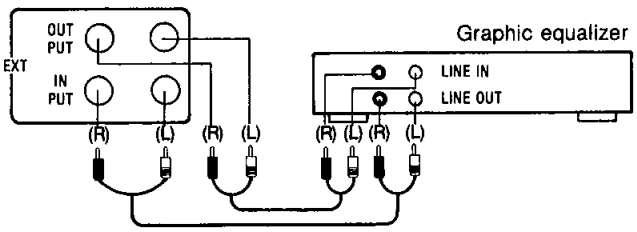

Note:
When these terminals are not in use, be sure to insert the "shorting" pins (included).

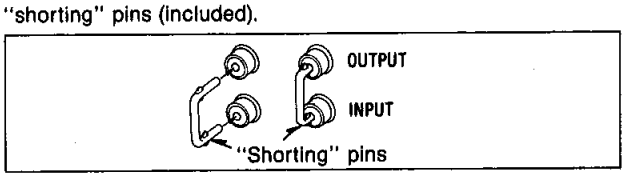

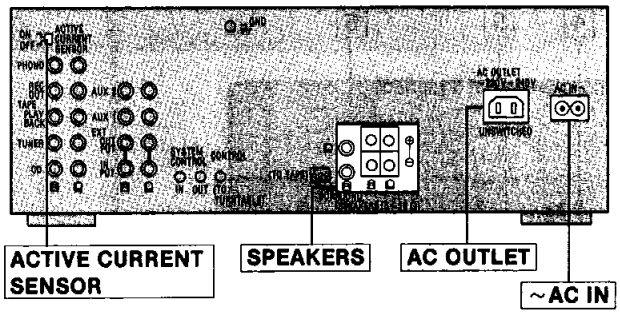

Connection of speaker systems

Two pairs of speaker systems (main, surround-sound) can be connected to the amplifier.
Speaker systems that can be connected to any of the speaker connection terminals of the amplifier are speaker systems with an impedance of 8 to 16 ohms.
Make connections to each speaker system by using speaker cords (not included).

Main speaker systems (not included)

Connect to the "SPEAKER" terminals.

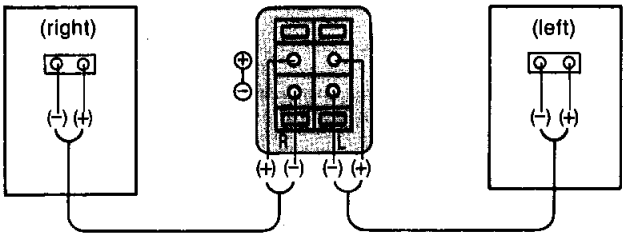

Surround-sound speaker systems (not included)

Connect to the "SURROUND" terminals.
Be sure to connect both speaker systems. If only one side is connected, no sound will be heard.

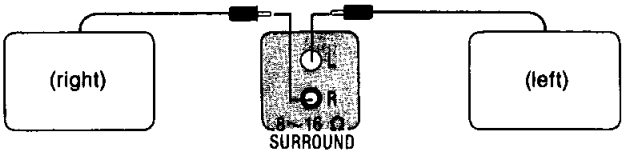

How to use the active current sensor

The selector is used to enjoy powerful super-bass sound.
ON: Switch ON when connecting the Technics system speakers (SB-CS50).
OFF: Switch OFF when connecting speakers other than Technics system speakers.
Note:
When connecting speakers other than system speakers, sound from the speakers may not be heard if the selector is pressed ON, because the protecting circuit on the amplifier becomes active.

To connect cords to terminals

① Strip off the outer covering, and twist the center conductor.
② Tilt the lever back and insert the cord.
③ Close the lever and pull the cord gently to be sure that it is secure.

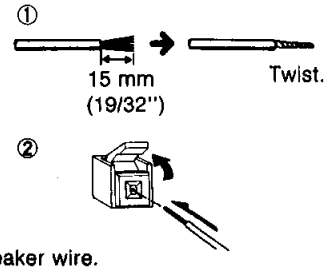

Notes:
- Do not use solid core speaker wire.
- To connect the speaker cord, twist the strands on the end. Do not solder the conductor.
- Be sure to only connect positive (+) cords to positive (+) terminals, and negative (−) cords to negative (−) terminals.

Note:
To prevent damage to circuitry, never short-circuit the plus (+) and minus (−) speaker wires.

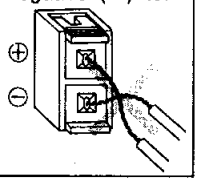

AC outlet ("AC OUTLET)"

Do not connect video equipment (such as a TV, etc.) to the AC outlet of this unit. (This outlet is intended for audio equipment.)
Do not exceed the indicated power ratings when connecting to this outlet.

"UNSWITCHED" outlet

Power is always available, regardless of power switch.
Audio equipment rated up to 60 W can be connected here.

Note:
The configuration of the AC outlet differs according to area.

AC power supply cord

Connect the AC power supply cord (included) after all other cables and cords are connected.

Notes:
- Configuration of the AC outlet and AC power supply cord differs according to area.
- If this unit is not to be connected with the tuner, the cord is to be connected to the household AC outlet.

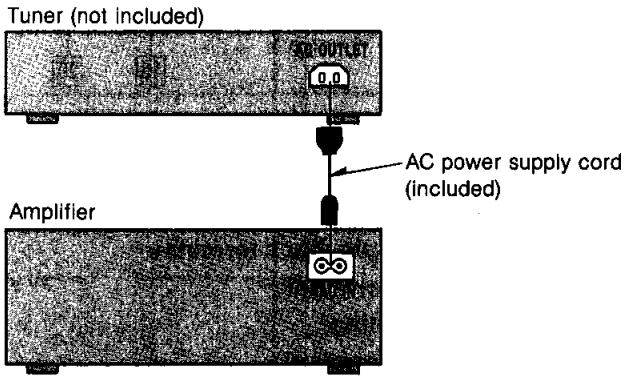

For United Kingdom

Cut off and dispose of the plug and replace with a suitable plug. (Refer to "For United Kingdom" on page 2.)

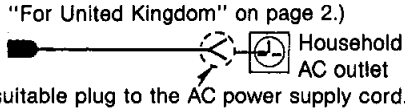

Fit a suitable plug to the AC power supply cord.

■ DISASSEMBLY INSTRUCTIONS

Ref. No. 1	Removal of the Cabinet
Procedure 1	

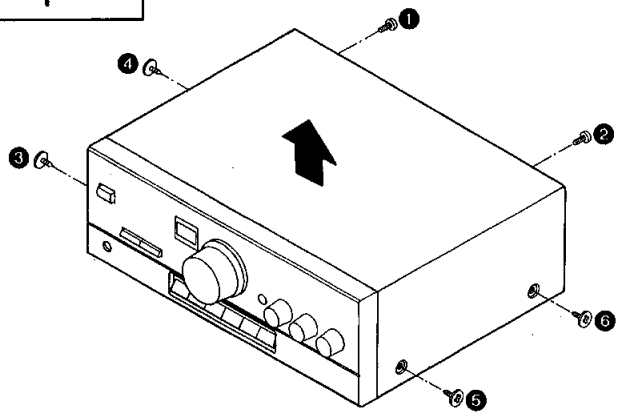

1. Remove the 6 screws (❶~❻).
2. Remove the cabinet in the direction of the arrow.

Ref. No. 2	Removal of the Front Panel Unit
Procedure 1→2	

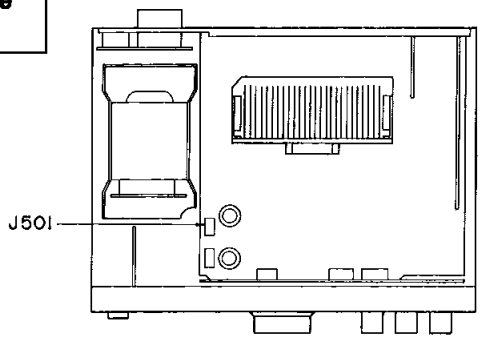

1. Remove the connector (J501).

—Removal of the Connector—

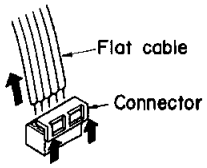

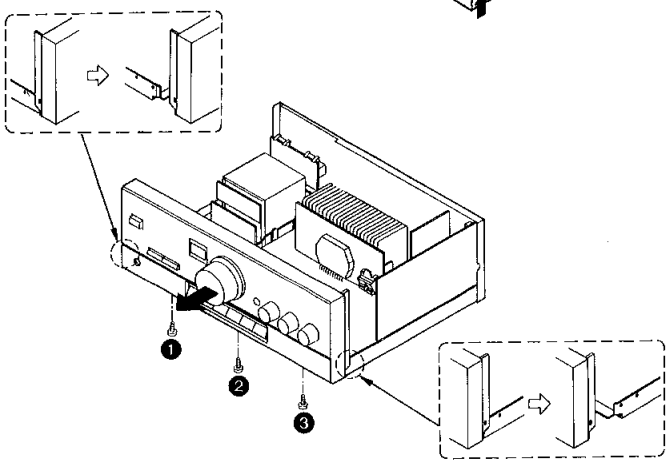

2. Remove the 3 screws (❶~❸).
3. Remove the front panel unit in the direction of the arrow.

Ref. No. 3	Removal of the Power Switch/Speaker Select Switch P.C.B.
Procedure 1→2→3	

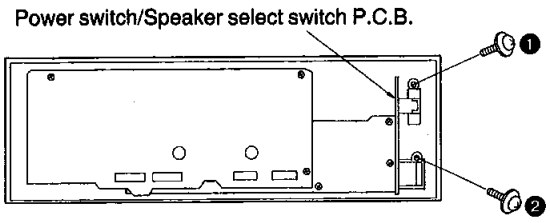

●Remove the 2 screws (❶, ❷).

Ref. No. 4	Removal of FL Drive P.C.B.
Procedure 1→2→4	

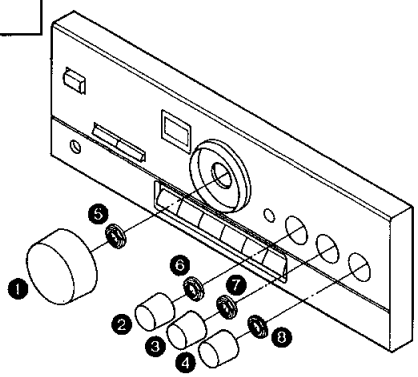

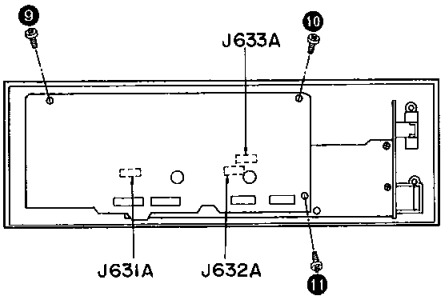

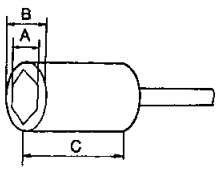

A=11 mm
B=16 mm
C=longer than 22 mm

●Use a wrench of the dimensions shown in the illustration above to remove nuts.

1. Remove the 4 knobs (❶~❹).
2. Remove the 4 nuts (❺~❽).
3. Remove the 3 screws (❾~❿).
4. Remove the 3 connectors (J631A, J632A, J633A).

Ref. No. 5	Removal of the Operation P.C.B.
Procedure 1→2→4→5	

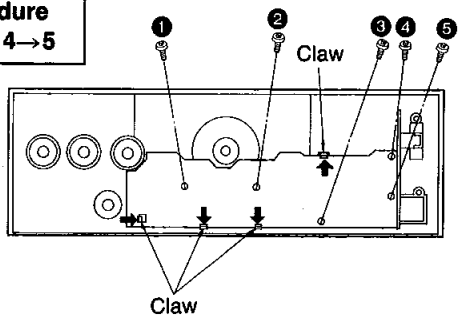

1. Remove the 5 screws (❶~❺).
2. Release the 4 claws in the direction of arrow.

Ref. No. 6	Removal of the Operation Buttons
Procedure 1→2→4→5→6	

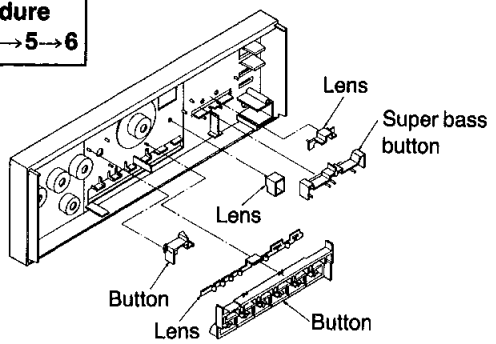

●Pull out the operation buttons and lens.

Ref. No. 7	Removal of the Rear Panel
Procedure 1→7	

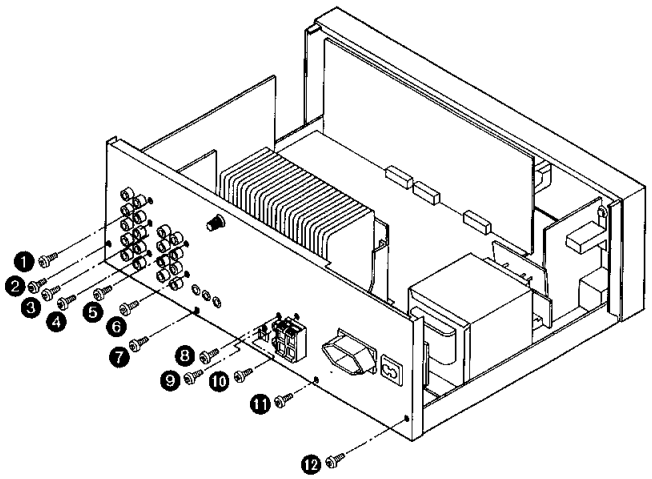

●Remove the 12 screws (❶~⓬).

Ref. No. 8	Removal of the AC OUTLET/AC IN P.C.B.
Procedure 1→8	

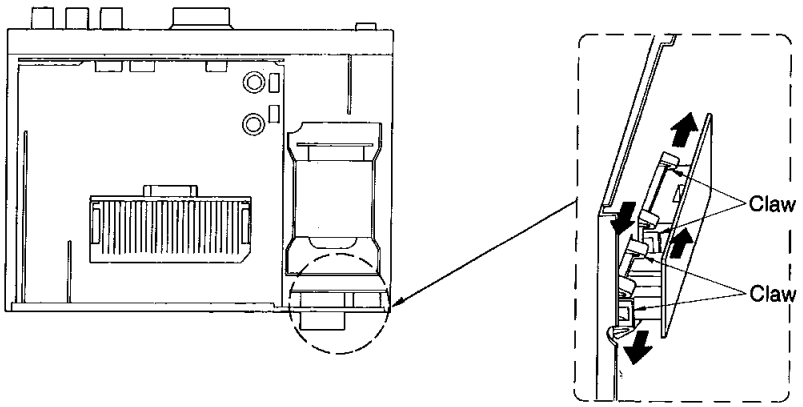

●Release the 4 claws.

Ref. No. 9	Removal of the P.C.B.s
Procedure 1→7→9	

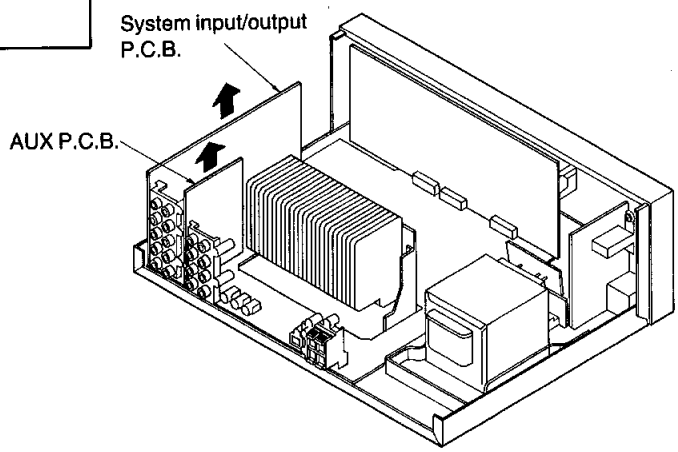

•Remove the P.C.B. in the direction of the arrow.

Ref. No. 10	Check of the main P.C.B.
Procedure 1→10	

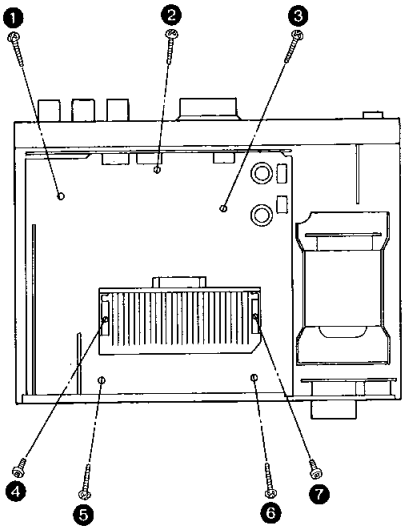

1. Remove the 7 screws (❶~❼).

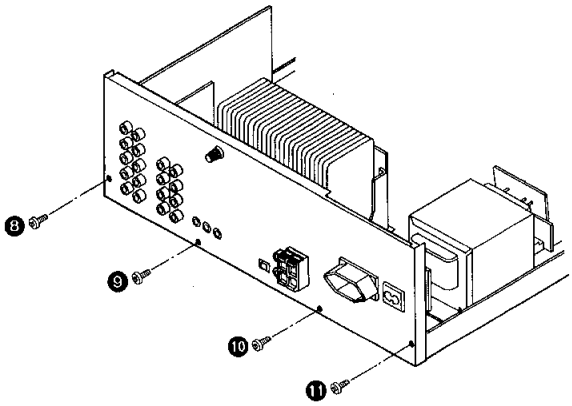

2. Remove the 4 screws (❽~⓫).

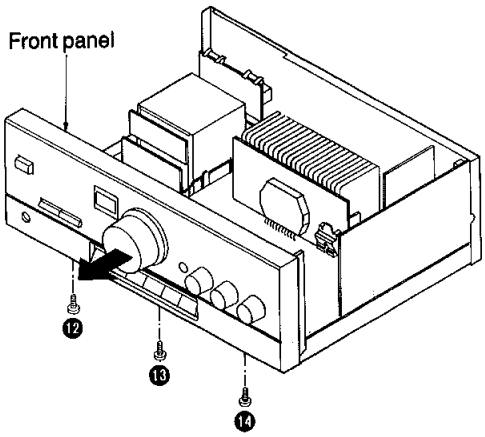

3. Remove the 3 screws (⓬~⓮).
4. Remove the front panel unit in the direction of the arrow.
   *Connect 2 flat cables (J501A, J502).

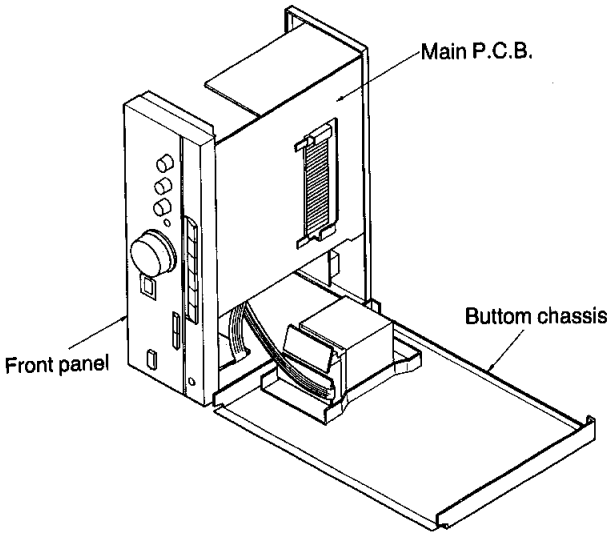

5. Remove the bottom chassis.
6. Reinstall the front panel unit to the main P.C.B.

Ref. No. 11	Removal of the Power IC and Regulator Transistor
Procedure 1→10→11	1. Unsolder the power IC or regulator transistor. 2. Remove the 3 screws (❶~❸).

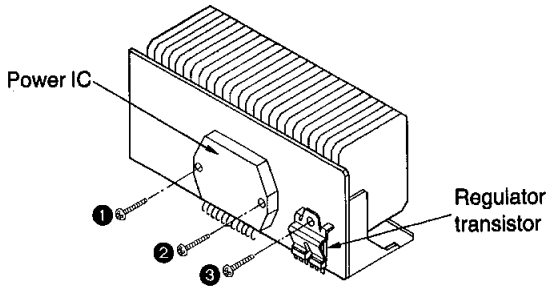

Note: When mounting the power IC, or regulator transistor apply silicon terminal compound (SZZ0L15) to the rear of the power IC or regulator transistor.

Ref. No. 12	Removal of the Power Transformer
Procedure 1→12	

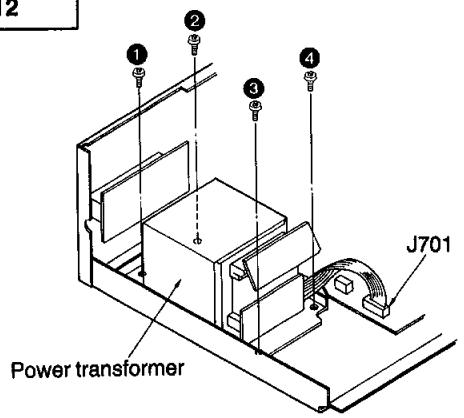

1. Remove the 1 flat cable (J701).
2. Remove the 4 screws (❶~❹).

"ATTENTION SERVICER"

Some chassis components may have sharp edges. Be careful when disassembling and servicing.

●Replacement of the Foot.

1. Remove the 4 heat melted posts on the chassis with a pair of nippers or similar tool.
2. To replace the foot (RKA0011-2) on the chassis, melt the 4 posts with a soldering iron.

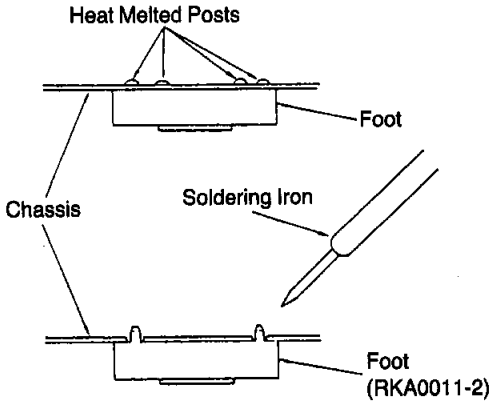

■ SCHEMATIC DIAGRAM

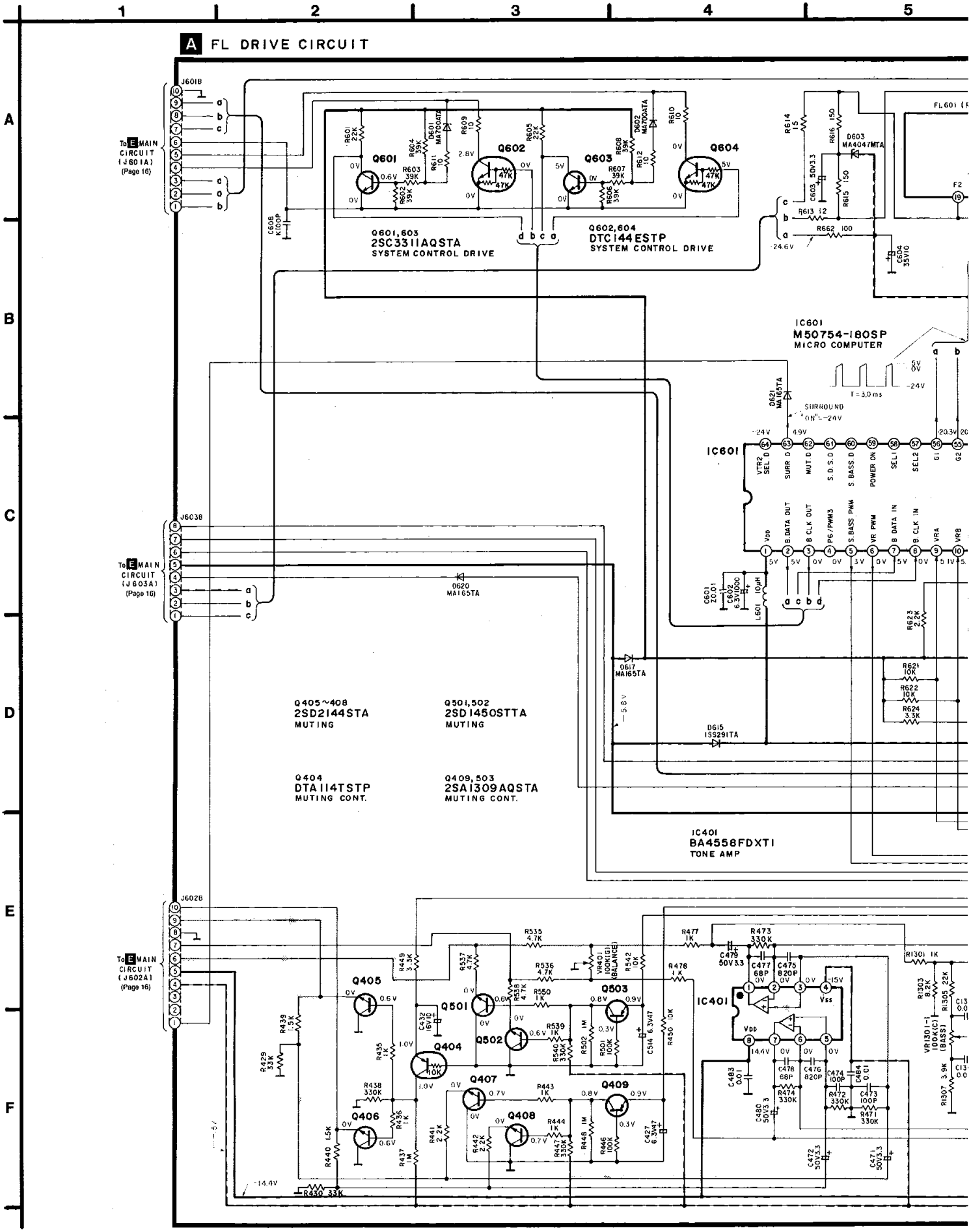

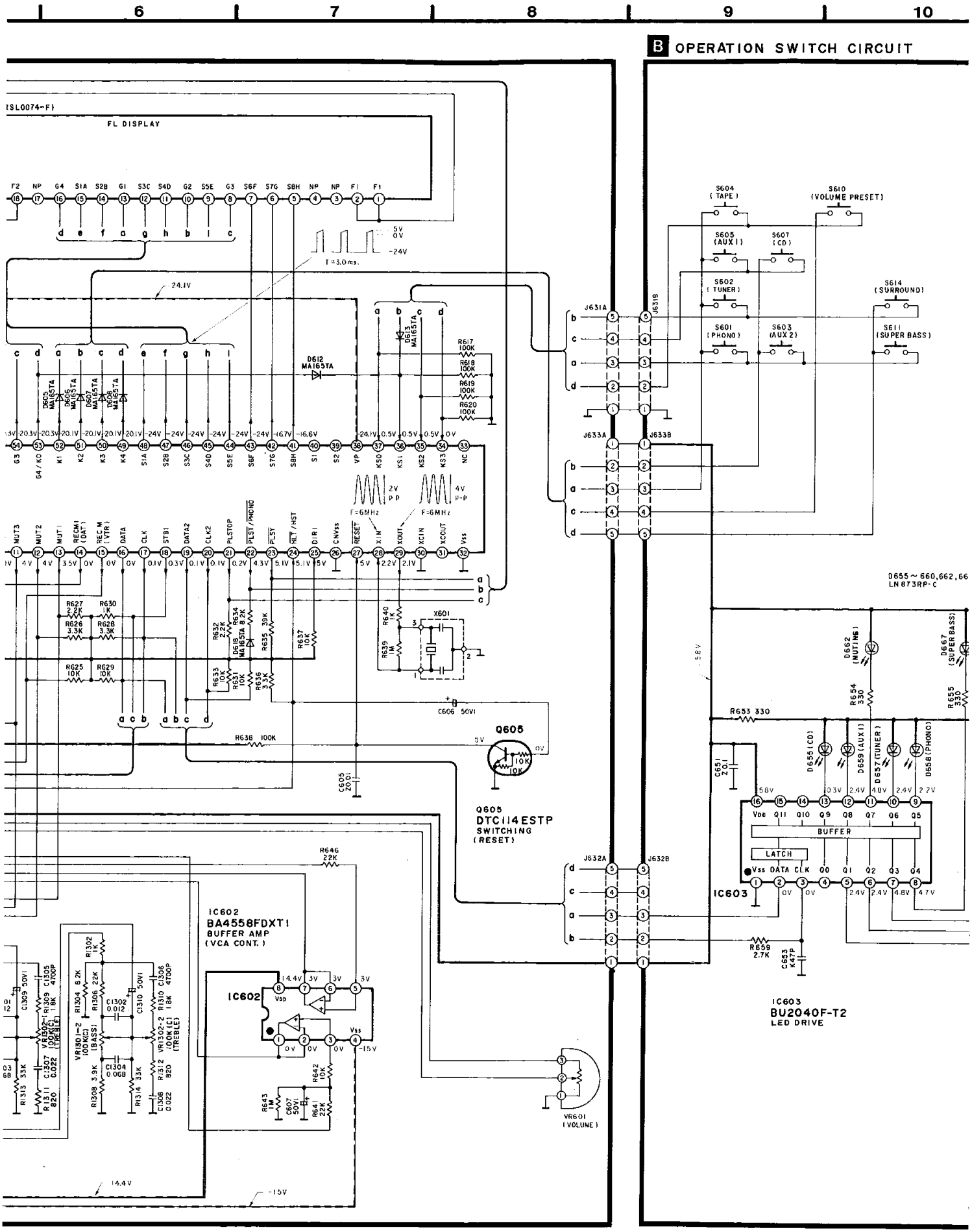
6
7
8
9
10
B OPERATION SWITCH CIRCUIT
(SL0074-F)
FL DISPLAY
S604 (TAPE)
S610 (VOLUME PRESET)
S605 (AUX1)
S607 (CD)
S602 (TUNER)
S614 (SURROUND)
S601 (PHONO)
S603 (AUX2)
S611 (SUPER BASS)
J631A
J631B
J633A
J633B
J632A
J632B
Q605
DTC114ESTP
SWITCHING
(RESET)
IC602
BA4558FDXT1
BUFFER AMP
(VCA CONT.)
IC603
BU2040F-T2
LED DRIVE
BUFFER
LATCH
VR601
(VOLUME)
X601
D655~660,662,66
LN873RP-C

11 12 13 14

Notes: (This schematic diagram may be modified at any time with the development of new technology.)

- ●S601 :PHONO input switch.
- ●S602 :TUNER input switch.
- ●S603 :AUX 2 input switch.
- ●S604 :TAPE input switch.
- ●S605 :AUX 1 input switch.
- ●S607 :CD input switch.
- ●S610 :VOLUME PRESET switch.
- ●S611 :SUPER BASS switch.
- ●S614 :SURROUND switch.

CD signal (Lch), Phono signal (Lch)
Positive voltage lines (+)
Negative voltage lines (−)

- ●Indicated voltage values are the standard values for the unit measured by the DC electronic circuit tester (high-impedance) with the chassis taken as standard. Therefore, there may exist some errors in the voltage values, depending on the internal impedance of the DC circuit tester.
- ●Important safety notice:
  Components identified by ⚠ mark have special characteristics important for safety. When replacing any of these components, use only manufacturer's specified parts.

***Caution!**
IC and LSI are sensitive to static electricity.
Secondary trouble can be prevented by taking care furing repair.
*Cover the parts boxes made of plastics with aluminum foil.
*Ground the soldering iron.
*Put a conductive may on the work table.
*Do not touch the legs of IC or LSI with the fingers directly.

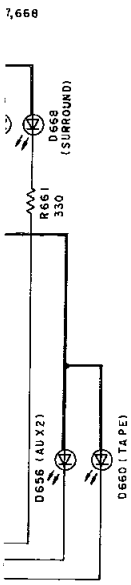

■ DESCRIPTION OF FL PANEL

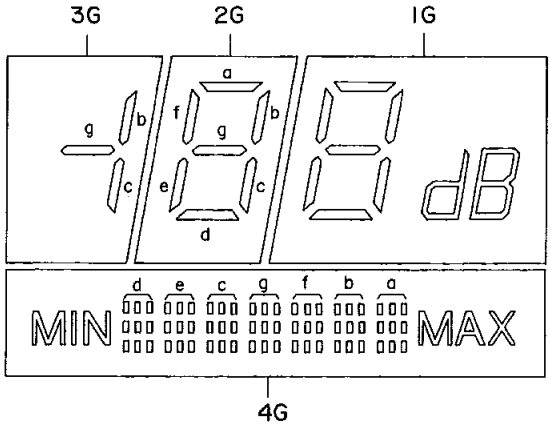

	4G	3G	2G	1G
P1	a	–	a	a
P2	b	b	b	b
P3	c	c	c	c
P4	d	–	d	d
P5	e	–	e	e
P6	f	–	f	f
P7	g	g	g	g
P8	MIN MAX	–	–	dB

PIN CONNECTION

PIN NO.	19	18	17	16	15	14	13	12	11	10	9	8	7	6	5	4	3	2	1
CONNECTION	F2	F2	NP	4G	P1	P2	3G	P3	P4	2G	P5	1G	P6	P7	P8	NP	NP	F1	F1

Notes: F1, F2 ..... Filament
NP ..... No pin
1G~4G ..... Grid

■ SCHEMATIC DIAGRAM

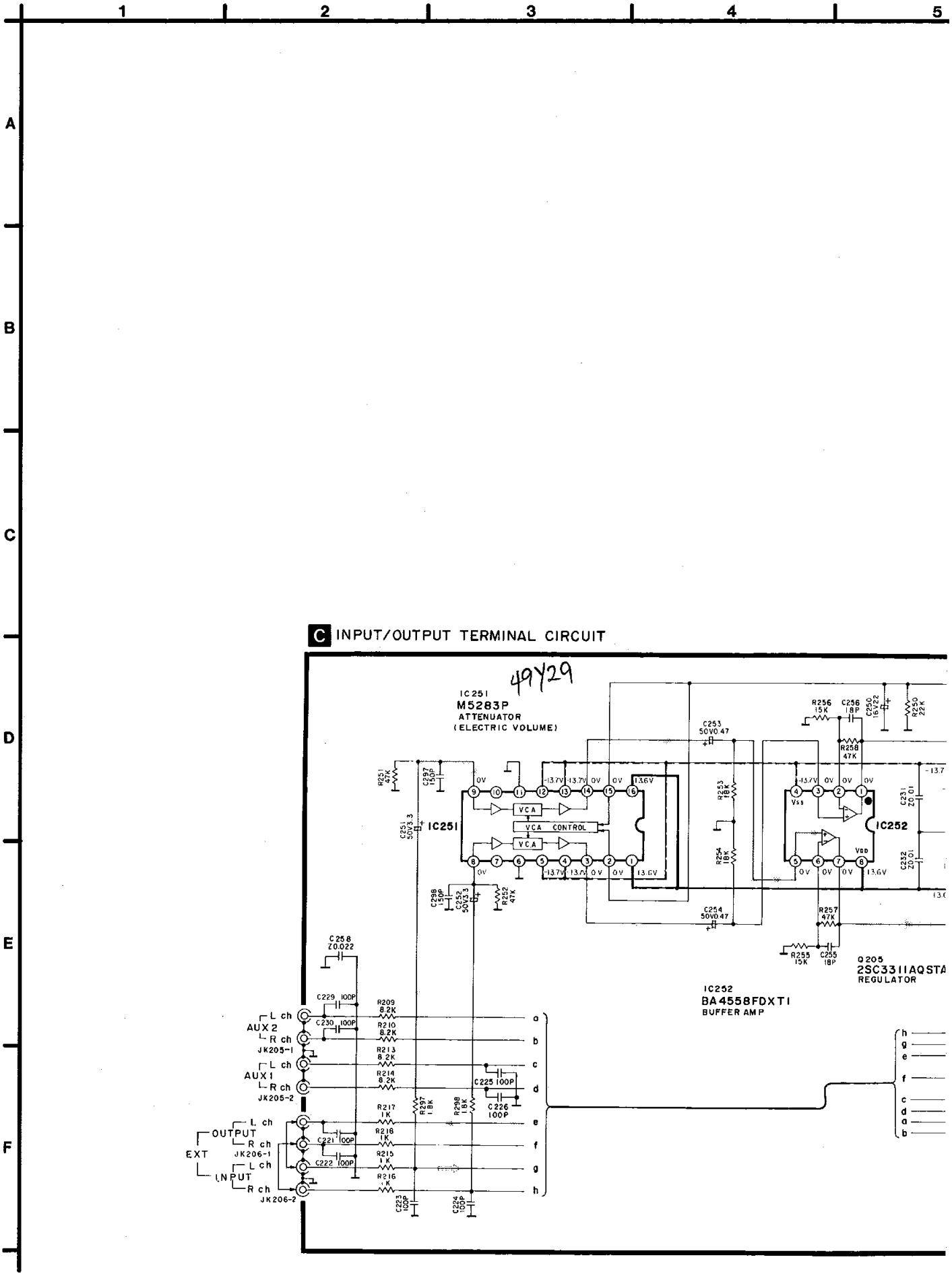

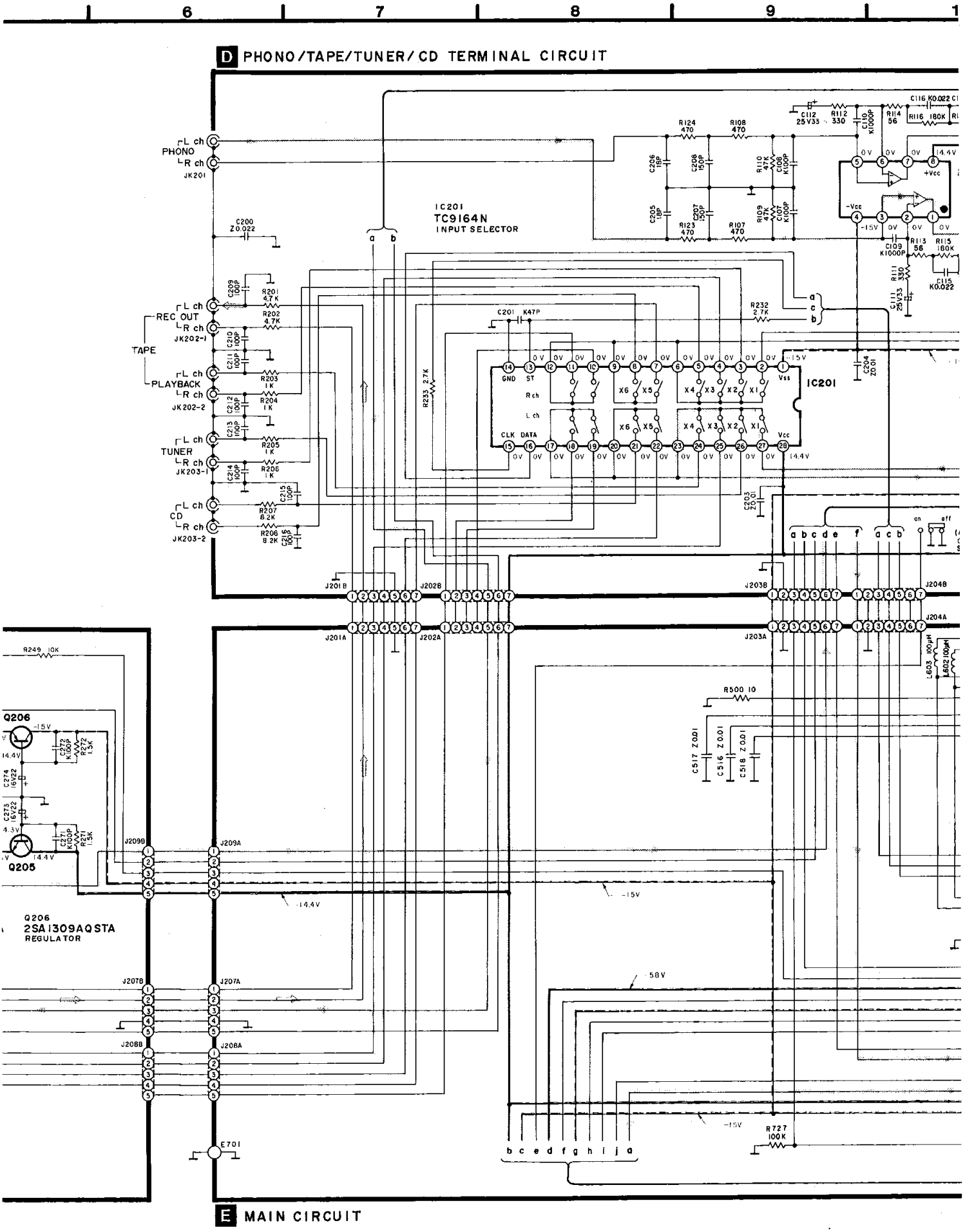
6
7
8
9
D PHONO/TAPE/TUNER/CD TERMINAL CIRCUIT
PHONO
L ch
R ch
JK201
REC OUT
JK202-1
TAPE
PLAYBACK
JK202-2
TUNER
JK203-1
CD
JK203-2
IC201
TC9164N
INPUT SELECTOR
GND
ST
Vss
Vcc
CLK
DATA
Q206
2SA1309AQSTA
REGULATOR
Q205
E701
E MAIN CIRCUIT

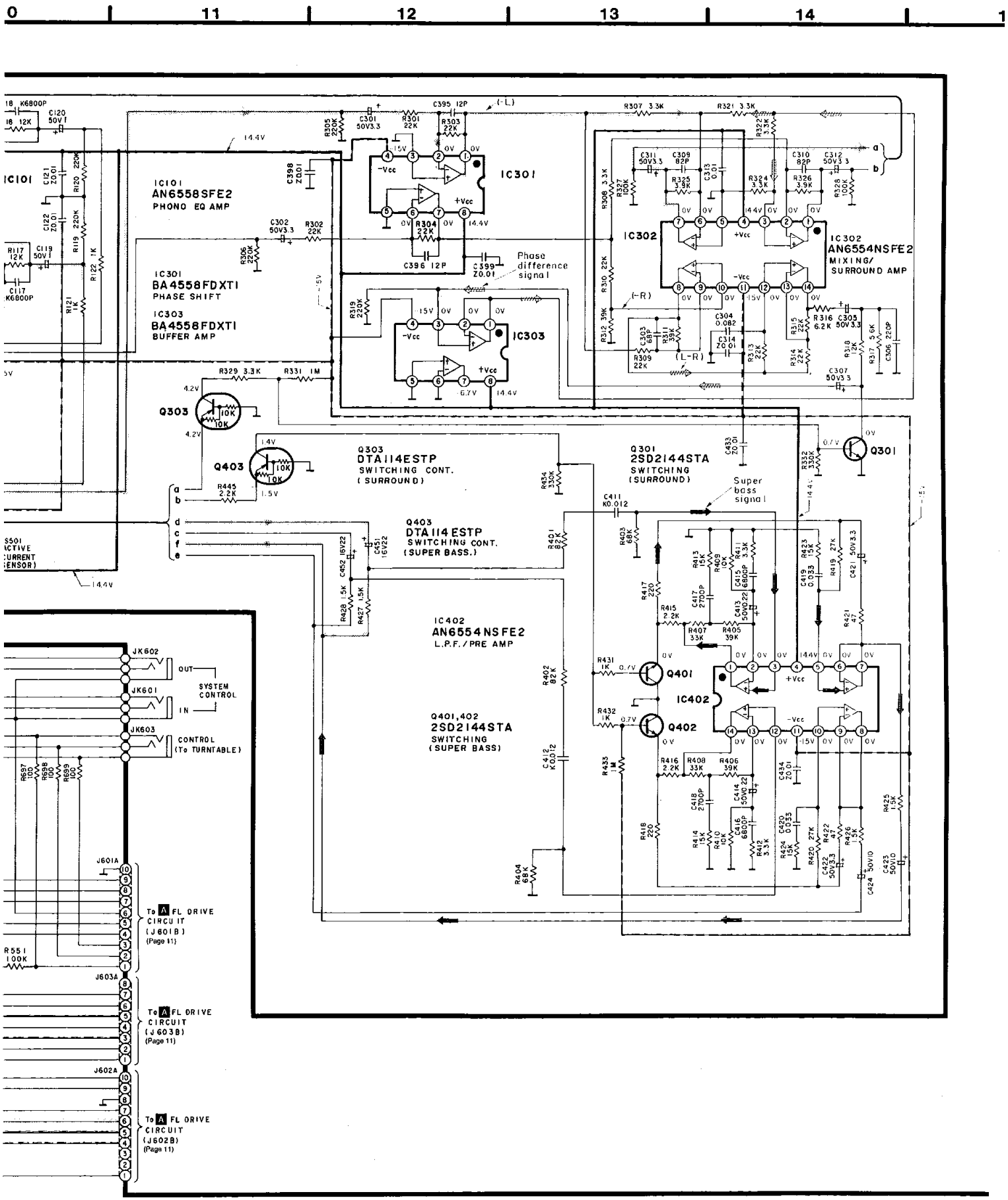
IC101
AN6558SFE2
PHONO EQ AMP
IC301
BA4558FDXTI
PHASE SHIFT
IC303
BA4558FDXTI
BUFFER AMP
IC302
AN6554NSFE2
MIXING/
SURROUND AMP
Phase difference signal
Q303
DTA114ESTP
SWITCHING CONT.
(SURROUND)
Q403
DTA114ESTP
SWITCHING CONT.
(SUPER BASS.)
Q301
2SD2144STA
SWITCHING
(SURROUND)
Super bass signal
IC402
AN6554NSFE2
L.P.F./PRE AMP
Q401,402
2SD2144STA
SWITCHING
(SUPER BASS)
Q401
Q402
JK602
JK601
JK603
OUT
IN
SYSTEM CONTROL
CONTROL (To TURNTABLE)
J601A
To A FL DRIVE CIRCUIT (J601B) (Page 11)
J603A
To A FL DRIVE CIRCUIT (J603B) (Page 11)
J602A
To A FL DRIVE CIRCUIT (J602B) (Page 11)

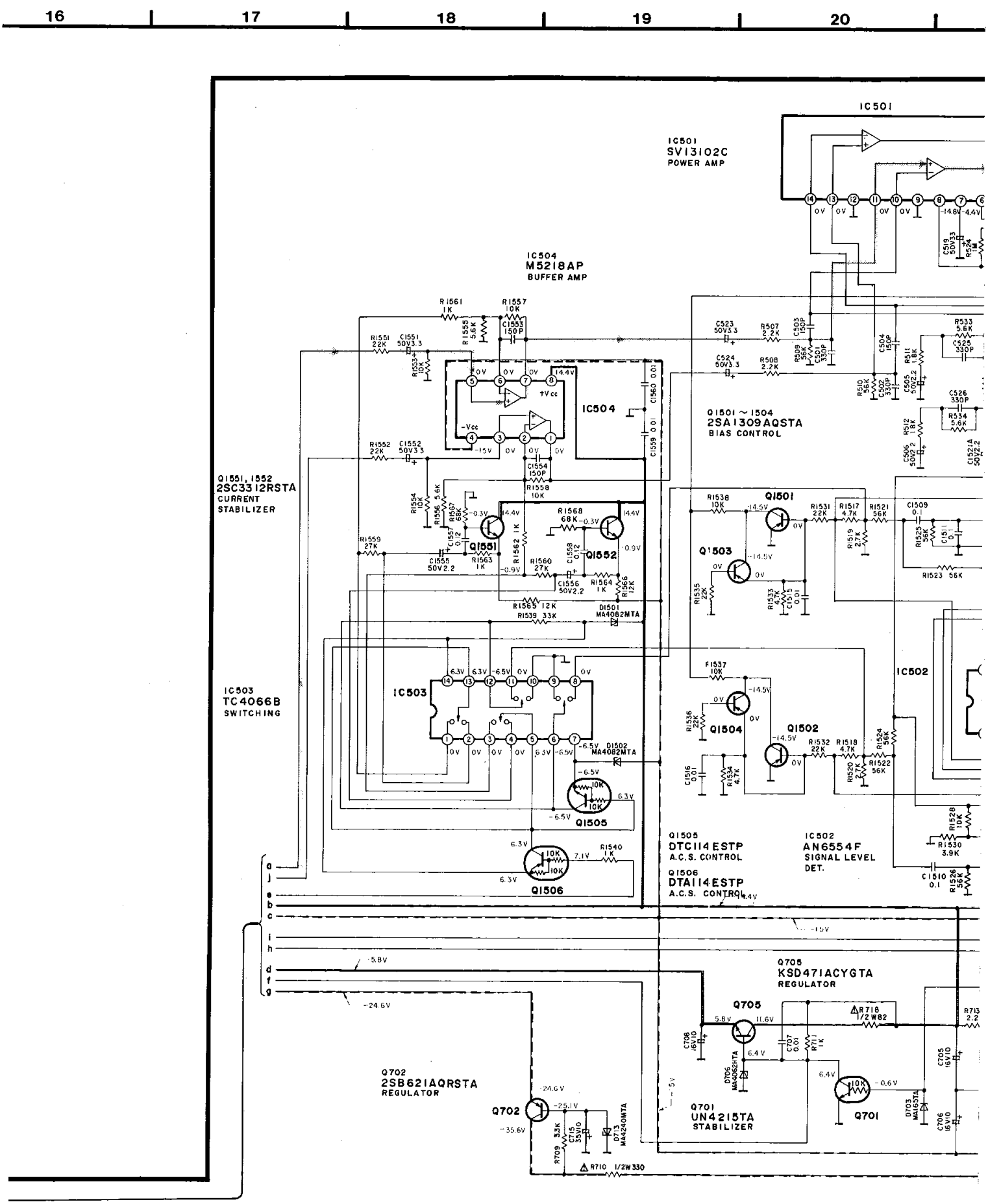
16
17
18
19
20
IC501
IC501
SV13102C
POWER AMP
IC504
M5218AP
BUFFER AMP
Q1501 ~ 1504
2SA1309AQSTA
BIAS CONTROL
Q1551, 1552
2SC3312RSTA
CURRENT
STABILIZER
IC503
TC4066B
SWITCHING
Q1505
DTC114ESTP
A.C.S. CONTROL
Q1506
DTA114ESTP
A.C.S. CONTROL
IC502
AN6554F
SIGNAL LEVEL
DET.
Q705
KSD471ACYGTA
REGULATOR
Q702
2SB621AQRSTA
REGULATOR
Q701
UN4215TA
STABILIZER

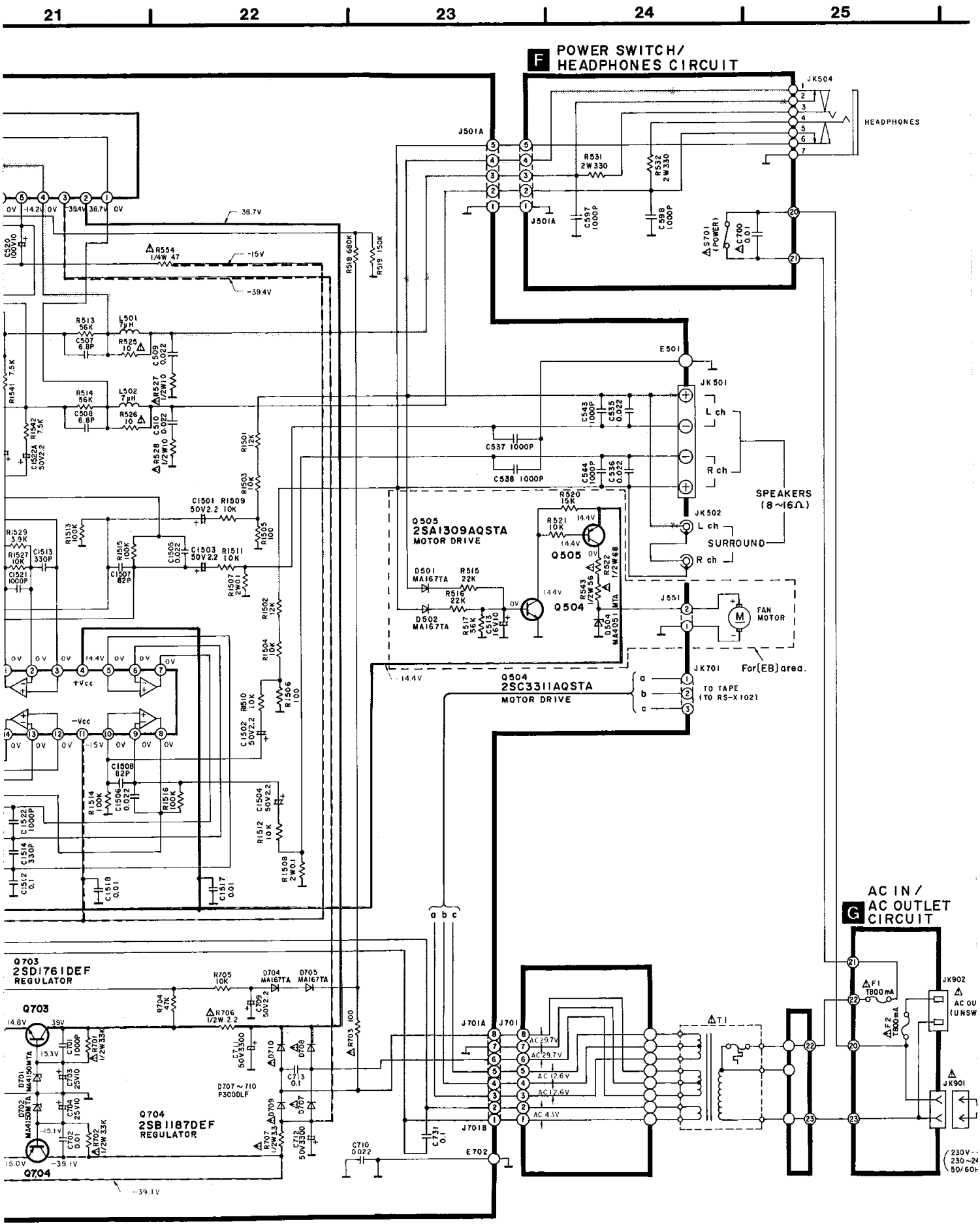
21
22
23
24
25
F POWER SWITCH/ HEADPHONES CIRCUIT
JK504
HEADPHONES
J501A
R531 2W330
R532 2W330
C597 1000P
C598 1000P
S701 (POWER)
C700 0.01
E501
JK501
L ch
R ch
SPEAKERS (8~16Ω)
C543 1000P
C535 0.022
C537 1000P
C538 1000P
C544 1000P
C536 0.022
JK502
SURROUND
Q505 2SA1309AQSTA MOTOR DRIVE
Q504 2SC3311AQSTA MOTOR DRIVE
D501 MA167TA
D502 MA167TA
R515 22K
R516 22K
R517 56K
C513 16V10
R520 15K
R521 10K
R522 1/2W68
R543 1/2W56
D504 MA4051 MTA
J551
FAN MOTOR
JK701
For[EB]area.
TO TAPE (TO RS-X1021)
38.7V
-15V
-39.4V
R554 1/4W 47
R518 680K
R519 150K
R513 56K
L501 7μH
R525 10
C507 6.8P
C509 0.022
R527 1/2W10
R514 56K
L502 7μH
R526 10
C508 6.8P
C510 0.022
R528 1/2W10
R541 7.5K
R542 7.5K
C1524 50V2.2
R501 12K
R503 10K
C1501 50V2.2
R1509 10K
R1505 100
R1529 3.9K
R1527 10K
C1521 1000P
C1513 330P
R1513 100K
R1515 100K
C1507 82P
C1505 0.022
C1503 50V2.2
R1511 10K
R1507 2W0.1
R1502 22K
R1504 10K
R1506 100
R1510 10K
C1502 50V2.2
+Vcc
-Vcc
C1508 82P
C1506 0.022
R1514 100K
R1516 100K
C1504 50V2.2
R1512 10K
R1508 2W0.1
C1522 1000P
C1514 330P
C1512 0.1
C1518 0.01
C1517 0.01
Q703 2SD1761DEF REGULATOR
Q704 2SB1187DEF REGULATOR
R705 10K
D704 MA167TA
D705 MA167TA
R704 47K
R706 1/2W 2.2
C709 50V2.2
C711 50V3300
D710
D708
C713 0.1
D707~710 P300DLF
D709
D707
C712 50V3300
R703 100
R701 1/2W33K
R702 1/2W33K
R707 1/2W33
C701 1000P
C703 25V10
C704 25V10
C702 0.01
D701 MA4150MTA
D702 MA4150MTA
J701A
J701
J701B
E702
C710 0.022
C731 0.1
AC 29.7V
AC 29.7V
AC 12.6V
AC 12.6V
AC 43V
T1
G AC IN/ AC OUTLET CIRCUIT
F1 T800mA
F2 T800mA
JK902
JK901
230V~
230~24
50/60H

26 | 27 | 28 | 29 | 30

Notes: (This schematic diagram may be modified at any time with the development of new technology.)

- **S501** : Active sensor switch in **"OFF"** position.
- **S701** : POWER switch in **"ON"** position.
- **S702** : Voltage select switch in **"220 V"** position. [for (GC) only]

CD signal (Lch), Phono signal (Lch)
Positive voltage lines (+)
Negative voltage lines (−)
Super bass signal
Phase difference signal
Recording signal

- Indicated voltage values are the standard values for the unit measured by the DC electronic circuit tester (high-impedance) with the chassis taken as standard. Therefore, there may exist some errors in the voltage values, depending on the internal impedance of the DC circuit tester.
- Important safety notice:
  Components identified by ⚠ mark have special characteristics important for safety. When replacing any of these components, use only manufacturer's specified parts.

***Caution!**
IC and LSI are sensitive to static electricity.
Secondary trouble can be prevented by taking care furing repair.
*Cover the parts boxes made of plastics with aluminum foil.
*Ground the soldering iron.
*Put a conductive may on the work table.
*Do not touch the legs of IC or LSI with the fingers directly.

Power Source Circuit For [GC] area.

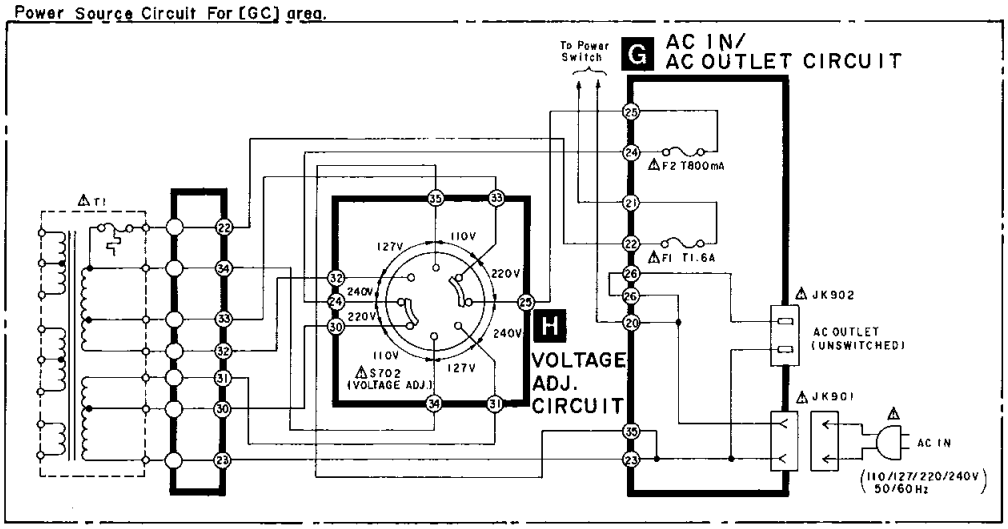

Power Source Circuit For [GN] area.

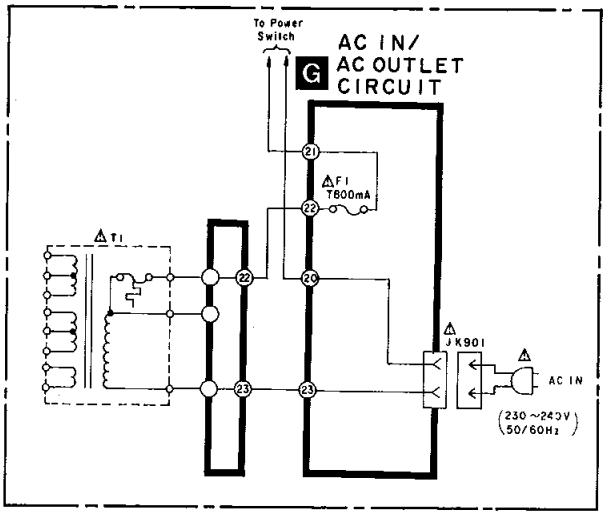

■ CIRCUIT BOARD DIAGRAM

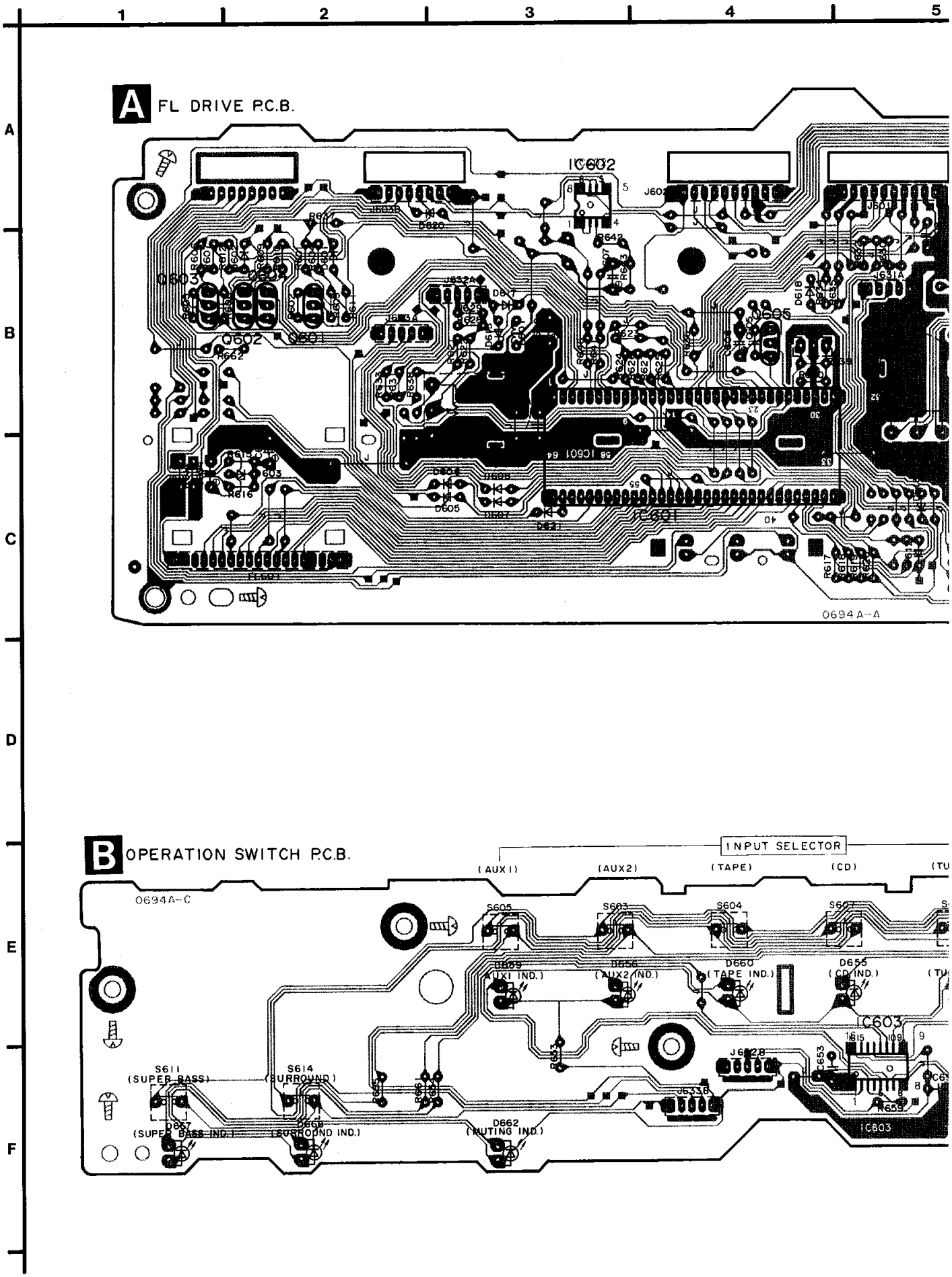

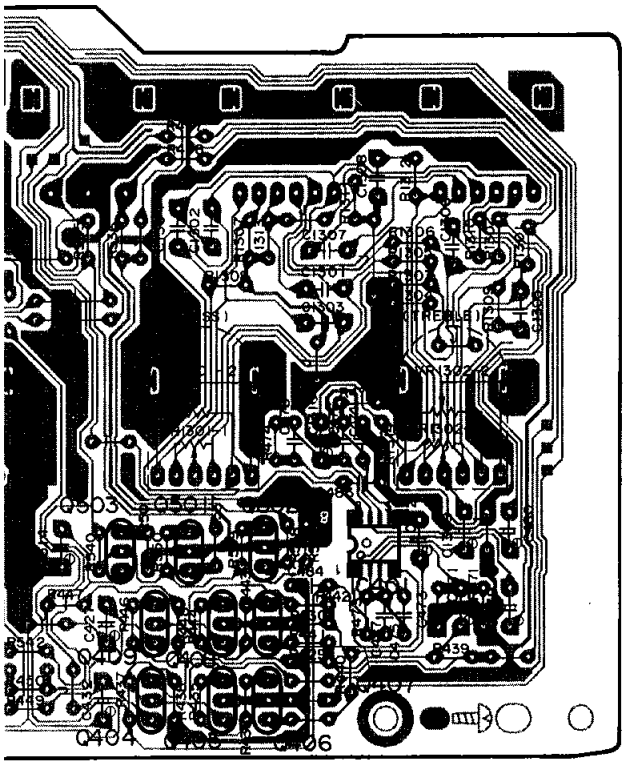

E MAIN P.C.B.

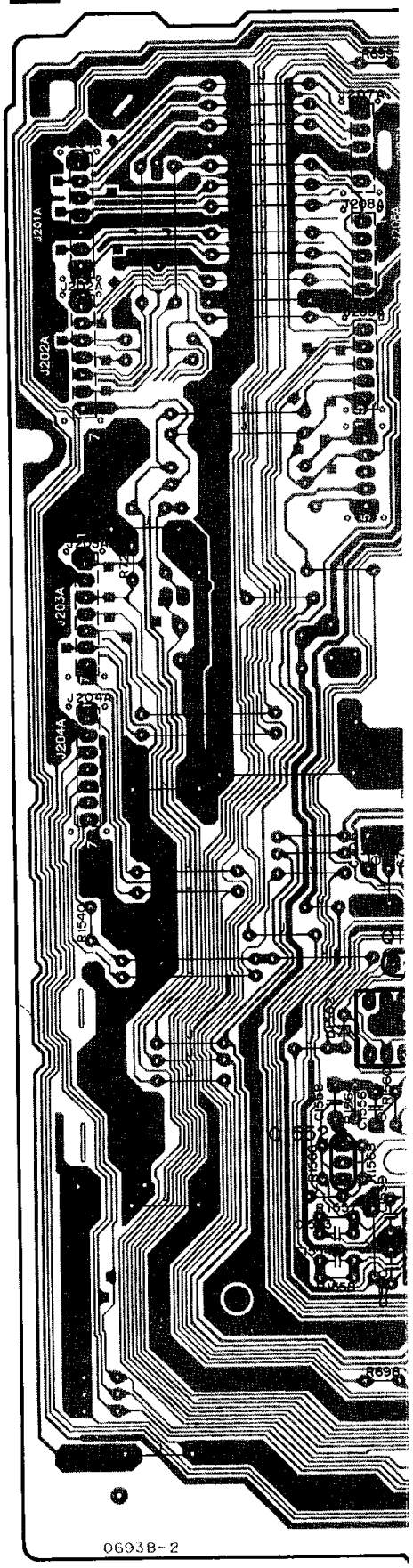

F POWER SWITCH/HEADPHONES P.C.B.

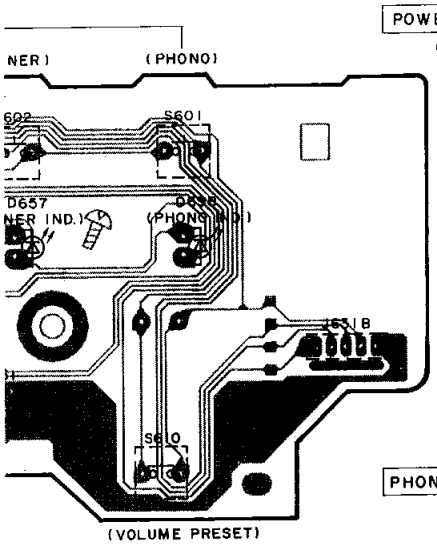

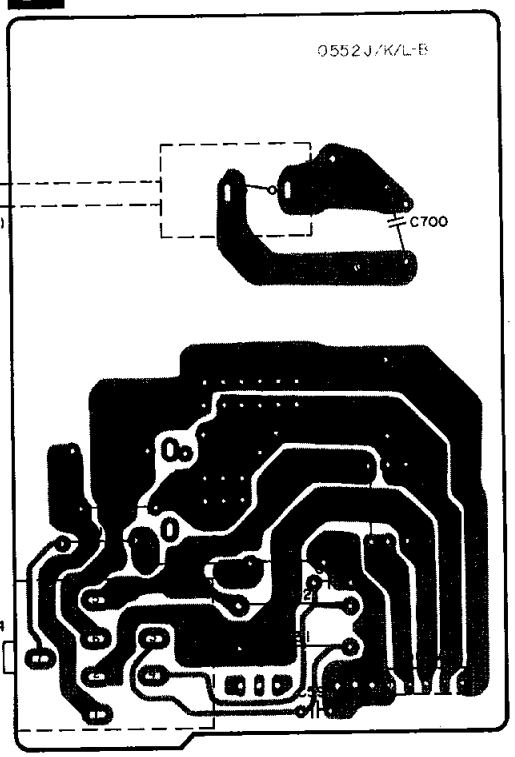

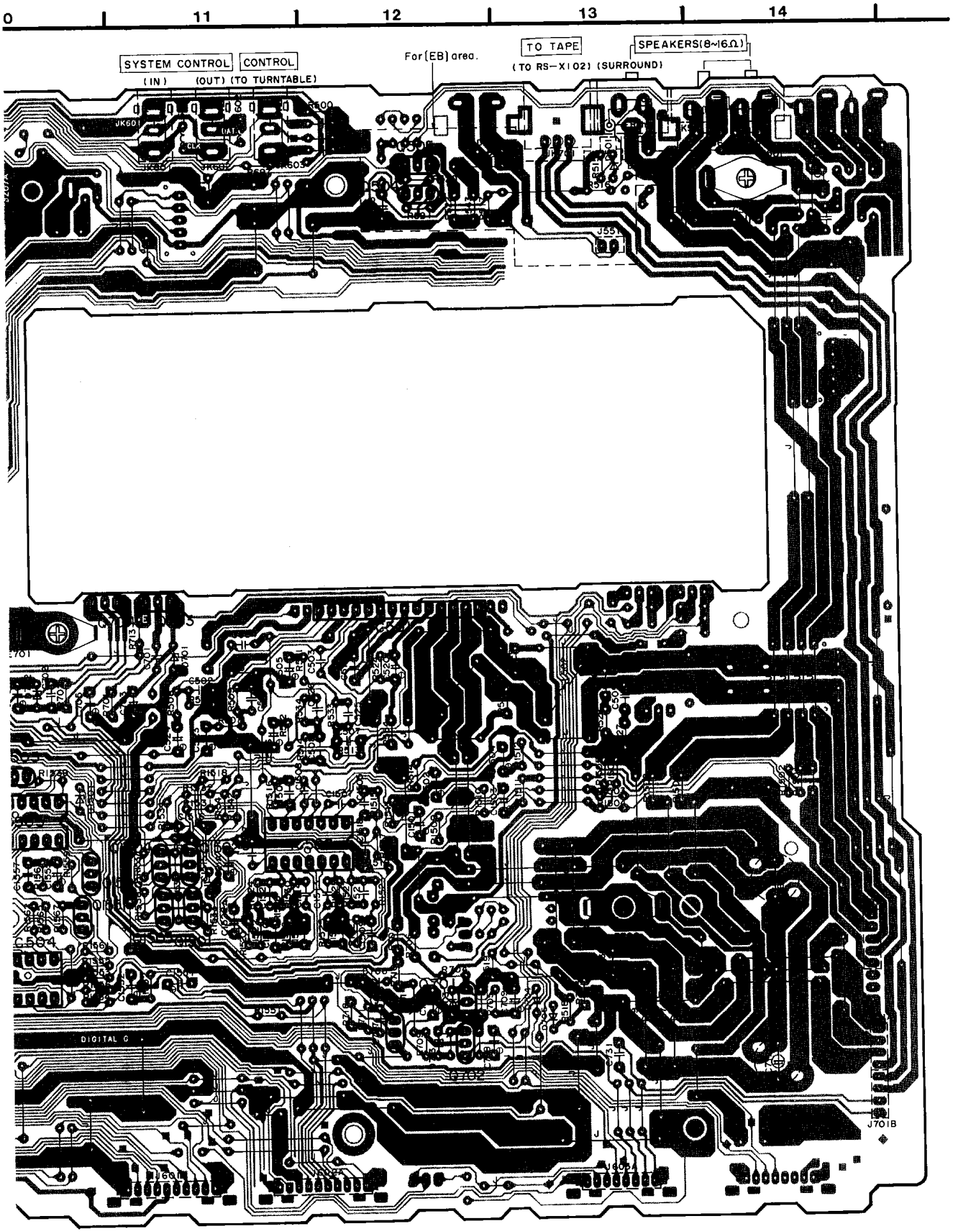
0
11
12
13
14
SYSTEM CONTROL
(IN)
CONTROL
(OUT) (TO TURNTABLE)
For (EB) area.
TO TAPE
(TO RS-X102) (SURROUND)
SPEAKERS(8~16Ω)
JK601
DIGITAL G
J701B

■ CIRCUIT BOARD DIAGRAM

1 2 3 4 5

A B C D E F

C INPUT/OUTPUT TERMINAL P.C.B.

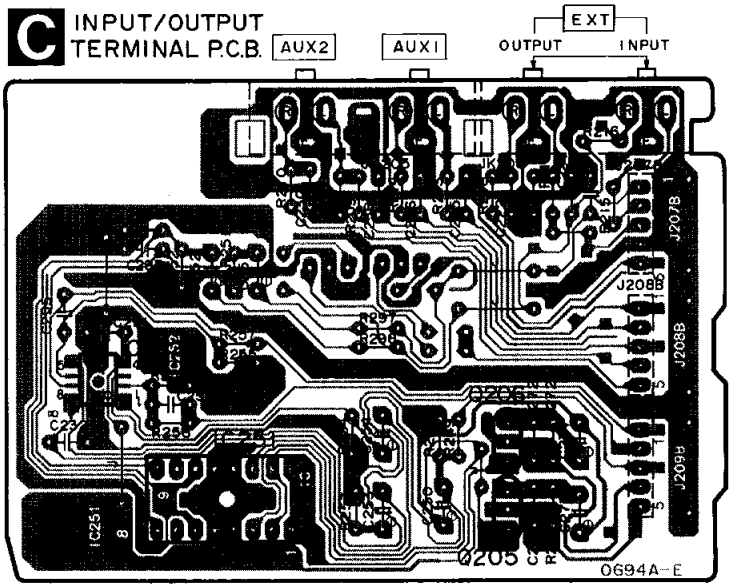

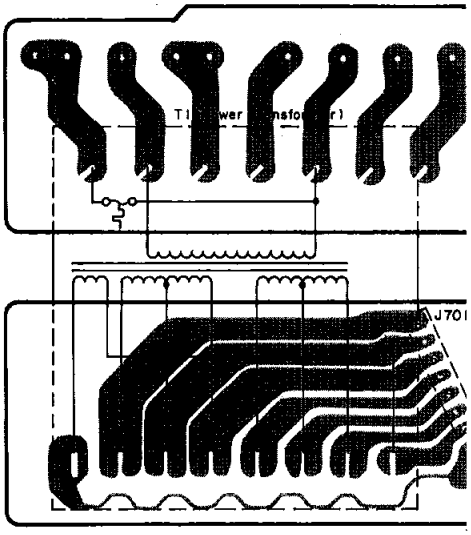

D PHONO/TAPE/TUNER/CD TERMINAL P.C.B.

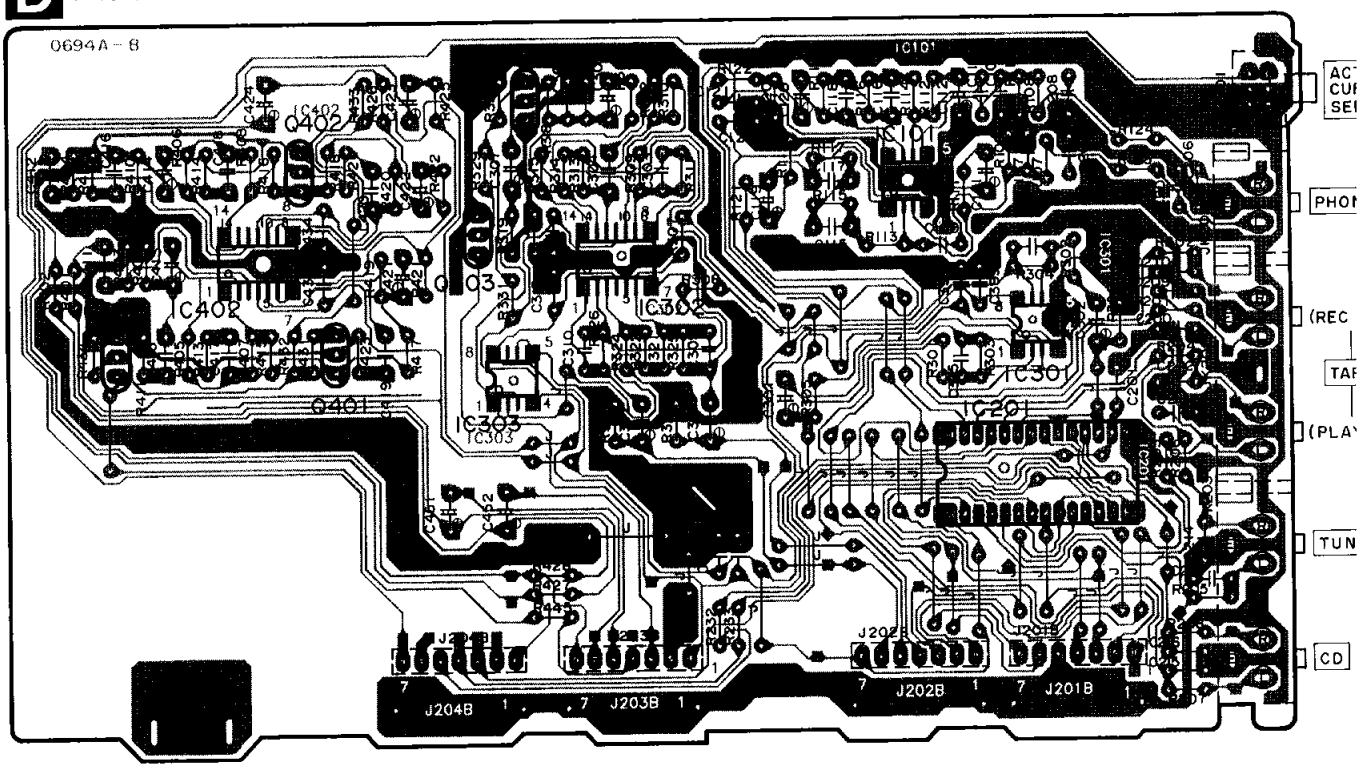

6 7 8 9 10

G AC IN/AC OUTLET P.C.B. For[E,EB,EG]AREAS.

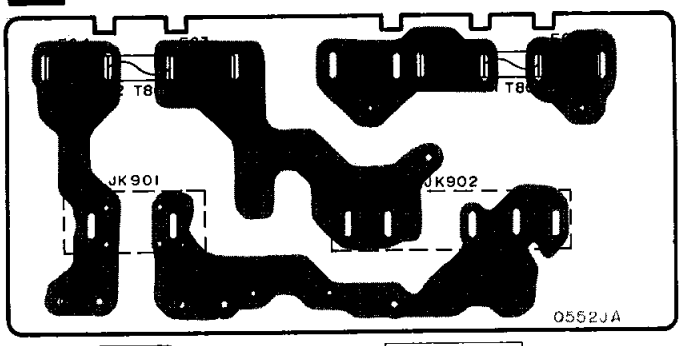

AC IN
(230V·····(E, EG)
230~240V····(EB)
50/60Hz)

AC OUTLET
(UNSWITCHED)

G AC IN/AC OUTLET P.C.B. For[G

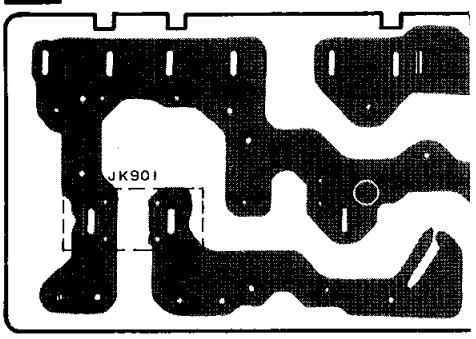

AC IN
(230~240V 50/60Hz)

Power Source P.C.B. For[GC]area.

To Power Switch

H VOLTAGE ADJ. P.C.B.

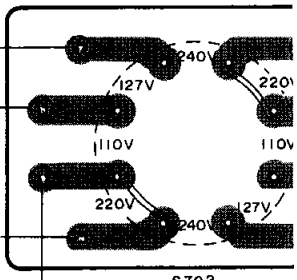

S702

VOLTAGE ADJ.

G AC IN/AC OUTLET P.C.B.

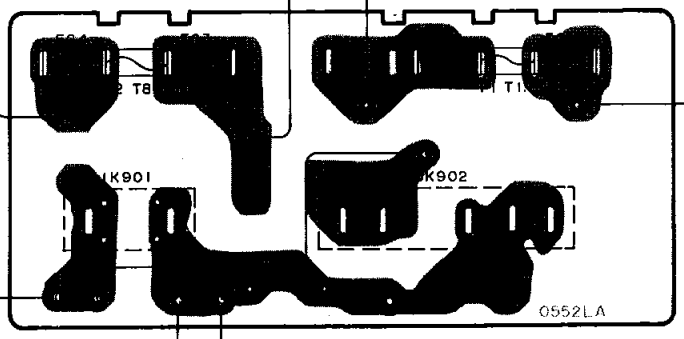

BRN
BRN
BLK
BRN
GRY
GRY
BLK
WHT
BRN
RED
BLU

AC IN
(110/127/220/240V 50/60Hz)

AC OUTLET
(UNSWITCHED)

11 12 13 14

■ TERMINAL GUIDE OF IC'S, TRANSISTOR AND DIODES

N] AREA .

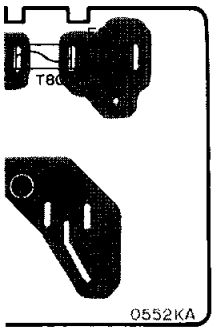

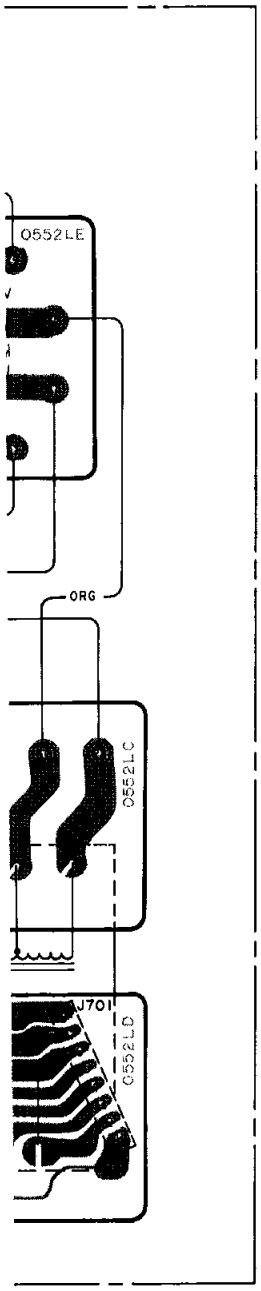

AN6558SFE2 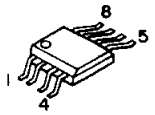	BA4558FDXT1 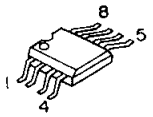	AN6554NSFE2 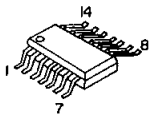	BU2040F-T2 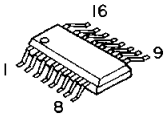
M5218AP 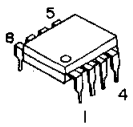	AN6554F 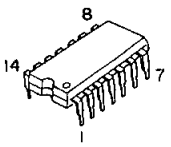	TC4066B 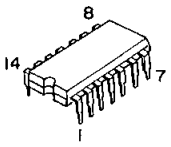	M5283P 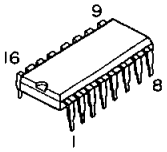
TC9164N 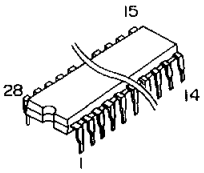	M50754-180SP 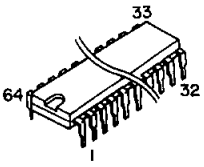	SVI3102C 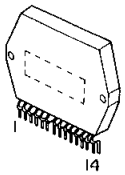	2SB621AQRSTA KSD471ACYGTA 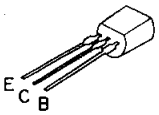
	2SA1309AQSTA 2SC3311AQSTA 2SC3312RSTA 2SD1450STTA UN4215TA	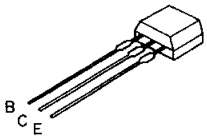	2SD2144STA DTA114ESTP DTC114ESTP DTC144ESTP
2SB1187DEF 2SD1761DEF 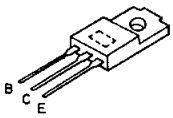	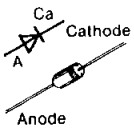	MA165TA MA167TA MA700TA 1SS291TA	P300DLF 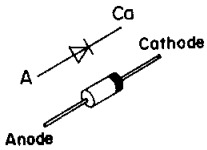
MA4150MTA MA4240MTA 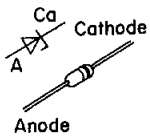	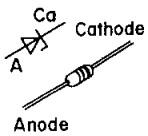	MA4047MTA MA4051MTA MA4062HTA MA4082MTA	LN873RP-C 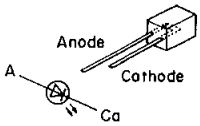

■ WIRING CONNECTION DIAGRAM

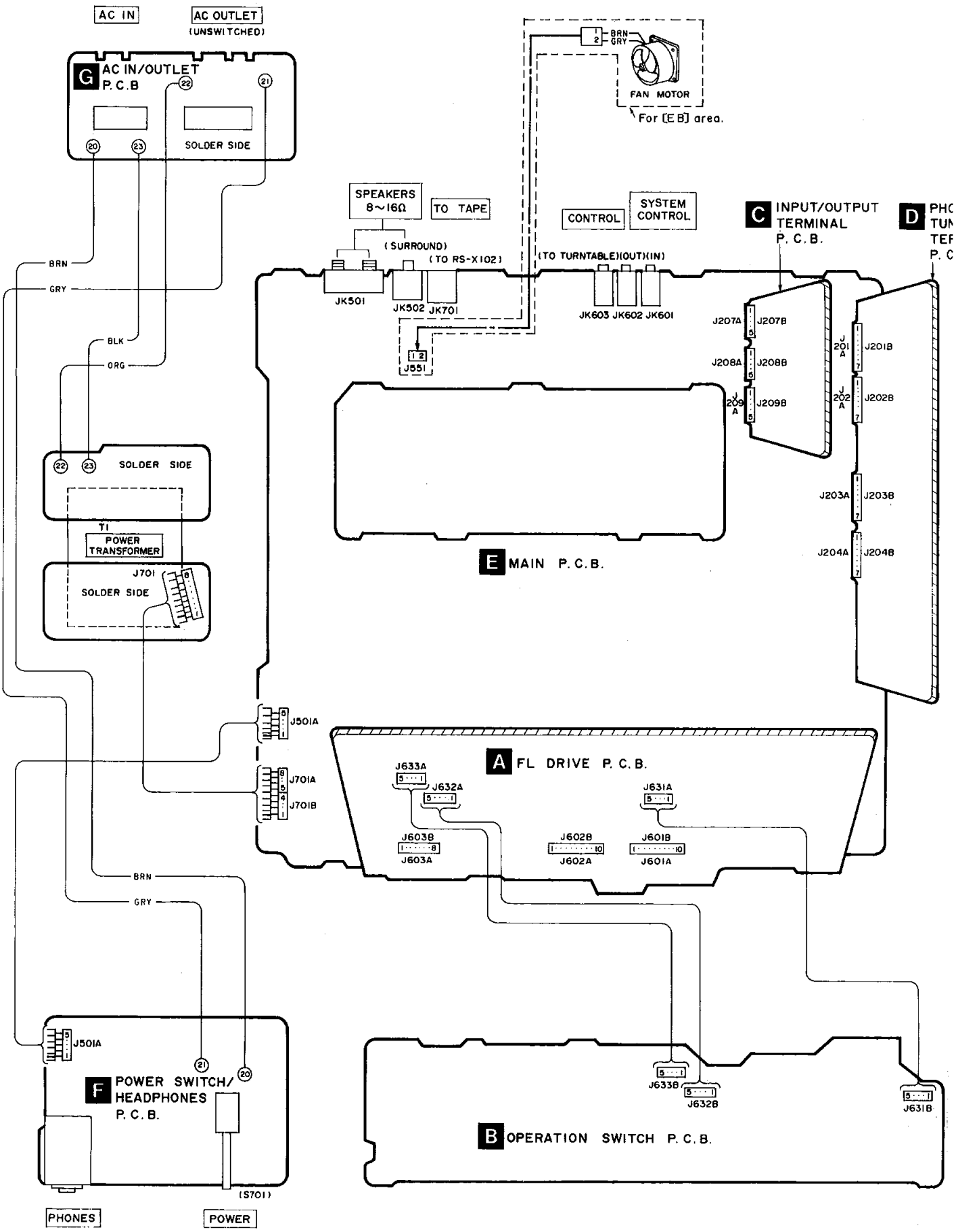

■ BLOCK DIAGRAM

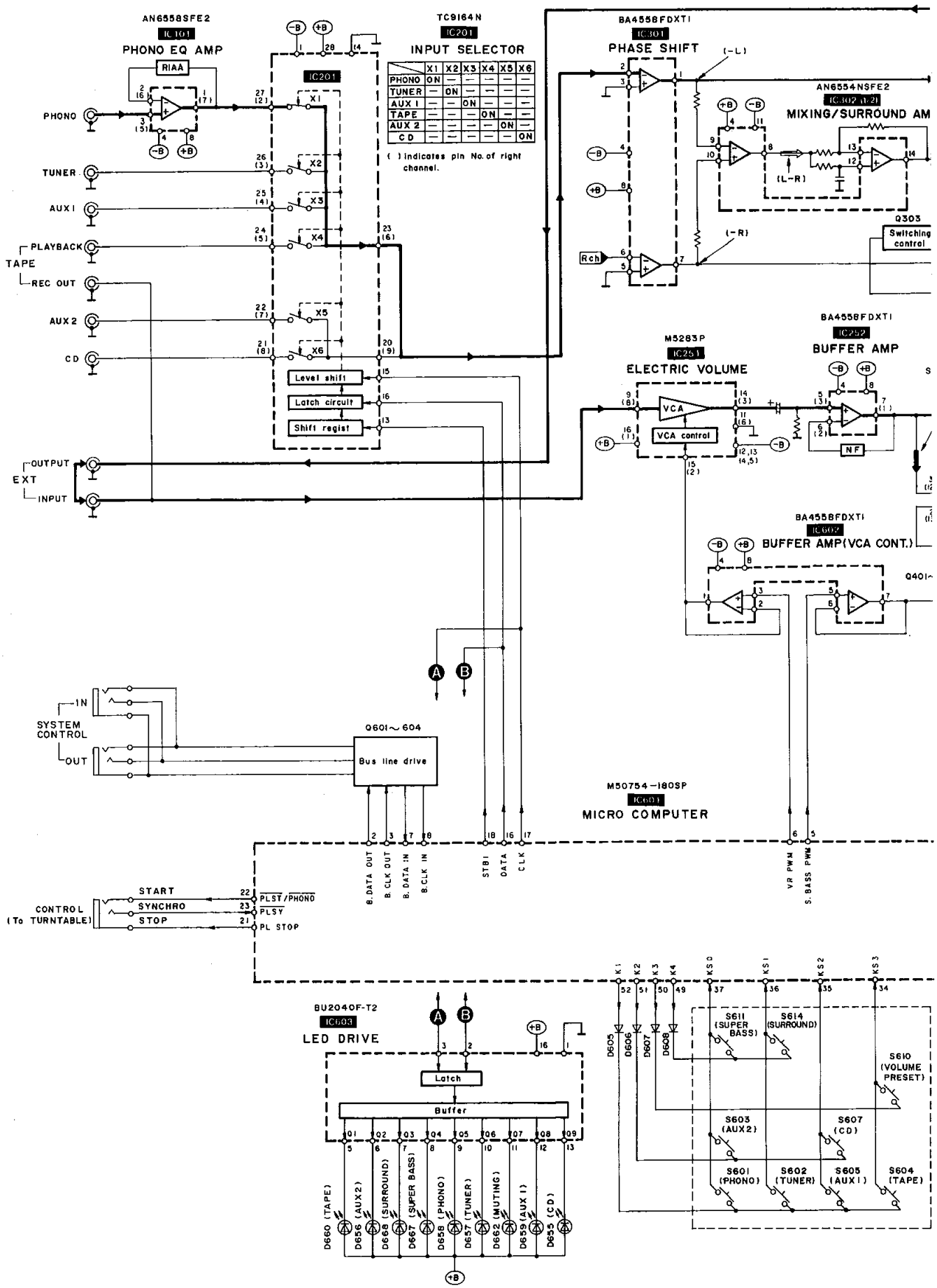

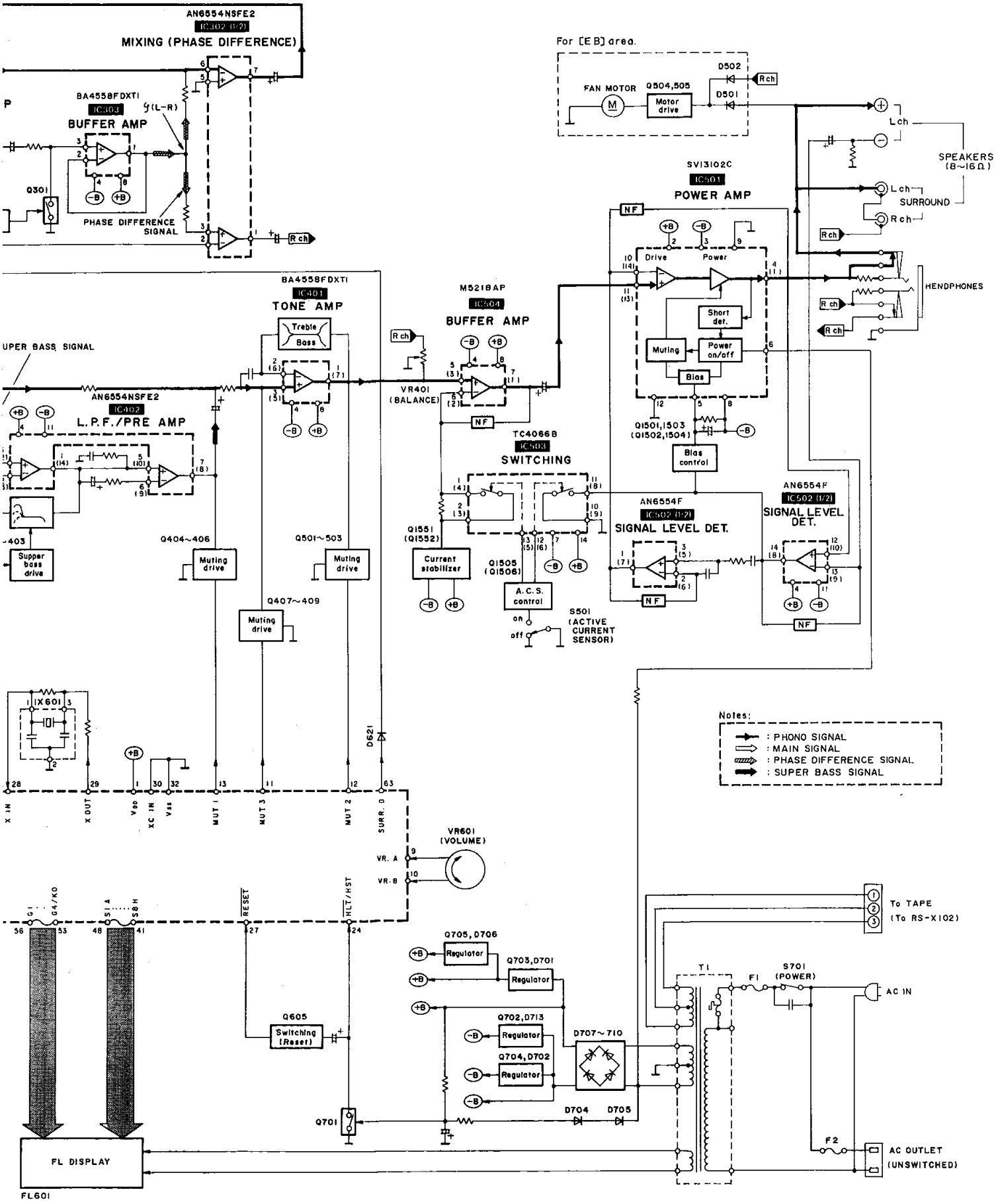
AN6554NSFE2
IC302 (1/2)
MIXING (PHASE DIFFERENCE)
BA4558FDXTI
IC303
BUFFER AMP
Q301
PHASE DIFFERENCE SIGNAL
R ch
For [E B] area.
FAN MOTOR
Q504,505
Motor drive
D502
D501
L ch
SPEAKERS (8~16Ω)
SURROUND
SV13102C
IC501
POWER AMP
NF
Drive
Power
Short det.
Muting
Power on/off
Bias
Q1501,1503
(Q1502,1504)
Bias control
HEADPHONES
BA4558FDXTI
IC401
TONE AMP
Treble
Bass
M5218AP
IC504
BUFFER AMP
VR401 (BALANCE)
AN6554NSFE2
IC402
L.P.F./PRE AMP
Supper bass drive
Q404~406
Muting drive
Q501~503
Muting drive
Q407~409
Muting drive
TC4066B
IC503
SWITCHING
Q1551 (Q1552)
Current stabilizer
Q1505 (Q1506)
A.C.S. control
on
off
S501 (ACTIVE CURRENT SENSOR)
AN6554F
IC502 (1/2)
SIGNAL LEVEL DET.
AN6554F
IC502 (1/2)
SIGNAL LEVEL DET.
Notes:
: PHONO SIGNAL
: MAIN SIGNAL
: PHASE DIFFERENCE SIGNAL
: SUPER BASS SIGNAL
X601
D621
X IN
X OUT
Vdd
XC IN
Vss
MUT 1
MUT 3
MUT 2
SURR. D
VR601 (VOLUME)
VR. A
VR. B
RESET
HLT/HST
Q705, D706
Regulator
Q703, D701
Regulator
Q702, D713
Regulator
Q704, D702
Regulator
D707~710
Q605
Switching (Reset)
Q701
D704
D705
T1
F1
S701 (POWER)
AC IN
F2
AC OUTLET (UNSWITCHED)
To TAPE (To RS-X102)
FL DISPLAY
FL601

■ FUNCTIONS OF IC TERMINALS

•IC601 (M50754-180SP: MICRO COMPUTER)

Pin No.	Symbol	I/O	Function Description
1	VDD	—	To be connected to a power supply (+5 V).
2	B.DATA OUT	O	This is the output terminal for the bus data signal.
3	B.CLK OUT	O	This is the output terminal for the bus block signal.
5	S.BASS PWM	O	This is the output terminal for the super bass control signal.
6	VR PWM	O	This terminal outputs the signal for the control of the volume.
7	B.DATA IN	I	This is the input terminal for the bus data signal.
8	B.CLK IN	I	This is the input terminal for the bus clock signal.
9	VR A	I	These are the terminals for the rotary encoder of the volume of VR601.
10	VR B		
11	MUT 3	O	Outputs the −6 dB signal for control of attenuated muting.
12	MUT 2		
13	MUT 1	O	Output the signal for the control of muting.
15	REC M	O	Output the signal for muting the VTR 1 recording.
16	DATA	O	These are output terminal for data and clock signals.
17	CLK		
18	STB 1	O	The serial data inputted into IC201 is latched by the STB pulse and the switch is set to ON according to data.
19	DATA 2	O	These are output terminal for data and clock signals.
20	CLK 2		
21	PLSTOP	I	These are the terminals for sync recording on the player.
22	$\overline{\text{PLST}}$/PHONO	O	
23	$\overline{\text{PLSY}}$	I	
24	$\overline{\text{HLT}}$/.HST	I	This is the terminal for the detection of power supply.
25	KS4	I	This is the key scan terminal.
27	$\overline{\text{RESET}}$	I	This is the input terminal for the reset signal.
28	X IN	I	These are the I/O terminals for the oscillating clock signal.
29	X OUT	O	
34 ~ 37	KS 3 ~ KS 0	I	These are the key scan terminals.
41 ~ 48	S8 ~ S1	O	There terminals output signals for the control of the FL display.
49 ~ 56	G5/K4 ~ G1/K0		
63	SURR.D	O	This is the output terminal for the surround signal.

■ REPLACEMENT PARTS LIST

Notes : * Important safety notice:
Components identified by ⚠ mark have special characteristics important for safety. When replacing any of these components use only manufacturer's specified parts.
* The parenthesized indications in the Remarks columns specify the areas. (Refer to the cover page for area.)
Parts without these indications can be used for all areas.

Ref. No.	Part No.	Part Name & Description	Remarks
		INTEGRATED CIRCUIT(S)	
IC101	AN6558SFE2	I. C, PHONO EQ AMP	
IC201	TC9164N	I. C, INPUT SELECTOR	
IC251	M5283P	I. C, ATTENUATOR	
IC252	BA4558FDXT1	I. C, BUFFER AMP	
IC301	BA4558FDXT1	I. C, PHASE SHIFT	
IC302	AN6554NSFE2	I. C, MIXING/SURROUND AMP	
IC303	BA4558FDXT1	I. C, BUFFER AMP	
IC401	BA4558FDXT1	I. C, TONE AMP	
IC402	AN6554NSFE2	I. C, L. P. F/PRE AMP	
IC501	SVI3102C	I. C, POWER AMP	
IC502	AN6554F	I. C, SIGNAL LIVEL DET.	
IC503	TC4066B	I. C, SWITCHING	
IC504	M5218AP	I. C, BUFFER AMP	
IC601	M50754-180SP	I. C, MICRO COMPUTER	
IC602	BA4558FDXT1	I. C, BUFFER AMP	
IC603	BU2040F-T2	I. C, LED DRIVE	
		TRANSISTOR(S)	
Q205	2SC3311A-Q	TRANSISTOR	
Q206	2SA1309A-R	TRANSISTOR	
Q301	2SD2144S	TRANSISTOR	
Q303	DTA114ESTP	TRANSISTOR	
Q401, 402	2SD2144S	TRANSISTOR	
Q403	DTA114ESTP	TRANSISTOR	
Q404	DTA114ESTP	TRANSISTOR	
Q405-408	2SD2144S	TRANSISTOR	
Q409	2SA1309A-R	TRANSISTOR	
Q501, 502	2SD1450STTA	TRANSISTOR	
Q503	2SA1309A-R	TRANSISTOR	
Q504	2SC3311AQSTA	TRANSISTOR	(EB)
Q505	2SA1309AQSTA	TRANSISTOR	(EB)
Q601	2SC3311A-Q	TRANSISTOR	
Q602	DTC144EKT96	TRANSISTOR	
Q603	2SC3311A-Q	TRANSISTOR	
Q604	DTC144EKT96	TRANSISTOR	
Q605	DTC114ESTP	TRANSISTOR	
Q701	UN4215	TRANSISTOR	
Q702	2SB621A-R	TRANSISTOR	
Q703	2SD1761DEF	TRANSISTOR	
Q704	2SB1187DEF	TRANSISTOR	
Q705	KSD471ACYGTA	TRANSISTOR	
Q1501-1504	2SA1309A-R	TRANSISTOR	
Q1505	DTC114ESTP	TRANSISTOR	

Ref. No.	Part No.	Part Name & Description	Remarks
Q1506	DTA114ESTP	TRANSISTOR	
Q1551, 1552	2SC3312RSTA	TRANSISTOR	
		DIODE(S)	
D501, 502	MA167TA	DIODE	(EB)
D504	MA4051MTA	DIODE	(EB)
D601, 602	MA700	DIODE	
D603	MA4047MTA	DIODE	
D605-608	MA165	DIODE	
D612, 613	MA165	DIODE	
D615	1SS291TA	DIODE	
D617, 618	MA165	DIODE	
D620, 621	MA165	DIODE	
D655-660	LN873RP-C	LED	
D662	LN873RP-C	LED	
D667, 668	LN873RP-C	LED	
D701, 702	MA4150M	DIODE	
D703	MA165	DIODE	
D704, 705	MA167	DIODE	
D706	MA4062-H	DIODE	
D707-710⚠	P300DLF	DIODE	
D713	MA4240H	DIODE	
D1501, 1502	MA4082MTA	DIODE	
		VARIABLE RESISTOR(S)	
VR401	EWHFDAF20G15	V. R	
VR601	EVQWQAF2524B	V. R	
VR1301, 302	EWC2XAF20C15	V. R	
		COIL(S)	
L501, 502	SLQY07G-40	COIL	
L601	ELEXT100KA9	COIL	
L602, 603	RLQZP101KT-Y	COIL	
		TRANSFORMER	
T1 ⚠	RTP1M5E008-V	POWER TRANSFORMER	(E, EG)
T1 ⚠	RTP1M5B002-V	POWER TRANSFORMER	(EB, GN)
T1 ⚠	RTP1M5G002-V	POWER TRANSFORMER	(GC)
		OSCILLATOR(S)	
X601	EFOGC6004T4	CERAMIC FILTER	

Ref. No.	Part No.	Part Name & Description	Remarks
		DISPLAY TUBE	
FL601	RSL0074-F	DISPLAY TUBE	
		FUSE(S)	
F1 ⚠	XBA2C08TB0	FUSE	
F1 ⚠	XBA2C16TB0	FUSE	(GC)
F2 ⚠	XBA2C08TB0	FUSE	(E, EB, EG)
		SWITCH(ES)	
S501	RSS2B006-M	SW, ACTIVE CURRENT SENSOR	
S601	EVQ21405R	SW, SPEAKER ON/OFF	
S602	EVQ21405R	SW, TUNER	
S603	EVQ21405R	SW, AUX 2	
S604	EVQ21405R	SW, TAPE	
S605	EVQ21405R	SW, AUX 1	
S607	EVQ21405R	SW, CD	
S610	EVQ21405R	SW, VOLUME PRESET	
S611	EVQ21405R	SW, SUPER BASS	
S614	EVQ21405R	SW, SURROUND	
S701 ⚠	ESB8249V	SW, POWER	
S702 ⚠	ESE37263	SW, VOLTAGE SELECTOR	(GC)
		CONNECTOR	
J201A	RJU060G07T	SOCKET	
J202A	RJU060G07T	SOCKET	
J203A	RJU060G07T	SOCKET	
J204A	RJU060G07T	SOCKET	
J207A	RJU060G05T	SOCKET	
J208A	RJU060G05T	SOCKET	
J209A	RJU060G05T	SOCKET	
J501A	RJS1A1705	CONNECTOR(5P)	
J551	SJT3213	CONNECTOR	(EB)
J601A	RJU003K010M1	SOCKET(10P)	
J602A	RJU003K010M1	SOCKET(10P)	
J603A	RJU003K008M1	SOCKET(8P)	
J631A	SJT30549BB1	CONNECTOR	
J632A	SJT30549BB1	CONNECTOR	
J633A	SJT30549BB1	CONNECTOR	
J701A	RJS1A1704	SOCKET(4P)	
J201B	RJT060B07	CONNECTOR	
J202B	RJT060B07	CONNECTOR	
J203B	RJT060B07	CONNECTOR	
J204B	RJT060B07	CONNECTOR	
J207B	RJT060B05	CONNECTOR	
J208B	RJT060B05	CONNECTOR	
J209B	RJT060B05	CONNECTOR	
J601B	RJT003K010M1	CONNECTOR(10P)	
J602B	RJT003K010M1	CONNECTOR(10P)	

Ref. No.	Part No.	Part Name & Description	Remarks
J603B	RJT003K008M1	CONNECTOR(8P)	
J631B	SJS50581BB	SOCKET(5P)	
J632B	SJS50581BB	SOCKET(5P)	
J633B	SJS50581BB	SOCKET(5P)	
J701B	RJS1A1704	SOCKET(4P)	
		JACK(S)	
JK201	SJF3068N	TERMINAL, PHONO	
JK202	SJF3069-5N	TERMINAL, TAPE	
JK203	SJF3069N	TERMINAL, TUNER/CD	
JK205	SJF3069-5N	TERMINAL, AUX 1/2	
JK206	SJF3069N	TERMINAL, EXT OUT/IN	
JK501	RJR0054M	TERMINZL, SPEAKER	
JK502	SJF3068-4N	TERMINAL, SURROUND	
JK504	SJJ145A-1	JACK, HEADPHONES	
JK601	RJJ33T01	SYNCHRO, SYSTEM CONT. IN	
JK602	RJJ33T01	SYNCHRO, SYSTEM CONT. OUT	
JK603	RJJ33T01	SYNCHRO, CONTROL TO TURNTABL	
JK701	RJS1A0203-0	CONNECTOR, TAPE	
JK901 ⚠	SJS9231-1B	AC INLET	(E, EB, EG, GC)
JK901 ⚠	SJS9234B	AC INLET	(GN)
JK902 ⚠	SJS9333B	AC OUTLET	(E, EG)
JK902 ⚠	SJS9332B	AC OUTLET	(EB)
JK902 ⚠	SJS9233B	AC OUTLET	(GC)
		FUSE HOLDER	
FC1, 2 ⚠	SJT388	FUSE HOLDER	
FC3, 4 ⚠	SJT388	FUSE HOLDER	(E, EB, EG, GC)

Notes : * Capacity valuse are in microfarads (uF) unless specified otherwise, P=Pico-farads(pF) F=Farads(F)
* Resistance values are in ohms, unless specified otherwise, 1K=1,000(OHM) , 1M=1,000k(OHM)

Ref. No.	Part No.	Values & Remarks
		RESISTORS
R107, 108	ERDS2TJ471	1/4W 470
R109, 110	ERDS2TJ473	1/4W 47K
R111, 112	ERDS2TJ331	1/4W 330
R113, 114	ERDS2TJ560T	1/4W 56
R115, 116	ERDS2TJ184T	1/4W 180K
R117, 118	ERDS2TJ123	1/4W 12K
R119, 120	ERDS2TJ224T	1/4W 220K
R121, 122	ERDS2TJ102	1/4W 1K
R123, 124	ERDS2TJ471	1/4W 470
R201, 202	ERDS2TJ472	1/4W 4.7K
R203-206	ERDS2TJ102	1/4W 1K
R207-210	ERDS2TJ822	1/4W 8.2K
R213, 214	ERDS2TJ822	1/4W 8.2K
R215-218	ERDS2TJ102	1/4W 1K
R232, 233	ERDS2TJ272T	1/4W 2.7K
R249	ERDS2TJ103	1/4W 10K
R250	ERDS2TJ223	1/4W 22K
R251, 252	ERDS2TJ473	1/4W 47K
R253, 254	ERDS2TJ183T	1/4W 18K
R255, 256	ERDS2TJ153	1/4W 15K
R257, 258	ERDS2TJ473	1/4W 47K
R271, 272	ERDS2TJ152	1/4W 1.5K
R297, 298	ERDS2TJ182	1/4W 1.8K
R301-304	ERDS2TJ223	1/4W 22K
R305, 306	ERDS2TJ224T	1/4W 220K
R307, 308	ERDS2TJ332	1/4W 3.3K
R309, 310	ERDS2TJ223	1/4W 22K
R311, 312	ERDS2TJ393	1/4W 39K
R313-315	ERDS2TJ223	1/4W 22K
R316	ERDS2TJ622T	1/4W 6.2K
R317	ERDS2TJ562	1/4W 5.6K
R318	ERDS2TJ123	1/4W 12K
R319	ERDS2TJ224T	1/4W 220K
R321, 322	ERDS2TJ332	1/4W 3.3K
R324	ERDS2TJ332	1/4W 3.3K
R325, 326	ERDS2TJ392T	1/4W 3.9K
R327, 328	ERDS2TJ104	1/4W 100K
R329	ERDS2TJ332	1/4W 3.3K
R331	ERDS2TJ105T	1/4W 1M
R332	ERDS2TJ334	1/4W 330K
R401, 402	ERDS2TJ823T	1/4W 82K
R403, 404	ERDS2TJ683	1/4W 68K
R405, 406	ERDS2TJ393	1/4W 39K
R407, 408	ERDS2TJ333	1/4W 33K
R409, 410	ERDS2TJ103	1/4W 10K
R411, 412	ERDS2TJ332	1/4W 3.3K

Ref. No.	Part No.	Values & Remarks
R413, 414	ERDS2TJ153	1/4W 15K
R415, 416	ERDS2TJ222	1/4W 2.2K
R417, 418	ERDS2TJ221	1/4W 220
R419, 420	ERDS2TJ273	1/4W 27K
R421, 422	ERDS2TJ470	1/4W 47
R423, 424	ERDS2TJ153	1/4W 15K
R425-428	ERDS2TJ152	1/4W 1.5K
R429, 430	ERDS2TJ333	1/4W 33K
R431, 432	ERDS2TJ102	1/4W 1K
R433	ERDS2TJ105T	1/4W 1M
R434	ERDS2TJ334	1/4W 330K
R435, 436	ERDS2TJ102	1/4W 1K
R437	ERDS2TJ105T	1/4W 1M
R438	ERDS2TJ334	1/4W 330K
R439, 440	ERDS2TJ152	1/4W 1.5K
R441, 442	ERDS2TJ222	1/4W 2.2K
R443, 444	ERDS2TJ102	1/4W 1K
R445	ERDS2TJ222	1/4W 2.2K
R446	ERDS2TJ104	1/4W 100K
R447	ERDS2TJ334	1/4W 330K
R448	ERDS2TJ105T	1/4W 1M
R449	ERDS2TJ332	1/4W 3.3K
R450	ERDS2TJ103	1/4W 10K
R471-474	ERDS2TJ334	1/4W 330K
R477, 478	ERDS2TJ102	1/4W 1K
R500	ERDS2TJ100	1/4W 10
R501	ERDS2TJ104	1/4W 100K
R502	ERDS2TJ105T	1/4W 1M
R507, 508	ERDS2TJ222	1/4W 2.2K
R509, 510	ERDS2TJ563	1/4W 56K
R511, 512	ERDS2TJ182	1/4W 1.8K
R513, 514	ERDS2TJ563	1/4W 56K
R515, 516	ERDS2TJ223T	1/4W 22K (EB)
R517	ERDS2TJ563T	1/4W 56K (EB)
R518	ERDS2TJ684	1/4W 680K
R519	ERDS2TJ154	1/4W 150K
R520	ERDS2TJ153T	1/4W 15K (EB)
R521	ERDS2TJ103T	1/4W 10K (EB)
R522	ERDS1FVJ680T	1/2W 68 (EB) ⚠
R524	ERDS2TJ105T	1/4W 1M
R525, 526	ERD25FVJ100T	1/4W 10 ⚠
R527, 528	ERDS1FVJ100T	1/2W 10 ⚠
R531, 532	ERG2SJ331P	2W 330
R533, 534	ERDS2TJ562	1/4W 5.6K
R535-538	ERDS2TJ472	1/4W 4.7K
R539	ERDS2TJ102	1/4W 1K
R540	ERDS2TJ334	1/4W 330K
R542	ERDS2TJ103	1/4W 10K
R543	ERDS1FVJ560T	1/2W 56 (EB) ⚠

Ref. No.	Part No.	Values & Remarks
R550	ERDS2TJ102	1/4W 1K
R551	ERDS2TJ104	1/4W 100K
R554	ERD25FJ470	1/4W 47 ⚠
R601	ERDS2TJ223	1/4W 22K
R602-604	ERDS2TJ393	1/4W 39K
R605	ERDS2TJ223	1/4W 22K
R606-608	ERDS2TJ393	1/4W 39K
R609-612	ERDS2TJ100	1/4W 10
R613	ERDS2TJ120T	1/4W 12
R614	ERDS2TJ150T	1/4W 15
R615, 616	ERDS2TJ151	1/4W 150
R617-620	ERDS2TJ104	1/4W 100K
R621, 622	ERDS2TJ103	1/4W 10K
R623	ERDS2TJ222	1/4W 2.2K
R624	ERDS2TJ332	1/4W 3.3K
R625	ERDS2TJ103	1/4W 10K
R626	ERDS2TJ332	1/4W 3.3K
R627	ERDS2TJ222	1/4W 2.2K
R628	ERDS2TJ332	1/4W 3.3K
R629	ERDS2TJ103	1/4W 10K
R630	ERDS2TJ102	1/4W 1K
R631	ERDS2TJ103	1/4W 10K
R632	ERDS2TJ222	1/4W 2.2K
R633	ERDS2TJ103	1/4W 10K
R634	ERDS2TJ822	1/4W 8.2K
R635	ERDS2TJ393	1/4W 39K
R636	ERDS2TJ332	1/4W 3.3K
R637	ERDS2TJ103	1/4W 10K
R638	ERDS2TJ104	1/4W 100K
R639	ERDS2TJ105T	1/4W 1M
R640	ERDS2TJ102	1/4W 1K
R641	ERDS2TJ223	1/4W 22K
R642	ERDS2TJ103	1/4W 10K
R643	ERDS2TJ105T	1/4W 1M
R646	ERDS2TJ223	1/4W 22K
R653-655	ERDS2TJ331	1/4W 330
R659	ERDS2TJ272T	1/4W 2.7K
R661	ERDS2TJ331	1/4W 330
R662	ERDS2TJ101	1/4W 100
R697-699	ERDS2TJ101	1/4W 100
R701, 702	ERDS1FVJ332T	1/2W 3.3K ⚠
R703	ERD25FJ101	1/4W 100 ⚠
R704	ERDS2TJ473	1/4W 47K
R705	ERDS2TJ103	1/4W 10K
R706	ERDS1FVJ2R2T	1/2W 2.2 ⚠
R707	ERDS1FVJ3R3T	1/2W 3.3 ⚠
R709	ERDS2TJ332	1/4W 3.3K
R710	ERDS1FVJ331T	1/2W 330 ⚠
R711	ERDS2TJ102	1/4W 1K

Ref. No.	Part No.	Values & Remarks
R713	ERDS2TJ2R2T	1/4W 2.2
R718	ERDS1FVJ820T	1/2W 82 ⚠
R727	ERDS2TJ104	1/4W 100K
R1301, 1302	ERDS2TJ102	1/4W 1K
R1303, 1304	ERDS2TJ822	1/4W 8.2K
R1305, 1306	ERDS2TJ223	1/4W 22K
R1307, 1308	ERDS2TJ392T	1/4W 3.9K
R1309, 1310	ERDS2TJ182	1/4W 1.8K
R1311, 1312	ERDS2TJ821	1/4W 820
R1313, 1314	ERDS2TJ333	1/4W 33K
R1501, 1502	ERDS2TJ123	1/4W 12K
R1503, 1504	ERDS2TJ103	1/4W 10K
R1505, 1506	ERDS2TJ101	1/4W 100
R1507, 1508	RREEMKR10VC	2W 0.1
R1509-1512	ERDS2TJ103	1/4W 10K
R1513-1516	ERDS2TJ104	1/4W 100K
R1517, 1518	ERDS2TJ472	1/4W 4.7K
R1519, 1520	ERDS2TJ272T	1/4W 2.7K
R1521-1526	ERDS2TJ563	1/4W 56K
R1527, 1528	ERDS2TJ103	1/4W 10K
R1529, 1530	ERDS2TJ392T	1/4W 3.9K
R1531, 1532	ERDS2TJ223	1/4W 22K
R1533, 1534	ERDS2TJ472	1/4W 4.7K
R1535, 1536	ERDS2TJ223	1/4W 22K
R1537, 1538	ERDS2TJ103	1/4W 10K
R1539	ERDS2TJ333	1/4W 33K
R1540	ERDS2TJ102	1/4W 1K
R1541, 1542	ERDS2TJ752T	1/4W 7.5K
R1551, 1552	ERDS2TJ223	1/4W 22K
R1553, 1554	ERDS2TJ103	1/4W 10K
R1555, 1556	ERDS2TJ562	1/4W 5.6K
R1557, 1558	ERDS2TJ103	1/4W 10K
R1559, 1560	ERDS2TJ273	1/4W 27K
R1561-1564	ERDS2TJ102	1/4W 1K
R1565, 1566	ERDS2TJ123	1/4W 12K
R1567, 1568	ERDS2TJ683	1/4W 68K
		CAPACITORS
C107, 108	ECBT1H101KB5	50V 100P
C109, 110	ECBT1H102KB5	50V 1000P
C111, 112	ECA1EAP330B	25V 33P
C115, 116	ECFR1E223KR	25V 0.022U
C117, 118	ECFR1E682KR	25V 6800P
C119, 120	ECA1HAP010B	50V 1U
C121, 122	ECBT1E103ZF	25V 0.01U
C200	ECBT1E223ZF	25V 0.022U
C201	ECBT1H470J5	50V 47P
C203, 204	ECBT1E103ZF	25V 0.01U
C205, 206	ECBT1H180J5	50V 18P
C207, 208	ECBT1H151KB5	50V 150P
C209-216	ECBT1H101KB5	50V 100P

Ref. No.	Part No.	Values & Remarks
C221-226	ECBT1H101KB5	50V 100P
C229, 230	ECBT1H101KB5	50V 100P
C231, 232	ECBT1E103ZF	25V 0.01U
C250	ECEA1CKA220B	16V 22U
C251, 252	ECEA1HKA3R3B	50V 3.3U
C253, 254	ECEA1HKAR47B	50V 0.47U
C255, 256	ECBT1H180J5	50V 18P
C258	ECBT1E223ZF	25V 0.022U
C271, 272	ECBT1H101KB5	50V 100P
C273, 274	ECEA1CKA220B	16V 22U
C297, 298	ECBT1H151KB5	50V 150P
C301, 302	ECA1HAP3R3B	50V 3.3U
C303	ECBT1H680J5	50V 68P
C304	ECQV1H823JZ	50V 0.082U
C305	ECEA1HKA3R3B	50V 3.3U
C306	ECBT1H221KB5	50V 220P
C307	ECEA1HKA3R3B	50V 3.3U
C309, 310	ECBT1H820KB5	50V 82P
C311, 312	ECA1HAP3R3B	50V 3.3U
C313, 314	ECBT1E103ZF	25V 0.01U
C395, 396	ECBT1H120J5	50V 12P
C398, 399	ECBT1E103ZF	25V 0.01U
C411, 412	ECFR1E123KR	25V 0.012U
C413, 414	ECEA1HKAR22B	50V 0.22U
C415, 416	ECFR1E682KR	25V 6800P
C417, 418	ECFR1E272KR	25V 2700P
C419, 420	ECFR1E333KR	25V 0.033U
C421, 422	ECEA1HKA3R3B	50V 3.3U
C423, 424	ECA1HAP100B	50V 10U
C427	ECEA0JKA470B	6.3V 47U
C432	ECEA1CKA100B	16V 10U
C433, 434	ECBT1E103ZF	25V 0.01U
C451, 452	ECEA1CKA220B	16V 22U
C471, 472	ECA1HAP3R3B	50V 3.3U
C473, 474	ECBT1H101KB5	50V 100P
C475, 476	ECBT1H821KB5	50V 820P
C477, 478	ECBT1H680J5	50V 68P
C479, 480	ECEA1HKA3R3B	50V 3.3U
C483, 484	ECBT1E103ZF	25V 0.01U
C501, 502	ECBT1H331KB5	50V 330P
C503, 504	ECBT1H151KB5	50V 150P
C505, 506	ECA1HAP2R2B	50V 2.2U
C507, 508	ECBT1H6R8K5	50V 6.8P
C509, 510	ECKT1H223ZF	50V 0.022U
C513	ECEA1CKA100B	16V 10U (EB)
C514	ECEA0JKA470B	6.3V 47U
C516-518	ECBT1E103ZF	25V 0.01U
C519	ECA1HAP330B	55V 33U
C520	ECA2AAP100B	100V 10U
C523, 524	ECA1HAP3R3B	50V 3.3U
C525, 526	ECBT1H331KB5	50V 330P
C535, 536	ECBT1E223ZF	25V 0.022U

Ref. No.	Part No.	Values & Remarks
C537, 538	ECBT1H102KB5	50V 1000P
C543, 544	ECBT1H102KB5	50V 1000P
C597, 598	ECBT1H102KB5	50V 1000P
C601	ECBT1E103ZF	25V 0.01U
C602	ECEA0JU102	6.3V 1000U
C603	ECEA1HKA3R3B	50V 3.3U
C604	ECEA1VKA100B	35V 10U
C605	ECBT1E103ZF	25V 0.01U
C606, 607	ECEA1HKA010B	50V 1U
C608	ECBT1H101KB5	50V 100P
C651	ECBT1H104ZF5	50V 0.1U
C653	ECBT1H470J5	50V 47P
C700	ECKWNS103ZV	500V 0.01U ⚠
C701	ECBT1H102KB5	50V 1000P
C702	ECKR1H103ZF5	50V 0.01U
C703, 704	ECEA1EKA100B	25V 10U
C705, 706	ECEA1CKA100B	16V 10U
C707	ECBT1E103ZF	25V 0.01U
C708	ECEA1CKA100B	16V 100U
C709	ECEA1HKA2R2B	50V 2.2U
C710	ECBT1E223ZF	25V 0.022U
C711, 712	ECEA1HU332UB	50V 3300U
C713	ECQE1104KF3	100V 0.1U
C715	ECEA1VKA100B	35V 10U
C731	ECFR1E104ZF5	25V 0.1U
C1301, 1302	ECFR1E123KR	25V 0.012U
C1303, 1304	ECFR1E683KR	25V 0.068U
C1305, 1306	ECFR1E472KR	25V 4700P
C1307, 1308	ECFR1E223KR	25V 0.022U
C1309, 1310	ECA1HAP010B	50V 1U
C1501-1504	ECEA1HKA2R2B	50V 2.2U
C1505, 1506	ECFR1E223KR	25V 0.022U
C1507, 1508	ECBT1H820KB5	50V 82P
C1509-1512	ECFR1E104KR	25V 0.1U
C1513, 1514	ECBT1H331KB5	50V 330P
C1515, 1516	ECBT1C103MS5	16V 0.01U
C1517, 1518	ECBT1E103ZF	25V 0.01U
C1521A	ECA1HAP2R2B	50V 2.2U
C1521	ECBT1H102KB5	50V 1000P
C1522A	ECA1HAP2R2B	50V 2.2U
C1522	ECBT1H102KB5	50V 1000P
C1551, 1552	ECA1HAP3R3B	50V 3.3U
C1553, 1554	ECBT1H151KB5	50V 150P
C1555, 1556	ECEA1HKA2R2B	50V 2.2U
C1557, 1558	ECQV1H124JZ3	50V 0.12U
C1559, 1560	ECBT1E103ZF	25V 0.01U

■ CABINET PARTS LOCATION

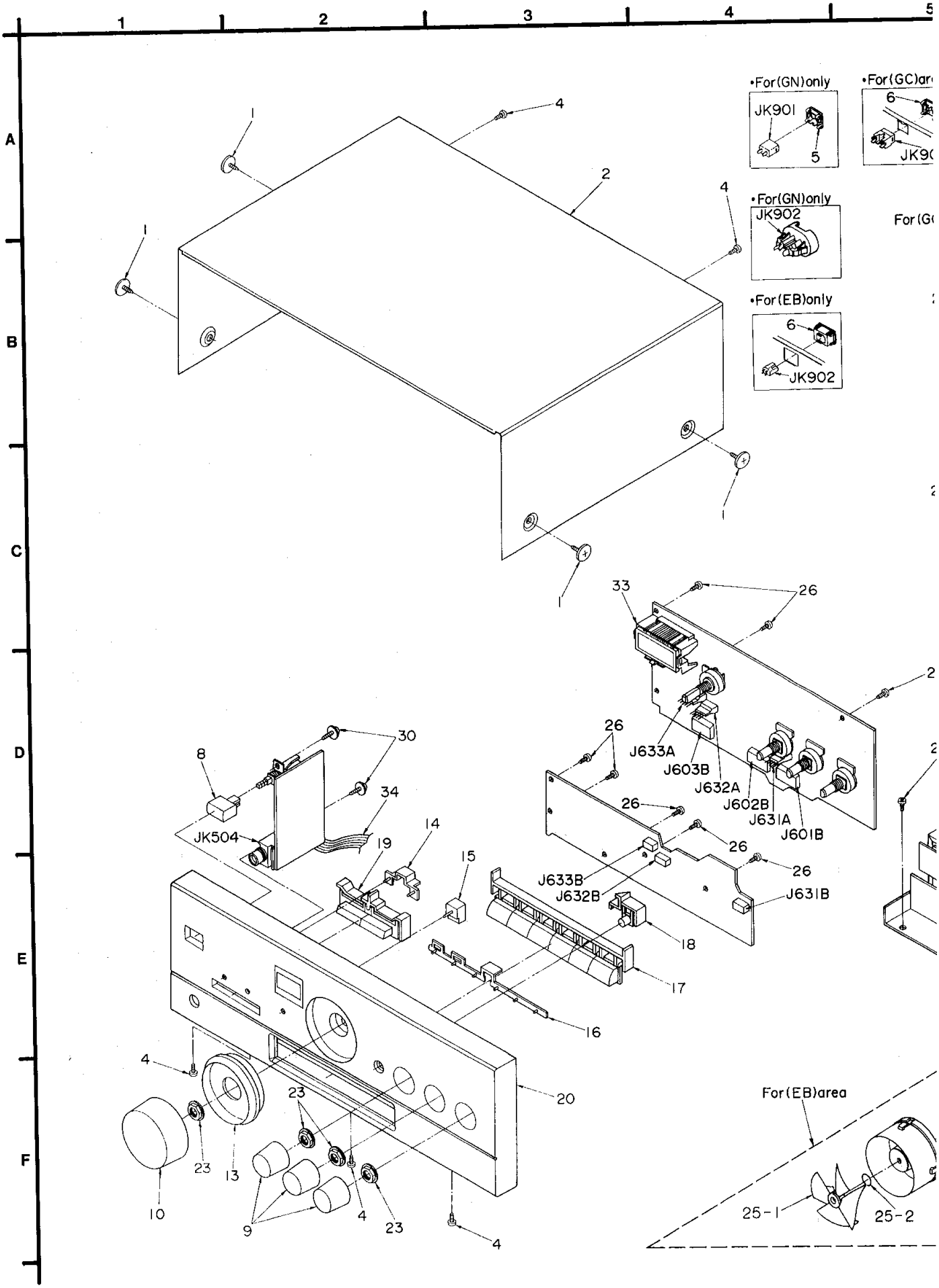

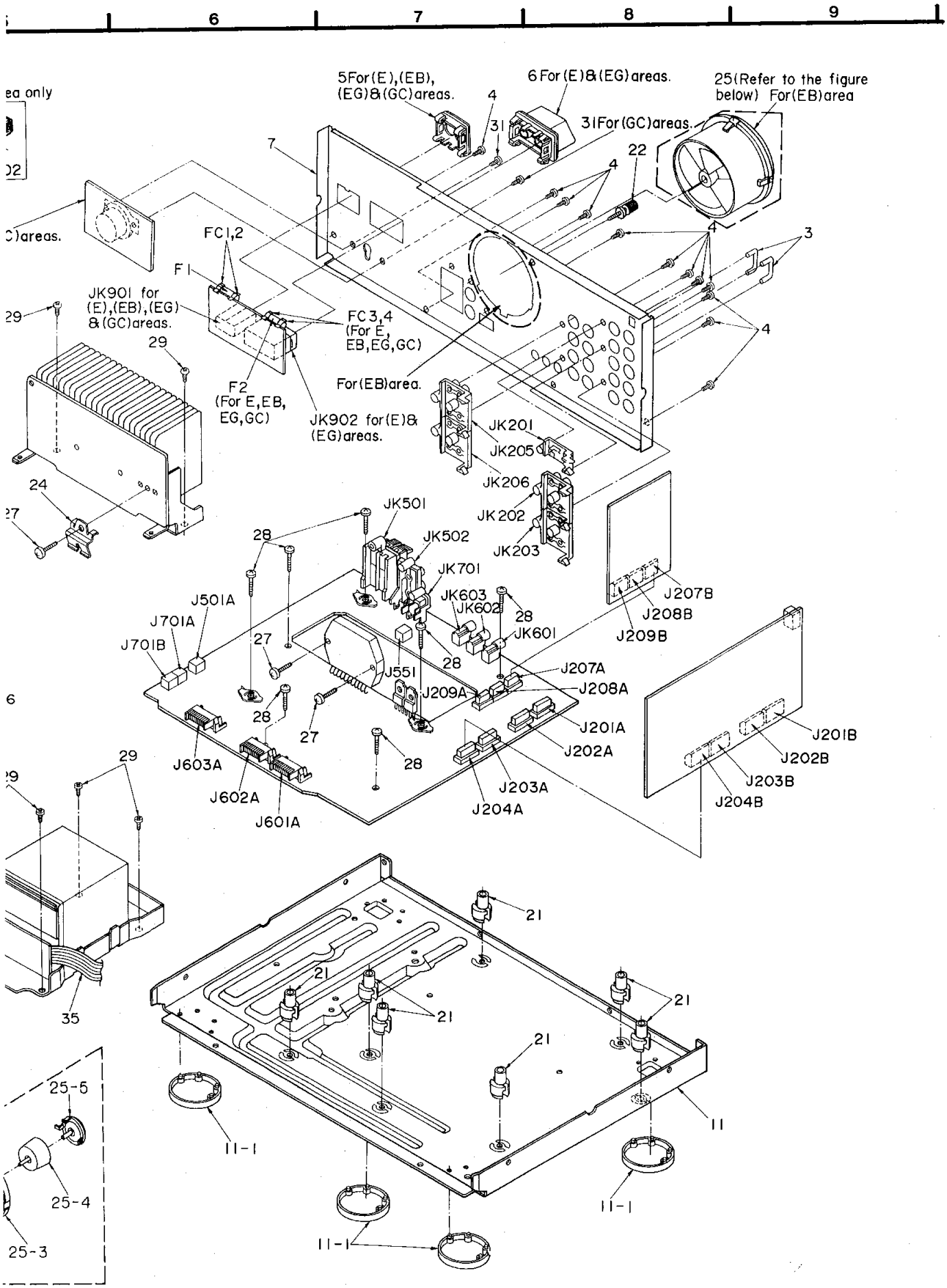
6
7
8
9
5For(E),(EB),
(EG)&(GC)areas.
6For(E)&(EG)areas.
25(Refer to the figure
below) For(EB)area
31For(GC)areas.
FC1,2
F1
JK901 for
(E),(EB),(EG)
&(GC)areas.
FC3,4
(For E,
EB,EG,GC)
For(EB)area.
F2
(For E,EB,
EG,GC)
JK902 for(E)&
(EG)areas.
JK201
JK205
JK206
JK202
JK203
JK501
JK502
JK701
JK603
JK602
JK601
J501A
J701A
J701B
J551
J209A
J207A
J208A
J201A
J202A
J203A
J204A
J603A
J602A
J601A
J207B
J208B
J209B
J201B
J202B
J203B
J204B
25-5
25-4
25-3

Ref. No.	Part No.	Part Name & Description	Remarks
		CABINET PARTS	
1	RHD30007	SCREW	
2	RKM0024A-2K	CABINET	
3	SJP9205-2Y	SHORTING PIN	
4	XTBS3+8JFZ1	SCREW	
5	SJS9234A	AC INLET COVER	(GN)
5	SJS9231A	AC INLET COVER	(E, EB, EG, GC)
6	SJS9332A	AC OUTLET COVER	(EB)
6	SJS9233A	AC OUTLET COVER	(GC)
6	RJS1A4602	AC OUTLET COVER	(GN)
6	SJS9333A	AC OUTLET COVER	(E, EG)
7	RGR0105F-B1	REAR PANEL	(EB)
7	RGR0105K-B1	REAR PANEL	(EG)
7	RGR0105L-1	REAR PANEL	(GC)
7	RGR0105M-1	REAR PANEL	(GN)
7	RGR0105K-A1	REAR PANEL	(E)
8	RGU0030	POWER BUTTON	
9	RGW0072	KNOB, TONE	
10	RGW0076-1	KNOB, MAIN VOL	
11	RFKJUX502E-K	CHASSIS ASS'Y	
11-1	RKA0011-2	FOOT	
13	RGK0315A-K	ORNAMENT	
14	RGL0132-C	PANEL LIGHT	
15	RGL0133-C	PANEL LIGHT	
16	RGL0137-C	PANEL LIGHT	
17	RGU0470B-K	BUTTON, SELECT	
18	RGU0471-K1	BUTTON, VOL PRESET	
19	RGU0591A-K	BUTTON, SUPER BASS	
20	RFKGUX102E	FRONT PANEL ASS'Y	
21	SHE187-2	HOLDER	
22	SNE2123	GND SCREW	
23	SNE4021-1	NUT	
24	SUS894-1	ANGLE	
25	SYE1128-2	FAN ASS'Y	(EB)
25-1	SHE232	FAN	(EB)
25-2	SUS271	SPRING	(EB)
25-3	SHE233	FAN CASE	(EB)
25-4	MDN-4RB4MRC	MOTOR	(EB)
25-5	SHE234	CAP	(EB)
26	XTBS26+8J	SCREW	
27	XTB3+16JFZ	SCREW	
28	XTB3+20JFZ	SCREW	
29	XTB3+8JFZ	SCREW	
30	XTWS3+8T	SCREW	
31	XYN3+C6FZ	SCREW	(GC)
33	RMN0102	FL HOLDER	
34	RWJ1805130KQ	FLAT CABLE	
35	RWJ1808110KQ	FLAT CABLE	

Ref. No.	Part No.	Part Name & Description	Remarks
		PACKING MATERIAL	
P1	RPG0838	PACKING CASE	
P2	RPN0412	PAD ASS'Y	
P3	SPSD152	ACCESSORY BOX	
P4	XZB60X65A01Z	PROTECTION COVER	
		ACCESSORIES	
A1	RQF1081	INSTRUCTION MANUAL ASS'Y	(E)
A1	RQF1082	INSTRUCTION MANUAL ASS'Y	(EB)
A1	RQF1083	INSTRUCTION MANUAL ASS'Y	(EG)
A1	RQF1084	INSTRUCTION MANUAL ASS'Y	(GC)
A1	RQF1085	INSTRUCTION MANUAL ASS'Y	(GN)
A1-1	RQA0013	WARRANTY CARD	(E, EG, EB)
A1-1	SQX7186	WARRANTY CARD	(GN)
A1-2	RQCB0169	CERVICENTER LIST	
A1-3	RFKSUX102E-K	INSTRUCTION MANUAL	(E)
A1-3	RQT0988-B	INSTRUCTION MANUAL	(EB, GN)
A1-3	RQT0989-D	INSTRUCTION MANUAL	(EG)
A1-3	RQT0986-G	INSTRUCTION MANUAL	(GC)
A1-4	SPB1061	POLYETHYLENE COVER	
A2 ⚠	SJA187	AC CORD	(E, EG)
A2 ⚠	SJA188	AC CORD	(EB)
A2 ⚠	RJA0004	AC CORD	(GC)
A2 ⚠	SJA173	AC CORD	(GN)
A3 ⚠	SJP9215	AC PLUG ADAPTOR	(GC)

■ PACKAGING

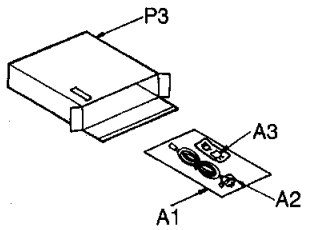

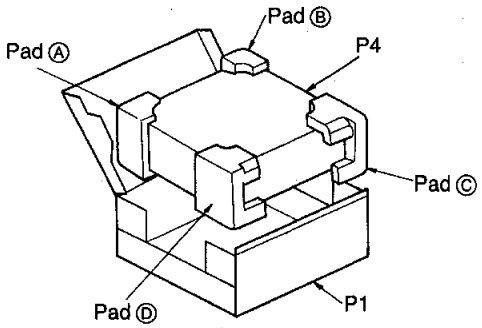

Pad Ⓐ Ⓑ Ⓒ Ⓓ Assembly: RPN0412

Printed in Japan
F910309500HS/KH