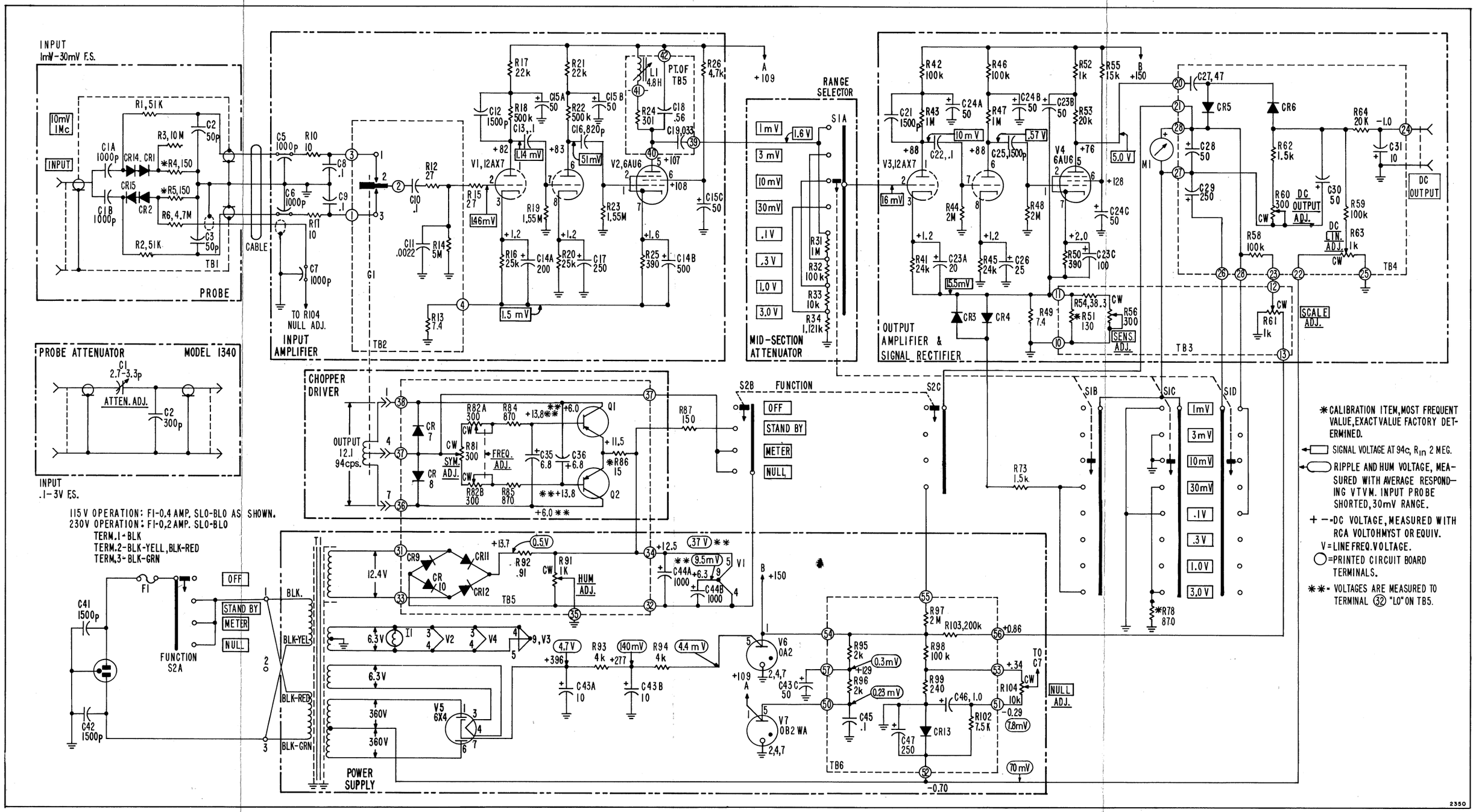

CAPACITORS: NOT MARKED — MICROFARADS (10^{-6}F)
p — PICOFARADS (10^{-12}F)
RESISTORS: NOT MARKED — OHMS (Ω)
k — KILOHMS (10^{3}Ω)
M — MEGOHMS (10^{6}Ω)
VOLTAGES: NOT MARKED — VOLTS (V)
mV — MILLIVOLTS (10^{-3}V)

Fig. 10. Schematic of Model 340 RF Millivoltmeter