OPERATING AND SERVICE MANUAL

VOLTMETER
427A

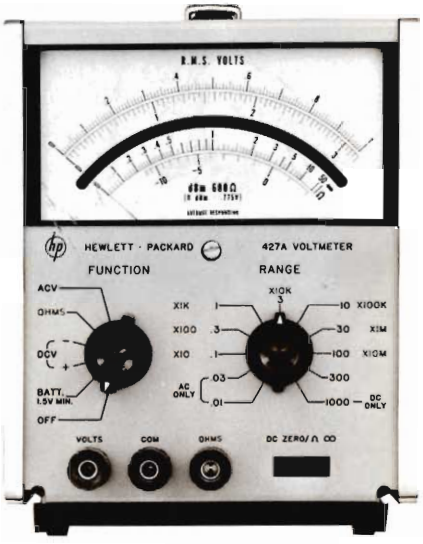

HEWLETT hp PACKARD

Artisan Technology Group - Quality Instrumentation ... Guaranteed | (888) 88-SOURCE | www.artisantg.com

HEWLETT hp PACKARD

CERTIFICATION

The Hewlett-Packard Company certifies that this instrument was thoroughly tested and inspected and found to meet its published specifications when it was shipped from the factory. The Hewlett-Packard Company further certifies that its calibration measurements are traceable to the U.S. National Bureau of Standards to the extent allowed by the Bureau's calibration facility.

WARRANTY AND ASSISTANCE

All Hewlett-Packard products are warranted against defects in materials and workmanship. This warranty applies for one year from the date of delivery, or, in the case of certain major components listed in the operating manual, for the specified period. We will repair or replace products which prove to be defective during the warranty period provided they are returned to Hewlett-Packard. No other warranty is expressed or implied. We are not liable for consequential damages.

Service contracts or customer assistance agreements are available for Hewlett-Packard products that require maintenance and repair on-site.

For any assistance, contact your nearest Hewlett-Packard Sales and Service Office. Addresses are provided at the back of this manual.

Artisan Technology Group - Quality Instrumentation ... Guaranteed | (888) 88-SOURCE | www.artisantg.com

OPERATING AND SERVICE MANUAL

-hp- Part No. 00427-90005

MODEL 427A
VOLTMETER

Serials Prefixed: 947-

Appendix C, Manual Backdating Changes,
adapts manual to serials prefixed 550-, 621-, 731-

Copyright Hewlett-Packard Company 1969
P.O. Box 301, Loveland, Colorado, 80537 U.S.A.

Printed: AUG 1972

Artisan Technology Group - Quality Instrumentation ... Guaranteed | (888) 88-SOURCE | www.artisantg.com

TABLE OF CONTENTS

Section		Page
I	GENERAL INFORMATION	1-1
1-1.	Description	1-1
1-5.	Battery	1-1
1-7.	Instrument and Manual Identification	1-1
1-10.	Available Accessories	1-1
1-12.	Cables and Adapters	1-1
1-13.	Probes	1-1
II	INSTALLATION	2-1
2-1.	Introduction	2-1
2-3.	Initial Inspection	2-1
2-5.	Power Requirements	2-1
2-7.	Grounding Requirements	2-1
2-10.	Installation	2-1
2-12.	Bench Mounting	2-1
2-14.	Rack Mounting	2-1
2-16.	Combination Mounting	2-1
2-18.	Repackaging for Shipment	2-1
III	OPERATING INSTRUCTIONS	3-1
3-1.	Introduction	3-1
3-3.	Front and Rear Panel Description	3-1
3-5.	Operating Instructions	3-1
3-6.	Mechanical Zero Adjustment	3-1
3-8.	Turn-On Procedure	3-1
3-11.	DC Measurements	3-1
3-12.	Resistance Measurements	3-1
3-13.	AC Measurements	3-2
3-16.	DB Measurements	3-2
IV	THEORY OF OPERATION	4-1
4-1.	General	4-1
4-5.	DC Operation	4-1
4-7.	Ohms Operation	4-1
4-9.	AC Operation	4-1
4-12.	Circuit Descriptions	4-2
4-13.	DC Amplifier (A1)	4-2
4-16.	DC Offset (A2)	4-2
4-19.	AC Metering Circuit (A2)	4-3
4-23.	Battery Regulator A1	4-3
V	MAINTENANCE	5-1
5-1.	Introduction	5-1
5-3.	Required Equipment	5-1
5-5.	Performance Checks	5-1
V	MAINTENANCE (Cont'd)	
5-7.	AC Accuracy and Frequency Response Check	5-1
5-14.	Resistance Accuracy Check	5-2
5-16.	DC Accuracy	5-2
5-18.	AC Rejection Check	5-3
5-20.	Input Impedance Check	5-3
5-25.	Adjustment and Calibration Procedures	5-4
5-27.	Cover Removal	5-4
5-30.	Amplifier Balance and Zero Offset Adjustment	5-5
5-31.	Regulator Adjust	5-5
5-32.	AC Calibration	5-5
5-36.	Resistance Infinity Adjustment	5-6
5-38.	DC Calibration	5-6
5-40.	Alternate Performance Checks and Calibration Procedures	5-6
5-42.	AC Circuits	5-6
5-45.	Resistance Circuits	5-6
5-47.	DC Circuits	5-7
5-50.	AC Rejection	5-7
5-52.	Input Impedance Check	5-7
5-54.	Battery Replacement	5-7
5-56.	Troubleshooting	5-7
5-60.	Power Supply	5-8
5-63.	DC Amplifier	5-8
5-67.	AC Metering Circuit	5-8
5-71.	Adjustment of Factory Selected Components	5-8
5-73.	A1R19*	5-8
5-75.	A2C2*	5-9
5-77.	A2R14*	5-9
5-80.	A2R16*	5-9
5-82.	Etched Circuit Board Repair	5-9
VI	CIRCUIT DIAGRAMS	6-1
6-1.	Introduction	6-1
VII	REPLACEABLE PARTS	7-1
7-1.	Introduction	7-1
7-4.	Ordering Information	7-1
7-6.	Non-Listed Parts	7-1
Appendix		
A	CODE LIST OF MANUFACTURERS	
B	SALES AND SERVICE OFFICES	
C	MANUAL BACKDATING CHANGES	

LIST OF TABLES

Number		Page
1-1.	Specifications	1-0
3-1.	Effects of Harmonic Distortion	3-2
3-2.	DB Range Identification	3-2
5-1.	Required Test Equipment	5-0
5-2.	Resistance Accuracy Check	5-2
5-3.	1% Resistors	5-7
5-4.	Troubleshooting	5-7
5-5.	Power Supply Voltages	5-8
5-6.	AC Metering Circuit Voltages	5-8
7-1.	Replaceable Parts	7-1

Artisan Technology Group - Quality Instrumentation ... Guaranteed | (888) 88-SOURCE | www.artisantg.com

LIST OF ILLUSTRATIONS

Number		Page
1-1.	Model 427A Voltmeter	1-0
1-2.	11096A High Frequency Probe	1-1
3-1.	Location of Front Panel Controls and Indicators	3-0
3-2.	Impedance Correction Graph	3-3
4-1.	Simplified Block Diagram	4-0
4-2.	DC Operation	4-1
4-3.	Ohms Operation	4-2
4-4.	AC Operation	4-2
4-5.	DC Offset Circuit	4-3
5-1.	AC Accuracy and Frequency Response Check	5-0
5-2.	Resistance Accuracy Check	5-2
5-3.	DC Accuracy and Linearity Check	5-2
5-4.	AC Rejection Check	5-3
5-5.	Input Impedance Check	5-4
5-6.	Location of Internal Adjustments	5-5
5-7.	Battery Replacement	5-7
6-1.	Location of Switch Components	6-2
6-2.	Component Location	6-3
6-3.	Schematic Diagram	6-3
7-1.	Location of Mechanical Parts	7-0

Artisan Technology Group - Quality Instrumentation ... Guaranteed | (888) 88-SOURCE | www.artisantg.com

Figure 1-1. Model 427A Voltmeter

Table 1-1. Specifications

DC VOLTMETER

Voltage Ranges: ±100 mV to ±1000 V full scale in a 1, 3, 10 sequence (9 ranges).

Accuracy: ±2% of full scale on any range (0°C to 50°C).

Input Resistance: 10 megohms on all ranges.

AC Rejection: Superimposed peak ac voltages (60 Hz and above) 100 times greater than full scale affects reading less than 1%. Maximum 450 volts peak.

Overload: 1200 Vdc on any range.

AC VOLTMETER

Voltage Ranges: 10 mV to 300 V rms full scale in a 1, 3, 10 sequence (10 ranges).

Frequency Range: 10 Hz to 1 MHz.

Accuracy: (0°C to 50°C).

RANGE	±2% OF FULL SCALE
0.01 V - 30 V	10 Hz - 1 MHz
100 V - 300 V	10 Hz - 100 KHz

Frequency Response:

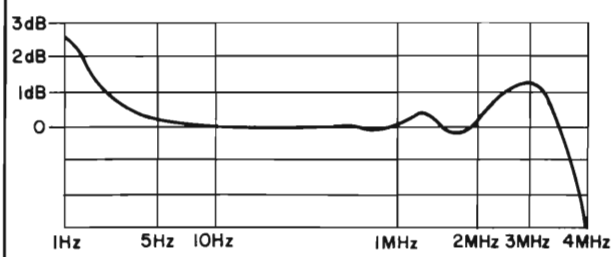

Frequency response 10 mV to 30 V ranges.

AC VOLTMETER (Cont'd)

Input Impedance: 10 megohms shunted by 40 pF on 10 mV to 1 V ranges; 20 pf on 3 V to 300 V ranges.

Response: Responds to the average value of the input; calibrated in rms volts for a sine wave input.

Overload: 300 V/rms momentarily, 1 V range and below.
425 V/rms maximum above 1 V range.

OHMMETER

Resistance Ranges: 10 ohms center scale to 10 megohms center scale (7 ranges).
Accuracy: ±5% of reading at midscale (0°C to +50°C).
Polarity: Common terminal negative.
Source Current:

RANGE	OPEN CIRCUIT VOLTAGE	SHORT CIRCUIT CURRENT
X10	0.1 V	10 mA
X100	0.1 V	1 mA
X1K	1 V	1 mA
X10K	1 V	100 μA
X100K	1 V	10 μA
X1M	1 V	1 μA
X10M	1 V	0.1 μA

GENERAL

Floating Input: May be operated up to 500 Vdc above ground. (Ohms input open in any function except ohms--volts input open when instrument is in off position.)

Power: 22-1/2 volt dry cell battery. (Eveready No. 763 or RCA VS102.)
Option 01: Battery operation and ac line operation (selectable on rear panel). 115 or 230 V ±20%, 50 Hz to 400Hz, 1/2 W.

Artisan Technology Group - Quality Instrumentation ... Guaranteed | (888) 88-SOURCE | www.artisantg.com

SECTION I
GENERAL INFORMATION

1-1. DESCRIPTION.

1-2. The Hewlett-Packard Model 427A is a versatile, compact, self-contained voltmeter. It is capable of making dc measurements from 1 mV to 1000 volts, ac measurements from 0.3 mV to 300 volts at frequencies from 10 Hz to 1 MHz, and resistance measurements from 0.2 ohms to 500 megohms. With the 01 option, the Model 427A may be powered either by a 115 or 230 volt line or by an internal 22-1/2 volt dry cell battery.

1-3. The use of solid state components throughout gives the Model 427A both ruggedness and reliability. Battery operation makes the instrument ideal for field use or isolation from common mode ground loops.

1-4. Figure 1-1 shows the Model 427A, and Table 1-1 contains a list of the Model 427A Specifications.

1-5. BATTERY.

1-6. The battery used in the Model 427A is a 22-1/2 volt dry cell, Eveready No. 763 or an RCA VS102. Typical battery life is more than 300 hours continuous operation or 700 hours intermittent operation.

1-7. INSTRUMENT AND MANUAL IDENTIFICATION.

1-8. Hewlett-Packard uses a two-section serial number. If the first section (serial prefix) of the serial number on your instrument does not agree with those on the title page of this manual, change sheets supplied with the manual will define the differences between your instrument and the Model 427A described in this manual. Some serial numbers may have a letter separating the two sections of the number. This letter indicates the country in which the instrument was manufactured.

1-9. If a letter prefixes the serial number, the instrument was manufactured outside the United States.

1-10. AVAILABLE ACCESSORIES.

1-11. The following accessories are available to increase the test capabilities of the Model 427A.

1-12. CABLES AND ADAPTERS.

- -hp- 11001A 45" test lead, dual banana to BNC male
- -hp- 11002A 5' test lead-dual banana to alligator clips
- -hp- 11003A 5' test lead-dual banana to pencil probe and alligator clip
- -hp- 10111A shielded BNC female to banana plug adapter

1-13. PROBES.

-hp- Model 11074A 10:1 Voltage Divider Probe extends the voltage range of Model 427A by a factor of 10.

-hp- Model 11039A 1000:1 Capacitive Voltage Divider for measuring voltages up to 24 KV.

-hp- Model 11096A High Frequency Probe extends the frequency range of the 427A to 500 MHz. The voltage range is 0.25V to 30V.

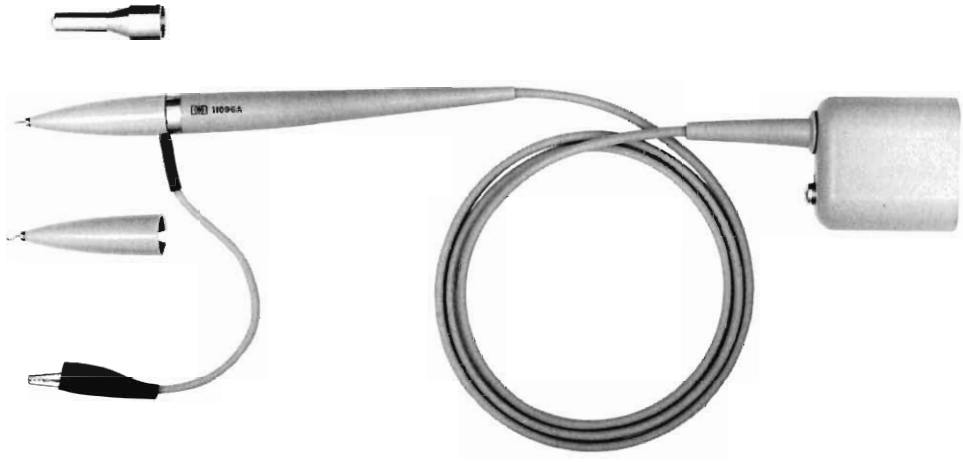

Figure 1-2. 11096A High Frequency Probe

Artisan Technology Group - Quality Instrumentation ... Guaranteed | (888) 88-SOURCE | www.artisantg.com

SECTION II
INSTALLATION

2-1. INTRODUCTION.

2-2. This section contains information and instructions necessary for installation and shipping of Model 427A Voltmeter. Included are initial inspection procedures, power and grounding requirements, installation, and instructions for repackaging for shipment.

2-3. INITIAL INSPECTION.

2-4. This instrument was carefully inspected both mechanically and electrically before shipment. It should be physically free of mars or scratches and in perfect electrical order upon receipt. To confirm this, the instrument should be inspected for physical damage in transit. Also, test the electrical performance of the instrument using the procedure outlined in Paragraph 5-5. If there is damage or deficiency, see the warranty on the inside front cover of this manual.

2-5. POWER REQUIREMENTS.

2-6. The Model 427A uses a 22.5 volt dry cell battery for its primary power source. However, if Option 01 is included, the Model 427A can be operated from any source of 115 or 230 volts (±20%) at 50 to 400 Hz. With the instrument disconnected from the ac power source, move the slide switch (located on the rear panel) until the desired line voltage appears. Power dissipation is less than 1/2 watt maximum.

2-7. GROUNDING REQUIREMENTS.

2-8. To protect operating personnel, the National Electrical Manufacturers' Association (NEMA) recommends that the instrument panel and cabinet be grounded. The Option 01 427A is equipped with a three-conductor power cable which, when plugged into an appropriate receptacle, grounds the instrument. The offset pin on the power cable three-prong connector is the ground wire.

2-9. To preserve the protection feature when operating the instrument from a two-contact outlet, use a three-prong to two-prong adapter and connect the pigtail on the adapter to ground.

2-10. INSTALLATION.

2-11. The Model 427A is fully transistorized; therefore, no special cooling is required. However, the instrument should not be operated where the ambient temperature exceeds +55°C (131°F). For additional information, address inquiries to your local -hp- Sales and Service Office. (See Appendix B for office locations.)

2-12. BENCH MOUNTING.

2-13. Model 427A is shipped with plastic feet and tilt stand in place, ready for use as a bench instrument.

2-14. RACK MOUNTING.

2-15. Model 427A may be rack mounted by using an Adapter Frame (-hp- Part No. 5060-0797). The adapter frame is a rack frame that accepts any combination of submodular units. It can be rack mounted only.

2-16. COMBINATION MOUNTING.

2-17. The Model 427A may be mounted in combination with other submodular units by using a Combining Case (-hp- Model 1051A). If the 427A is equipped with a carrying handle, it will be necessary to remove the top cover on 427A before inserting it into the Combining Case. The Combining Case is a full-module unit which accepts various combinations of submodular units. Being a full-module unit itself, it can be bench or rack mounted and is analogous to any full-module instrument.

2-18. REPACKAGING FOR SHIPMENT.

2-19. The following paragraphs contain a general guide for repackaging of the instrument for shipment. Refer to Paragraph 2-20 if the original container is to be used; 2-21 if it is not.

NOTE

If the instrument is to be shipped to Hewlett-Packard for service or repair, attach a tag to the instrument identifying the owner and indicating the service or repair to be accomplished; include the model number and full serial number of the instrument. In any correspondence, identify the instrument by model number, serial number, and serial number prefix.

2-20. If original container is to be used, proceed as follows:

a. Place instrument in original container. If original container is not available, a suitable container can be purchased from your nearest -hp- Sales and Service Office.

b. Ensure that container is well sealed with strong tape or metal bands.

2-21. If original container is not to be used, proceed as follows:

a. Wrap instrument in heavy paper or plastic before placing in an inner container.

b. Place packing material around all sides of instrument and protect panel face with cardboard strips.

c. Place instrument and inner container in a heavy carton or wooden box and seal with strong tape or metal bands.

d. Mark shipping container with "DELICATE INSTRUMENT," "FRAGILE" etc.

Artisan Technology Group - Quality Instrumentation ... Guaranteed | (888) 88-SOURCE | www.artisantg.com

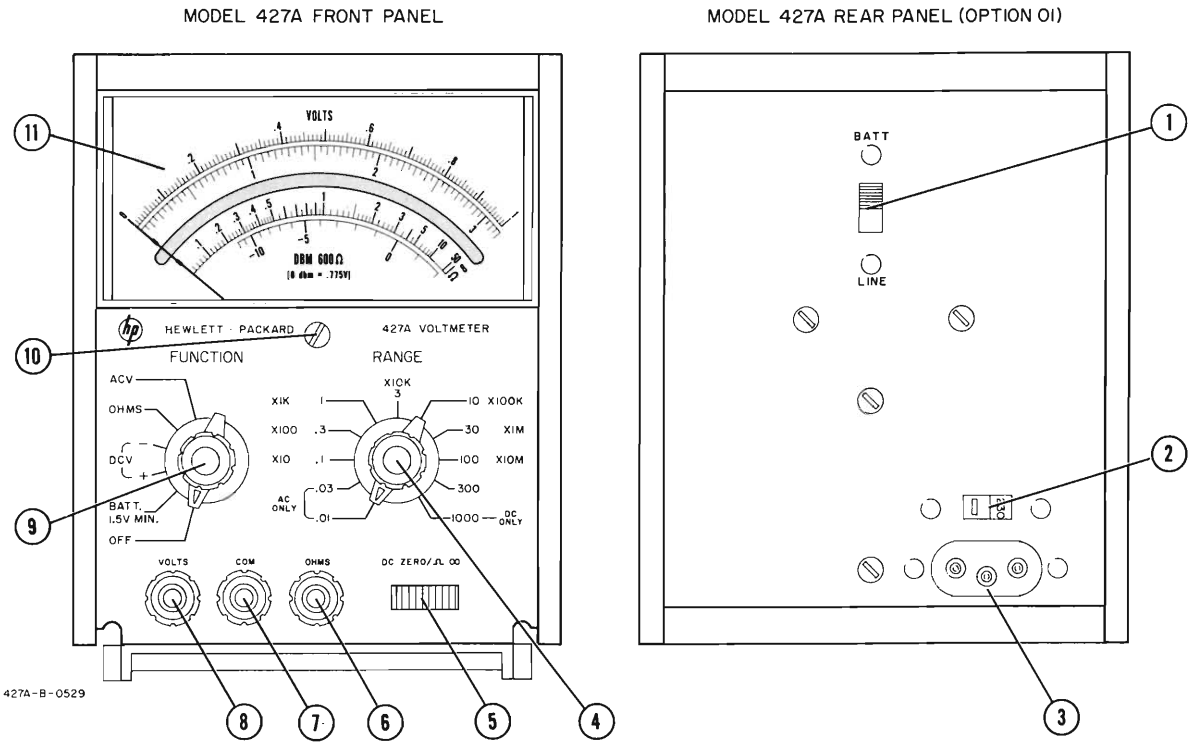

(1) BATT/LINE (option 01 only) slide switch: Selects either battery or line operation.

(2) 115/230 slide switch (option 01 only): Selects either 115 Vac or 230 Vac for line operation.

(3) Line input (option 01 only): Connects ac operating power to instrument.

(4) RANGE switch: Selects appropriate range of unknown input.

(5) DC ZERO/Ω ∞ thumbwheel: Used to electrically zero the instrument in DC mode and to infinity-set the instrument in OHMS mode.

(6) OHMS terminal: Connects unknown resistance to instrument.

(7) COM terminal: Connects to instrument common. (Common input for ACV, OHMS and DCV.)

(8) VOLTS terminal: Applies unknown ac or dc voltage to instrument.

(9) FUNCTION switch: Selects mode of operation. Selections are OFF, BATT, +DC, -DC, OHMS and AC.

(10) Mechanical zero: Mechanically zeroes the meter.

(11) Meter face: Displays the magnitude of unknown resistance or voltage in ohms or volts respectively.

Figure 3-1. Location of Front Panel Controls and Indicators

Artisan Technology Group - Quality Instrumentation ... Guaranteed | (888) 88-SOURCE | www.artisantg.com

SECTION III
OPERATING INSTRUCTIONS

3-1. INTRODUCTION.

3-2. The Model 427A may be operated as a dc voltmeter, ac voltmeter, ohmmeter or dB meter. This section contains operating instructions for each mode of operation.

3-3. FRONT AND REAR PANEL DESCRIPTION.

3-4. Figure 3-1 shows the location of all the Model 427A controls and indicators and explains the function of each. The Option 01 rear panel is shown. The standard rear panel is blank.

3-5. OPERATING INSTRUCTIONS.

NOTE

To obtain maximum battery life, set the FUNCTION switch of OFF when the instrument is not in use.

3-6. MECHANICAL ZERO ADJUSTMENT.

3-7. Before any measurements are made, complete the Mechanical Zero Adjustment in the following steps.

a. Be sure instrument has been off for at least one minute.

b. Rotate Mechanical Zero Adjustment screw CLOCKWISE until meter pointer is to the left of zero and moving upscale toward zero.

c. Continue to rotate adjustment screw clockwise. STOP when needle is exactly on zero. If needle overshoots, repeat step b.

d. When pointer is exactly over zero, rotate adjustment screw slightly COUNTERCLOCKWISE to relieve tension on suspension. If the pointer moves to the left, repeat whole procedure, but make the counterclockwise rotation less.

3-8. TURN-ON PROCEDURE.

3-9. STANDARD INSTRUMENT.

a. Rotate the FUNCTION Switch to BATT/1.5 MIN position.

b. The meter should read 1.5 or higher on the 0-3 scale on any range, indicating that the battery voltage is 15 volts or higher. If the reading is below 1.5, replace the battery according to the steps in Paragraph 5-54.

3-10. OPTION 01 INSTRUMENT.

a. Select either battery or line operation with the rear panel BATT/LINE slide switch. If battery operation is selected, check the battery according to Paragraph 3-9.

b. If line operation is selected, set the 115/230 slide switch to indicate the proper line voltage.

c. Rotate the FUNCTION switch to the desired function. During line operation, the BATT/1.5 MIN check position displays the output of the Option 01 power supply. The reading should be 1.5 or higher on the 0-3 scale on any range, indicating a power supply output of 15 volts or more. This serves as a convenient check of the Option 01 power supply.

3-11. DC MEASUREMENTS.

a. Rotate the FUNCTION switch to +DCV or -DCV depending on the polarity of the input.

b. Short the VOLTS input to the COM input, rotate RANGE to 0.1, and adjust the DC ZERO/Ω∞ thumbwheel for zero meter deflection.

c. Remove shorting connection. If there is a zero offset with COM and VOLTS open, refer to Paragraph 4-16 and Paragraph 5-30.

d. Select approximate range of input with RANGE switch.

CAUTION

DO NOT APPLY MORE THAN 1200 VDC TO ANY DC RANGE.

e. Connect input across VOLTS and COM terminals and read magnitude of input on meter.

3-12. RESISTANCE MEASUREMENTS.

CAUTION

DAMAGE TO 427A INPUT CIRCUIT MAY RESULT IF DC OR AC VOLTAGE IS APPLIED TO OHMS TERMINAL.

a. Rotate the FUNCTION switch to OHMS.

b. Select the approximate range with the RANGE switch; and with the input terminals open, adjust the DC ZERO/Ω∞ thumbwheel for an ∞ indication on the ohms scale. (Pointer should rest on the mark just to the left of ∞).

Artisan Technology Group - Quality Instrumentation ... Guaranteed | (888) 88-SOURCE | www.artisantg.com

c. Connect the unknown resistance across the OHMS and COM terminals. Read the resistance value on the ohms scale.

NOTE

For best accuracy, select an ohms range that will place the meter pointer near the center of the scale.

3-13. AC MEASUREMENTS.

3-14. The Model 427A responds to the average value of the ac input and is calibrated in rms volts for a sine wave input. Since the average value and the rms value of a non-sinusoidal signal are different, any distortion on the input will affect the accuracy of the reading. Table 3-1 shows the effect of harmonic distortion on a reading.

NOTE

The following table is universal in application since these errors are inherent in all average-responding voltmeters. The error shown above may vary with the phase relationship between the harmonic and fundamental.

Table 3-1. Effects of Harmonic Distortion

INPUT VOLTAGE CHARACTERISTICS	TRUE RMS VALUE	METER INDICATION
Fundamental = 100	100	100
Fundamental + 10% second harmonic	100.5	100
Fundamental + 20% second harmonic	102	100 - 102
Fundamental + 50% second harmonic	112	100 - 110
Fundamental + 10% third harmonic	100.5	96 - 104
Fundamental + 20% third harmonic	102	94 - 108
Fundamental + 50% third harmonic	112	90 - 116

3-15. Use the following steps to make an ac measurement.

a. Rotate FUNCTION switch to ACV.

NOTE

With the input shorted, there may be a zero offset of about two minor divisions. This is caused by the bias current through the meter bridge and does not affect the accuracy of ac measurements as the meter moves upscale.

b. Rotate RANGE switch to approximate range of input voltage.

CAUTION

DO NOT APPLY MORE THAN 425V RMS WHEN THE INSTRUMENT IS ON RANGES ABOVE 3, OR MORE THAN 300V RMS ON RANGES BELOW 3.

c. Connect the signal to be measured to the VOLTS and COM terminals and read the magnitude on the voltage scale.

3-16. DB MEASUREMENTS.

a. Making a dB or dBm measurement is essentially the same as making an ac voltage measurement. Follow the steps in Paragraph 3-13, but read the magnitude on the dB scale.

b. The 1 volt position of the RANGE switch is the 0 dBm range. Each position above 1 volt is a 10 dB increase, and each position below 1 volt is a 10 dB decrease. Table 3-2 lists the dB value of each range.

Table 3-2. DB Range Identification

RANGE	DB	RANGE	DB
300	+50	1	0
100	+40	0.3	-10
30	+30	0.1	-20
10	+20	0.03	-30
3	+10	0.01	-40

c. A given dB reading is equal to the algebraic sum of the range and the meter reading. For example, if the meter reading were -6 and the instrument were on the 10 volt (+20 dB) range, the final reading would be 20 dB - 6 dB = 14 dB.

d. The 427A meter is calibrated in dBm. 0 dBm is equivalent to 0.775 volt dropped across a 600Ω load. Consequently, any dBm measurements must be made across a total impedance of 600Ω. Measurements across other impedances will be in dB, not dBm.

e. To convert a dB reading to dBm, use the Impedance Correction Graph (Figure 3-2). For example, to convert a +30 dB reading made across a 50Ω load to dBm, locate the 50Ω load impedance on the bottom of the graph. Follow the impedance line to the heavy black line and read the meter correction at that point. The correction for 50Ω is +10.5 dBm, and the corrected reading is +40.5 dBm.

Artisan Technology Group - Quality Instrumentation ... Guaranteed | (888) 88-SOURCE | www.artisantg.com

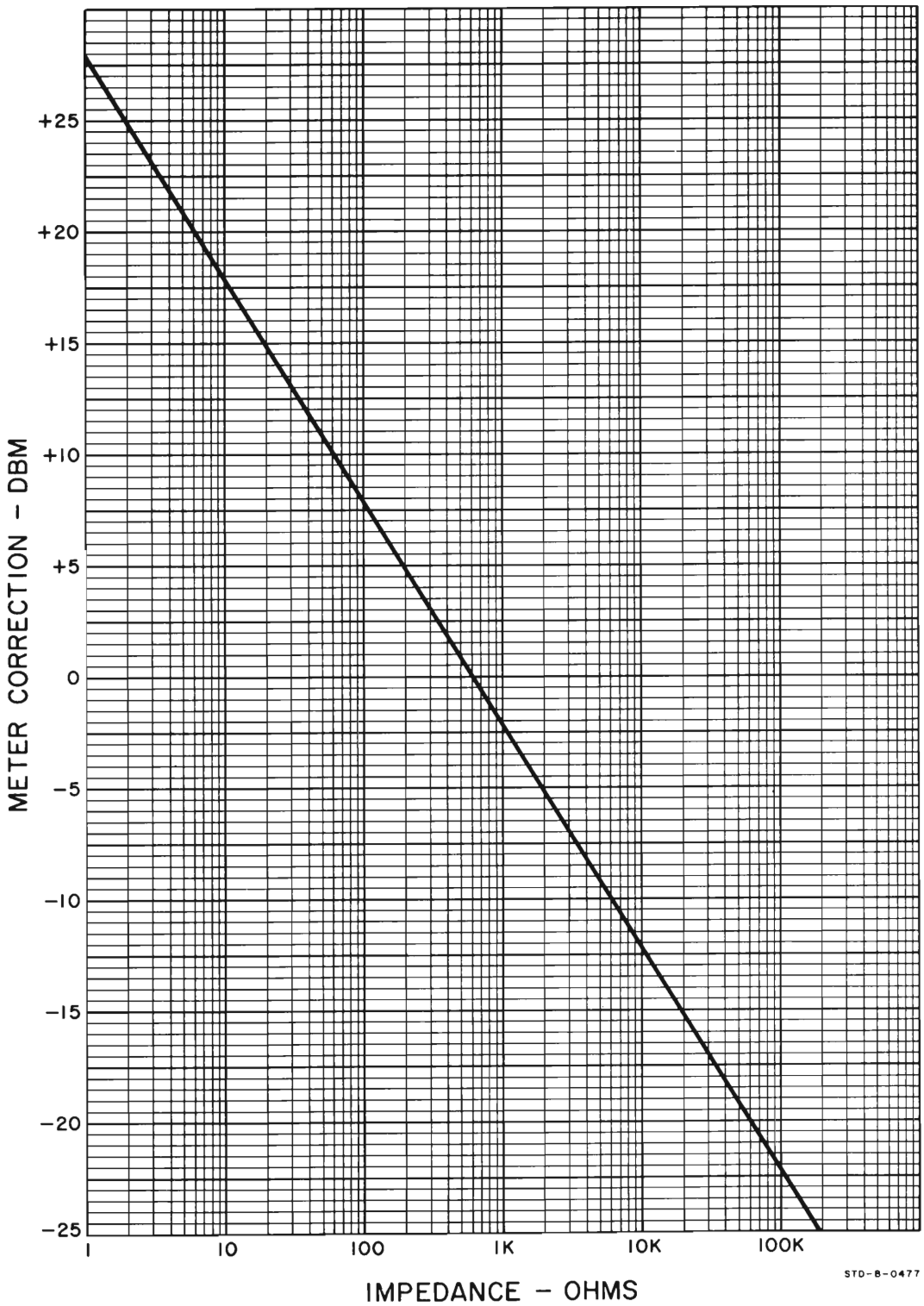

Figure 3-2. Impedance Correction Graph

Artisan Technology Group - Quality Instrumentation ... Guaranteed | (888) 88-SOURCE | www.artisantg.com

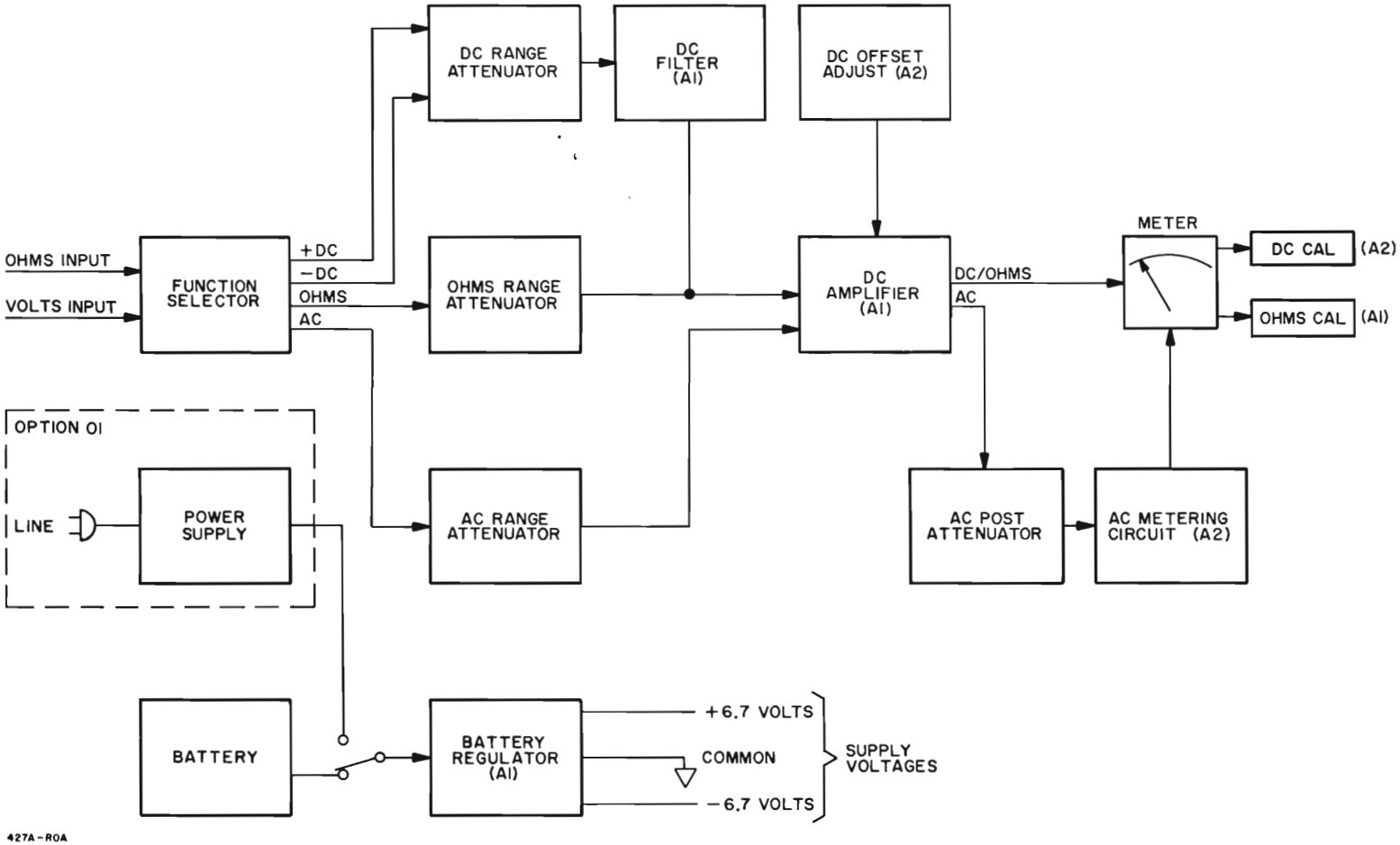

Figure 4-1. Simplified Block Diagram

Artisan Technology Group - Quality Instrumentation ... Guaranteed | (888) 88-SOURCE | www.artisantg.com

SECTION IV
THEORY OF OPERATION

4-1. GENERAL.

4-2. The Model 427A measures ac voltage, dc voltage, and resistance. It is battery operated, but with Option 01, can be powered by line voltage. Figure 4-1 shows a simplified block diagram of the 427A.

4-3. The Battery Regulator (A1) regulates the battery output and provides +6.7 and -6.7 volt bias supply to the amplifiers. The 427A uses two amplifiers, the DC Amplifier (A1) and the AC Metering Circuit (A2). The former is a high input impedance unity gain amplifier used to amplify dc and resistance inputs. It also serves as a preamplifier for ac signals. The AC Metering Circuit amplifies ac signals from the preamplifier, converts them to dc signals proportional to the average ac, and connects them to the meter. The meter is calibrated to display the rms value of the ac input.

4-4. The DC Offset Adjust (A2) compensates for leakage current from the dc amplifier, and DC CAL and OHMS CAL are resistive circuits used for calibration.

4-5. DC OPERATION.

4-6. Figure 4-2 shows the Model 427A in the DC Mode of Operation. The dc input is first applied to the DC Range Attenuator where it is attenuated by 10 dB for each step of the attenuator. The dc signal from the attenuator goes to the DC Filter, and the filter rejects any ac superimposed noise that may be present on the input. The dc output of the filter goes to the DC Amplifier (A1) and then to the meter. The DC Amplifier matches the high impedance of the attenuator to the low impedance of the meter. The DC CAL circuits are resistive circuits in series with the meter used to adjust the meter current to calibrate the lower ranges.

4-7. OHMS OPERATION.

4-8. Figure 4-3 is a block diagram of the Model 427A in the OHMS Mode of Operation. With the input open, R_a and R_b form a voltage divider. The voltage across R_b causes full scale current to flow through the meter. The OHMS CAL circuit adjusts the meter current for an indication of ∞ with the input open. When R_x is equal to the parallel combination of R_a and R_b, the total resistance from the OHMS terminal to ground will be half the parallel combination of R_a and R_b, the voltage into the amplifier will be halved, and the meter indication will be half scale. The Model 427A is designed so that the full RANGE setting will be displayed in the center of the scale. For example, 10 Ω on the X10 range is a center scale reading.

4-9. AC OPERATION.

4-10. Figure 4-4 shows a block diagram of the 427A in the AC Mode of Operation. The input signal goes to the AC Range Attenuator. On the 1 volt range and below, the signal is not affected by the AC Range Attenuator; but on all the higher ranges, the signal is attenuated by 50 dB. Capacitor C3 adjusts the frequency response of the attenuator with a 3 volt 100 KHz input. The signal from the AC Range Attenuator goes through the DC Amplifier to the AC Post Attenuator where it is attenuated by 10 dB for each step of the RANGE selector. The DC Amplifier matches the low impedance of the Post Attenuator to the high impedance of the Range Attenuator, acting as a preamplifier.

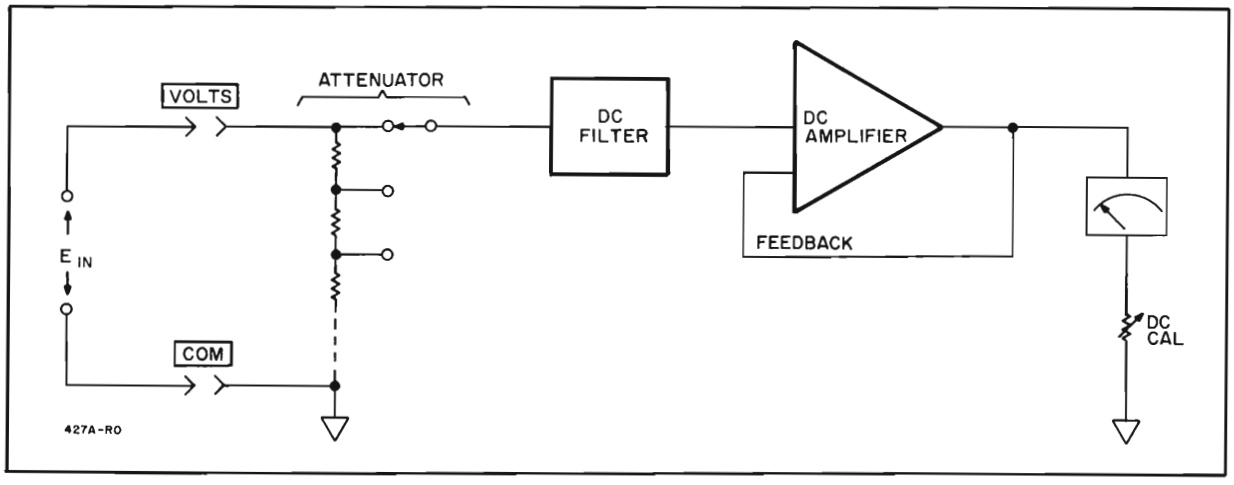

Figure 4-2. DC Operation

Artisan Technology Group - Quality Instrumentation ... Guaranteed | (888) 88-SOURCE | www.artisantg.com

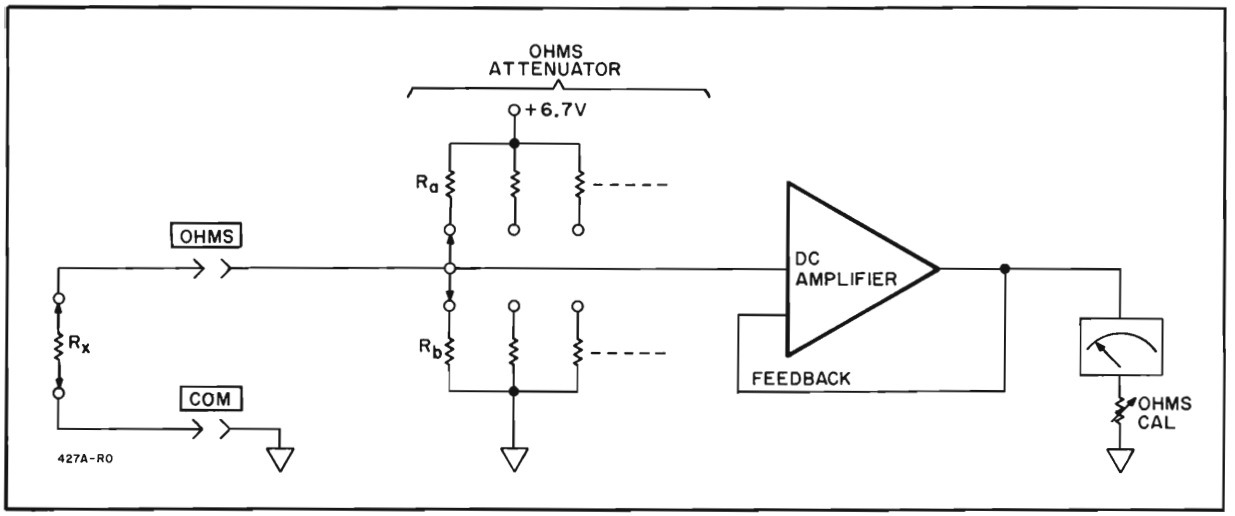

Figure 4-3. Ohms Operation

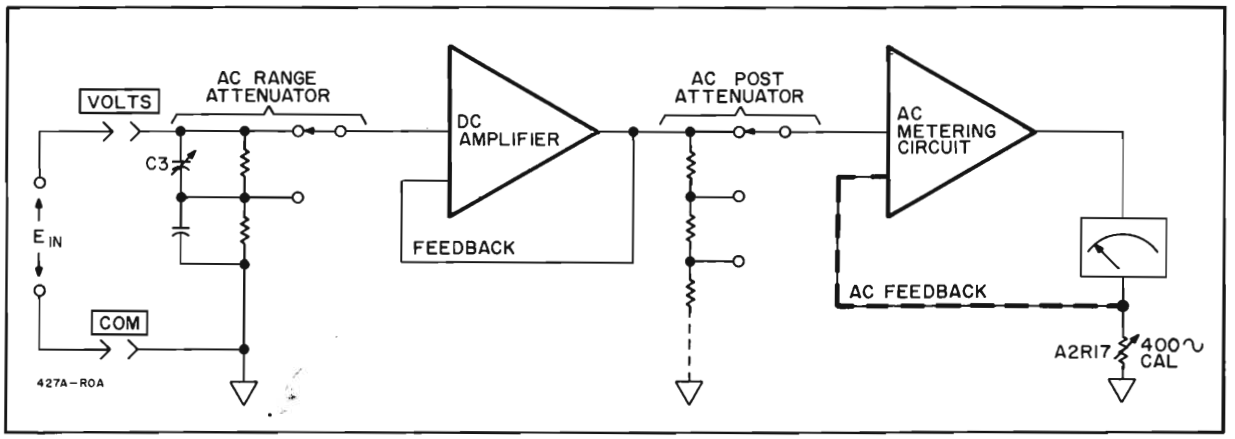

Figure 4-4. AC Operation

4-11. The AC Metering Circuit contains both a feedback stabilized ac amplifier and an averaging meter circuit. The meter circuit converts the ac signal to a dc voltage proportional to the average of the ac amplifier output. A2R17 adjusts the current through the meter so that the scale reading is in rms volts.

4-12. CIRCUIT DESCRIPTIONS.

4-13. DC AMPLIFIER (A1).

4-14. Figure 6-3 is the schematic diagram of the Model 427A. The input to the DC Amplifier (A1) is applied through Pin 2 to the impedance converter A1Q6. A field effect transistor is used as the impedance converter because of its characteristically high input impedance. Transistors A1Q7 and A1Q9 make up a two-stage amplifier, with A1Q9 as an emitter follower output stage. The signal from the emitter of A1Q9 is fed back to the base of A1Q7 for gain stabilization.

4-15. A1Q8 acts as a constant current source for A1Q6. The constant current from A1Q8 assures linearity in A1Q6 and helps minimize drift.

4-16. DC OFFSET (A2).

4-17. The gate leakage from A1Q6 (I_{GSS}) amounts to a fraction of a nanoamp. This current is insignificant with the input shorted; but with the input open, it flows through the DC Range Attenuator resistance of 10 M Ω resulting in a few millivolts deflection on the lower ranges. Consequently, the meter indications with the input open and with the input shorted can be different. When measuring across a low impedance, I_{GSS} flows mostly through the low impedance; and this difference does not effect the measurement. Unless I_{GSS} is compensated for, it will effect measurements made across high impedances (>1 M Ω).

4-18. The DC Offset Circuit (A2) (see Figure 4-5) compensates for the leakage from A1Q6. A positive voltage tapped from A2R7 reverse biases A2CR1. The reverse leakage current from A2CR1 (I_R) meets an extremely high resistance at the gate of A1Q6 and passes through the much lower resistance of the attenuator, in a direction opposite to that of I_{GSS}. By adjusting A2R7, I_R can be set so that it and I_{GSS} cancel each other. The net voltage drop across the attenuator

Artisan Technology Group - Quality Instrumentation ... Guaranteed | (888) 88-SOURCE | www.artisantg.com

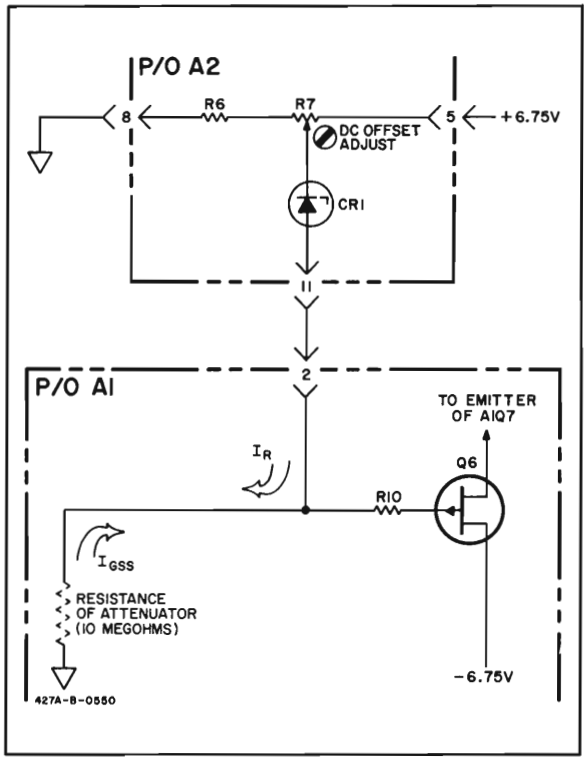

Figure 4-5. DC Offset Circuit

would then be zero. An alternative method of minimizing the effects of I_{GSS} would be to zero the instrument with the impedance of the measurement source connected to the input terminals rather than with the input shorted. A2CR1 has a temperature characteristic quite similar to that of A1Q6. Therefore, both I_{GSS} and I_R change by approximately the same amount with temperature and the amount of additional error at higher temperatures is lessened.

4-19. AC METERING CIRCUIT (A2).

4-20. Figure 6-3 contains the schematic of the AC Metering Circuit. The ac input from the ac post attenuator is applied through A2C1 to the base of A2Q1. A2Q2 is an emitter follower that provides impedance matching to common emitter output stage A2Q3. Capacitor A2C4 provides an ac feedback path for gain stabilization.

4-21. The output from the collector of A2Q3 is rectified by A2CR3 and A2CR4 and applied to the meter movement.

4-22. Resistor A2R17 is used to calibrate the amplifier at low frequency and is adjusted for full scale meter deflection with a 10 mV, 400 Hz input. Capacitor A2C3 is used to calibrate the amplifier at high frequency. With a 10 mV, 1 MHz input, A2C3 is adjusted for full scale.

4-23. BATTERY REGULATOR A1 (See Figure 6-3).

4-24. The Battery Regulator regulates the dc voltage from the 22.5 volt battery or from the optional power supply. The voltage drop across A1CR2 and the emitter-base junction of A1Q3 provides the -6.7 volt reference for the power supply and the -6.7 volt output. A1Q5 senses changes in the +6.7 volt output and controls A1Q2, the positive series regulator. A1Q1 is a current source for A1Q5, and diodes A1CR3, CR4, and CR5 provide temperature stabilization. Transistor A1Q4 provides a current shunt for A1CR2 to keep its voltage constant under heavy current loads.

Artisan Technology Group - Quality Instrumentation ... Guaranteed | (888) 88-SOURCE | www.artisantg.com

Table 5-1. Required Test Equipment

INSTRUMENT TYPE	REQUIRED CHARACTERISTICS	USE	RECOMMENDED MODEL
DC Voltage* Standard	Range: 0-300 V Accuracy: ±0.2%	Performance Checks	-hp- Model 738BR Voltmeter Calibrator
Test Oscillator*	Frequency Range: 10 Hz to 1 MHz Output: 0 to 3 Vac	Performance Checks	-hp- Model 652A Oscillator
Variable Line Transformer	Frequency Range: 50 to 60 Hz Voltage Range: 0 to 120 V	Performance Checks	Powerstat Type 116B
Decade Resistor	Range: 10Ω to 10 MΩ Accuracy: ±0.5%	Performance Checks	General Radio Model 1432Z Decade Resistor
DC Voltmeter	Range: 0-50 Vdc Accuracy: ±2%	Troubleshooting	-hp- Model 427A Voltmeter
AC Voltmeter	Range: 0-50 Vac Accuracy: ±2%	Troubleshooting	-hp- Model 427A Voltmeter
Resistors	100 kΩ ± .1% 1 MΩ ± .1%	Performance Checks	-hp- Part No. 0811-0460 -hp- Part No. 0811-0473
* Contained in -hp- E02-738BR VTVM Calibration System			

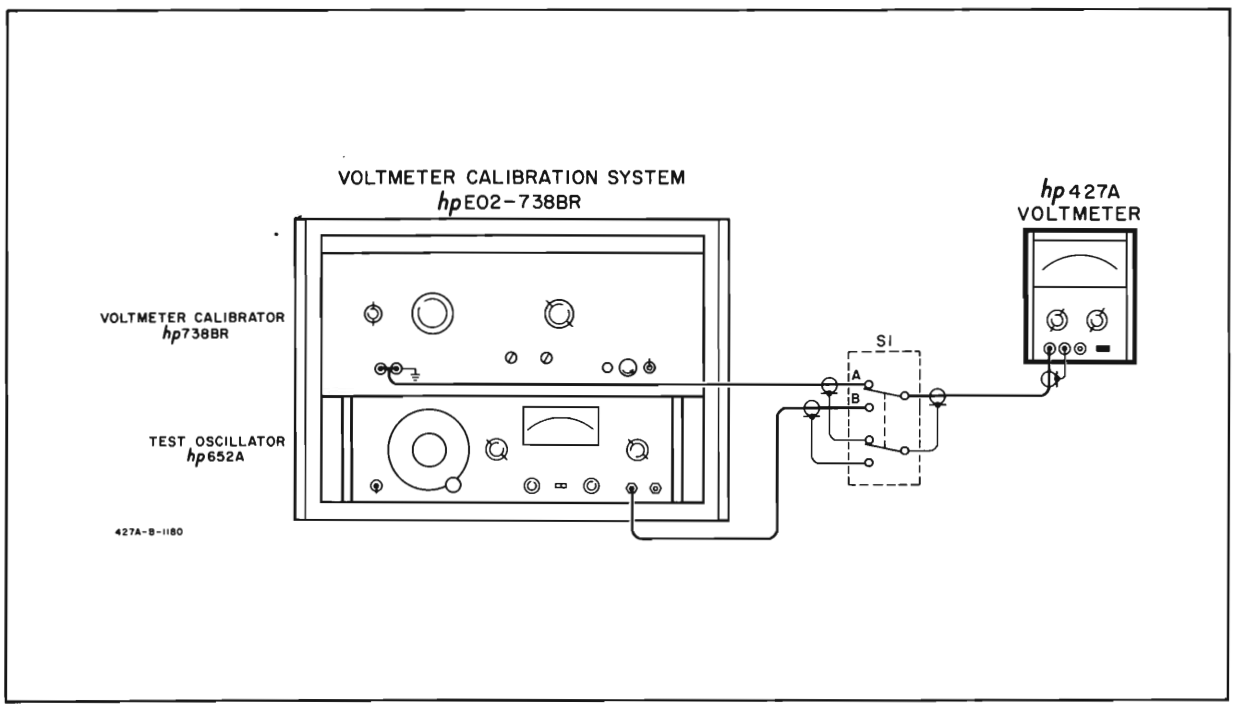

Figure 5-1. AC Accuracy and Frequency Response Check

Artisan Technology Group - Quality Instrumentation ... Guaranteed | (888) 88-SOURCE | www.artisantg.com

SECTION V
MAINTENANCE

5-1. INTRODUCTION.

5-2. This section contains information necessary to maintain the Model 427A. The following paragraphs describe the Performance Checks, the Calibration Procedures, and the Troubleshooting Procedures.

5-3. REQUIRED EQUIPMENT.

5-4. Table 5-1 is a list of the equipment needed to properly maintain the Model 427A. If the recommended model is not available, use any substitute that meets the required characteristics.

5-5. PERFORMANCE CHECKS.

5-6. The Performance Checks are "in cabinet" tests that compare the Model 427A with its specifications. These procedures can be used both for incoming inspection and periodic inspection. A Performance Check Test Card is provided at the end of this section for recording the performance of the Model 427A during the performance checks. The card can be removed from the manual and used as a permanent record of the incoming inspection or of a routine performance check. If the Model 427A does not meet its specifications, refer to the Adjustment and Calibration Procedures, Paragraph 5-25.

5-7. AC ACCURACY AND FREQUENCY RESPONSE CHECK.

5-8. The AC Accuracy and Frequency Response Check requires a test oscillator that is flat within ± 0.5% from 10 Hz to 1 MHz. The absolute value of the applied voltage must be accurate within ±0.2%. The -hp- Model 738BR Voltmeter Calibrator produces a 400 Hz signal that is within less than 0.2% of the indicated output. The -hp-Model 652A Test Oscillator can be adjusted to within less than 0.25% of a desired reference from 10 Hz to 10 MHz.

NOTE

Before beginning the Performance Checks, be sure to adjust the mechanical meter zero according to the steps in Paragraph 3-6.

5-9. AC ACCURACY CHECK.

5-10. Connect the test oscillator, and the voltmeter calibrator as shown in Figure 5-1.

a. Set the voltmeter calibrator for an output of 0.01 volts at 400 Hz.

b. Set S1 in Figure 5-1 to position A.

c. Set the Model 427A FUNCTION to ACV and the range to 0.01.

d. The 427A should read 0.01 volts rms ± 2% (2 minor scale division).

e. Repeat steps a through d for each ac RANGE selection through 300 V by setting the voltmeter calibrator output to the full scale value for each range. The Model 427A indication should not vary from the known input by more than 2% on any range. 2% corresponds to 2 minor divisions on the 0-1 scale and 1-1/2 minor divisions on the 0-3 scale.

f. Set the Model 427A to the 1 volt range and apply 0.9, 0.8, 0.7, 0.6, 0.5, 0.3, 0.2 and 0.1 volt signals. In each case the reading should be within two minor divisions of the known input signal.

g. Set the Model 427A to the 3 volt range and apply 2.5, 2, 1.5, 1, and 0.5 volt signals. In each case the reading should be within 1-1/2 minor divisions of the known input signal.

5-11. FREQUENCY RESPONSE CHECK.

5-12. The frequency range of the -hp- Model 652A is 10 Hz to 10 MHz. The set level indication mentioned in the following steps is used to re-establish the proper amplitude each time the frequency is changed.

a. Set S1 in Figure 5-1 to position B. Set the Model 427A RANGE to 0.01.

b. Set the test oscillator to 400 Hz and adjust the output for a 0.95 indication on the 427A 0-1 scale.

c. Set test oscillator to expand, and adjust the set level control (REF SET) for convenient meter indication.

d. Record set level indication for use as a reference in steps e and f.

e. Change the oscillator frequency to 10 Hz and reset the oscillator amplitude to the set level indication established in step c. DO NOT readjust the set level control on the oscillator. The 427A indication should not vary by more than ±2 minor scale divisions (±2%).

f. Repeat step e for 100 Hz, 1 kHz, 10 kHz, 100 kHz, 500 kHz and 1 MHz. In each case the 427A indication should not vary by more than ±2 minor scale divisions (±2%).

5-13. Repeat Paragraph 5-11 with the 427A RANGE set to 3 volts, and test oscillator output set to give 3 V reading on 427A in step b. The 427A reading should not vary by more than ±2% (±1-1/2 small scale divisions).

Artisan Technology Group - Quality Instrumentation ... Guaranteed | (888) 88-SOURCE | www.artisantg.com

5-14. RESISTANCE ACCURACY CHECK.

5-15. To check the resistance accuracy, precision resistances are needed. Figure 5-2 shows the resistance accuracy check using a General Radio Model 1432Z Decade Resistor. The resistance used should be accurate to within ±0.5% and should have a range of 10 ohms to 10 M ohms.

a. With the input open, set the Model 427A FUNCTION to OHMS and the RANGE to X10. Adjust the DC ZERO/Ω∞ adjustment for an indication of ∞ on the meter face. (The needle should rest on the mark just to the left of ∞).

b. Connect the decade resistor and the Model 427A as shown in Figure 5-2, and set the decade for 10 Ω.

c. The 427A meter should read within ±5% of the known resistance (- one small scale division, + one-half small division).

d. Repeat steps a through c using the RANGE and decade resistor settings listed in Table 5-2.

NOTE

The DC ZERO/Ω∞ adjustment need only be made on the X10 and X1K ranges.

Table 5-2. Resistance Accuracy Check

RANGE	DECADE
X100	100 Ω
X1K	1000 Ω
X10K	10 KΩ
X100K	100 KΩ
X1M	1 MΩ
X10M	10 MΩ

5-16. DC ACCURACY.

5-17. The DC Accuracy Check requires a dc voltage standard that is accurate to within ±0.2% of its indicated output from 0.1 volt to 300 V. The -hp- Model 738BR Voltmeter Calibrator is accurate to within ±0.1% of the indicated output. Figure 5-3 shows the test setup for the DC Accuracy Check.

a. Set the Model 427A FUNCTION to +DCV and the RANGE to 0.1.

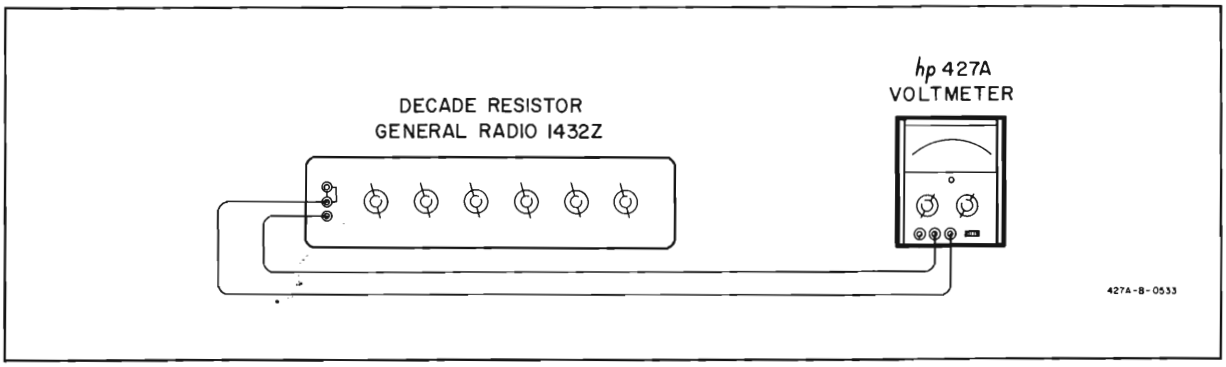

Figure 5-2. Resistance Accuracy Check

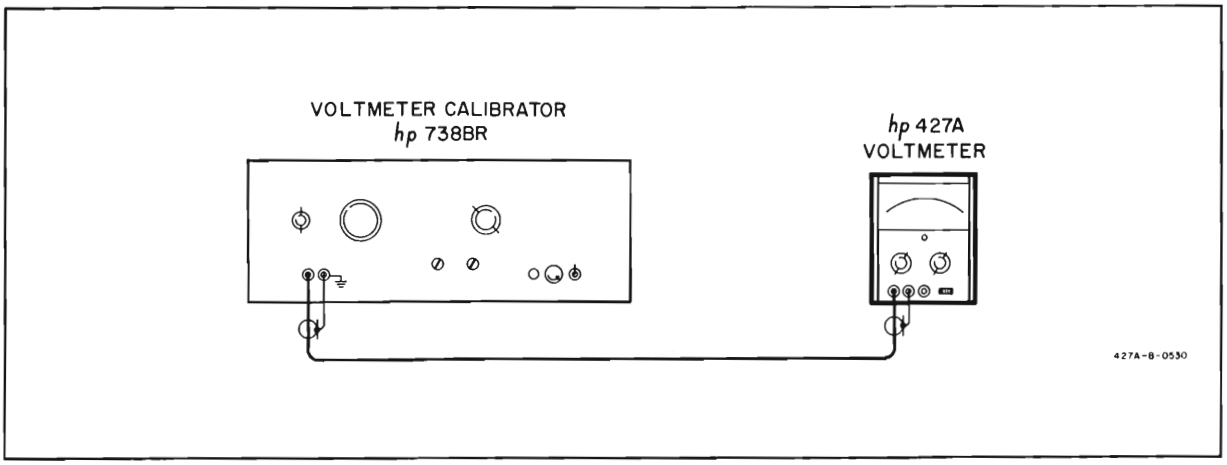

Figure 5-3. DC Accuracy and Linearity Check

Artisan Technology Group - Quality Instrumentation ... Guaranteed | (888) 88-SOURCE | www.artisantg.com

b. Adjust the DC ZERO/Ω∞ for zero. This adjustment need only be made on the 0.1 volt range.

c. Connect the voltmeter calibrator and the Model 427A as shown in Figure 5-3.

d. Set the voltmeter calibrator output to 0.1 volts dc. The Model 427A should read 0.1 volt ±2%.

e. Repeat steps a through e for each RANGE selection to 300 V by setting the voltmeter calibrator output to the full scale value for each range. The Model 427A indication should not vary from the known input by more than ±2% on any range. 2% corresponds to 2 minor divisions on the 0-1 scale and 1-1/2 minor division on the 0-3 scale.

f. Set the dc RANGE to 1000 V and the voltmeter calibrator to 300 V. The Model 427A should read 300 V ±2% of full scale on the 1000 volt range.

g. Set the Model 427A to the 1 volt range and apply 0.9, 0.8, 0.7, 0.6, 0.5, 0.4, 0.3, 0.2, and 0.1 volt dc signals from the voltmeter calibrator. In each case the reading should be within two minor divisions of the known input voltage.

h. Set the Model 427A to the 3 volt range and apply 2.5, 2, 1.5, 1, and 0.5 volt dc signals. In each case the reading should be within 1/2 minor division on the 0-3 scale.

i. Repeat setps a through f with the FUNCTION set to -DCV and the voltmeter calibrator set for a negative output. The test results should be the same.

WARNING

THE VARIABLE LINE TRANSFORMER PROVIDES A DANGEROUS AMOUNT OF POWER. INSURE THAT THE CASE OF THE 427A IS GROUNDED AND THAT THE TRANSFORMER IS PROPERLY WIRED AND FUSED BEFORE PERFORMING PARAGRAPHS 5-18, 5-19.

5-18. AC REJECTION CHECK.

5-19. A peak ac superimposed noise signal 100 times the full scale input should affect the Model 427A reading less than 1%. Figure 5-4 shows the test setup using a variable line transformer as a noise generator. A 7.07 volt rms output from the variable line transformer corresponds to a 10 volt peak noise signal. The 10 volt noise signal will be applied to the 0.1 volt dc range.

a. Set the 427A FUNCTION to +DCV and short the input. Set the RANGE to 0.1 and adjust the DC ZERO/Ω∞ for 0 meter indication.

b. Switch the FUNCTION to ACV and the RANGE to 10. Connect the variable line transformer and the Model 427A as shown in Figure 5-4.

c. Adjust the transformer output for a reading of 7.07 volts rms on the 427A.

d. Switch the 427A FUNCTION to +DCV and the RANGE to 0.1.

e. The meter reading should be 0 ±1% (1 minor scale division).

NOTE

The meter may move upscale momentarily and then return to zero. This indicates the charging of the DC Filter capacitors and is normal.

f. Repeat steps a through e using the 1 volt dc range and 70.7 volt rms signal from the transformer.

5-20. INPUT IMPEDANCE CHECK.

5-21. INPUT RESISTANCE CHECK.

5-22. Figure 5-5 shows the setup for the input resistance check. A 1 MΩ resistor is connected in series with the input, and the voltage drop across the input resistance will be:

$$E_R = E_{applied}\left(\frac{R_{in}}{R_{series} + R_{in}}\right)$$

With 1 volt applied, E_R will be 0.91 volt if the input resistance is 10 MΩ. E_R varies directly with changes in R_{in}.

a. Connect the Model 427A and the voltmeter calibrator to position A illustrated in Figure 5-5. Set the Model 427A FUNCTION to +DCV and RANGE to 1 V.

b. Set the voltmeter calibrator for +1 V output.

c. Connect the voltmeter calibrator to position B shown in Figure 5-5.

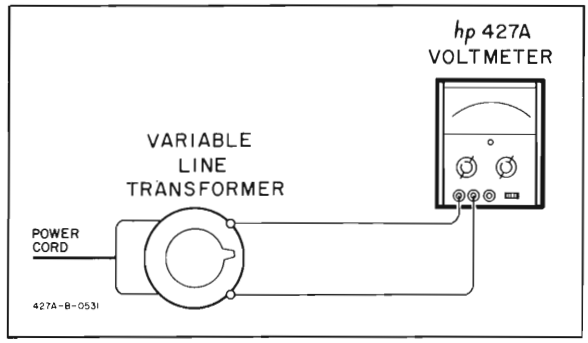

Figure 5-4. AC Rejection Check

Artisan Technology Group - Quality Instrumentation ... Guaranteed | (888) 88-SOURCE | www.artisantg.com

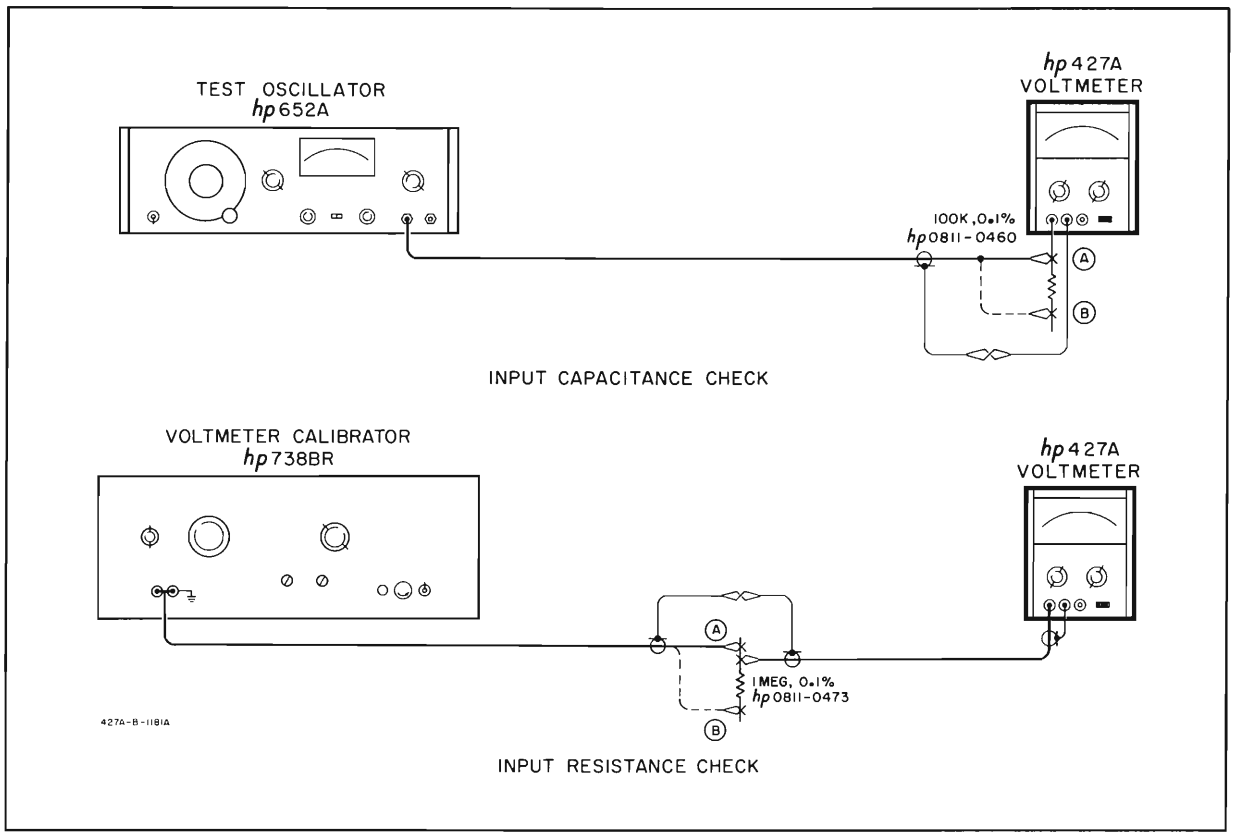

Figure 5-5. Input Impedance Check

d. The voltmeter reading should drop to 0.91, indicating an input resistance of 10 MΩ. The input resistance may vary slightly, and a tolerance of ±2% should be allowed.

5-23. INPUT CAPACITANCE CHECK.

5-24. The 10 MΩ input resistance is shunted with 40 pF on the 0.01 through 1 volt ac ranges and with 20 pF on the 3 through 300 volt ac ranges. For this input capacitance check a 100 kΩ resistor is placed in series with the meter input. At a known frequency, the reactance of the shunt capacitance will be equal to 100 kΩ. At this point the voltage across the input resistance and shunt capacitance will be equal to 0.707 times the input voltage. The input capacitance may be checked by finding the frequency at which the displayed voltage drops to 0.707 times the input. As input capacitance decreases, the roll off frequency increases, and vice versa.

a. Connect oscillator and Model 427A to position A of the input capacitance check (Figure 5-5), and set the Model 427A FUNCTION to ACV and RANGE to 1 V.

b. Set the oscillator frequency to 60 Hz and adjust the amplitude for a full scale display on the Model 427A.

c. Connect the oscillator to position B and increase the frequency until the meter display drops to 0.707. The frequency at this point should be about 40 kHz. The input capacitance is nominally specified at 40 pF and may vary from instrument to instrument. A frequency variation of ±10% is acceptable.

d. Repeat steps a through c using the 3 volt range of the 427A. Increase the frequency in step c until the reading drops to 2.1 volts. This should occur at about 80 kHz. This verifies input capacitance of 20 pF on 3 volt range and above.

5-25. ADJUSTMENT AND CALIBRATION PROCEDURES.

5-26. The following adjustment and calibration procedures should be used only if it has been determined through the performance checks in Paragraphs 5-5 through 5-24 that the Model 427A is not performing within its specifications. The location of the internal adjustments is shown in Figures 5-6 and 6-2.

5-27. COVER REMOVAL.

5-28. To remove the top or bottom covers, remove the Phillips screws securing the cover, slide the cover about 1 inch to the rear, and lift it off. To replace the cover, reverse the removal procedure.

5-29. To remove a side cover, remove the four Phillips screws and lift it off.

Artisan Technology Group - Quality Instrumentation ... Guaranteed | (888) 88-SOURCE | www.artisantg.com

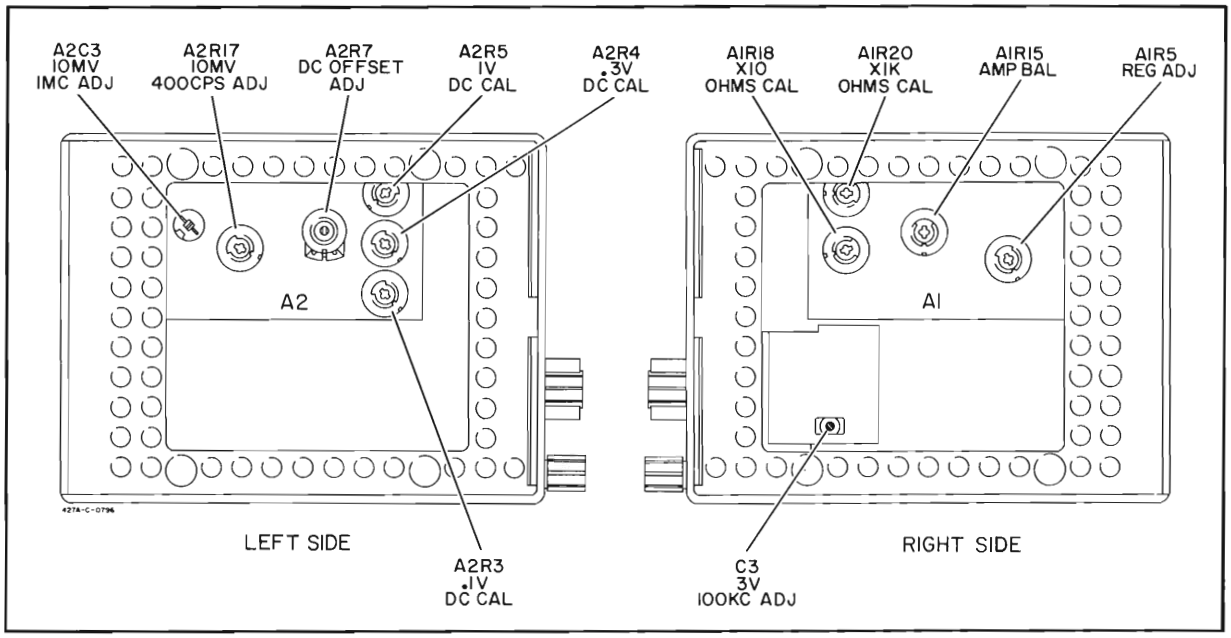

Figure 5-6. Location of Internal Adjustments

NOTE

Before beginning the calibration, be sure to adjust the mechanical meter zero according to the steps in Paragraph 3-6.

5-30. AMPLIFIER BALANCE AND ZERO OFFSET ADJUSTMENT.

a. Short VOLTS and COM terminals; set FUNCTION to either +DCV or -DCV.

b. Set DC ZERO/Ω∞ for zero deflection.

c. Remove shorting connection from VOLTS and COM terminals. If meter deflects, adjust A2R7 OFF ADJ for zero deflection. Short VOLTS and COM terminals and recheck zero adjustment. Repeat steps b and c if necessary.

d. Set the FUNCTION to +DCV and turn DC ZERO/Ω∞ fully to the right. Set Range to 0.1. Record position of indicator.

e. Turn FUNCTION to -DCV and rotate DC ZERO/Ω∞ fully to the left. Note meter indication.

f. Repeat steps d and e and adjust A1R15 AMP BAL until the meter indication in both steps is the same.

NOTE

If the range of adjustment A1R15 is insufficient, refer to Paragraph 5-74.

5-31. REGULATOR ADJUST.

a. Complete Amplifier Balance and Offset adjustment (Paragraph 5-30).

b. Short VOLTS to COM and OHMS to COM. Set FUNCTION to +DCV. Meter should be zeroed within 2 minor divisions upscale.

c. Switch FUNCTION to OHMS. If meter deflects, adjust A1R5 REG ADJ for zero deflection. This may affect +DCV zero setting, so rotate FUNCTION back and forth between OHMS and +DCV, and adjust A1R5 until meter reading is the same in both positions.

5-32. AC CALIBRATION.

5-33. Three adjustments must be made to calibrate the ac circuits in the Model 427A. First, A2R17 adjusts the absolute amplitude calibration with a 10 mV 400 Hz input. Then A2C3 is adjusted with a 10 mV 1 MHz input to calibrate the high frequency response. Finally the frequency response of the AC Range Attenuator is set by adjusting C3 with a 3 V 100 kHz signal applied to the input.

5-34. LOW FREQUENCY CALIBRATION.

a. Connect the Model 427A as shown in Figure 5-1, and set S1 to position A.

b. Set the voltmeter calibrator output to 400 Hz at 0.01 volt rms, and set the 427A RANGE to 0.01 and FUNCTION to ACV.

c. Adjust A2R17 400 CPS ADJ for exactly 0.01 volt indication on the 427A. If the range of adjustment A2R17 is insufficient, refer to Paragraph 5-81.

5-35. HIGH FREQUENCY CALIBRATION.

a. Connect the Model 427A as shown in Figure 5-1.

Artisan Technology Group - Quality Instrumentation ... Guaranteed | (888) 88-SOURCE | www.artisantg.com

Set S1 to position B. Set 427A RANGE to 0.01 and FUNCTION to ACV.

b. Set the oscillator to 400 Hz and adjust the output for exactly a 0.01 volt indication on the 427A.

c. Adjust the set level control (REF SET) on Test Oscillator for a convenient meter indication. Record set level indication for use as a reference in step d.

d. Adjust oscillator frequency to 1 MHz and adjust the amplitude vernier to the set level indication established in step c. DO NOT readjust the set level control.

e. Adjust A2C3 1 MC ADJ for exactly a 0.01 volt indication on the Model 427A. If the range of adjustment A2C3 is insufficient, refer to Paragraph 5-76.

f. Rotate 427A RANGE switch to 3, set S1 to position A. Adjust the voltmeter calibrator for an output of 3 V at 400 Hz and record indication on 427A meter.

g. Change S1 to position B. Set the oscillator to 400 Hz, and adjust amplitude for 427A meter indication recorded in step f.

h. Adjust the set level control (REF SET) for a convenient reference.

i. Increase oscillator frequency to 100 kHz, and readjust oscillator amplitude to set level reference established in step h.

j. Adjust C3 3 V 100 kHz ADJ for exactly a 3 volt indication on the 427A.

5-36. RESISTANCE INFINITY ADJUSTMENT.

5-37. The resistance calibration is affected by the amplifier balance, zero offset, and regulator adjustments. Perform the steps in Paragraph 5-30 and 5-31 before making the resistance infinity adjustment.

a. Set FUNCTION to OHMS and RANGE to X10.

b. Short OHMS to COM and adjust the DC ZERO/Ω∞ for zero indication. Open the input and adjust A1R18 X10 OHMS CAL for an ∞ indication. The indicator should rest on the mark just to the left of ∞.

c. Change RANGE to X1K, short OHMS to COM and adjust DC ZERO/Ω∞ for zero indication. Open the input and adjust A1R20 X1K OHMS CAL for an ∞ indication.

5-38. DC CALIBRATION.

5-39. A dc voltage standard is needed to calibrate the dc ranges. A2R3, A2R4, and A2R5 are adjusted for full scale inputs on the 0.1, 0.3, and 1 volt ranges respectively. The 3 volt through 1000 volt ranges are calibrated by A2R5 and require no special calibration. Use the test setup in Figure 5-3.

a. Set FUNCTION to +DCV and RANGE to 0.1. Set the voltmeter calibrator output to +0.1 volt.

b. Adjust A2R3 0.1 V DC CAL for full scale on the 0-1 scale.

c. Rotate RANGE to 0.3, and change the calibrator output to +0.3 volt.

d. Adjust A2R4 0.3 V DC CAL for 3 on the 0-3 scale.

e. Rotate RANGE to 1 and change the calibrator output to 1 volt.

f. Adjust A2R5 1 V DC CAL for full scale on the 0-1 scale.

5-40. ALTERNATE PERFORMANCE CHECKS AND CALIBRATION PROCEDURES.

5-41. The following alternate procedures should be used only if the equipment in Table 5-1 is not available. In each alternate procedure use an instrument of the specified accuracy. If a less accurate instrument is used, the calibration or test may not be within the Model 427A specifications. To guarantee a specific accuracy, use a standard at least four times more accurate than the Model 427A.

5-42. AC CIRCUITS.

5-43. Any test oscillator with low distortion (<2%) may be used as an ac voltage standard. If the distortion level is too high, the calibration may be wrong, as the 427A is an average responding rms calibrated meter. (The effects of harmonic distortion are discussed in more detail in Section III, Paragraphs 3-14 and 3-15.)

5-44. Monitor the oscillator output with a recently calibrated rms voltmeter known to be four times as accurate as the Model 427A over the same band of frequencies. The rms voltmeter serves as a reference. Each time the oscillator frequency is changed, readjust the output for the reference. The Model 427A ac calibration is based on a 400 Hz absolute reference, so always start the ac calibration or performance checks at 400 Hz.

5-45. RESISTANCE CIRCUITS.

5-46. If a decade resistor is not available, a selection of precision resistors may be used. The resistors should be at least 1% resistors and the values selected should correspond to the RANGE settings. The -hp- part numbers for 1% resistors for each range are given in Table 5-3.

Artisan Technology Group - Quality Instrumentation ... Guaranteed | (888) 88-SOURCE | www.artisantg.com

Table 5-3. 1% Resistors

RESISTOR (±1%)	-hp- PART NO.
10Ω	0757-0984
100Ω	0757-0198
1kΩ	0757-0159
10kΩ	0757-0839
100kΩ	0757-0367
1MΩ	0698-3583
10MΩ	0698-3592

5-47. DC CIRCUITS.

5-48. A precision dc voltage source is required for dc calibration and performance checks. Since the 427A is only calibrated on the 1 volt, 0.3 volt and 0.1 volt ranges, only three different voltages are needed.

5-49. A mercury battery has good short term stability. Connect a series voltage divider with a variable output across the battery and monitor the output with a recently calibrated dc voltmeter known to be four times as accurate as the Model 427A. Use this output to calibrate the 0.1, 0.3, and 1 volt ranges.

5-50. AC REJECTION.

5-51. To check AC Rejection on 0.1 volt range an oscillator with output of 10 volt peak-to-peak into 10 M ohms may be used. If the -hp- Model 738BR Voltmeter Calibrator is available a 400 Hz 10 volt peak-to-peak output may also be used to check the AC Rejection of Model 427A.

5-52. INPUT IMPEDANCE CHECK.

5-53. Measure the resistance between the VOLTS and COM terminals directly with the Model 427A Function Switch at +DCV or -DCV using an accurate ohmmeter. Another Model 427A could be used for this purpose. If an L-C meter or capacitance bridge is available, measure the input capacitance between the VOLTS and COM terminals directly. Be sure the Model 427A FUNCTION switch is in the ACV position.

5-54. BATTERY REPLACEMENT.

5-55. Figure 5-7 shows the battery holder and the battery connections. Turn the twist-lock fastener 1/4 turn counterclockwise, tilt the battery and holder toward the rear of the instrument, and lift out. Replace the battery with an Eveready 763 or RCA VS102, 22 1/2 volt dry cell

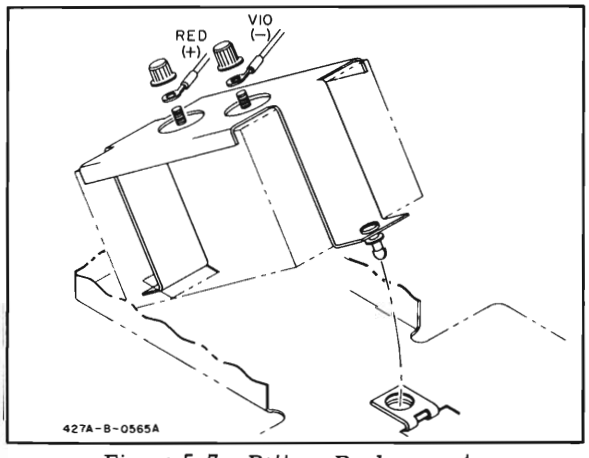

Figure 5-7. Battery Replacement

5-56. TROUBLESHOOTING.

5-57. When the Model 427A operates improperly, first adjust and calibrate it according to the procedures in Paragraph 5-25. If calibration is impossible, then proceed with the troubleshooting steps.

5-58. Check the instrument for obvious evidence of trouble, such as loose or broken wires or broken connectors. Check the printed circuit boards for cracks and separations, and ensure that all connectors and pins are clean and tight.

5-59. Isolate the trouble to a particular circuit using the troubleshooting table (Table 5-4) and the Theory of Operation (Section IV). Then refer to the Troubleshooting steps for that circuit in the following paragraphs.

Table 5-4. Troubleshooting

SYMPTOM	PROBABLE TROUBLE AREA
Battery ok, no response to input.	Power Supply. (See Paragraph 5-60.)
All +DCV ranges pegged with no input. ACV and OHMS ok.	DC offset circuit. Check A2CR1. Then check A1Q6.
Nonlinear tracking on voltage ranges.	DC Amplifier. Check A1Q8 and associated circuit. Check value of range resistors. Check A1R14 and A1Q9.
Constant upscale deflection on lower +DCV ranges; voltage at TP1 low.	DC Amplifier. (See Paragraph 5-63.)
Meter pegs on +DCV and OHMS ranges.	DC Amplifier; check A1Q6, A1Q8, and A1Q9. (See Paragraph 5-65.)
OHMS range always reads near zero, DCV and ACV ok.	Range resistor (R_a in Figure 4-3) open. Check R19 through R25 on S1. Range resistors (R_b in Figure 4-3) shorted. Check R12 through R18 on S1. Check Power Supply.
OHMS always reads ∞. DCV and ACV ok.	Either one of R19 through R25 (R_a) shorted or one of R12 through R18 open.
Intermittent operation.	Power supply, check A1-Q4 (See Paragraph 5-60.)
Zero-offset in ACV FUNCTION greater than 2%.	AC Metering Circuit (See Paragraph 5-67.)
Meter pegs full scale on any AC range.	AC Metering Circuit, check A2CR3 and A2CR4 (See Paragraph 5-67.)

Artisan Technology Group - Quality Instrumentation ... Guaranteed | (888) 88-SOURCE | www.artisantg.com

5-60. POWER SUPPLY.

5-61. Check at A1 pin 7 for +6.4 to +7 volts and A1 pin 9 for -6.4 to -7 volts. If there is no output, check A1Q4 first. If the power supply has been overloaded, A1Q4 may be bad. Minimum battery voltage is 15.5 volts.

5-62. Measure the dc voltages at the check points given in Table 5-5. All measurements are made with reference to circuit ground.

Table 5-5. Power Supply Voltages

NOTE

The voltages listed in this table are nominal. A tolerance of ±10% should be allowed except for minimum voltages listed.

CHECK POINT	VOLTAGE
Emitter A1Q1	+15V (+8V min)
Collector A1Q1	+7.3V
Base A1Q1	+14.8V (7.8V min)
Emitter A1Q2	+6.7V (+6.4V min)
Collector A1Q2	+15V (8.6V min)
Emitter A1Q3	-0.5V
Collector A1Q3	-0.2V
Collector A1Q4	-6.7V (-6.4V min)
Base A1Q5	+0.5V
Across A1CR2	+6.2V

5-63. DC AMPLIFIER.

5-64. To make an operational check of the DC Amplifier, set the RANGE switch to 1 and the FUNCTION switch to +DCV. Connect a 1 volt source to the VOLTS and COM terminals and monitor the voltage at A1 pin 8. Since the DC Amplifier is a unity gain amplifier, the voltage should be +1.07 ±0.07 volts dc. If this reading is correct, the DC Amplifier is operating properly. If it is incorrect, proceed with the following troubleshooting procedures.

5-65. Check at the collector of A1Q9 for +3.5 Vdc, and check for +3.0 Vdc at A1TP1. If the voltage at the collector of A1Q9 is quite high (6 or 7 volts) and the voltage at A1TP1 is +3.0 Vdc, A1Q9 is probably open. If the collector voltage is low and the test point voltage is correct, A1Q8 is probably shorted. If both voltages are incorrect, A1Q7 or A1Q8 is probably bad.

5-66. If the collector voltage on A1Q9 is correct and the voltage at A1TP1 is slightly higher than normal, A1Q6 is probably bad.

NOTE

If A1Q6 is replaced and the meter remains pegged or indicates upscale and cannot be adjusted, check the value of factory selected component A1R19.* See Paragraph 5-71 and 5-73.

5-67. AC METERING CIRCUIT.

5-68. To check the AC Metering Circuit, set the RANGE to 0.01 and the FUNCTION to ACV. Connect a 10 mV rms source to the VOLTS and COM terminals and monitor the signal at A2 pin 0. The signal at A2 pin 0 should be 10.7 mV rms ±0.7 mV. If the measured signal is incorrect, the trouble is in either the DC Amplifier or the AC Post Attenuator.

5-69. Monitor the signal at the collector of A2Q3. The signal should be 0.28 V rms ±0.04 V. If the measured signal is correct, the AC Metering Circuit is functioning properly. If not, proceed with the following troubleshooting procedures.

5-70. Check for dc voltage levels listed in Table 5-6. If a given reading is wrong, the trouble is probably in that component or its associated circuit. If A2CR3 or A2CR4 are replaced and the zero offset in ACV FUNCTION is greater than 2%, check the value of factory selected component A2R14*. See Paragraph 5-72 and 5-77.

Table 5-6. AC Metering Circuit Voltages

NOTE

The voltages listed in this table are nominal. A tolerance of ±10% should be allowed.

CHECK POINT	VOLTAGE
A2TP1	+2.8 V
A2Q1 Collector	+2.8 V
A2Q2 Emitter	+2.2 V
A2Q3 Collector	-0.5 V

5-71. ADJUSTMENT OF FACTORY SELECTED COMPONENTS.

5-72. Certain components within the Model 427A are individually selected in order to compensate for slightly varying circuit parameters. These components are denoted by an asterisk (*) on the schematic, and the optimum or average value is shown. The following paragraphs describe the function of each factory selected component and give instructions for their selection. Normally these components do not need to be changed unless another associated component is changed. For example, replacement of a transistor may require the changing of an associated factory selected component.

5-73. A1R19*.

5-74. A1R19* adjusts the range of the AMP BAL resistor A1R15. If the AMP BAL A1R15 cannot be adjusted properly after replacing transistor A1Q6, A1R19* may need to be changed. Use the following steps to select A1R19*.

a. Set RANGE to 0.3.

b. Set DC ZERO/Ω∞ adjustment to center and A1R15 to its center.

Artisan Technology Group - Quality Instrumentation ... Guaranteed | (888) 88-SOURCE | www.artisantg.com

c. Select the FUNCTION (+DCV or -DCV) which will produce an upscale deflection.

d. If the FUNCTION selected is -DCV, increase the value of A1R19*; if +DCV is selected, decrease A1R19*. The value range of A1R19* is 0 to 1850Ω.

5-75. A2C2*.

5-76. A2C2* adjusts the range of the high frequency calibration capacitor A2C3 1 MC ADJ. If during the high frequency calibration (Paragraph 5-35) A2C3 cannot be adjusted for the proper reading, the value of A2C2* should be changed. If the reading is consistently high, change the value of A2C2* to 47 pF. If the reading is consistently low, remove A2C2*.

5-77. A2R14*.

5-78. A2R14* is factory selected to improve upscale meter tracking and correct any non-linearity of diodes A2CR3 and A2CR4. If diode A2CR3 or A2CR4 are replaced, A2R14* may need to be changed. Use the procedure outlined in the following paragraph to select A2R14*.

5-79. If a zero-offset greater than 2% (two minor divisions on the 0-1 scale) exists in ACV FUNCTION replace A2R14* with a smaller value of resistance. The correct value for A2R14* is the largest value of resistance that adjusts the zero-offset to less than 2%. Tracking error could result if the zero-offset indication is reduced below 1%. The nominal value for A2R14* is 91 ohms (-hp- Part No. 0683-9105). The recommended replacement value for A2R14* is either a 47 ohm (-hp- Part No. 0683-4705) or 68 ohm (-hp- Part No. 0683-6805) 1/4 W, 5% resistor.

5-80. A2R16*.

5-81. A2R16* adjusts the range of the low frequency Calibration Resistor A2R17 400 CPS ADJ. If the AC Metering Circuit is functioning properly and the 400 CPS ADJ cannot be adjusted for the proper indication, during low frequency calibration (Paragraph 5-34), A2R16* may need to be changed. If the reading is consistently low, change A2R16* to 56.2 ohms (-hp- Part No. 0757-0395).

5-82. ETCHED CIRCUIT BOARD REPAIR.

5-83. The Model 427A uses plated-through double-sided etched circuit boards. To prevent damage to the circuit board and components, observe the following rules when soldering:

a. Wear clean, lint free cotton or rubber gloves when handling the circuit boards. Avoid touching the board or components with bare fingers as skin oils can cause leakage paths.

b. Use a low-heat (25 to 50 watts) small-tip soldering iron, and a small diameter rosin core solder.

c. To remove a component, clip a heat sink (long nose pliers, commercial heat sink tweezers etc.) on the component lead as close to the component as possible. Place the soldering iron directly on the component lead and pull up on the lead. If a component is obviously damaged or faulty, clip the leads close to the components and then remove the leads from the board.

CAUTION

EXCESSIVE OR PROLONGED HEAT CAN LIFT THE CIRCUIT FOIL FROM THE BOARD OR CAUSE DAMAGE TO COMPONENTS.

d. Clean the component lead holes by heating the solder in the hole, quickly removing the soldering iron, and inserting a pointed, non-metallic object such as a toothpick.

e. To mount a new component, shape the leads and insert them in the holes. Clip a heat sink on the component, heat with the soldering iron, and add solder as necessary to obtain a good electrical connection.

f. Clip excess leads off after soldering and clean excess flux from the connection and adjoining area, using type TF Freon (-hp- Part No. 8500-0232).

Artisan Technology Group - Quality Instrumentation ... Guaranteed | (888) 88-SOURCE | www.artisantg.com

PERFORMANCE CHECK TEST CARD

Hewlett-Packard Model 427A
Voltmeter
Serial No. _____

Tests performed by _____
Date _____

DESCRIPTION	CHECK	
1. AC ACCURACY CHECK:	±2% of full scale	
2. FREQUENCY RESPONSE CHECK:	±2% 10 Hz to 1 MHz	
	10 Hz	
	100 Hz	
	1 kHz	
	10 kHz	
	100 kHz	
	500 kHz	
	1 MHz	
3. RESISTANCE ACCURACY CHECK.	±5% of reading at midscale	
	Range	Reading
	X10	
	X100	
	X1K	
	X10K	
	X100K	
	X1M	
	X10M	
4. DC ACCURACY CHECK:	±2% of full scale	
5. AC REJECTION CHECK:	100 times full scale input, < 1% change	
6. INPUT RESISTANCE CHECK:	10 MΩ all ranges	
7. INPUT CAPACITANCE CHECK:	40 pF .01 - 1 volt Range	
	20 pF 3 - 300 volt Range	

Artisan Technology Group - Quality Instrumentation ... Guaranteed | (888) 88-SOURCE | www.artisantg.com

SECTION VI
CIRCUIT DIAGRAMS

6-1. INTRODUCTION.

6-2. This section contains the schematic diagram of the Model 427A and the circuit diagrams. Figure 6-1 shows the layout of both the FUNCTION and RANGE switches. The switches are viewed from the bottom with the switches flattened out. The front of the instrument is at the bottom of the page.

6-3. Figure 6-2 shows the layout of the two circuit boards and the bottom view of the instrument. Figure 6-3 is the schematic diagram of the Model 427A.

REFERENCE DESIGNATIONS

PARTIAL REFERENCE DESIGNATIONS ARE SHOWN: PREFIX WITH ASSEMBLY OR SUBASSEMBLY DESIGNATION(S) OR BOTH FOR COMPLETE DESIGNATION.

ASSEMBLY	SUBASSEMBLY	COMPONENT	COMPLETE DESIGNATION
A2	NONE	Q1	A2Q1
A2	A1	R1	A2A1R1
NONE	NONE	J1	J1

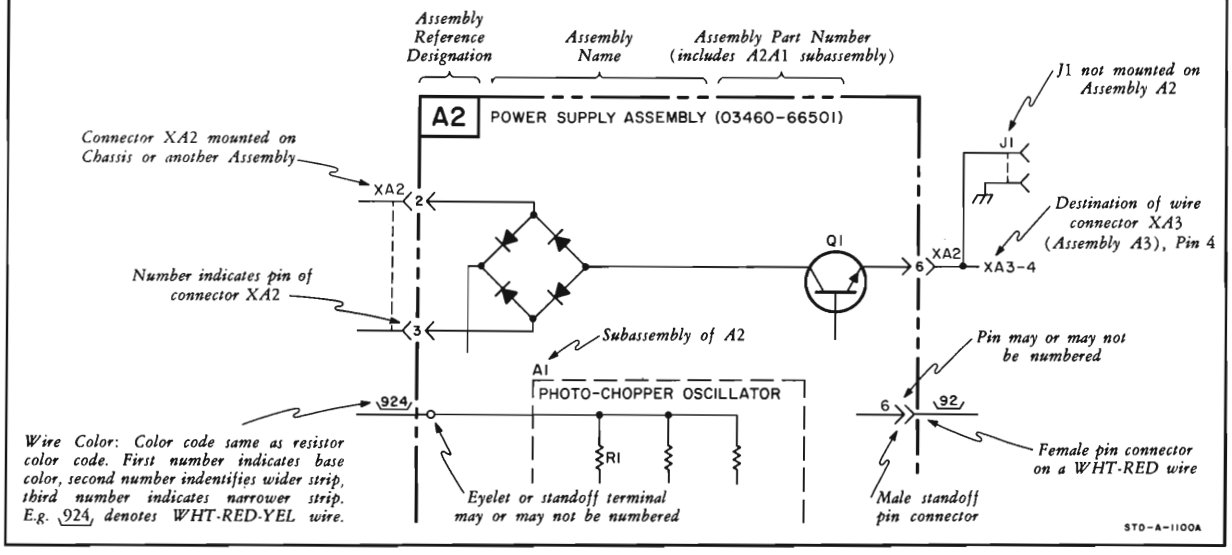

Artisan Technology Group - Quality Instrumentation ... Guaranteed | (888) 88-SOURCE | www.artisantg.com

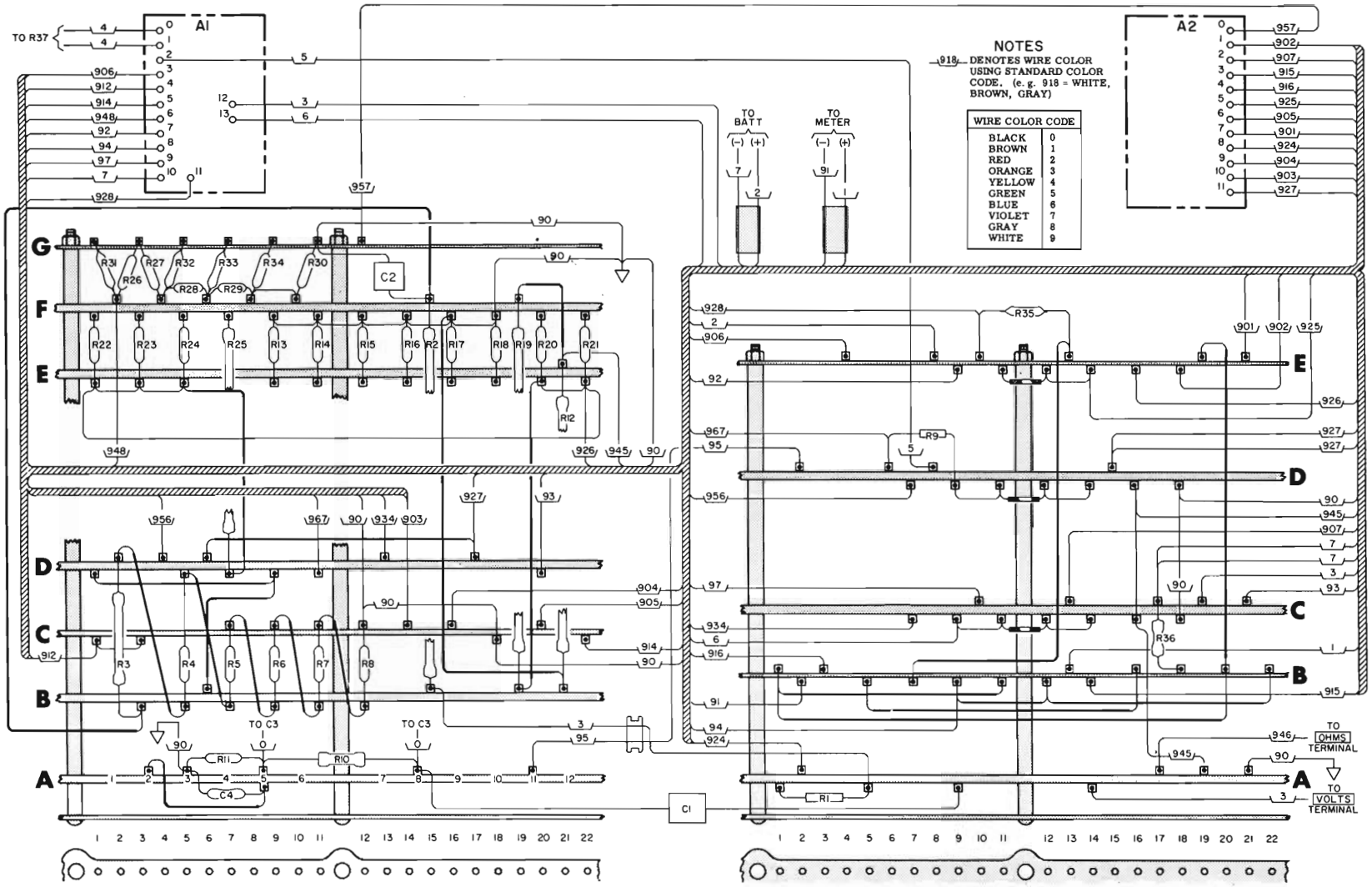

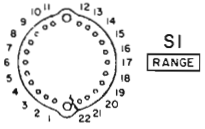

SWITCH WAFERS ARE VIEWED FROM BOTTOM FRONT OF INSTRUMENT.

S1A PIN NUMBERS DIFFER FROM OTHER WAFERS.

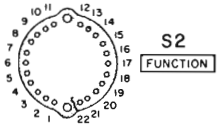

Figure 6-1. Location of Switch Components

Artisan Technology Group - Quality Instrumentation ... Guaranteed | (888) 88-SOURCE | www.artisantg.com

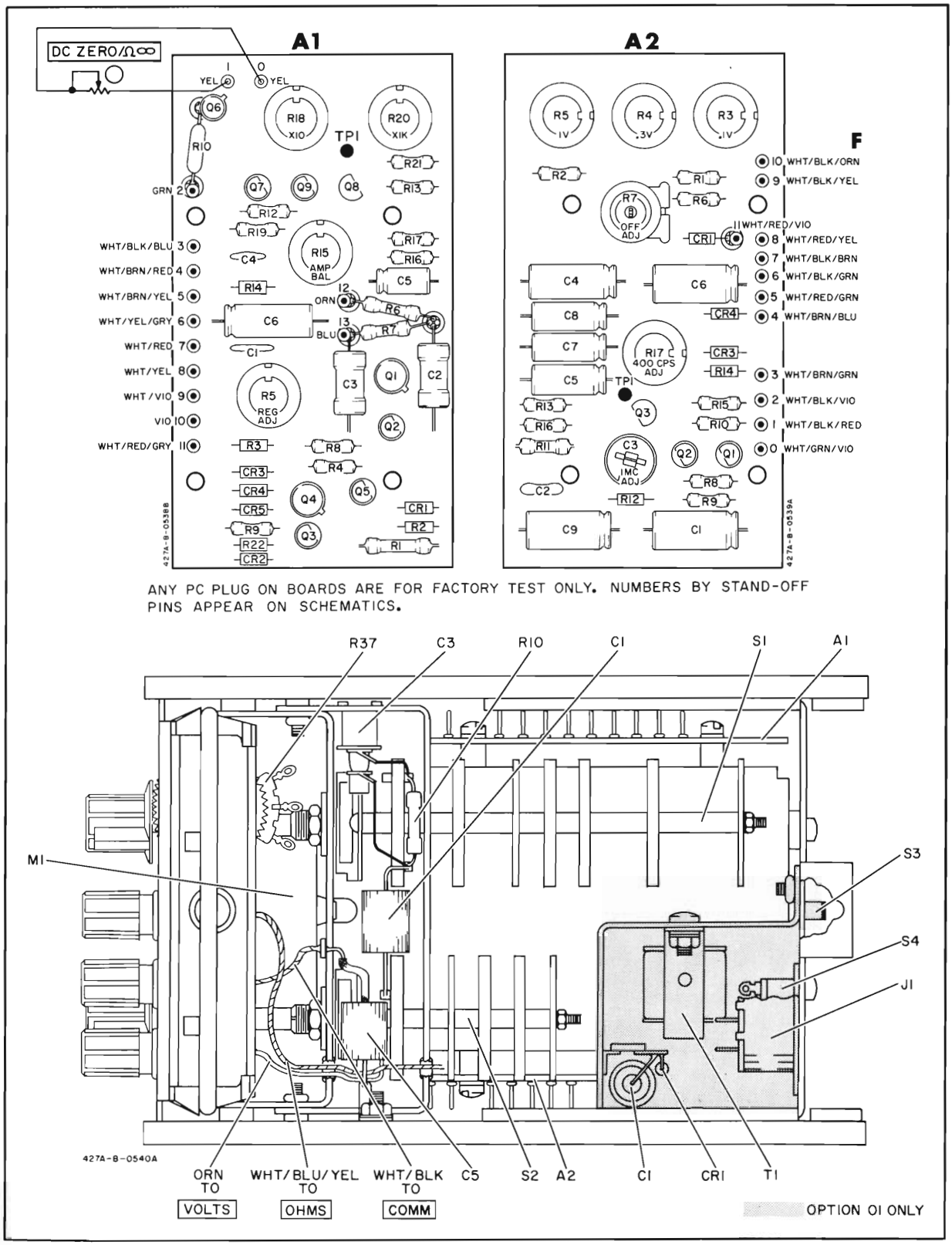

Figure 6-2. Component Location

Artisan Technology Group - Quality Instrumentation ... Guaranteed | (888) 88-SOURCE | www.artisantg.com

SCHEMATIC NOTES

1. PARTIAL REFERENCE DESIGNATIONS ARE SHOWN. PREFIX WITH ASSEMBLY OR SUBASSEMBLY DESIGNATION(S) OR BOTH FOR COMPLETE DESIGNATION.
2. COMPONENT VALUES ARE SHOWN AS FOLLOWS UNLESS OTHERWISE NOTED.
   RESISTANCE IN OHMS
   CAPACITANCE IN MICROFARADS
3. CONNECTED TO "A" IN OPTION 01 INSTRUMENT; CONNECTED TO "B" IN STANDARD INSTRUMENT.
4. DENOTES ASSEMBLY.
   DENOTES OPTION 01.
   DENOTES MAIN SIGNAL PATH.
   DENOTES DC FEEDBACK PATH.
   DENOTES AC FEEDBACK PATH.
5. DENOTES POWER LINE GROUND; VOLTMETER CHASSIS.
   DENOTES SIGNAL GROUND; CIRCUIT GROUND.
6. DENOTES FRONT PANEL MARKING.
   DENOTES REAR PANEL MARKING.
7. DENOTES SCREWDRIVER ADJUST.
8. * AVERAGE VALUE SHOWN, OPTIMUM VALUE SELECTED AT FACTORY.
9. DENOTES COMPONENTS NOT MOUNTED ON ASSEMBLY.
10. 924 DENOTES WIRE COLOR: COLOR CODE SAME AS RESISTOR COLOR CODE. FIRST NUMBER IDENTIFIES BASE COLOR, SECOND NUMBER IDENTIFIES WIDER STRIP, THIRD NUMBER IDENTIFIES NARROWER STRIP. (e. g. 924 = WHITE, RED, YELLOW.)

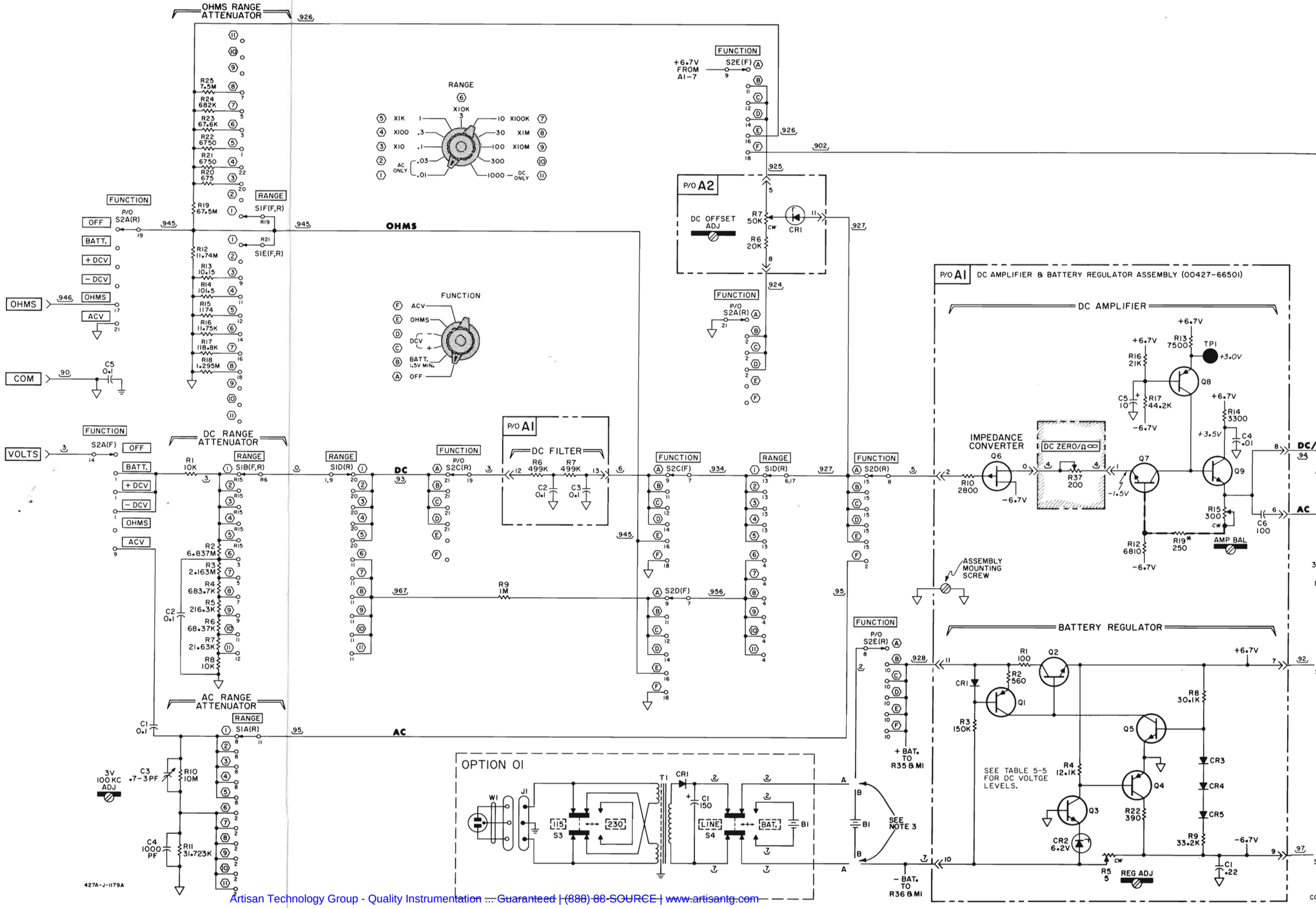

Artisan Technology Group - Quality Instrumentation ... Guaranteed | (888) 88-SOURCE | www.artisantg.com

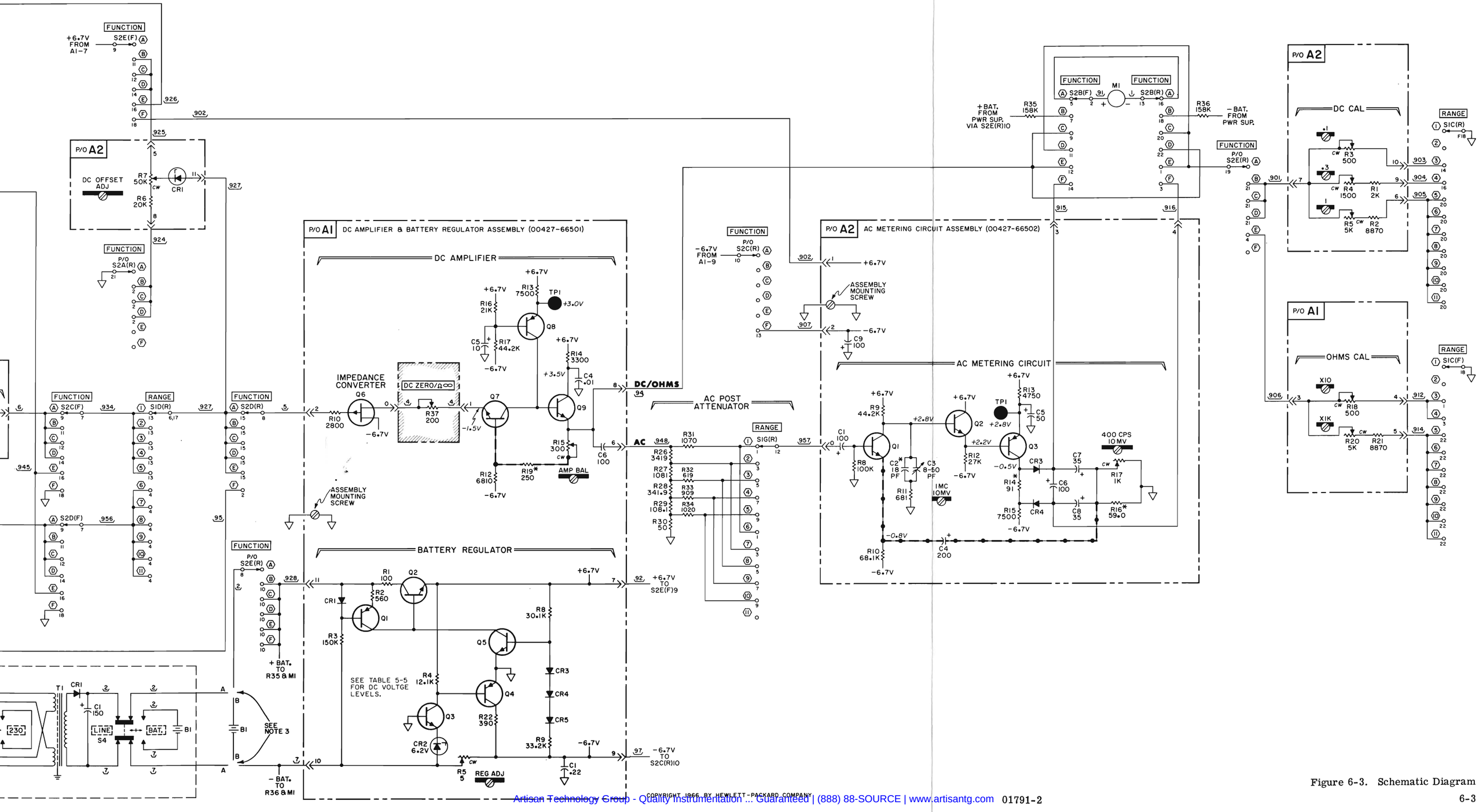

COPYRIGHT 1966 BY HEWLETT-PACKARD COMPANY

Artisan Technology Group - Quality Instrumentation ... Guaranteed | (888) 88-SOURCE | www.artisantg.com

01791-2

Figure 6-3. Schematic Diagram

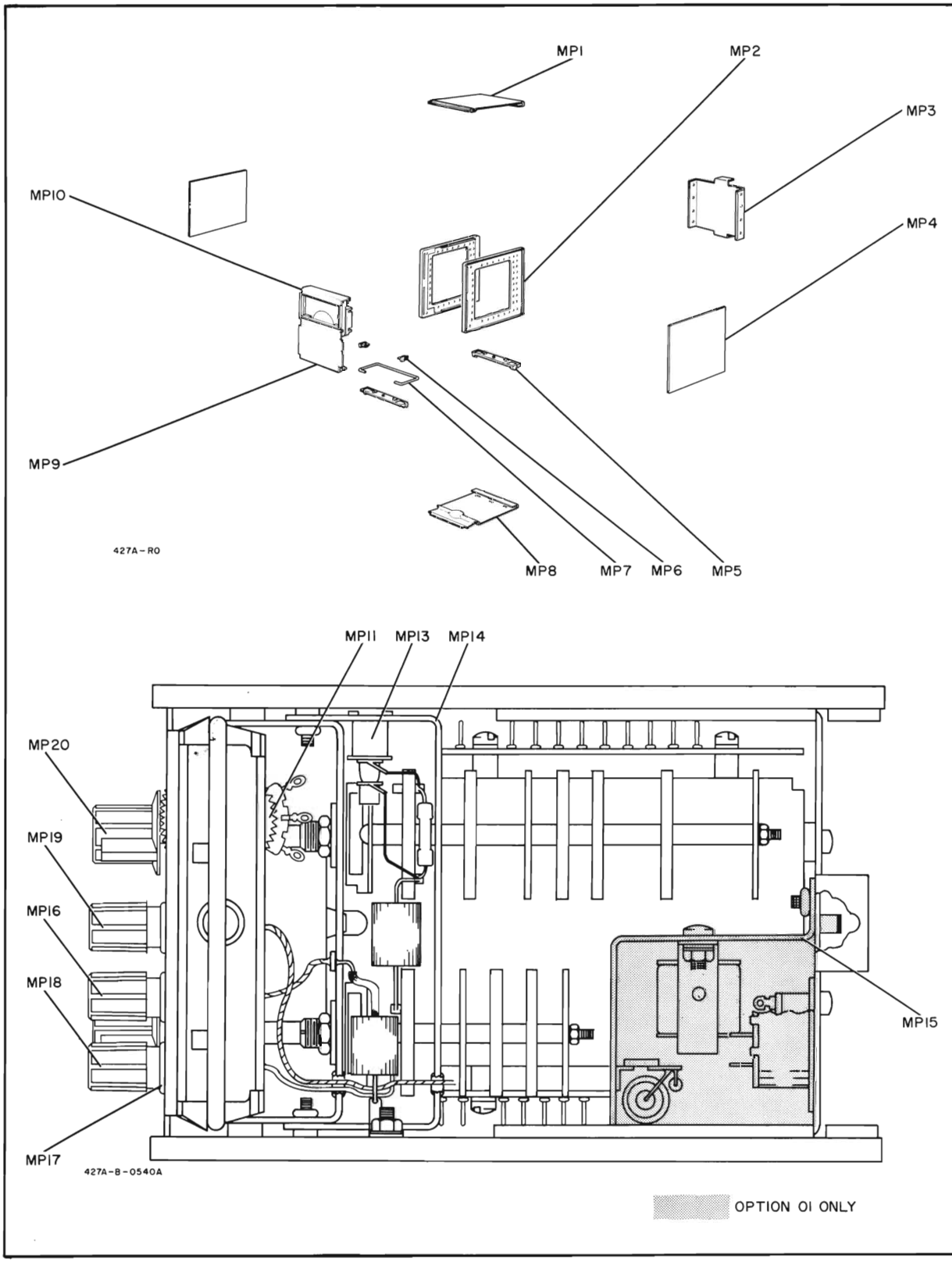

Figure 7-1. Location of Mechanical Parts

Artisan Technology Group - Quality Instrumentation ... Guaranteed | (888) 88-SOURCE | www.artisantg.com

SECTION VII
REPLACEABLE PARTS

7-1. INTRODUCTION.

7-2. This section contains information for ordering replacement parts. Table 7-1 lists parts in alphameric order of their reference designators and indicates the description, -hp- part number of each part, together with any applicable notes, and provides the following:

a. Total quantity used in the instrument (TQ) column).

b. Description of the part. (See list of abbreviations below.)

c. Typical manufacturer of the part in a five-digit code. (See Appendix A for list of manufacturers.)

d. Manufacturer's part number.

7-3. Miscellaneous parts are listed at the end of Table 7-1. Each factory selected component is keyed to paragraph describing the selection of the component value.

7-4. ORDERING INFORMATION.

7-5. To obtain replacement parts, address order or inquiry to your local Hewlett-Packard Field Office. (See Appendix B for list of office locations.) Identify parts by their Hewlett-Packard part numbers.

7-6. NON-LISTED PARTS.

7-7. To obtain a part that is not listed, include:

a. Instrument model number.

b. Instrument serial number.

c. Description of the part.

d. Function and location of the part.

DESIGNATORS

A	= assembly
B	= motor
BT	= battery
C	= capacitor
CR	= diode
DL	= delay line
DS	= lamp
E	= misc electronic part
F	= fuse
FL	= filter
HR	= heater
IC	= integrated circuit
J	= jack
K	= relay
L	= inductor
M	= meter
MP	= mechanical part
P	= plug
Q	= transistor
QCR	= transistor-diode
R	= resistor
RT	= thermistor
S	= switch
T	= transformer
TC	= thermocouple
V	= vacuum tube, neon bulb, photocell, etc.
W	= cable
X	= socket
XDS	= lampholder
XF	= fuseholder
Z	= network

ABBREVIATIONS

Ag	= silver
Al	= aluminum
A	= ampere (s)
Au	= gold
C	= capacitor
cer	= ceramic
coef	= coefficient
com	= common
comp	= composition
conn	= connection
dep	= deposited
DPDT	= double-pole double-throw
DPST	= double-pole single-throw
elect	= electrolytic
encap	= encapsulated
F	= farad (s)
FET	= field effect transistor
fxd	= fixed
GaAs	= gallium arsenide
GHz	= gigahertz = 10^{+9} hertz
gd	= guard (ed)
Ge	= germanium
grd	= ground (ed)
H	= henry (ies)
Hg	= mercury
Hz	= hertz (cycle (s) per second)
ID	= inside diameter
impg	= impregnated
incd	= incandescent
ins	= insulation (ed)
kΩ	= kilohm (s) = 10^{+3} ohms
kHz	= kilohertz = 10^{+3} hertz
L	= inductor
lin	= linear taper
log	= logarithmic taper
m	= milli = 10^{-3}
mA	= milliampere (s) = 10^{-3} amperes
MHz	= megahertz = 10^{+6} hertz
MΩ	= megohm-(s) = 10^{+6} ohms
met flm	= metal film
mfr	= manufacturer
mtg	= mounting
mV	= millivolt (s) = 10^{-3} volts
μ	= micro = 10^{-6}
μV	= microvolt (s) = 10^{-6} volts
my	= Mylar ®
nA	= nanoampere (s) = 10^{-9} amperes
NC	= normally closed
Ne	= neon
NO	= normally open
NPO	= negative positive zero (zero temperature coefficient)
ns	= nanosecond (s) = 10^{-9} seconds
nsr	= not separately replaceable
Ω	= ohm (s)
obd	= order by description
OD	= outside diameter
p	= peak
pc	= printed circuit
pF	= picofarad (s) = 10^{-12} farads
piv	= peak inverse voltage
p/o	= part of
pos	= position (s)
poly	= polystyrene
pot	= potentiometer
p-p	= peak-to-peak
ppm	= parts per million
prec	= precision (temperature coefficient, long term stability, and/or tolerance)
R	= resistor
Rh	= rhodium
rms	= root-mean-square
rot	= rotary
Se	= selenium
sect	= section (s)
Si	= silicon
sl	= slide
SPDT	= single-pole double-throw
SPST	= single-pole single-throw
Ta	= tantalum
TC	= temperature coefficient
TiO_2	= titanium dioxide
tog	= toggle
tol	= tolerance
trim	= trimmer
TSTR	= transistor
V	= volt (s)
vacw	= alternating current working voltage
var	= variable
vdcw	= direct current working voltage
W	= watt (s)
w/	= with
wiv	= working inverse voltage
w/o	= without
ww	= wirewound
*	= optimum value selected at factory, average value shown (part may be omitted)
**	= no standard type number assigned (selected or special type)

REV 6

® Dupont de Nemours

Artisan Technology Group - Quality Instrumentation ... Guaranteed | (888) 88-SOURCE | www.artisantg.com

Table 7-1 Replaceable Parts (Cont'd)

REFERENCE DESIGNATOR	-hp- PART NO.		TQ	DESCRIPTION	MFR.	MFR. PART NO.
A1	00427-66501		1	Assembly: board DC Amplifier includes C1 thru C6 Q1 thru Q9 CR1 thru CR5 R1 thru R21	-hp-	
A1C1	0160-0170		1	C: fxd cer 0.22 μF +80% -20% 25 vdcw	56289	5C9A obd
A1C2, A1C3	0160-0168		2	C: fxd 0.1 μF ±10% 200 vdcw	56289	192P10492
A1C4	0150-0093		1	C: fxd 0.01 μF +80% -20% 100 vdcw	91418	TA obd
A1C5	0180-0224		1	C: fxd Al elect 10 μF +75% -10% 15 vdcw	56289	30D106G015BA4
A1C6	0180-1800		1	C: fxd Al elect 100 μF +100% -10% 6 vdcw	56289	Non-polar 30D type obd
A1CR1	1901-0025		1	Diode: Si 100 mA at +1V 100 piv 12 pF	-hp-	
A1CR2	1902-0568		1	Diode: breakdown 6.2 V ±5%	12954	DZ50801U
A1CR3 thru A1CR5	1910-0022		5	Diode: Ge HD1872	03877	obd
A1Q1	1850-0111		2	TSTR: Ge PNP 2N404A	01295	2N404A
A1Q2	1854-0087		1	TSTR: Si NPN 2N3417	24446	2N3417
A1Q3	1854-0033		2	TSTR: Si NPN 2N3391	24446	2N3391
A1Q4	1850-0111			TSTR: Ge PNP 2N404A	01295	2N404A
A1Q5	1854-0033			TSTR: Si NPN 2N3391	24446	2N3391
A1Q6	1855-0023		1	TSTR: FET SU527	17856	SU527
A1Q7	1854-0057		4	TSTR: Si 2N3855A	24446	2N3855A
A1Q8	1853-0036		2	TSTR: Si PNP 2N3906	07263	obd
A1Q9	1854-0057			TSTR: Si 2N3855A	24446	2N3855A
A1R1	0757-0198		1	R: fxd prec met flm 100 ohms ±1% 1/2 W	75042	CEC T-O obd
A1R2	0684-5611		1	R: fxd comp 560 ohms ±10% 1/4 W	01121	CB5611
A1R3	0684-1541		1	R: fxd comp 150K ±10% 1/4 W	01121	CB1541
A1R4	0757-0444		1	R: fxd prec met flm 12.1K ±1% 1/8 W	75042	CEA T-O obd
A1R5	2100-1735		1	R: var ww 5 ohms ±10% 1-1/2 W	11236	110 obd
A1R6, A1R7	0698-4972		2	R: fxd prec met flm 499K ±1% 1/2 W	75042	CEC T-O obd
A1R8	0757-0453		1	R: fxd prec met flm 30.1K ±1% 1/8 W	75042	CEC T-O obd
A1R9	0757-0454		1	R: fxd prec met flm 33.2K ±1% 1/8 W	75042	CEA T-O obd
A1R10	0698-4199		1	R: fxd prec met flm 2800 ohms ±1% 1/4 W	19701	MF6C T-O obd
A1R11				Not assigned		
A1R12	0757-0439		1	R: fxd prec met flm 6810 ohms ±1% 1/8 W	75042	CEA T-O obd
A1R13	0757-0440		2	R: fxd prec met flm 7500 ohms ±1% 1/8 W	75042	CEA T-O obd
A1R14	0684-3321		1	R: fxd comp 3300 ohms ±10% 1/4 W	01121	CB3321
A1R15	2100-0394		1	R: var ww 300 ohms ±20% 1-1/2 W	71450	110 obd
A1R16	0698-4205		1	R: fxd prec met flm 21K ±1% 1/8 W	75042	CEA T-O obd
A1R17	0698-4207		1	R: fxd prec met flm 44.2K ±1% 1/8 W	75042	CEA T-O obd
A1R18	2100-0328		2	R: var ww 500 ohms ±10% 1-1/2 W	71450	110 obd
A1R19*	0757-0408		1	R: fxd prec met flm 250 ohms ±1% 1/8 W (See Paragraph 5-73)	75042	CEA T-O obd
A1R20	2100-0205		2	R: var ww 5000 ohms ±10% 1-1/2 W	-hp-	
A1R21	0698-4202		1	R: fxd prec met flm 8870 ohms ±1% 1/8 W	75042	CEA T-O obd
A1R22	0684-3911		1	R: fxd comp 390 ohms ±10% 1/4 W	01121	CB3911
A2	00427-66502		1	Assembly: board AC Metering Circuit includes C1 thru C9 Q1 thru Q3 CR1 thru CR4 R1 thru R17	-hp-	
A2C1	0180-0039		3	C: fxd elect 100 μF 12 vdcw	56289	30D107G012DC4M1
A2C2*	0160-0356		1	C: fxd mica 18 pF ±5% 300 vdcw (See Paragraph 5-75)	04062	obd
A2C3	0130-0017		1	C: var cer 8-50 pF	72982	557-019-U2PO-34R
A2C4	0180-0060		1	C: fxd elect 200 μF +100% -10% 3 vdcw	56289	30D207G003DC4
A2C5	0180-0033		1	C: fxd elect 50 μF +100% -10% 6 vdcw	56289	30D506G006CB4M1
A2C6	0180-0039			C: fxd elect 100 μF 12 vdcw	56289	30D107G012DC4M1

Artisan Technology Group - Quality Instrumentation ... Guaranteed | (888) 88-SOURCE | www.artisantg.com

Table 7-1. Replaceable Parts (Cont'd)

REFERENCE DESIGNATOR	-hp- PART NO.		TQ	DESCRIPTION	MFR.	MFR. PART NO.
A2C7, A2C8	0180-0064		2	C: fxd elect 35 μF +100% -10% 6 vdcw	56289	30D356G006BB4
A2C9	0180-0039			C: fxd elect 100 μF 12 vdcw	56289	30D107G012DC4M1
A2CR1	1902-0571		1	Diode: zener 14 V	04713	SZ10939-224
A2CR2				Not assigned		
A2CR3, A2CR4	1910-0022			Diode: Ge HD1872	03877	obd
A2Q1, A2Q2	1854-0057			TSTR: Si 2N3855A	24446	2N3855A
A2Q3	1853-0023			TSTR: Si NPN 2N3703	01295	obd
A2R1	0757-0283		1	R: fxd prec met flm 2000 ohms ±1% 1/8 W	75042	CEA T-O obd
A2R2	0698-4202		1	R: fxd prec met flm 8870 ohms ±1% 1/8 W	75042	CEA T-O obd
A2R3	2100-0328			R: var ww 500 ohms ±10% 1-1/2 W	71450	110 obd
A2R4	2100-0291		1	R: var ww 1500 ohms ±20% 1-1/2 W	71450	110 obd
A2R5	2100-0205			R: var prec ww 5000 ohms ±10% 1-1/2 W	-hp-	
A2R6	0757-0449		1	R: fxd prec met flm 20K ±1% 1/8 W	75042	CEA T-O obd
A2R7	2100-0094		1	R: var pot comp lin 50K ±30% 1/10 W	71450	UPE 70RE -hp- obd
A2R8	0757-0465		1	R: fxd prec met flm 100K ±1% 1/8 W	75042	CEA T-O obd
A2R9	0698-4207		1	R: fxd prec met flm 44.2K ±1% 1/8 W	75042	CEA T-O obd
A2R10	0757-0461		1	R: fxd prec met flm 68.1K ±1% 1/8 W	75042	CEA T-O obd
A2R11	0757-0419		1	R: fxd prec met flm 681 ohms ±1% 1/8 W	75042	CEA T-O obd
A2R12	0684-2731		1	R: fxd comp 27K ±10% 1/4 W	01121	CB2731
A2R13	0757-0437		1	R: fxd prec met flm 4750 ohms ±1% 1/8 W	75042	CEA T-O obd
A2R14*	0683-9105		1	R: fxd comp 91 ohms ±5% 1/4 W (See Paragraph 5-77)	01121	CB9105
A2R15	0757-0440			R: fxd prec met flm 7500 ohms ±1% 1/8 W	75042	CEA T-O obd
A2R16*	0698-4386		1	R: fxd prec met flm 59.0 ohms ±1% 1/8 W (See Paragraph 5-80)	75042	CEA T-O obd
A2R17	2100-3212		1	R: var 200 ohms ±10% Type H1	73138	72PR200
B1	1420-0030		1	Battery: 22-1/2 V dry cell	83740	No. 763 obd
C1, C2	0170-0022		3	C: fxd my 0.1 μF ±20% 600 vdcw	84411	HEW-27 obd
C3	0132-0003		1	C: var trimmer 0.7 to 3 pF	72982	535-016-4R
C4	0140-0152		1	C: fxd mica 1000 pF ±5% 300 vdcw	04062	DM16F102J
C5	0170-0022			C: fxd my 0.1 μF ±20% 600 vdcw	000LH	HEW-17 obd
J1				See Option 01		
J2				See MP16 and MP18		
M1	1120-0903		1	Meter: 100 μA	-hp-	
R1	0684-1031		1	R: fxd comp 10K ±10% 1/4 W	01121	CB1031
R2	0698-4217		1	R: fxd prec carbon flm 6.837 meg ±1% 2 W	91637	DC2 obd
R3	0730-0113		1	R: fxd prec carbon flm 2.163 meg ±1% 1 W	91637	DC1 obd
R4	0698-4214		1	R: fxd prec met flm 683.7K ±0.5% 1/4 W	75042	CEB T-O obd
R5	0698-4212		1	R: fxd prec met flm 216.3K ±0.5% 1/4 W	75042	CEB T-O obd
R6	0698-4209		1	R: fxd prec met flm 68.37K ±0.5% 1/4 W	75042	CEB T-O obd
R7	0698-4206		1	R: fxd prec met flm 21.63K ±0.5% 1/4 W	75042	CEB T-O obd
R8	0698-4203		1	R: fxd prec met flm 10K ±0.5% 1/4 W	75042	CEB T-O obd
R9	0684-1051		1	R: fxd comp 1 meg ±10% 1/4 W	01121	CB1051
R10	0698-4128		1	R: fxd prec met flm 10 meg ±0.25% 1/2 W	03888	PME 70 obd
R11	0698-4129		1	R: fxd prec met flm 31.723K ±0.1% 1/4 W	75042	CEB T-3 obd
R12	0698-4219		1	R: fxd prec carbon flm 11.74 meg ±1% 1 W	91637	DC1 obd
R13	0698-4189		1	R: fxd prec met flm 10.15 ohms ±1% 1/4W	19701	MF6C T-O obd
R14	0698-4191		1	R: fxd prec met flm 101.5 ohms ±1% 1/4W	19701	MF5C T-O obd
R15	0698-4198		1	R: fxd prec met flm 1174 ohms ±1% 1/4 W	19701	MF6C T-O obd
R16	0698-4204		1	R: fxd prec met flm 11.75K ±1% 1/4 W	19701	MF6C T-O obd
R17	0698-4210		1	R: fxd prec met flm 118.8K ±1% 1/4 W	19701	MF6C T-O obd
R18	0757-0872		1	R: fxd prec met flm 1.30 meg ±1% 1/2W	01738	MFF-1/2-10, T-1

Artisan Technology Group - Quality Instrumentation ... Guaranteed | (888) 88-SOURCE | www.artisantg.com

Table 7-1. Replaceable Parts (Cont'd)

REFERENCE DESIGNATOR	-hp- PART NO.		TQ	DESCRIPTION	MFR.	MFR. PART NO.	
R19	0698-4220		1	R: fxd prec carbon flm 67.5 meg ±1% 2 W	91637	DC2	obd
R20	0698-4194		1	R: fxd prec met flm 675 ohms ±0.5% 1/4 W	75042	CEB T-O	obd
R21, R22				Not assigned			
R23	0698-4208		1	R: fxd prec met flm 67.6K ±0.5% 1/4 W	75042	CEB T-O	obd
R24	0698-4213		1	R: fxd prec met flm 682K ±0.5% 1/4 W	75042	CEB T-O	obd
R25	0730-0131		1	R: fxd prec carbon flm 7.5 meg ±1% 1 W	91637	DC-1	obd
R26	0698-4200		1	R: fxd prec met flm 3419 ohms ±0.25% 1/8 W	75042	CEA T-O	obd
R27	0698-4197		1	R: fxd prec met flm 1081 ohms ±0.25% 1/8 W	75042	CEA T-O	obd
R28	0698-4193		1	R: fxd prec met flm 341.9 ohms ±0.25% 1/8W	75042	CEA T-O	obd
R29	0698-4192		1	R: fxd prec met flm 108.1 ohms ±0.25% 1/8W	75042	CEA T-O	obd
R30	0698-4190		1	R: fxd prec met flm 50 ohms ±0.25% 1/8 W	75042	CEA T-O	obd
R31	0698-4196		1	R: fxd prec met flm 1070 ohms ±1% 1/8 W	75042	CEA T-O	obd
R32	0757-0418		1	R: fxd prec met flm 619 ohms ±1% 1/8 W	75042	CEA T-O	obd
R33	0757-0422		1	R: fxd prec met flm 909 ohms ±1% 1/8 W	75042	CEA T-O	obd
R34	0698-4195		1	R: fxd prec met flm 1020 ohms ±1% 1/8 W	75042	CEA T-O	obd
R35, R36	0698-4211		2	R: fxd prec met flm 158K ±1% 1/8 W	75042	CEA T-O	obd
R37	2100-1990		1	R: var ww 200 ohms ±20% DC ZERO/Ω∞	71450	Type 118	obd
S1	00427-61902		1	Switch: RANGE	-hp-		
S2	00427-61901		1	Switch: FUNCTION	-hp-		
	00427-69501			Conversion Kit (to Option 01)	-hp-		
				OPTION 01			
C1	0180-1802		1	C: fxd Al elect 150 μF +100% -10% 40 vdcw	56289	obd	
CR1	1901-0025		1	Diode: Si 100 mA at +1 V 100 piv 12 pF	-hp-		
J1	1251-2357		1	Connector: ac power cord receptacle	82389	AC-3	obd
S3	3101-1234		1	Switch: slide DPDT 115/230	42190	4633	obd
S4	3101-0011		1	Switch: slide DPDT LINE/BATT	42190	4603	obd
T1	9100-1328		1	Transformer: ac power	-hp-		
W1	8120-1348		1	Power cord	70903	KH-7041	
				MECHANICAL PARTS			
				SEE FIGURE 7-1			
MP1	5060-5972		1	Cover: top (with handle)	-hp-		
MP2	5060-0702		2	Assembly: frame 6 x 8 sm	-hp-		
MP3	00427-00205		1	Panel: rear (Option 01 only)	-hp-		
MP3	00427-00202		1	Panel: rear	-hp-		
MP4	5000-8563		2	Cover: side 6 x 8 sm	-hp-		
MP5	5060-0727		2	Assembly: foot third module	-hp-		
MP6	5040-0700		2	Hinge	-hp-		
MP7	1490-0031		1	Stand: tilt third module stainless steel rod	91260	obd	
MP8	5000-8569		1	Cover: bottom 5 x 8 sm	-hp-		
MP9	00427-00206		1	Panel: front	-hp-		
MP10	5020-6852		1	Meter trim: third module	-hp-		
MP11	0370-0311		1	Thumbwheel: DC ZERO/Ω∞	-hp-		
MP12				Not assigned			
MP13	1750A-64A		1	Holder: trimmer capacitor (used with C3)	-hp-		
MP14	00427-00601		1	Shield: switch	-hp-		

Artisan Technology Group - Quality Instrumentation ... Guaranteed | (888) 88-SOURCE | www.artisantg.com

Table 7-1. Replaceable Parts (Cont'd)

REFERENCE DESIGNATOR	-hp- PART NO.		TQ	DESCRIPTION	MFR.	MFR. PART NO.
MP15	00427-05501		1	Shield: can (Option 01 only)	-hp-	
MP16	1510-0009		1	Assembly: binding post black COM w/o solder turret brass, P/O J2	-hp-	
MP17	0340-0099		3	Insulator: binding post single grey plastic 0.500" OD x 0.200" ID x 0.090" thick with anti-rotation boss, P/O J2	-hp-	
MP18	1510-0008		1	Assembly: binding post VOLTS red w/o solder turret brass, P/O J2	-hp-	
MP19	1510-0037		1	Assembly: binding post OHMS blue w/o solder turret brass, P/O J2	-hp-	
MP20	0370-0077		2	Knob: skirted bar 5/8" diameter black for 1/4" diameter shaft	-hp-	
MP21	00427-06401		1	Holder: battery	-hp-	
MP22	00427-90005		1	Manual: operating and service	-hp-	

Artisan Technology Group - Quality Instrumentation ... Guaranteed | (888) 88-SOURCE | www.artisantg.com

CODE LIST OF MANUFACTURERS

The following code numbers are from the Federal Supply Code for Manufacturers Cataloging Handbooks H4-1 (Name to Code) and H4-2 (Code to Name) and their latest supplements. The date of revision and the date of the supplements used appear at the bottom of each page. Alphabetical codes have been arbitrarily assigned to suppliers not appearing in the H4 Handbooks.

Code No.	Manufacturer	Address
00000	U.S.A. Common	Any supplier of U.S.
00136	McCoy Electronics	Mount Holly Springs, Pa.
00213	Sage Electronics Corp.	Rochester, N.Y.
00287	Cemco Inc.	Danielson, Conn.
00334	Humidial	Colton, Calif.
00348	Microtron Co., Inc.	Valley Stream, N.Y.
00373	Garlock Inc.	Cherry Hill, N.J.
00656	Aerovox Corp.	New Bedford, Mass.
00779	Amp. Inc.	Harrisburg, Pa.
00781	Aircraft Radio Corp.	Boonton, N.J.
00809	Croven Ltd.	Whitby, Ontario Canada
00815	Northern Engineering Laboratories, Inc.	Burlington, Wis.
00853	Sangamo Electric Co., Pickens Div.	Pickens, S.C.
00866	Goe Engineering Co.	City of Industry, Cal.
00891	Carl E. Holmes Corp.	Los Angeles, Calif.
00929	Microlab Inc.	Livingston, N.J.
01002	General Electric Co., Capacitor Dept.	Hudson Falls, N.Y.
01009	Alden Products Co.	Brockton, Mass.
01121	Allen Bradley Co.	Milwaukee, Wis.
01255	Litton Industries, Inc.	Beverly Hills, Calif.
01281	TRW Semiconductors, Inc.	Lawndale, Calif.
01295	Texas Instruments, Inc., Transistor Products Div.	Dallas, Texas
01349	The Alliance Mfg. Co.	Alliance, Ohio
01538	Small Parts Inc.	Los Angeles, Calif.
01589	Pacific Relays, Inc.	Van Nuys, Calif.
01670	Gudebrod Bros. Silk Co.	New York, N.Y.
01930	Amerock Corp.	Rockford, Ill.
01961	Pulse Engineering Co.	Santa Clara, Calif.
02114	Ferroxcube Corp. of America	Saugerties, N.Y.
02116	Wheelock Signals, Inc.	Long Branch, N.J.
02286	Cole Rubber and Plastics Inc.	Sunnyvale, Calif.
02660	Amphenol-Borg Electronics Corp.	Broadview, Ill.
02735	Radio Corp. of America, Semiconductor and Materials Div.	Somerville, N.J.
02771	Vocaline Co. of America, Inc.	Old Saybrook, Conn.
02777	Hopkins Engineering Co.	San Fernando, Calif.
02875	Hudson Tool & Die Co.	Newark, N.J.
03508	G.E. Semiconductor Prod. Dept.	Syracuse, N.Y.
03705	Apex Machine & Tool Co.	Dayton, Ohio
03797	Eldema Corp.	Compton, Calif.
03818	Parker Seal Co.	Los Angeles, Calif.
03877	Transitron Electric Corp.	Wakefield, Mass.
03888	Pyrofilm Resistor Co., Inc.	Cedar Knolls, N.J.
03954	Singer Co., Diehl Div. Finderne Plant	Sumerville, N.J.
04009	Arrow, Hart and Hegeman Elect. Co.	Hartford, Conn.
04013	Taurus Corp.	Lambertville, N.J.
04062	Arco Electronic Inc.	Great Neck, N.Y.
04217	Essex Wire	Los Angeles, Calif.
04222	Hi-Q Division of Aerovox	Myrtle Beach, S.C.
04354	Precision Paper Tube Co.	Wheeling, Ill.
04404	Dymec Division of Hewlett-Packard Co.	Palo Alto, Calif.
04651	Sylvania Electric Products, Microwave Device Div.	Mountain View, Calif.
04673	Dakota Engr. Inc.	Culver City, Calif.
04713	Motorola, Inc., Semiconductor Prod. Div.	Phoenix, Arizona
04732	Filtron Co., Inc. Western Div.	Culver City, Calif.
04773	Automatic Electric Co.	Northlake, Ill.
04796	Sequoia Wire Co.	Redwood City, Calif.
04811	Precision Coil Spring Co.	El Monte, Calif.
04870	P.M. Motor Company	Westchester, Ill.
04919	Component Mfg. Service Co.	W. Bridgewater, Mass.
05006	Twentieth Century Plastics, Inc.	Los Angeles, Calif.
05245	Components Corp.	Chicago, Ill.
05277	Westinghouse Electric Corp. Semi-Conductor Dept.	Youngwood, Pa.
05347	Ultronix, Inc.	San Mateo, Calif.
05397	Union Carbide Corp., Elect. Div.	New York, N.Y.
05574	Viking Ind. Inc.	Canoga Park, Calif.
05593	Icore Electro-Plastics Inc.	Sunnyvale, Calif.
05616	Cosmo Plastic (c/o Electrical Spec. Co.)	Cleveland, Ohio
05624	Barber Colman Co.	Rockford, Ill.
05728	Tiffen Optical Co.	Roslyn Heights, Long Island, N.Y.
05729	Metro-Tel Corp.	Westbury, N.Y.
05783	Stewart Engineering Co.	Santa Cruz, Calif.
05820	Wakefield Engineering Inc.	Wakefield, Mass.
06004	Bassick Co., Div. of Stewart Warner Corp.	Bridgeport, Conn.
06090	Raychem Corp.	Redwood City, Calif.
06175	Bausch and Lomb Optical Co.	Rochester, N.Y.
06402	E.T.A. Products Co. of America	Chicago, Ill.
06540	Amatom Electronic Hardware Co., Inc.	New Rochelle, N.Y.
06555	Beede Electrical Instrument Co., Inc.	Penacook, N.H.
06666	General Devices Co., Inc.	Indianapolis, Ind.
06751	Components Inc., Ariz. Div.	Phoenix, Ariz.
06812	Torrington Mfg. Co., West Div.	Van Nuys, Calif.
06980	Varian Assoc. Eimac Div.	San Carlos, Calif.
07088	Kelvin Electric Co.	Van Nuys, Calif.
07126	Digitran Co.	Pasadena, Calif.
07137	Transistor Electronics Corp.	Minneapolis, Minn.
07138	Westinghouse Electric Corp. Electronic Tube Div.	Elmira, N.Y.
07149	Filmohm Corp.	New York, N.Y.
07233	Cinch-Graphik Co.	City of Industry, Calif.
07256	Silicon Transistor Corp.	Carle Place, N.Y.
07261	Avnet Corp.	Culver City, Calif.
07263	Fairchild Camera & Inst. Corp. Semiconductor Div.	Mountain View, Calif.
07322	Minnesota Rubber Co.	Minneapolis, Minn.
07387	Birtcher Corp., The	Monterey Park, Calif.
07397	Sylvania Elect. Prod. Inc., Mt. View Operations	Mountain View, Calif.
07700	Technical Wire Products Inc.	Cranford, N.J.
07829	Bodine Elect. Co.	Chicago, Ill.
07910	Continental Device Corp.	Hawthorne, Calif.
07933	Raytheon Mfg. Co., Semiconductor Div.	Mountain View, Calif.
07980	Hewlett-Packard Co., Boonton Radio Div.	Rockaway, N.J.
08145	U.S. Engineering Co.	Los Angeles, Calif.
08289	Blinn, Delbert Co.	Pomona, Calif.
08358	Burgess Battery Co.	Niagara Falls, Ontario, Canada
08524	Deutsch Fastener Corp.	Los Angeles, Calif.
08664	Bristol Co., The	Waterbury, Conn.
08717	Sloan Company	Sun Valley, Calif.
08718	ITT Cannon Electric Inc., Phoenix Div.	Phoenix, Arizona
08727	National Radio Lab. Inc.	Paramus, N.J.
08792	CBS Electronics Semiconductor Operations, Div of C.B.S. Inc.	Lowell, Mass.
08806	General Electric Co. Miniat. Lamp Dept.	Cleveland, Ohio
08984	Mel-Rain	Indianapolis, Ind.
09026	Babcock Relays Div.	Costa Mesa, Calif.
09134	Texas Capacitor Co.	Houston, Texas
09145	Tech. Ind. Inc. Atohm Elect.	Burbank, Calif.
09250	Electro Assemblies, Inc.	Chicago, Ill.
09353	C & K Components Inc.	Newton, Mass.
09569	Mallory Battery Co. of Canada, Ltd.	Toronto, Ontario, Canada
09922	Burndy Corp.	Norwalk, Conn.
10214	General Transistor Western Corp.	Los Angeles, Calif.
10411	Ti-Tal, Inc.	Berkeley, Calif.
10646	Carborundum Co.	Niagara Falls, N.Y.
11236	CTS of Berne, Inc.	Berne, Ind.
11237	Chicago Telephone of California, Inc.	So. Pasadena, Calif.
11242	Bay State Electronics Corp.	Waltham, Mass.
11312	Teledyne Inc., Microwave Div.	Palo Alto, Calif.
11314	National Seal	Downey, Calif.
11453	Precision Connector Corp.	Jamaica, N.Y.
11534	Duncan Electronics Inc.	Costa Mesa, Calif.
11711	General Instrument Corp., Semiconductor Div., Products Group	Newark, N.J.
11717	Imperial Electronic, Inc.	Buena Park, Calif.
11870	Melabs, Inc.	Palo Alto, Calif.
12040	National Semiconductor	Danbury, Conn.
12136	Philadelphia Handle Co.	Camden, N.J.
12361	Grove Mfg. Co., Inc.	Shady Grove, Pa.
12574	Gulton Ind. Inc. Data System Div.	Albuquerque, N.M.
12697	Clarostat Mfg. Co.	Dover, N.H.
12728	Elmar Filter Corp.	W. Haven, Conn.
12859	Nippon Electric Co., Ltd.	Tokyo, Japan
12881	Metex Electronics Corp.	Clark, N.J.
12930	Delta Semiconductor Inc.	Newport Beach, Calif.
12954	Dickson Electronics Corp.	Scottsdale, Arizona
13019	Airco Supply Co., Inc.	Witchita, Kansas
13103	Thermolloy	Dallas, Texas
13396	Telefunken (GmbH)	Hanover, Germany
13835	Midland-Wright Div. of Pacific Industries, Inc.	Kansas City, Kansas
14099	Sem-Tech	Newbury Park, Calif.
14193	Calif. Resistor Corp.	Santa Monica, Calif.
14298	American Components, Inc.	Conshohocken, Pa.
14433	ITT Semiconductor, A Div. of Int. Telephone & Telegraph Corp.	West Palm Beach, Fla.
14493	Hewlett-Packard Company	Loveland, Colo.
14655	Cornell Dublier Electric Corp.	Newark, N.J.
14674	Corning Glass Works	Corning, N.Y.
14752	Electro Cube Inc.	San Gabriel, Calif.
14960	Williams Mfg. Co.	San Jose, Calif.
15106	The Sphere Co., Inc.	Little Falls, N.J.
15203	Webster Electronics Co.	New York, N.Y.
15287	Scionics Corp.	Northridge, Calif.
15291	Adjustable Bushing Co.	N. Hollywood, Calif.
15558	Micron Electronics	Garden City, Long Island, N.Y.
15566	Amprobe Inst. Corp.	Lynbrook, N.Y.
15631	Cabletronics	Costa Mesa, Calif.
15772	Twentieth Century Coil Spring Co.	Santa Clara, Calif.
15801	Fenwal Elect. Inc.	Framingham, Mass.
15818	Amelco Inc.	Mt. View, Calif.
16037	Spruce Pine Mica Co.	Spruce Pine, N.C.
16179	Omni-Spectra Inc.	Farmington, Mich.
16352	Computer Diode Corp.	Lodi, N.J.
16585	Boots Aircraft Nut Corp.	Pasadena, Calif.
16688	Ideal Prec. Meter Co., Inc. De Jur Meter Div.	Brooklyn, N.Y.
16758	Delco Radio Div. of G.M. Corp.	Kokoma, Ind.
17109	Thermonetics Inc.	Canoga Park, Calif.
17474	Tranex Company	Mountain View, Calif.
17554	Components Inc.	Biddeford, Ma.
17675	Hamlin Metal Products Corp.	Akron, Ohio
17745	Angstrohm Prec. Inc.	No. Hollywood, Calif.
17856	Siliconix Inc.	Sunnyvale, Calif.

00015-48
Revised October, 1969

From: FSC. Handbook Supplements

Artisan Technology Group - Quality Instrumentation ... Guaranteed | (888) 88-SOURCE | www.artisantg.com

CODE LIST OF MANUFACTURERS (Continued)

Code No.	Manufacturer	Address
17870	McGraw-Edison Co.	Manchester, N.H.
18042	Power Design Pacific Inc.	Palo Alto, Calif.
18083	Clevite Corp., Semiconductor Div.	Palo Alto, Calif.
18324	Signetics Corp.	Sunnyvale, Calif.
18476	Ty-Car Mfg. Co., Inc.	Holliston, Mass.
18486	TRW Elect. Comp. Div.	Des Plaines, Ill.
18583	Curtis Instrument, Inc.	Mt. Kisco, N.Y.
18612	Vishay Instruments Inc.	Malvern, Pa.
18873	E.I. DuPont and Co., Inc.	Wilmington, Del.
18911	Durant Mfg. Co.	Milwaukee, Wis.
19315	The Bendix Corp., Navigation & Control Div.	Teterboro, N.J.
19500	Thomas A. Edison Industries, Div. of McGraw-Edison Co.	West Orange, N.J.
19589	Concoa	Baldwin Park, Calif.
19644	LRC Electronics	Horseheads, N.Y.
19701	Electra Mfg. Co.	Independence, Kansas
20183	General Atronics Corp.	Philadelphia, Pa.
21226	Executone, Inc.	Long Island City, N.Y.
21335	Fafnir Bearing Co., The	New Britain, Conn.
21520	Fansteel Metallurgical Corp.	N. Chicago, Ill.
23042	Texscan Corp.	Indianapolis, Ind.
23783	British Radio Electronics Ltd.	Washington, D.C.
24455	G.E. Lamp Division	Nela Park, Cleveland, Ohio
24655	General Radio Co.	West Concord, Mass.
24681	Memcor Inc., Comp. Div.	Huntington, Ind.
24796	Parelco Inc.	San Juan Capistrano, Calif.
26365	Gries Reproducer Corp.	New Rochelle, N.Y.
26462	Grobet File Co. of America, Inc.	Carlstadt, N.J.
26851	Compac/Hollister Co.	Hollister, Calif.
26992	Hamilton Watch Co.	Lancaster, Pa.
27251	Specialities Mfg. Co., Inc.	Stratford, Conn.
28480	Hewlett-Packard Co.	Palo Alto, Calif.
28520	Heyman Mfg. Co.	Kenilworth, N.J.
30817	Instrument Specialties Co., Inc.	Little Falls, N.J.
33173	G.E. Receiving Tube Dept.	Owensboro, Ky.
35434	Lectrohm Inc.	Chicago, Ill.
36196	Stanwyck Coil Products Ltd.	Hawkesbury, Ontario, Canada
36287	Cunningham, W.H. & Hill, Ltd.	Toronto Ontario, Canada
37942	P.R. Mallory & Co. Inc.	Indianapolis, Ind.
39543	Mechanical Industries Prod. Co.	Akron, Ohio
40920	Miniature Precision Bearings, Inc.	Keene, N.H.
42190	Muter Co.	Chicago, Ill.
43990	C.A. Norgren Co.	Englewood, Colo.
44655	Ohmite Mfg. Co.	Skokie, Ill.
46384	Penn Eng. & Mfg. Corp.	Doylestown, Pa.
47904	Polaroid Corp.	Cambridge, Mass.
48620	Precision Thermometer & Inst. Co.	Southampton, Pa.
49956	Microwave & Power Tube Div.	Waltham, Mass.
52090	Rowan Controller Co.	Westminster, Md.
52983	Sanborn Company	Waltham, Mass.
54294	Shallcross Mfg. Co.	Selma, N.C.
55026	Simpson Electric Co.	Chicago, Ill.
55933	Sonotone Corp.	Elmsford, N.Y.
55938	Raytheon Co. Commercial Apparatus & Systems Div.	So. Norwalk, Conn.
56137	Spaulding Fibre Co., Inc.	Tonawanda, N.Y.
56289	Sprague Electric Co.	North Adams, Mass.
59446	Telex Corp.	Tulsa, Okla.
59730	Thomas & Betts Co.	Elizabeth, N.J.
60741	Triplett Electrical Inst. Co.	Bluffton, Ohio
61775	Union Switch and Signal, Div. of Westinghouse Air Brake Co.	Pittsburgh, Pa.
62119	Universal Electric Co.	Owosso, Mich.
63743	Ward-Leonard Electric Co.	Mt. Vernon, N.Y.
64959	Western Electric Co., Inc.	New York, N.Y.
65092	Weston Inst. Inc. Weston-Newark	Newark, N.J.
66295	Wittek Mfg. Co.	Chicago, Ill.
66346	Minnesota Mining & Mfg. Co. Revere Mincom Div.	St. Paul, Minn.
70276	Allen Mfg. Co.	Hartford, Conn.
70309	Allied Control	New York, N.Y.
70318	Allmetal Screw Product Co., Inc.	Garden City, N.Y.
70417	Amplex, Div. of Chrysler Corp.	Detroit, Mich.
70485	Atlantic India Rubber Works, Inc.	Chicago, Ill.
70563	Amperite Co., Inc.	Union City, N.J.
70674	ADC Products Inc.	Minneapolis, Minn.
70903	Belden Mfg. Co.	Chicago, Ill.
70998	Bird Electronic Corp.	Cleveland, Ohio
71002	Birnbach Radio Co.	New York, N.Y.
71034	Bliley Electric Co., Inc.	Erie, Pa.
71041	Boston Gear Works Div. of Murray Co. of Texas	Quincy, Mass.
71218	Bud Radio, Inc.	Willoughby, Ohio
71279	Cambridge Thermionics Corp.	Cambridge, Mass.
71286	Camloc Fastener Corp.	Paramus, N.J.
71313	Cardwell Condenser Corp.	Lindenhurst L.I., N.Y.
71400	Bussmann Mfg. Div. of McGraw-Edison Co.	St. Louis, Mo.
71436	Chicago Condenser Corp.	Chicago, Ill.
71447	Calif. Spring Co., Inc.	Pico-Rivera, Calif.
71450	CTS Corp.	Elkhart, Ind.
71468	ITT Cannon Electric Inc.	Los Angeles, Calif.
71471	Cinema, Div. Aerovox Corp.	Burbank, Calif.
71482	C.P. Clare & Co.	Chicago, Ill.
71590	Centralab Div. of Globe Union Inc.	Milwaukee, Wis.
71616	Commercial Plastics Co.	Chicago, Ill.
71700	Cornish Wire Co., The	New York, N.Y.
71707	Coto Coil Co., Inc.	Providence, R.I.
71744	Chicago Miniature Lamp Works	Chicago, Ill.
71785	Cinch Mfg. Co., Howard B. Jones Div.	Chicago, Ill.
71984	Dow Corning Corp.	Midland, Mich.
72136	Electro Motive Mfg. Co., Inc.	Willimantic, Conn.
72619	Dialight Corp.	Brooklyn, N.Y.
72656	Indiana General Corp., Electronics Div.	Keasby, N.J.
72699	General Instrument Corp., Cap. Div.	Newark, N.J.
72765	Drake Mfg. Co.	Harwood Heights, Ill.
72825	Hugh H. Eby Inc.	Philadelphia, Pa.
72928	Gudeman Co.	Chicago, Ill.
72962	Elastic Stop Nut Corp.	Union, N.J.
72964	Robert M. Hadley Co.	Los Angeles, Calif.
72982	Erie Technological Products, Inc.	Erie, Pa.
73061	Hansen Mfg. Co., Inc.	Princeton, Ind.
73076	H.M. Harper Co.	Chicago, Ill.
73138	Helipot Div. of Beckman Inst., Inc.	Fullerton, Calif.
73293	Hughes Products Division of Hughes Aircraft Co.	Newport Beach, Calif.
73445	Amperex Elect Co.	Hicksville, L.I., N.Y.
73506	Bradley Semiconductor Corp.	New Haven, Conn.
73559	Carling Electric, Inc.	Hartford, Conn.
73586	Circle F Mfg. Co.	Trenton, N.J.
73682	George K. Garrett Co., Div. MSL Industries Inc.	Philadelphia, Pa.
73734	Federal Screw Products Inc.	Chicago, Ill.
73743	Fischer Special Mfg. Co.	Cincinnati, Ohio
73793	General Industries Co., The	Elyria, Ohio
73846	Goshen Stamping & Tool Co.	Goshen, Ind.
73899	JFD Electronics Corp.	Brooklyn, N.Y.
73905	Jennings Radio Mfg. Corp.	San Jose, Calif.
73957	Groov-Pin Corp.	Ridgefield, N.J.
74276	Signalite Inc.	Neptune, N.J.
74455	J.H. Winns, and Sons	Winchester, Mass.
74861	Industrial Condenser Corp.	Chicago, Ill.
74868	R.F. Products Division of Amphenol-Borg Electronics Corp.	Danbury, Conn.
74970	E.F. Johnson Co.	Waseca, Minn.
75042	International Resistance Co.	Philadelphia, Pa.
75263	Keystone Carbon Co., Inc.	St. Marys, Pa.
75378	CTS Knights Inc.	Sandwich, Ill.
75382	Kulka Electric Corporation	Mt. Vernon, N.Y.
75818	Lenz Electric Mfg. Co.	Chicago, Ill.
75915	Littlefuse, Inc.	Des Plaines, Ill.
76005	Lord Mfg. Co.	Erie, Pa.
76210	C.W. Marwedel	San Francisco, Calif.
76433	General Instrument Corp., Micamold Division	Newark, N.J.
76487	James Millen Mfg. Co., Inc.	Malden, Mass.
76493	J.W. Miller Co.	Los Angeles, Calif.
76530	Cinch-Monadnock, Div. of United Carr Fastener Corp.	San Leandro, Calif.
76545	Mueller Electric Co.	Cleveland, Ohio
76703	National Union	Newark, N.J.
76854	Oak Manufacturing Co.	Crystal Lake, Ill.
77068	The Bendix Corp., Electrodynamics Div.	N. Hollywood, Calif.
77075	Pacific Metals Co.	San Francisco, Calif.
77221	Phanostran Instrument and Electronic Co.	South Pasadena, Calif.
77252	Philadelphia Steel and Wire Corp.	Philadelphia, Pa.
77342	American Machine & Foundry Co. Potter & Brumfield Div.	Princeton, Ind.
77630	TRW Electronic Components Div.	Camden, N.J.
77638	General Instrument Corp., Rectifier Div.	Brooklyn, N.Y.
77764	Resistance Products Co.	Harrisburg, Pa.
77969	Rubbercraft Corp. of Calif.	Torrance, Calif.
78189	Shakeproof Division of Illinois Tool Works	Elgin, Ill.
78277	Sigma	So. Braintree, Mass.
78283	Signal Indicator Corp.	New York, N.Y.
78290	Struthers-Dunn Inc.	Pitman, N.J.
78424	Speciality Leather Prod. Co.	Newark, N.J.
78452	Thompson-Bremer & Co.	Chicago, Ill.
78471	Tilley Mfg. Co.	San Francisco, Calif.
78488	Stackpole Carbon Co.	St. Marys, Pa.
78493	Standard Thomson Corp.	Waltham, Mass.
78553	Tinnerman Products, Inc.	Cleveland, Ohio
78790	Transformer Engineers	San Gabriel, Calif.
78947	Ucinite Co.	Newtonville, Mass.
79136	Waldes Kohinoor Inc.	Long Island City, N.Y.
79142	Veeder Root, Inc.	Hartford, Conn.
79251	Wenco Mfg. Co.	Chicago, Ill.
79727	Continental-Wirt Electronics Corp.	Philadelphia, Pa.
79963	Zierick Mfg. Corp.	New Rochelle, N.Y.
80031	Mepco Division of Sessions Clock Co.	Morristown, N.J.
80033	Prestole Corp.	Toledo, Ohio
80120	Schnitzer Alloy Products Co.	Elizabeth, N.J.
80131	Electronic Industries Association. Any brand Tube meeting EIA Standards-Washington, DC.	
80207	Unimax Switch, Div. Maxon Electronics Corp.	Wallingford, Conn.
80223	United Transformer Corp.	New York, N.Y.
80248	Oxford Electric Corp.	Chicago, Ill.
80294	Bourns Inc.	Riverside, Calif.
80411	Acro Div. of Robertshaw Controls Co.	Columbus, Ohio

From: FSC. Handbook Supplements

Artisan Technology Group - Quality Instrumentation ... Guaranteed | (888) 88-SOURCE | www.artisantg.com

CODE LIST OF MANUFACTURERS (Continued)

Code No.	Manufacturer	Address
80486	All Star Products Inc.	Defiance, Ohio
80509	Avery Label Co.	Monrovia, Calif.
80583	Hammarlund Co., Inc.	Mars Hill, N.C.
80640	Stevens, Arnold, Co., Inc.	Boston, Mass.
80813	Dimco Gray Co.	Dayton, Ohio
81030	International Instruments Inc.	Orange, Conn.
81073	Grayhill Co.	LaGrange, Ill.
81095	Triad Transformer Corp.	Venice, Calif.
81312	Winchester Elec. Div. Litton Ind., Inc.	Oakville, Conn.
81349	Military Specification	. . . . .
81483	International Rectifier Corp.	El Segundo, Calif.
81541	Airpax Electronics, Inc.	Cambridge, Maryland
81860	Barry Controls, Div. Barry Wright Corp.	Watertown, Mass.
82042	Carter Precision Electric Co.	Skokie, Ill.
82047	Sperti Faraday Inc., Copper Hewitt Electric Div.	Hoboken, N.J.
82116	Electric Regulator Corp.	Norwalk, Conn.
82142	Jeffers Electronics Division of Speer Carbon Co.	Du Bois, Pa.
82170	Fairchild Camera & Inst. Corp. Space & Defense System Div.	Paramus, N.J.
82209	Maguire Industries, Inc.	Greenwich, Conn.
82219	Sylvania Electric Prod. Inc. Electronic Tube Division	Emporium, Pa.
82376	Astron Corp.	East Newark, Harrison, N.J.
82389	Switchcraft, Inc.	Chicago, Ill.
82647	Metals & Controls Inc. Spencer Products	Attleboro, Mass.
82768	Phillips-Advance Control Co.	Joliet, Ill.
82866	Research Products Corp.	Madison, Wis.
82877	Rotron Mfg. Co., Inc.	Woodstock, N.Y.
82893	Vector Electronic Co.	Glendale, Calif.
83014	Hartwell Corp.	Los Angeles, Calif.
83058	Carr Fastener Co.	Cambridge, Mass.
83086	New Hampshire Ball Bearing, Inc.	Peterborough, N.H.
83125	General Instrument Corp., Capacitor Div.	Darlington, S.C.
83148	ITT Wire and Cable Div.	Los Angeles, Calif.
83186	Victory Eng. Corp.	Springfield, N.J.
83298	Bendix Corp., Red Bank Div.	Red Bank, N.J.
83315	Hubbell Corp.	Mundelein, Ill.
83324	Rosan Inc.	Newport Beach, Calif.
83330	Smith, Herman H., Inc.	Brooklyn, N.Y.
83332	Tech Labs	Palisade's Park, N.J.
83385	Central Screw Co.	Chicago, Ill.
83501	Gavitt Wire and Cable Co. Div. of Amerace Corp.	Brookfield, Mass.
83594	Burroughs Corp. Electronic Tube Div.	Plainfield, N.J.
83740	Union Carbide Corp. Consumer Prod. Div.	New York, N.Y.
83777	Model Eng. and Mfg., Inc.	Huntington, Ind.
83821	Loyd Scruggs Co.	Festus, Mo.
83942	Aeronautical Inst. & Radio Co.	Lodi, N.J.
84171	Arco Electronics Inc.	Great Neck, N.Y.
84396	A. J. Glesener Co., Inc.	San Francisco, Calif.
84411	TRW Capacitor Div.	Ogallala, Neb.
84970	Sarkes Tarzian, Inc.	Bloomington, Ind.
85454	Boonton Molding Company	Boonton, N.J.
85471	A.B. Boyd Co.	San Francisco, Calif.
85474	R.M. Bracamonte & Co.	San Francisco, Calif.
85660	Koiled Kords, Inc.	Hamden, Conn.
85911	Seamless Rubber Co.	Chicago, Ill.
86174	Fafnir Bearing Co.	Los Angeles, Calif.
86197	Clifton Precision Products Co., Inc.	Clifton Heights, Pa.
86579	Precision Rubber Products Corp.	Dayton, Ohio
86684	Radio Corp. of America, Electronic Comp. & Devices Div.	Harrison, N.J.
86928	Seastrom Mfg. Co.	Glendale, Calif.
87034	Marco Industries	Anaheim, Calif.
87216	Philco Corporation (Lansdale Division)	Lansdale, Pa.
87473	Western Fibrous Glass Products Co.	San Francisco, Calif.
87664	Van Waters & Rogers Inc.	San Francisco, Calif.
87930	Tower Mfg. Corp.	Providence, R.I.
88140	Cutler-Hammer, Inc.	Lincoln, Ill.
88220	Gould-National Batteries, Inc.	St. Paul, Minn.
88698	General Mills, Inc.	Buffalo, N.Y.
89231	Graybar Electric Co.	Oakland, Calif.
89473	G.E. Distributing Corp.	Schenectady, N.Y.
89665	United Transformer Co.	Chicago, Ill.
90030	United Shoe Machinery Corp.	Beverly, Mass.
90179	US Rubber Co., Consumer Ind. & Plastics Prod. Div.	Passaic, N.J.
90763	United Carr Fastener Corp.	Chicago, Ill.
90970	Bearing Engineering Co.	San Francisco, Calif.
91146	ITT Cannon Elect, Inc., Salem Div.	Salem, Mass.
91260	Connor Spring Mfg. Co.	San Francisco, Calif.
91345	Miller Dial & Nameplate Co.	El Monte, Calif.
91418	Radio Materials Co.	Chicago, Ill.
91506	Augat Inc.	Attleboro, Mass.
91637	Dale Electronics, Inc.	Columbus, Nebr.
91662	Elco Corp.	Willow Grove, Pa.
91737	Gremar Mfg. Co., Inc.	Wakefield, Mass.
91827	K F Development Co.	Redwood City, Calif.
91886	Malco Mfg. Co., inc.	Chicago, Ill.
91929	Honeywell Inc., Micro Switch Div.	Freeport, Ill.
91961	Nahm-Bros. Spring Co.	Oakland, Calif.
92180	Tru-Connector Corp.	Peabody, Mass.
92367	Elgeet Optical Co. Inc.	Rochester, N.Y.
92607	Tensolite Insulated Wire Co., Inc.	Tarrytown, N.Y.
92702	IMC Magnetics Corp.	Wesbury Long Island, N.Y.
92966	Hudson Lamp Co.	Kearney, N.J.
93332	Sylvania Electric Prod. Inc. Semiconductor Div.	Woburn, Mass.
93369	Robbins & Myers Inc.	Palisades Park, N.J.
93410	Stemco Controls, Div. of Essex Wire Corp.	Mansfield, Ohio
93632	Waters Mfg. Co.	Culver City, Calif.
93929	G.V. Controls	Livingston, N.J.
94137	General Cable Corp.	Bayonne, N.J.
94142	Phelps Dodge	Yonkers, N.Y.
94144	Raytheon Co., Comp. Div., Ind. Comp. Operations	Quincy, Mass.
94148	Scientific Electronics Products, Inc.	Loveland, Colo.
94154	Wagner Elect. Corp., Tung-Sol Div.	Newark, N.J.
94197	Curtiss-Wright Corp. Electronics Div.	East Paterson, N.J.
94222	South Chester Corp.	Chester, Pa.
94330	Wire Cloth Products, Inc.	Bellwood, Ill.
94375	Automatic Metal Products Co.	Brooklyn, N.Y.
94682	Worcester Pressed Aluminum Corp.	Worcester, Mass.
94696	Magnecraft Electric Co.	Chicago, Ill.
95023	George A. Philbrick Researchers, Inc.	Boston, Mass.
95236	Allies Products Corp.,	Dania, Fla.
95238	Continental Connector Corp.	Woodside, N.Y.
95263	Leecraft Mfg. Co., Inc.	Long Island, N.Y.
95265	National Coil Co.	Sheridan, Wyo.
95275	Vitramon, Inc.	Bridgeport, Conn.
95348	Gordos Corp.	Bloomfield, N.J.
95354	Methode Mfg. Co.	Rolling Meadows, Ill.
95566	Arnold Engineering Co.	Marengo, Ill.
95712	Dage Electric Co., Inc.	Franklin, Ind.
95984	Siemon Mfg. Co.	Wayne, Ill.
95987	Weckesser Co.	Chicago, Ill.
96067	Microwave Assoc., West Inc.	Sunnyvale, Calif.
96095	Hi-Q Div. of Aerovox Corp.	Olean, N.Y.
96256	Thordarson-Meissner Inc.	Mt. Carmel, Ill.
96296	Solar Manufacturing Co.	Los Angeles, Calif.
96306	Microswitch, Div. of Minn.-Honeywell	Freeport, Ill.
96330	Carlton Screw Co.	Chicago, Ill.
96341	Microwave Associates, Inc.	Burlington, Mass.
96501	Excel Transformer Co.	Oakland, Calif.
96508	Xcelite Inc.	Orchard Park, N.Y.
96733	San Fernando Elect. Mfg. Co.	San Fernando, Calif.
96881	Thomson Ind. Inc.	Long Is., N.Y.
97464	Industrial Retaining Ring Co.	Irvington, N.J.
97539	Automatic & Precision Mfg.	Englewood, N.J.
97979	Reon Resistor Corp.	Yonkers, N.Y.
97983	Litton System Inc., Adler-Westrex Commun. Div.	New Rochelle, N.Y.
98141	R-Troncis, Inc.	Jamaica, N.Y.
98159	Rubber Teck, Inc.	Gardena, Calif.
98220	Hewlett-Packard Co., Moseley Div.	Pasadena, Calif.
98278	Microdot, Inc.	So. Pasadena, Calif.
98291	Sealectro Corp.	Mamaroneck, N.Y.
98376	Zero Mfg. Co.	Burbank, Calif.
98410	Etc Inc.	Cleveland, Ohio
98731	General Mills Inc., Electronics Div.	Minneapolis, Minn.
98734	Paeco Div. of Hewlett-Packard Co.	Palo Alto, Calif.
98821	North Hills Electronics, Inc.	Glen Cove, N.Y.
98978	International Electronic Research Corp.	Burbank, Calif.
99109	Columbia Technical Corp.	New York, N.Y.
99313	Varian Associates	Palo Alto, Calif.
99378	Atlee Corp.	Winchester, Mass.
99515	Marshall Ind., Capacitor Div.	Monrovia, Calif.
99707	Control Switch Division, Controls Co. of America	El Segundo, Calif.
99800	Delevan Electronics Corp.	East Aurora, N.Y.
99848	Wilco Corporation	Indianapolis, Ind.
99928	Branson Corp.	Whippany, N.J.
99934	Renbrandt, Inc.	Boston, Mass.
99942	Hoffman Electronics Corp. Semiconductor Div.	El Monte, Calif.
99957	Technology Instrument Corp. of Calif.	Newbury Park, Calif.

THE FOLLOWING HP VENDORS HAVE NO NUMBER ASSIGNED IN THE LATEST SUPPLEMENT TO THE FEDERAL SUPPLY CODE FOR MANUFACTURERS HANDBOOK.

0000F	Malco Tool and Die	Los Angeles, Calif.
0000Z	Willow Leather Products Corp.	Newark, N.J.
000AB	ETA	England
000BB	Precision Instrument Components Co.	Van Nuys, Calif.
000CS	Hewlett-Packard Co., Colorado Springs	Colorado Springs, Colorado
000MM	Rubber Eng. & Development	Hayward, Calif.
000NN	A "N" D Mfg. Co.	San Jose, Calif.
000QQ	Cooltron	Oakland, Calif.
000WW	California Eastern Lab.	Burlington, Calif.
000YY	S.K. Smith Co.	Los Angeles, Calif.

From: FSC. Handbook Supplements

Artisan Technology Group - Quality Instrumentation ... Guaranteed | (888) 88-SOURCE | www.artisantg.com

SALES & SERVICE OFFICES

UNITED STATES

ALABAMA
P.O. Box 4207
2003 Byrd Spring Road S.W.
Huntsville 35802
Tel: (205) 881-4591
TWX: 810-726-2204

ARIZONA
3009 North Scottsdale Road
Scottsdale 85251
Tel: (602) 945-7601
TWX: 910-950-1282

5737 East Broadway
Tucson 85716
Tel: (602) 298-2313
TWX: 910-952-1162

CALIFORNIA
1430 East Orangethorpe Ave.
Fullerton 92631
Tel: (714) 870-1000

3939 Lankershim Boulevard
North Hollywood 91604
Tel: (213) 877-1282
TWX: 910-499-2170

1101 Embarcadero Road
Palo Alto 94303
Tel: (415) 327-6500
TWX: 910-373-1280

2591 Carlsbad Avenue
Sacramento 95821
Tel: (916) 482-1463
TWX: 910-367-2092

1055 Shafter Street
San Diego 92106
Tel: (714) 223-8103
TWX: 910-335-2000

COLORADO
7965 East Prentice
Englewood 80110
Tel: (303) 771-3455
TWX: 910-935-0705

CONNECTICUT
508 Tolland Street
East Hartford 06108
Tel: (203) 289-9394
TWX: 710-425-3416

111 East Avenue
Norwalk 06851
Tel: (203) 853-1251
TWX: 710-468-3750

DELAWARE
3941 Kennett Pike
Wilmington 19807
Tel: (302) 655-6161
TWX: 510-666-2214

FLORIDA
P.O. Box 545
Suite 106
9999 N.E. 2nd Avenue
Miami Shores 33153
Tel: (305) 754-4565
TWX: 810-848-7262

P.O. Box 20007
Herndon Station 32814
621 Commonwealth Avenue
Orlando
Tel: (305) 841-3970
TWX: 810-850-0113

P.O. Box 8128
Madeira Beach 33708
410 150th Avenue
St. Petersburg
Tel: (813) 391-0211
TWX: 810-863-0366

GEORGIA
P.O. Box 28234
450 Interstate North
Atlanta 30328
Tel: (404) 436-6181
TWX: 810-766-4890

ILLINOIS
5500 Howard Street
Skokie 60076
Tel: (312) 677-0400
TWX: 910-223-3613

INDIANA
3839 Meadows Drive
Indianapolis 46205
Tel: (317) 546-4891
TWX: 810-341-3263

LOUISIANA
P.O. Box 856
1942 Williams Boulevard
Kenner 70062
Tel: (504) 721-6201
TWX: 810-955-5524

MARYLAND
6707 Whitestone Road
Baltimore 21207
Tel: (301) 944-5400
TWX: 710-862-0850

P.O. Box 1648
2 Choke Cherry Road
Rockville 20850
Tel: (301) 948-6370
TWX: 710-828-9684

MASSACHUSETTS
32 Hartwell Ave.
Lexington 02173
Tel: (617) 861-8960
TWX: 710-326-6904

MICHIGAN
24315 Northwestern Highway
Southfield 48075
Tel: (313) 353-9100
TWX: 810-232-1532

MINNESOTA
2459 University Avenue
St. Paul 55114
Tel: (612) 645-9461
TWX: 910-563-3734

MISSOURI
11131 Colorado Ave.
Kansas City 64137
Tel: (816) 763-8000
TWX: 910-771-2087

2812 South Brentwood Blvd.
St. Louis 63144
Tel: (314) 962-5000
TWX: 910-760-1670

NEW JERSEY
W. 120 Century Road
Paramus 07652
Tel: (201) 265-5000
TWX: 710-990-4951

1060 N. Kings Highway
Cherry Hill 08034
Tel: (609) 667-4000
TWX: 710-892-4945

NEW MEXICO
P.O. Box 8366
Station C
6501 Lomas Boulevard N.E.
Albuquerque 87108
Tel: (505) 255-5586
TWX: 910-989-1665

156 Wyatt Drive
Las Cruces 88001
Tel: (505) 526-2485
TWX: 910-983-0550

NEW YORK
1702 Central Avenue
Albany 12205
Tel: (518) 869-8462
TWX: 710-441-8270

1219 Campville Road
Endicott 13760
Tel: (607) 754-0050
TWX: 510-252-0890

82 Washington Street
Poughkeepsie 12601
Tel: (914) 454-7330
TWX: 510-248-0012

39 Saginaw Drive
Rochester 14623
Tel: (716) 473-9500
TWX: 510-253-5981

1025 Northern Boulevard
Roslyn, Long Island 11576
Tel: (516) 869-8400
TWX: 510-223-0811

5858 East Molloy Road
Syracuse 13211
Tel: (315) 454-2486
TWX: 710-541-0482

NORTH CAROLINA
P.O. Box 5188
1923 North Main Street
High Point 27262
Tel: (919) 885-8101
TWX: 510-926-1516

OHIO
25575 Center Ridge Road
Cleveland 44145
Tel: (216) 835-0300
TWX: 810-427-9129

3460 South Dixie Drive
Dayton 45439
Tel: (513) 298-0351
TWX: 810-459-1925

OKLAHOMA
2919 United Founders Boulevard
Oklahoma City 73112
Tel: (405) 848-2801
TWX: 910-830-6862

OREGON
Westhills Mall, Suite 158
4475 S.W. Scholls Ferry Road
Portland 97225
Tel: (503) 292-9171
TWX: 910-464-6103

PENNSYLVANIA
2500 Moss Side Boulevard
Monroeville 15146
Tel: (412) 271-0724
TWX: 710-797-3650

1021 8th Avenue
King of Prussia Industrial Park
King of Prussia 19406
Tel: (215) 265-7000
TWX: 510-660-2670

RHODE ISLAND
873 Waterman Ave.
East Providence 02914
Tel: (401) 434-5535
TWX: 710-381-7573

TEXAS
P.O. Box 1270
201 E. Arapaho Rd.
Richardson 75080
Tel: (214) 231-6101
TWX: 910-867-4723

6300 Westpark Drive
Houston 77027
Tel: (713) 781-6000
TWX: 910-881-2645

231 Billy Mitchell Road
San Antonio 78226
Tel: (512) 434-4171
TWX: 910-871-1170

UTAH
2890 South Main Street
Salt Lake City 84115
Tel: (801) 487-0715
TWX: 910-925-5681

VERMONT (Feb. 70)
P.O. Box 2287
Kennedy Drive
South Burlington 05401
Tel: (802) 658-4455
TWX: 710-658-4712

VIRGINIA
P.O. Box 6514
2111 Spencer Road
Richmond 23230
Tel: (703) 282-5451
TWX: 710-956-0157

WASHINGTON
433-108th N.E.
Bellevue 98004
Tel: (206) 454-3971
TWX: 910-443-2303

***WEST VIRGINIA**
Charleston
Tel: (304) 768-1232

FOR U.S. AREAS NOT LISTED:
Contact the regional office nearest you: Atlanta, Georgia . . . North Hollywood, California . . . Paramus, New Jersey . . . Skokie, Illinois. Their complete addresses are listed above.

*Service Only

CANADA

ALBERTA
Hewlett-Packard (Canada) Ltd.
11745 Jasper Ave.
Edmonton
Tel: (403) 482-5561
TWX: 610-831-2431

BRITISH COLUMBIA
Hewlett-Packard (Canada) Ltd.
1037 West Broadway
Vancouver 12
Tel: (604) 731-5301
TWX: 610-922-5059

MANITOBA
Hewlett-Packard (Canada) Ltd.
511 Bradford Ct.
St. James
Tel: (204) 786-7581
TWX: 610-671-3531

NOVA SCOTIA
Hewlett-Packard (Canada) Ltd.
2745 Dutch Village Rd.
Suite 203
Halifax
Tel: (902) 455-0511
TWX: 610-271-4482

ONTARIO
Hewlett-Packard (Canada) Ltd.
880 Lady Ellen Place
Ottawa 3
Tel: (613) 722-4223
TWX: 610-562-1952

Hewlett-Packard (Canada) Ltd.
50 Galaxy Blvd.
Rexdale
Tel: (416) 677-9611
TWX: 610-492-4246

QUEBEC
Hewlett-Packard (Canada) Ltd.
275 Hymus Boulevard
Pointe Claire
Tel: (514) 697-4232
TWX: 610-422-3022
Telex: 01-20607

FOR CANADIAN AREAS NOT LISTED:
Contact Hewlett-Packard (Canada) Ltd. in Pointe Claire, at the complete address listed above.

CENTRAL AND SOUTH AMERICA

ARGENTINA
Hewlett-Packard Argentina S.A.C.e.I
Lavalle 1171 - 3°
Buenos Aires
Tel: 35-0436, 35-0627, 35-0431
Telex: 012-1009
Cable: HEWPACKARG

BRAZIL
Hewlett-Packard Do Brasil I.e.C Ltda.
Rua Coronel: Oscar Porto, 691
Sao Paulo - 8, SP
Tel: 71-1503
Cable: HEWPACK Sao Paulo

Hewlett-Packard Do Brasil I.e.C. Ltda.
Avenida Franklin Roosevelt 84-grupo 203
Rio de Janeiro, ZC-39, GB
Tel: 232-9733
Cable: HEWPACK Rio de Janeiro

CHILE
Héctor Calcagni y Cia, Ltda.
Bustos, 1932-3er Piso
Casilla 13942
Santiago
Tel: 4-2396
Cable: Calcagni Santiago

COLOMBIA
Instrumentacion
Henrik A. Langebaek & Kier Ltda.
Carrera 7 No. 48-59
Apartado Aereo 6287
Bogota, 1 D.E.
Tel: 45-78-06, 45-55-46
Cable: AARIS Bogota
Telex: 044-400

COSTA RICA
Lic. Alfredo Gallegos Gurdián
Apartado 3243
San José
Tel: 21-86-13
Cable: GALGUR San José

ECUADOR
Laboratorios de Radio-Ingenieria
Calle Guayaquil 1246
Post Office Box 3199
Quito
Tel: 12496
Cable: HORVATH Quito

EL SALVADOR
Electrónica
Apartado Postal 1589
27 Avenida Norte 1133
San Salvador
Tel: 25-74-50
Cable: ELECTRONICA San Salvador

GUATEMALA
Olander Associates Latin America
Apartado Postal 1226
Ruta 4, 6-53, Zona 4
Guatemala City
Tel: 63958
Cable: OLALA Guatemala City

JAMAICA
General Engineering Services, Ltd.
27 Dunrobin Ave.
Kingston
Tel: 42657
Cable: GENSERV

MEXICO
Hewlett-Packard Mexicana, S.A. de C.V.
Moras 439
Col. del Valle
Mexico 12, D.F.
Tel: 5-75-46-49

NICARAGUA
Roberto Terán G.
Apartado Postal 689
Edificio Terán
Managua
Tel: 3451, 3452
Cable: ROTERAN Managua

PANAMA
Electrónica Balboa, S.A.
P.O. Box 4929
Ave. Manuel Espinosa No. 13-50
Bldg. Alina
Panama City
Tel: 30833
Cable: ELECTRON Panama City

PERU
Fernando Ezeta B.
Avenida Petit Thouars 4719
Miraflores
Casilla 3061
Lima
Tel: 45-2335
Cable: FEPERU Lima

PUERTO RICO
San Juan Electronics, Inc.
P.O. Box 5167
Ponce de Leon 154
Pda. 3-Pta. de Tierra
San Juan 00906
Tel: (809) 725-3342
Cable: SATRONICS San Juan
Telex: SATRON 3450 332

URUGUAY
Pablo Ferrando S.A.
Comercial e Industrial
Avenida Italia 2877
Casilla de Correo 370
Montevideo
Tel: 40-3102
Cable: RADIUM Montevideo

VENEZUELA
Hewlett-Packard De Venezuela C.A.
Apartado 50933
Caracas
Tel: 71.88.05, 71.88.69, 71.99.30
Cable: HEWPACK Caracas

FOR AREAS NOT LISTED, CONTACT:
Hewlett-Packard INTERCONTINENTAL
3200 Hillview Ave.
Palo Alto, California 94304
Tel: (415) 326-7000
TWX: 910-373-1267
Cable: HEWPACK Palo Alto
Telex: 034-8461

E 1/70

Artisan Technology Group - Quality Instrumentation ... Guaranteed | (888) 88-SOURCE | www.artisantg.com

EUROPE

AUSTRIA
Unilabor GmbH
Wissenschaftliche Instrumente
Rummelhardtgasse 6/3
P.O. Box 33
Vienna A-1095
Tel: 42 61 81
Cable: LABORINSTRUMENT Vienna
Telex: 75 762

BELGIUM
Hewlett-Packard Benelux S.A.
348 Boulevard du Souverain
Brussels 16
Tel: 72 22 40
Cable: PALOBEN Brussels
Telex: 23 494

DENMARK
Hewlett-Packard A/S
Langebjerg 6
2850 **Naerum**
Tel: (01) 80 40 40
Cable: HEWPACK AS
Telex: 66 40

FINLAND
Hewlett-Packard Oy
Gyldenintie 3
Helsinki 20
Tel: 67 35 38
Cable: HEWPACKOY-Helsinki
Telex: 12-1563

FRANCE
Hewlett-Packard France
Quartier de Courtaboeuf
Boite Postale No. 6
91 Orsay
Tel: 920 88 01
Cable: HEWPACK Orsay
Telex: 60048

Hewlett-Packard France
4 Quai des Etroits
69 **Lyon** 5ème
Tel: 42 63 45
Cable: HEWPACK Lyon
Telex: 31617

GERMANY
Hewlett-Packard Vertriebs-GmbH
Lietzenburgerstrasse 30
1 **Berlin W** 30
Tel: 24 60 65/66
Telex: 18 34 05

Hewlett-Packard Vertriebs-GmbH
Herrenbergerstrasse 110
703 **Böblingen**, Württemberg
Tel: 07031-6671
Cable: HEPAG Böblingen
Telex: 72 65 739

Hewlett-Packard Vertriebs-GmbH
Achenbachstrasse 15
4 **Düsseldorf** 1
Tel: 68 52 58/59
Telex: 85 86 533

Hewlett-Packard Vertriebs-GmbH
Berliner Strasse 117
6 **Nieder-Eschbach/Frankfurt 56**
Tel: (0611) 50 10 64
Cable: HEWPACKSA Frankfurt
Telex: 41 32 49

Hewlett-Packard Vertriebs-GmbH
Beim Strohhause 26
2 **Hamburg** 1
Tel: 24 05 51/52
Cable: HEWPACKSA Hamburg
Telex: 21 53 32

Hewlett-Packard Vertriebs-GmbH
Reginfriedstrasse 13
8 **München** 9
Tel: 0811 69 59 71/75
Cable: HEWPACKSA München
Telex: 52 49 85

GREECE
Kostas Karayannis
18, Ermou Street
Athens 126
Tel: 230303 232947
Cable: RAKAR Athens
Telex: 21 59 62 RKAR GR

IRELAND
Hewlett-Packard Ltd.
224 Bath Road
Slough, Bucks, England
Tel: Slough 753-33341
Cable: HEWPIE Slough
Telex: 84413

ITALY
Hewlett-Packard Italiana S.p.A.
Via Amerigo Vespucci 2
20124 **Milano**
Tel: 6251 (10 lines)
Cable: HEWPACKIT Milan
Telex: 32046

Hewlett-Packard Italiana S.p.A.
Palazzo Italia
Piazza Marconi 25
00144 **Rome** - Eur
Tel: 591 2544
Cable: HEWPACKIT Rome
Telex: 61514

NETHERLANDS
Hewlett-Packard Benelux, N.V.
Weerdestein 117
Amsterdam, Z 11
Tel: 42 77 77
Cable: PALOBEN Amsterdam
Telex: 13 216

NORWAY
Hewlett-Packard Norge A/S
Box 149
Nesveien 13
Haslum
Tel: 53 83 60
Cable: HEWPACK Oslo
Telex: 6621

PORTUGAL
Telectra
Rua Rodrigo da Fonseca 103
P.O. Box 2531
Lisbon 1
Tel: 68 60 72
Cable: TELECTRA Lisbon
Telex: 1598

SPAIN
Ataio Ingenieros
Ganduxer 76
Barcelona 6
Tel: 211-44-66

Ataio Ingenieros
Enrique Larreta 12
Madrid, 16
Tel: 235 43 44
Cable: TELEATAIO Madrid
Telex: 2 72 49

SWEDEN
Hewlett-Packard (Sverige) AB
Hagakersgatan 9C
S 431 04 **Mölndal** 4
Tel: 031 - 27 68 00

Hewlett-Packard (Sverige) AB
Svetsarvägen 7
S171 20 **Solna** 1
Tel: (08) 98 12 50
Cable: MEASUREMENTS Stockholm
Telex: 10721

SWITZERLAND
Hewlett Packard (Schweiz) AG
Zurcherstrasse 20
8952 Schlieren
Zurich
Tel: (051) 98 18 21/24
Cable: HEWPACKAG Zurich
Telex: 53933

Hewlett Packard (Schweiz) A.G.
Rue du Bois-du-Lan 7
1217 Meyrin-**Geneva**
Tel: (022) 41 54 00
Cable: HEWPACKSA Geneva
Telex: 2 24 86

TURKEY
Telekom Engineering Bureau
P.O. Box 376 - Galata
Istanbul
Tel: 49 40 40
Cable: TELEMATION Istanbul

UNITED KINGDOM
Hewlett-Packard Ltd.
224 Bath Road
Slough, Bucks
Tel: Slough 33341
Cable: HEWPIE Slough
Telex: 84413

YUGOSLAVIA
Belram S.A.
83 avenue des Mimosas
Brussels 15, Belgium
Tel: 34 33 32, 34 26 19
Cable: BELRAMEL Brussels
Telex: 21790

FOR AREAS NOT LISTED, CONTACT:
Hewlett-Packard S.A.
Rue du Bois-du-Lan 7
1217 Meyrin-**Geneva**
Tel: (022) 41 54 00
Cable: HEWPACKSA Geneva
Telex: 2.24.86

AFRICA, ASIA, AUSTRALIA

ANGOLA
Telectra Empresa Técnica de Equipamentos Eléctricos SAR
Rua de Barbosa Rodrigues 42-1°
Box 6487
Luanda
Cable: TELECTRA Luanda

AUSTRALIA
Hewlett-Packard Australia Pty. Ltd.
22-26 Weir Street
Glen Iris, 3146
Victoria
Tel: 20.1371 (4 lines)
Cable: HEWPARD Melbourne
Telex: 31024

Hewlett-Packard Australia Pty. Ltd.
61 Alexander Street
Crows Nest 2065
New South Wales
Tel: 43.7866
Cable: HEWPARD Sydney
Telex: 21561

Hewlett-Packard Australia Pty. Ltd.
97 Churchill Road
Prospect 5082
South Australia
Tel: 65.2366
Cable: HEWPARD Adelaide

Hewlett Packard Australia Pty. Ltd.
2nd Floor, Suite 13
Casablanca Buildings
196 Adelaide Terrace
Perth, W.A. 6000
Tel: 21-3330

CEYLON
United Electricals Ltd.
P.O. Box 681
Yahala Building
Staples Street
Colombo 2
Tel: 5496
Cable: HOTPOINT Colombo

CYPRUS
Kypronics
19-19D Hommer Avenue
P.O. Box 752
Nicosia
Tel: 6282-75628
Cable: HE-I-NAMI

ETHIOPIA
African Salespower & Agency Private Ltd., Co.
P. O. Box 718
58/59 Cunningham St.
Addis Ababa
Tel: 12285
Cable: ASACO Addisababa

HONG KONG
Schmidt & Co. (Hong Kong) Ltd.
P.O. Box 297
1511, Prince's Building
10, Chater Road
Hong Kong
Tel: 240168, 232735
Cable: SCHMIDTCO Hong Kong

INDIA
The Scientific Instrument Co., Ltd.
6, Tej Bahadur Sapru Road
Allahabad 1
Tel: 2451
Cable: SICO Allahbad

The Scientific Instrument Co., Ltd.
12/5 Dickenson Road
Bangalore -1
Cable: SICO Bangalore

The Scientific Instrument Co., Ltd.
240, Dr. Dadabhai Naoroji Road
Bombay 1
Tel: 26-2642
Cable: SICO Bombay

The Scientific Instrument Co., Ltd.
11, Esplanade East
Calcutta 1
Tel: 23-4129
Cable: SICO Calcutta

The Scientific Instrument Co., Ltd.
30, Mount Road
Madras 2
Tel: 86339
Cable: SICO Madras

The Scientific Instrument Co., Ltd.
17, Kamalnayan Society
P.O. Navajiwan
Ahmedabad 14
Cable: SICO, Ahmedabad

The Scientific Instrument Co. Ltd.
5-8-525 Mahatma Gandhi Road
Hyderabad-1 (A-P) India
Cable: SICO Hyderabad

The Scientific Instrument Co., Ld.
B-7, Ajmeri Gate Extn.
New Delhi 1
Tel: 27-1053
Cable: SICO New Delhi

INDONESIA
Bah Bolon Trading Coy. N.V.
Djalah Merdeka 29
Bandung
Tel: 4915 51560
Cable: ILMU
Telex: 809

IRAN
Telecom, Ltd.
P. O. Box 1812
240 Kh. Saba Shomali
Teheran
Tel: 43850, 48111
Cable: BASCOM Teheran

ISRAEL
Electronics & Engineering Div. of Motorola Israel Ltd.
17 Aminadav Street
Tel-Aviv
Tel: 36941 (3 lines)
Cable: BASTEL Tel-Aviv
Telex: Bastel Tv 033-569

JAPAN
Yokogawa-Hewlett-Packard Ltd.
Nisei Ibaragi Bldg.
2-2-8 Kasuga
Ibaragi-Shi
Osaka
Tel: 23-1641

Yokogawa-Hewlett-Packard Ltd.
Ito Building
No. 59, Kotori-cho
Nakamura-ku, **Nagoya** City
Tel: 551-0215

Yokogawa-Hewlett-Packard Ltd.
Ohashi Building
59 Yoyogi 1-chrome
Shibuya-ku, **Tokyo**
Tel: 370-2281/7
Telex: 232-2024YHP
Cable: YHPMARKET TOK 23-724

KENYA
R. J. Tilbury Ltd.
P. O. Box 2754
Suite 517/518
Hotel Ambassadeur
Nairobi
Tel: 25670, 68206, 58196
Cable: ARJAYTEE Nairobi

KOREA
American Trading Co., Korea, Ltd.
P.O. Box 1103
Dae Kyung Bldg.
107 Sejong Ro
Chongro Ku
Seoul
Tel: 75-5841 (4 lines)
Cable: AMTRACO Seoul

LEBANON
Constantin E. Macridis
Clemenceau Street
P.O. Box 7213
Beirut
Tel: 220846
Cable: ELECTRONUCLEAR Beirut

MALAYSIA
MECOMB Malaysia Ltd.
2 Lorong 13/6A
Section 13
Petaling Jaya, **Selangor**
Cable: MECOMB Kuala Lumpur

MOZAMBIQUE
A. N. Goncalves, LDA.
4.1 Apt. 14 Av. D. Luis
P.O. Box 107
Lourenco Marques
Cable: NEGON

NEW ZEALAND
Hewlett-Packard (N.Z.) Ltd.
32-34 Kent Terrace
P.O. Box 9443
Wellington, N.Z.
Tel: 59-559
Cable: HEWPACK Wellington

PAKISTAN (EAST)
Mushko & Company, Ltd.
Zirat Chambers
31, Jinnah Avenue
Dacca
Tel: 280058
Cable: NEWDEAL Dacca

PAKISTAN (WEST)
Mushko & Company, Ltd.
Oosman Chambers
Victoria Road
Karachi 3
Tel: 511027, 512927
Cable: COOPERATOR Karachi

PHILIPPINES
Electromex Inc.
2129 Pasong Tamo
Makati, Rizal
P.O. Box 4326
Manila
Tel: 88-91-71 or 88-83-76
Cable: ELEMEX Manila

SINGAPORE
Mechanical and Combustion Engineering Company Ltd.
9, Jalan Kilang
Singapore, 3
Tel: 642361-3
Cable: MECOMB Singapore

SOUTH AFRICA
Hewlett Packard South Africa (Pty.), Ltd.
Hill House
43 Somerset Rd.
Cape Town
Tel: 3-6019
Cable: HEWPACK Cape Town
Telex: 7038CT

Hewlett Packard South Africa (Pty.), Ltd.
P.O. Box 31716
30 De Beer Street
Braamfontein, **Johannesburg**
Tel: 724-4172 724-4195
Telex: 0226 JH
Cable: HEWPACK Johannesburg

TAIWAN REP. OF CHINA
Hwa Sheng Electronic Co., Ltd.
P. O. Box 1558
Room 404
Chia Hsin Building
No. 96 Chung Shan North Road, Sec. 2
Taipei
Tel: 555211 Ext. 532-539 545936, 546076, 548661
Cable: VICTRONIX Taipei

TANZANIA
R. J. Tilbury Ltd.
P.O. Box 2754
Suite 517/518
Hotel Ambassadeur
Nairobi
Tel: 25670, 26803, 68206, 58196
Cable: ARJAYTEE Nairobi

THAILAND
The International Engineering Co., Ltd.
P. O. Box 39
614 Sukhumvit Road
Bangkok
Tel: 910722 (7 lines)
Telex: INTENCO BK 226
Cable: GYSOM BANGKOK

UGANDA
R. J. Tilbury Ltd.
P.O. Box 2754
Suite 517/518
Hotel Ambassadeur
Nairobi
Tel: 25670, 26803, 68206, 58196
Cable: ARJAYTEE Nairobi

VIETNAM
Peninsular Trading Inc.
P.O. Box H-3
216 Hien-Vuong
Saigon
Tel: 20.805
Cable: PENINSULA Saigon

ZAMBIA
R. J. Tilbury (Zambia) Ltd.
P.O. Box 2792
Lusaka
Zambia, Central Africa

FOR AREAS NOT LISTED, CONTACT:
Hewlett-Packard INTERCONTINENTAL
3200 Hillview Ave.
Palo Alto, California 94304
Tel: (415) 326-7000
TWX: 910-373-1267
Cable: HEWPACK Palo Alto
Telex: 034-8461

Artisan Technology Group - Quality Instrumentation ... Guaranteed | (888) 88-SOURCE | www.artisantg.com

MANUAL BACKDATING CHANGES

MODEL 427A

VOLTMETER

This manual backdating sheet makes this manual applicable to earlier instruments. Instrument-component values that differ from those in the manual, yet are not listed in the backdating sheet, should be replaced using the part number given in the manual.

Instrument Serial Prefix	Make Manual Changes	Instrument Serial Prefix	Make Manual Changes
731- and below	Change 1 thru 4	All	Change 5
550- and below	Change 2 thru 4		
621- and below	Change 3 and 4		
below 0947A11451	Change 4		

CHANGE 1 — Page 7-4: Replaceable Parts OPTION 01:

Change J1 to -hp- Part No. 1251-0148.
Change S3 to -hp- Part No. 3101-0033.
Change W1 to -hp- Part No. 8120-0078.
Change MP3 to -hp- Part No. 00427-00203.

CHANGE 2 — Table 7-1, Replaceable Parts:

Change MP9, front panel, to -hp- Part No. 00427-00201.
Add MP12, bracket, DC ZERO/Ω∞ adjust, -hp- Part No. 00427-01201.

CHANGE 3 — Schematic Diagram and Replaceable Parts:

Remove resistor A1R22 (390 Ω) from collector of A1Q4.

NOTE

A Printed Circuit Board 00427-66501 with revision c or beyond has A1R22 added in collector circuit of A1Q4. Resistor A1R22 was added to reduce power dissipation in A1Q4 during overload.

CHANGE 4 — Change A2R17 to 2100-2069, R: var ww 1000 ohms ± 20% 1-1/2 W.

CHANGE 5 — The cover panels and trim listed on Page 7-4 are for brown instruments. Parts for blue instruments are listed below.

MP1	Cover: top	5060-5918
MP4	Cover: side	5000-0702
MP8	Cover: bottom	5000-8569
MP10	Meter trim	5020-6852

Artisan Technology Group - Quality Instrumentation ... Guaranteed | (888) 88-SOURCE | www.artisantg.com

HEWLETT hp PACKARD

00427-90005

Artisan Technology Group - Quality Instrumentation ... Guaranteed | (888) 88-SOURCE | www.artisantg.com

PRINTED IN U.S.A.