DIP METER

DM-801

CONTENTS:

INTRODUTCION 3
FEATURES 5
SPECIFICATIONS 6
CONTROLS 7
PRECAUTIONS 8
APPLICATIONS: 10
(A) USE AS A DIP METER 10
(B) OTHER FREQUENCY MEASUREMENTS . . . 10
(C) USE AS A SIGNAL GENERATOR 12
(D) USE AS A CRYSTAL CHECKER AND MAKER GENERATOR 13
(E) USE AS A ABSORPTION FREQUENCY METER 14
(F) USE AS A FIELD-STRENGTH METER 15
(G) CAPACITANCE AND INDUCTANCE MEASUREMENTS 15
ADJUSTMENT 17
PARTS LIST 18
P.C. BOARD 21
SCHEMATIC DIAGRAM 23

INTRODUCTION

A dip meter is used for adjustment of radio equipment and antennas.

The **DM-801** is a self-excited oscillator designed for external coupling to the equipment being tested.

It features both inductive and capacitive coupling for measuring enclosed coils and toroidal coils (patent pending). This is not possible with conventional testing instruments.

The **DM-801** has the following two functions:

(1) Inductive coupling (Fig. 1A)

As shown (Fig. 1A), place the coil unit of the dip meter in close proximity to the circuit being measured.

Adjust the dial. When the dip meter oscillation frequency coincides with the resonant frequency (tuned circuit), oscillating energy is absorbed by the circuit, thus decreasing the oscillation strength.

This strength is indicated on the meter. The pointer swings back momentarily at the resonant point. Since the meter pointer dips at a tuned point, this instrument is called a dip meter.

(2) Capacitive coupling (Fig. 1B)

This is special feature of the **DM-801** which is not found in any other dip meter. Resonant frequency can be checked simply by touching the capacitance probe to hot side of the resonant circuit under test, instead of coupling the **DM-801**'s coil and measuring inductively. The frequency is read directly on the dial. See Fig. 1 (B).

Radio equipment is miniaturized and most coils are enclosed in metal shields. Also, toroidal coils are used in many types of radio equipment, and these coils do not couple to conventional dip meters. The **DM-801** has solved this problem.

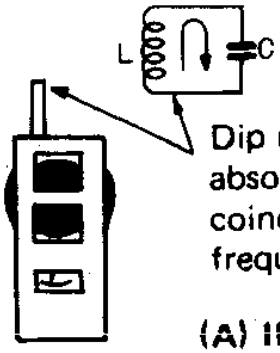

Dip meter oscillation energy is absorbed where its frequency coincides with resonant circuit frequency under measurement.

(A) INDUCTIVE COUPLING

Meter pointer deflection

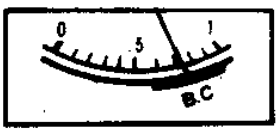

Oscillation frequency differs from resonant circuit frequency.

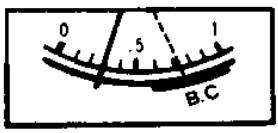

Oscillation frequency coincides with resonant circuit frequency.

Touch the hot side of the resonant circuit with the capacitive probe.

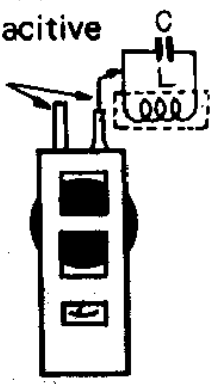

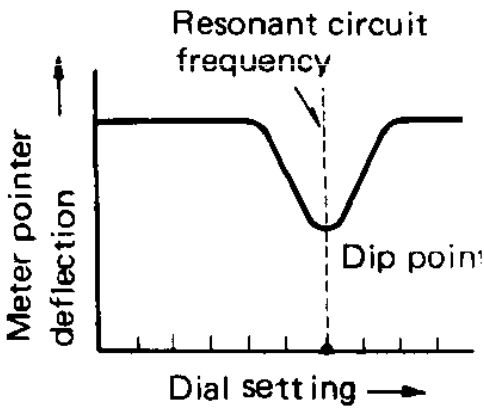

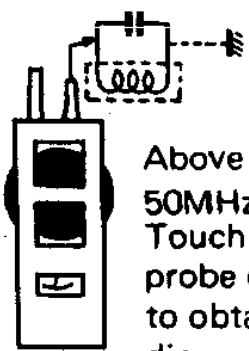

Above 50MHz Touch the probe only to obtain a dip.

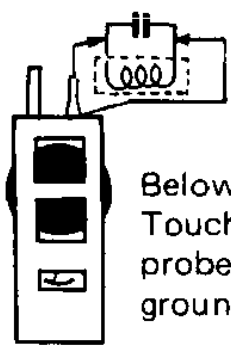

Below 50MHz Touch the probe, and a ground clip.

(B) CAPACITIVE COUPLING

Figure 1. Dip Meter Operation

FEATURES

1. Measurable frequency range is 700kHz to 250MHz in seven bands.
2. All seven dip meter coils, capacitive probe, earphone and ground clip lead, can be carried within the unit for easy transport and storage.
3. Convenient for both in indoor and outdoor measurements; all solid-state and built-in battery.
4. HC-25U and FT-243 sockets enable use as a crystal checker and marker generator.
5. Amplitude modulation is convenient in aligning receivers when using your **DM-801** as a signal generator. Also, when used as the marker generator, amplitude modulation is helpful in precisely calibrating the dial scale even for a receiver having no BFO.
6. An FET and transistor are used in the meter circuit to provide extremely good sensitivity.
7. As an absorption frequency meter, your **DM-801** is both to align transmitters and measure field strength.
8. An earphone plug allows you to monitor transmit signals.
9. A capacitive probe allows measurements without removing coil shields.
10. It is possible to measure resonant circuit frequencies of toroidal coils. This is not possible with conventional dip meters.

SPECIFICATIONS

Frequency range:	700kHz – 250MHz ±3%
	A band 0.7–1.6MHz
	B band 1.5–3.6MHz
	C band 3.0–7.4MHz
	D band 6.9–17.5MHz
	E band 17–42MHz
	F band 41–110MHz
	G band 83–250MHz
Modulation:	1kHz (sine wave)
Power requirements:	Battery, 9V(006P)
Power consumption:	9 mA
Semi-conductors:	1 FET, 3 transistors, 3 diodes
Crystal oscillator element to be used:	HC-25U and FT-243
RF search terminal:	For measuring resonant frequency (capacitive coupling) and checking RF voltage using the supplied probe.
Earphone terminal:	Accepts crystal earphone with 3.5ϕ plug for monitoring modulated tone.
Dimensions:	70W x 180H x 45D (mm)
Weight:	Approx. 690g (with accessories)
Accessories:	(1) Coils, A-G bands . . . . .7 pieces
	(2) Probe . . . . . .1 piece
	(3) Ground clip . . . . . .1 piece
	(4) Crystal earphone . . . . .1 piece
	(5) Battery, 006P . . . . . .1 piece

CAUTION: Do not apply a voltage exceeding 500V (DC peak) to the probe.

CONTROLS

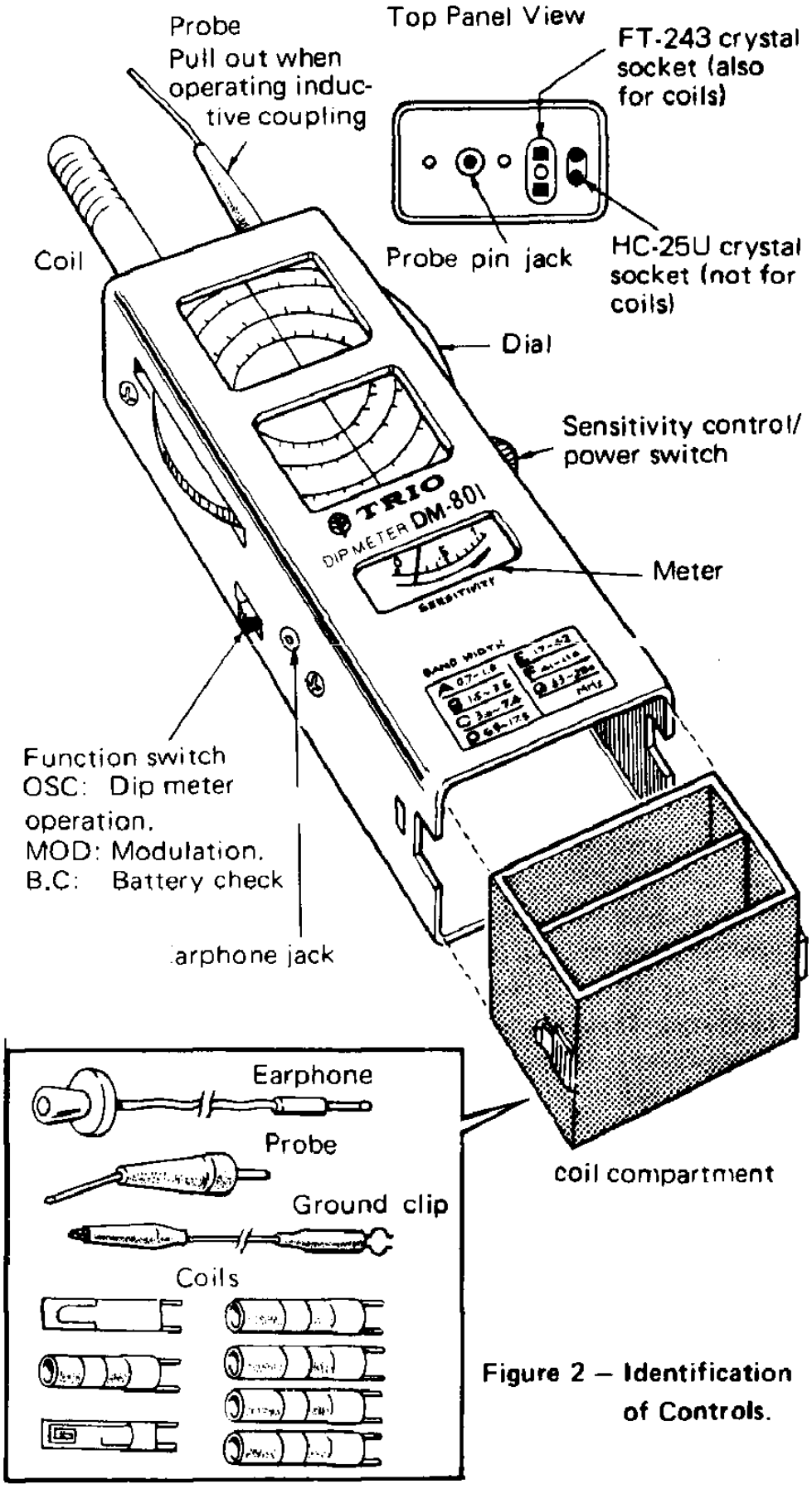

Figure 2 — Identification of Controls.

PRECAUTIONS

1. Battery and Oscillation Coil Loading

Taking the coil compartment out, you will find a battery snap connector inside the unit. Fit the snap to the battery. First lay the battery take-out ribbon into the battery holder, then install the battery in place. Place the supplied oscillation coils into the coil compartment and reinstall into the dip meter main body.

Verify that the battery is serviceable before operating your **DM-801**. First, turn the POWER switch on. Set the FUNCTION switch to "BATT CHECK". The battery is usable as long as the meter pointer is within the "B.C" zone. A low battery results in weak or unstable oscillation, no oscillation, or frequency error. Replace the battery when weak.

After use, be sure to turn the POWER switch off. If your **DM-801** will not be used for a long period of time remove the battery. You can easily remove it by pulling the take-out ribbon toward you. Never remove the case screws.

2. Obtaining a Dip Point

The closer the dip meter is brought to the resonant circuit being checked, the tighter the two are coupled and the deeper the dip point. However, the tuning point becomes so broad that you cannot find the correct resonant frequency. Therefore, it is advisable to move the dip meter a little away from the circuit.

Note that the A band has a large pull-in effect and therefore the dip point is broad.

3. Measuring Transistor Resonant Circuits

There is no load problem in measuring vacuum tube resc circuits. In measuring some resonant (tuning) circu transistorized transmitters and receivers, the resonant ; cannot always be found by dipping load. In this event, porarily disconnect the transistor or operate the give sonant circuit with power on and measure by absorption

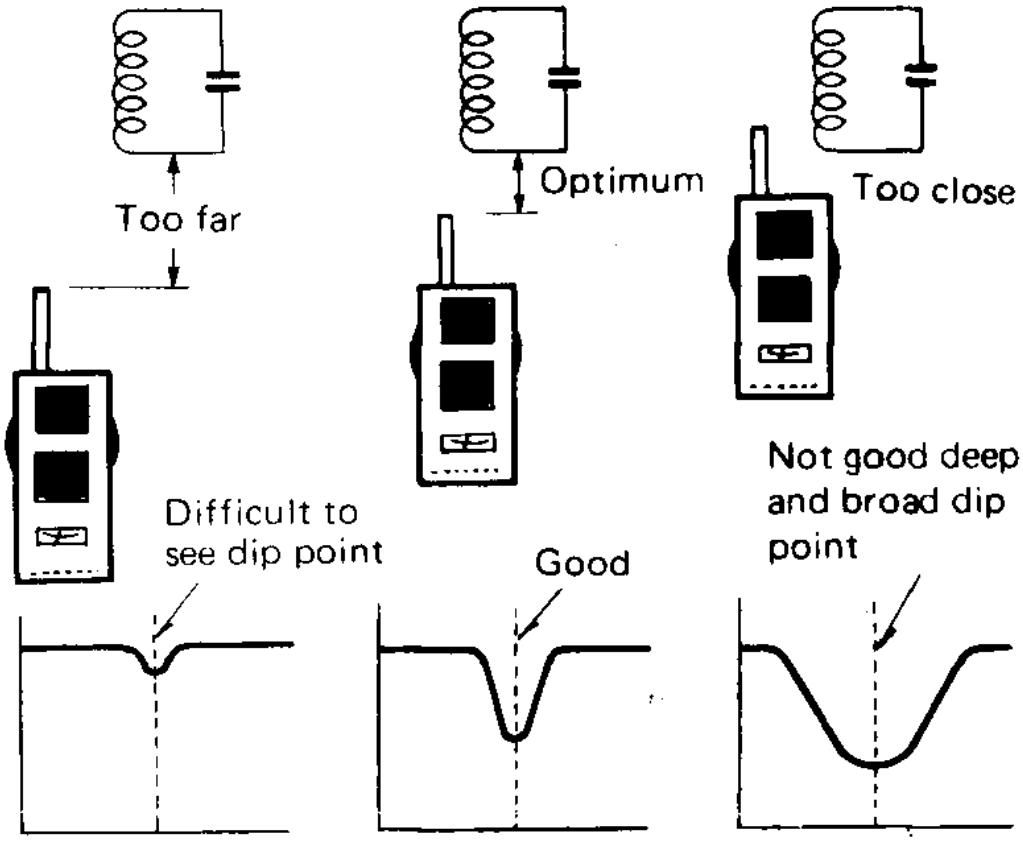

Figure 3 — Distance Adjustment for Accurate Dip Point

4. Caution in Measuring Transmitters

Your **DM-801** is usable as an absorption frequency meter in measuring transmitter power amplifier tank circuits, and similar stages producing high RF energy. In measurement, do not abruptly bring the dip meter close to the circuit as the transistors and other parts in the dip meter could be destroyed by excess RF energy. Bring it near the circuit slowly while observing the meter pointer.

5. Caution in Meter Pointer Deflection Change

The meter pointer may swing slightly as if indicating a dip. This results from a variation in oscillation signal strength while tuning the oscillator variable capacitor. Move the dip meter coil away from the circuit under measurement. The meter pointer will return to full scale for a real dip.

APPLICATIONS

A. Use as a Dip Meter

1. Select an oscillation coil covering the desired frequency range.
2. Install the coil into the socket on top of the dip meter.
3. Set the FUNCTION switch to "OSC".
4. Turn the power on.
5. Turn the SENSITIVITY control until the meter pointer reads at division 0.7. If not to division 0.7, turn the control fully counter-clockwise.
6. Bring the dip meter coil about 1 cm from the tuned circuit to be measured and slowly turn the dial. The oscillator signal energy will be absorbed by the tuned circuit at the resonant point and the meter will dip abruptly.
   (see Figure 3)
   Note: At first, couple the dip meter coil tightly to the given tuned circuit so that you can easily find the dip point. Then, bring the oscillation coil away until the dip is as narrow as possible, and readjust the dial precisely for accurate dip point. Now read the correct frequency on the dial.

B. Other Frequency Measurements

(1) Resonant circuit measurement

A basic measurement with your DM-801 is a frequency check of resonant (tuned) circuits comprised of coils and capacitors. In practice, the dip meter is brought near the coil to be measured as shown in Figure 1(A). This illustrates a standard method of resonant frequency measurement.

(2) Use of the capacitive probe

If a coil to be measured is located in a narrow place and cannot be coupled the dip meter coil, or if a coil is enclosed in a shield, the probe can be used for accurate measurement. See Figure 4.

The dip point can be obtained by using the ground clip and probe for frequencies of about 50MHz or lower, and the probe only for about 50MHz and higher. Toroidal coils can be measured in the same manner. Note that the probe should be connected to the hot side (not the ground side) of the circuit. See connections (a) through (c) in the illustration. The dip point is sometimes critical depending on the circuit or frequency to be measured. An accurate dip point can be

capacitor

Ground clip

Toroidal coil

(b) Ground clip

Probe

(a)

(c)

Figure 4: Use of the probe

1 ~ 2 turns

Antenna element

Center insulator

Alligator clip

Clip lead

Figure 5 – Antenna Resonant Frequency Measurement.

(3) Antenna resonant frequency measurement

Any antenna can be regarded as a kind of resonant circuit. Its resonant frequency, therefore, can be measured as illustrated in Figure 5. For measurement, connect a one-turn coil to the feed point at the center of the antenna.

Couple it with the dip meter coil. Now, you can obtain the antenna resonant frequency in a similar manner to APPLICATIONS Section A. For a vertical antenna or similar antennas for which the other feeder lead is grounded, place the one-turn coil between the antenna and ground.

Couple the one-turn coil to the dip meter until a dip point is obtained. Then, slowly separate the coil to measure the resonant frequency accurately.

C. Use as a Signal Generator

Your DM-801 can be used as a signal generator for aligning receivers and similar equipment. Couple the dip meter to the antenna circuit of the receiver as illustrated in Figure 6. The dip meter output carrier will enter the receiver. For aligning an AM receiver, set the FUNCTION switch to "MOD". The receiver will sound a 1kHz tone. Aligning SSB and CW receivers can be achieved, by leaving the switch at "OSC" for no modulation. Adjust the capacitor trimmers and inductor cores for maximum receiver "S" meter reading or maximum speaker output.

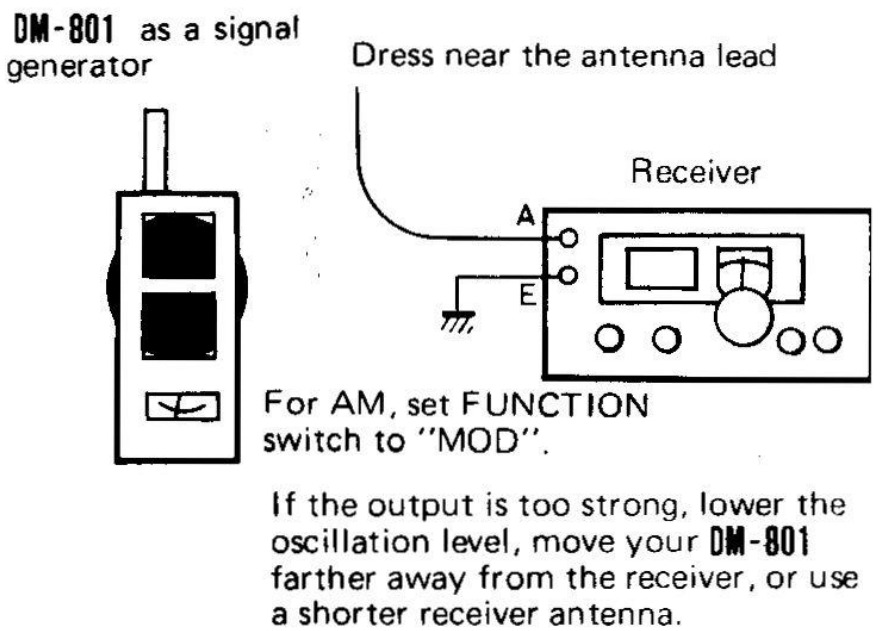

Figure 6 — Use as a Signal Generator.

D. Use as Crystal Checker and Marker Generator

Your **DM-801** can be modified as a crystal checker by installing a crystal in place of the oscillation coil (see Figure 7).

You may use either HC-25U or FT-243 crystals. Also, an HC-6U crystal can be checked if plugged into the FT-243 socket. The oscillation signal strength may vary depending on the type and frequency of the crystal used. Adjust the dial for most stable oscillation.

In addition, your **DM-801** is applicable as a marker generator by installing a marker crystal of 1MHz, 3.5MHz, or the like. The marker generator is useful for calibrating a receiver dial.

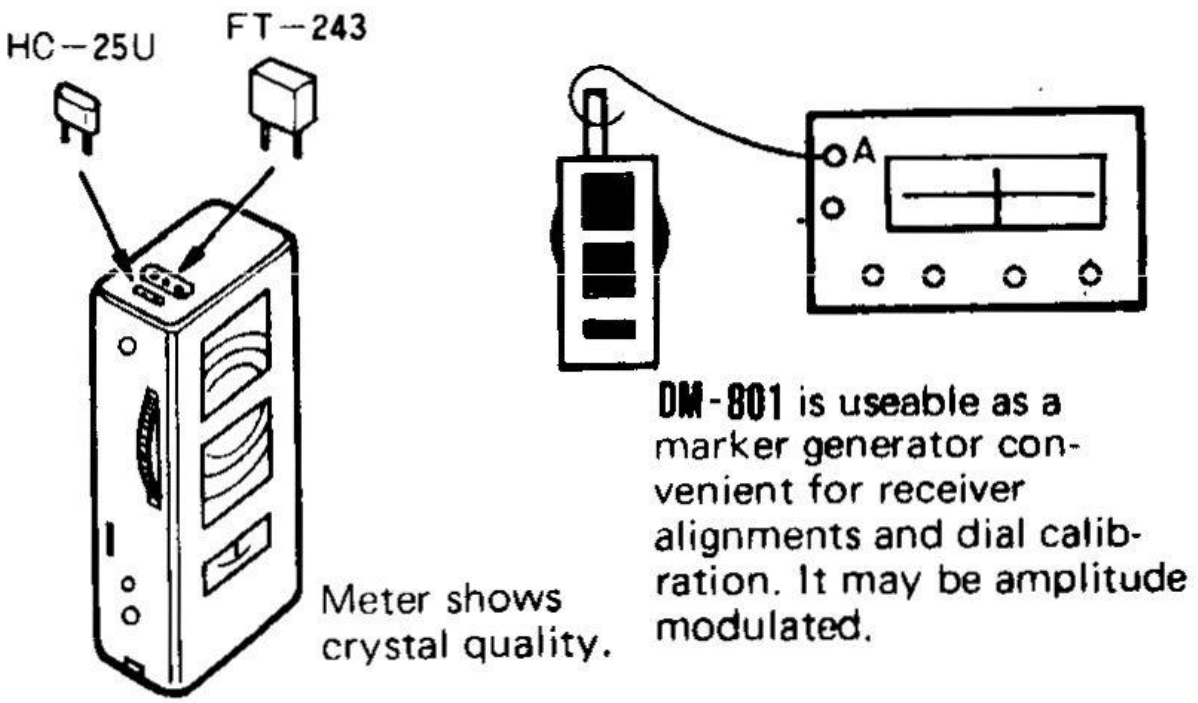

(a) Checking crystal **(b) Use as a marker generator.**

Figure 7 — Use as a Crystal-Controlled Signal Generator.

E. Use as an Absorption Frequency Meter

Install an oscillation coil covering the desired frequency range into the socket. Turn the SENSITIVITY control ON and adjust to the minimum meter deflection (just before the OFF position of the control), and set the FUNCTION switch to OSC. You can now use your **DM-801** as an absorption frequency meter to receive external energy and indicate its frequency on the meter.

Figure 8a shows how to measure oscillator frequency. The oscillator coil is coupled with, or brought near, the absorption frequency meter coil. Adjust the dial for maximum meter deflection and read the oscillation frequency. Figure 8b shows the absorption frequency meter coupled to a transmitter tank coil. Its radiated energy can be measured in a similar manner to that of Figure 8a.

CAUTION: A transmitter power amplifier stage produces high RF energy. The absorption frequency meter should be brought near the tank coil slowly so the meter pointer does not deflect off scale. The earphone allows you to monitor modulation.

WARNING: Tube type power amplifiers operate at high RF and DC potentials. Transistorized power amps also produce high RF levels. Observe normal safety procedures for high RF and DC circuits.

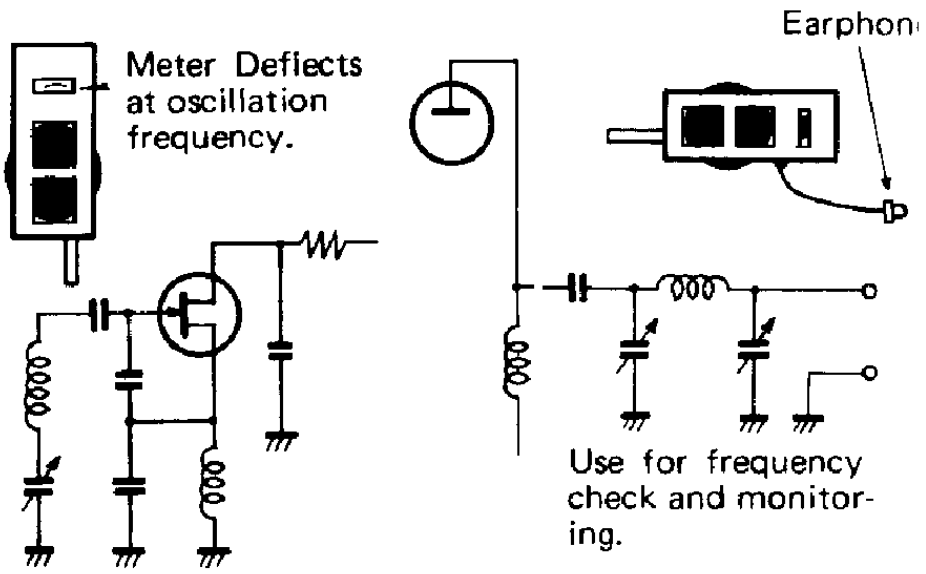

a. Checking oscillation frequency

b. Checking transmission frequency

Figure 8 — Use as Absorption Frequency Meter.

F. Use as a Field-Strength Meter

Your **DM-801** can be used to measure the field strength of a transmit antenna. Set up as directed in APPLICATIONS, "Use as Absorption frequency meter". In addition, couple to an antenna as in Figure 9. You can now measure field strength. This application is convenient for transmit antenna matching, radiation pattern adjustments, and similar uses.

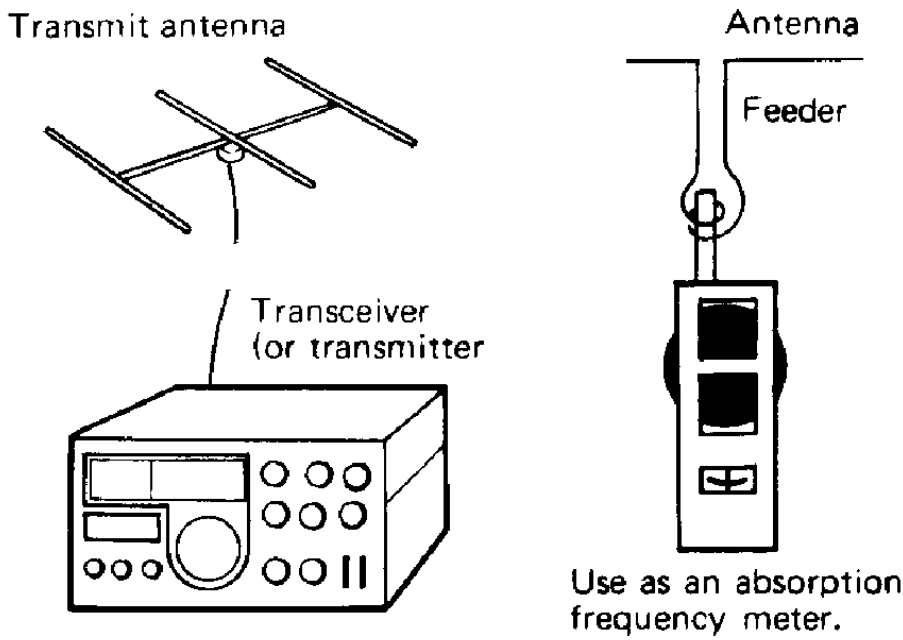

Figure 9 — Use as Field-Strength Meter.

G. Capacitance and Inductance Measurements

The value of unknown inductor can be obtained in combination with known capacitor by their resonant frequency, as illustrated in Figure 10. Likewise the value of an unknown capacitor can be calculated. The inductance (L), capacitance (C), and resonant frequency (f) are related as:

$$f = \frac{1}{2\pi\sqrt{LC}}$$

This formula can be rewritten as

$$Lx = \frac{25{,}400}{f^2 C} \qquad Cx = \frac{25{,}400}{f^2 L}$$

Where

L = inductance in μH

C1 = capacitance in pF

f = frequency in MHz

An inductance or capacitance can easily be calculated by sut stituting the known values into the above equations.
The oscillation coils supplied with your **DM-801** are useful as th known inductor. Their inductances are:

BAND	A	B	C	D	E	F	
INDUCTANCE (μH)	1,250	160	39	8.4	1.2	0.22	.047

a. Inductance measurement. **b. Capacitance measurement**

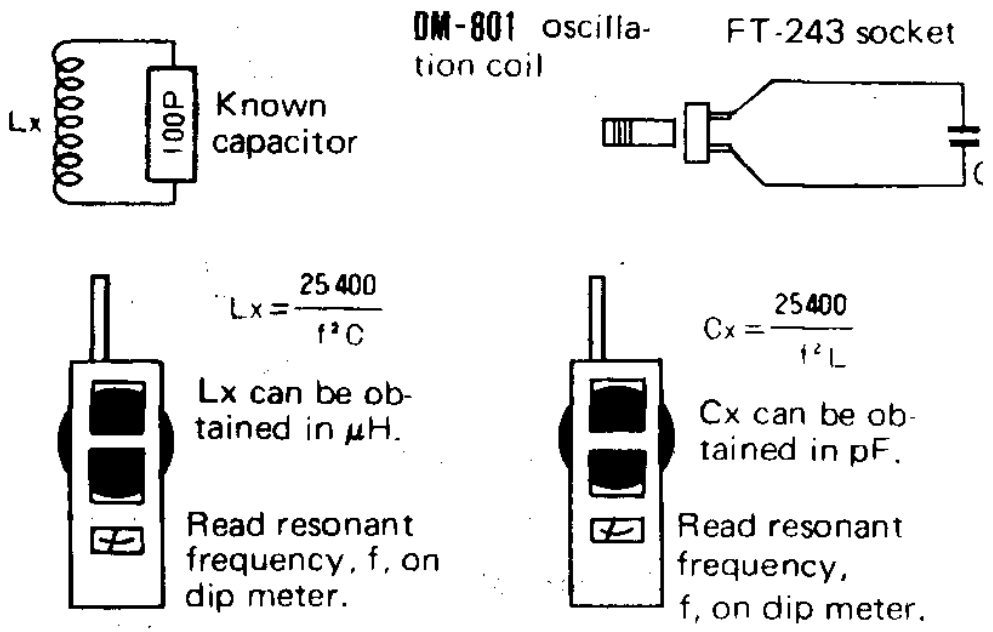

Figure 10 — Inductance and Capacitance Measurements.

In addition to all these applications, your **DM-801** is usa place of a receiver local oscillator in repairing or allignmen is effective in other services as well. Also, your **DM-801** car as a BFO for a receiver without one in receiving a CW o signal. It is useful in a wide variety situations. By fully ι standing the principles of operation your **DM-801**'s capat may be extended to other applications.
For an additional source of general information, the amateur's handbook is recommended.

ADJUSTMENT

VR1: Q1 Bias adj.

By using G band, adjust VR1 so that the meter pointer deflectior is maximum at 83MHz.

VR2: Meter zero adj.

Adjust VR2 so that the meter deflection is zero when the sensitivity control/power switch is set to just before the OFF position of the control.

VR3: Sensitivity adj.

Optimum position.

VR4: Battery voltage check adj.

Adjust VR4 so that the meter deflection come to the left edge of the "B,C" zone at 7V when the FUNCTION switch is set tc

PARTS LIST
MAIN CHASSIS

Ref. No.	Parts No.	Description
	A01-0859-08	Case top
	A01-0860-08	Case bottom
	A09-0506-08	Coil case
	A10-0471-28	Chassis
	A29-0502-08	Top panel
	B20-0918-08	Dial scale
	B23-0602-08	Front glass
	B31-0719-08	Meter
	B40-0772-08	Name plate (serial No.)
	B50-2920-00	Instruction manual
	C01-0191-08	Variable capacitor
	E11-0061-08	Pin jack
	E13-0101-05	Phone jack
	E18-0207-08	Crystal socket (FT-243)
	E18-0402-08	Crystal socket (HC-25U)
	E29-0524-08	Probe
	E30-1839-08	Ground clip
	E91-0401-08	Battery snap
	F20-0619-08	Insulating plate
	H01-2914-08	Packing case (Inside)
	H12-0533-08	Pad, (formed styrene)
	H19-0507-08	Accessory box
	H25-0165-08	Polyethylene bag
	H25-0166-08	Polyethylene bag
	J19-0477-08	Battery holder
	J21-1460-08	Coil mounting hardware
	J21-1461-08	Variable capacitor mounting hardware
	J25-1279-08	Printed circuit board
	K29-0254-08	Push-button
	K29-0255-08	Dial

Ref. No.	Parts No.	Description
	L37-0017-08	
	L37-0018-08	
	L37-0019-08	
	L37-0020-08	
	L37-0021-08	
	L37-0022-08	
	L37-0369-08	

C12
C13
R17
VR4

AMP UNIT (X73-1350-00)

Ref. No.	Parts No.	Description			
		RESISTOR			
R11	RD14BB2E563J	Carbon	56KΩ	±5%	1/4W
R12	RD14BB2E124J	Carbon	120KΩ	±5%	1/4W
R13	RD14BB2E683J	Carbon	68KΩ	±5%	1/4W
R14	RD14BB2E472J	Carbon	4.7KΩ	±5%	1/4W
R15	RD14BB2E222J	Carbon	2.2KΩ	±5%	1/4W
R16	RD14BB2E561J	Carbon	560Ω	±5%	1/4W
VR2	R12-2506-08	Semi-fixed resistor	5KΩ		
VR3	R05-3002-08	Variable resistor (with SW)	10KΩB		
		CAPACITOR			
C11	CE04W1C100	Electrolytic	10μF	16WV	
		SEMI-CONDUCTOR			
Q3		FET 2SK19 (GR)			
Q4		Transistor 2SA719			
D3		Zener diode RD-6, 2E			

Ref. No.	Parts No.	Description
		MISCELLANEOUS
	K29-0256-08	Knob
	J25-2888-08	Printed circuit board

HIGH FREQUENCY UNIT (X84-1040-00)

Ref. No.	Parts No.	Description		
		RESISTOR		
R1	RD14BB2E562J	Carbon	5.6KΩ	±5%
R2	RD14BB2E124J	Carbon	120KΩ	±5%
R3	RD14BB2E222J	Carbon	2.2KΩ	±5%
R4	RD14BB2E471J	Carbon	470Ω	±5%
R5	RD14BB2E103J	Carbon	10KΩ	±5%
R6,7	RD14BB2E124J	Carbon	120KΩ	±5%
R8	RD14BB2E103J	Carbon	10KΩ	±5%
R9	RD14BB2E472J	Carbon	4.7KΩ	±5%
R10	RD14BB2E221J	Carbon	220Ω	±5%
VR1	R12-3511-08	Semi-fixed resistor 20KΩB		
		CAPACITOR		
C1	CC45SL1H470J	Ceramic	47 pF	±5%
C2	CC45SL1H030C	Ceramic	3 pF	±0.25pF
C3	CC45SL1H010C	Ceramic	1 pF	±0.25pF
C4	CK45D1H103M	Ceramic	0.01μF	±20%
C5	CK45D1H102M	Ceramic	0.001μF	±20%
C6	CC45SL1H101J	Ceramic	100 pF	±5%
C7	CK4501H102M	Ceramic	0.001μF	±20%
C8~10	CQ92M1H472K	Mylar	4700 pF	±10%
C14	CC45SL1H050C	Ceramic	5 pF	±0.25pF
		SEMI-CONDUCTOR		
Q1		Transistor	2SC1215 (S)	
Q2		Transistor	2SC945 (K)	
D1,2		Diode	1SS16	
		MISCELLANEOUS		
	L33-0262-08	Feri-inductor 2mH		
	J25-2887-08	Printed circuit board		

HIGH FREQUENCY UNIT
(X84-1040-00)

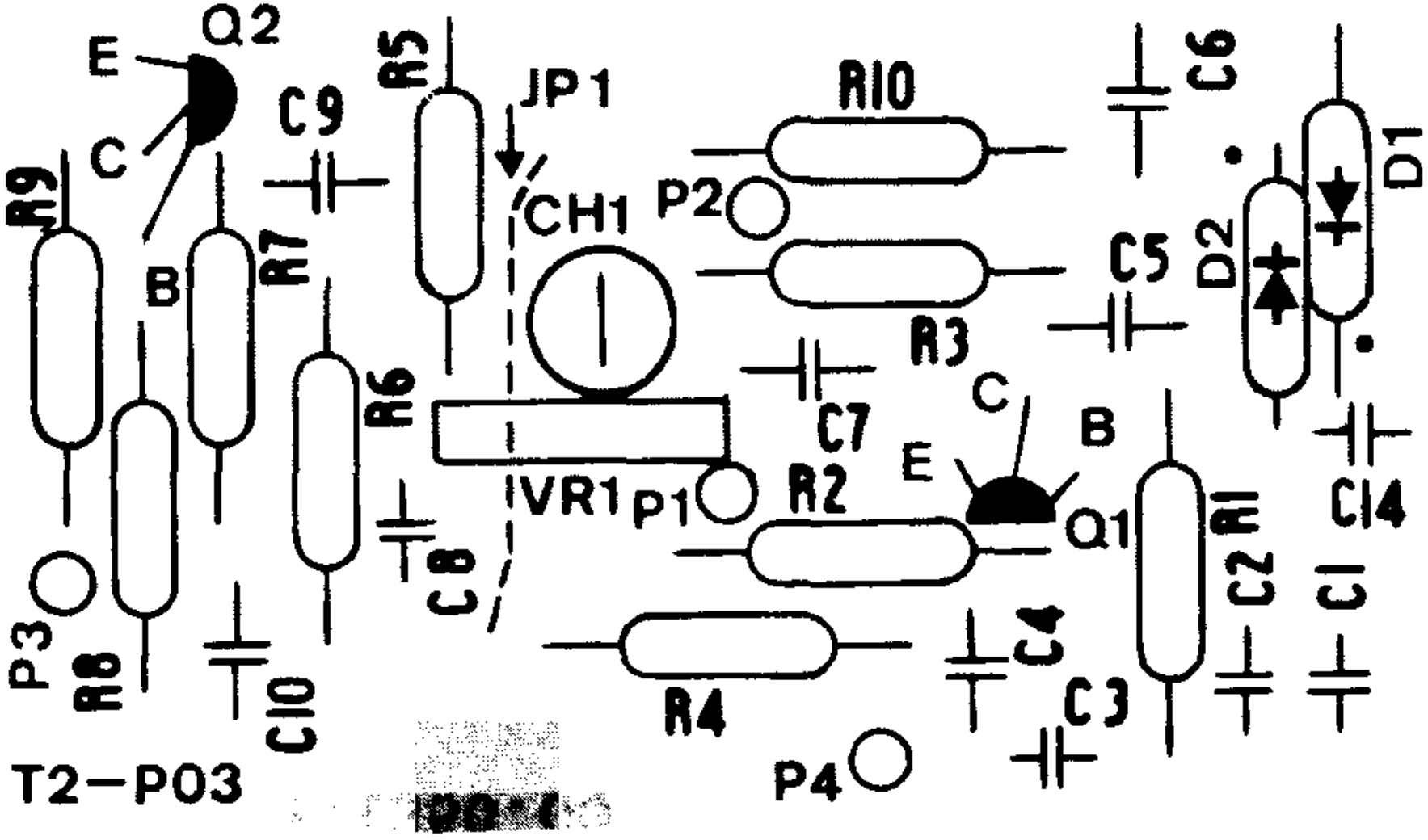

Q1 : 2SC1215
Q2 : 2SC945
D1. 2 : 1SS16

HIGH FREQUENCY UNIT
(X84-1040-00)

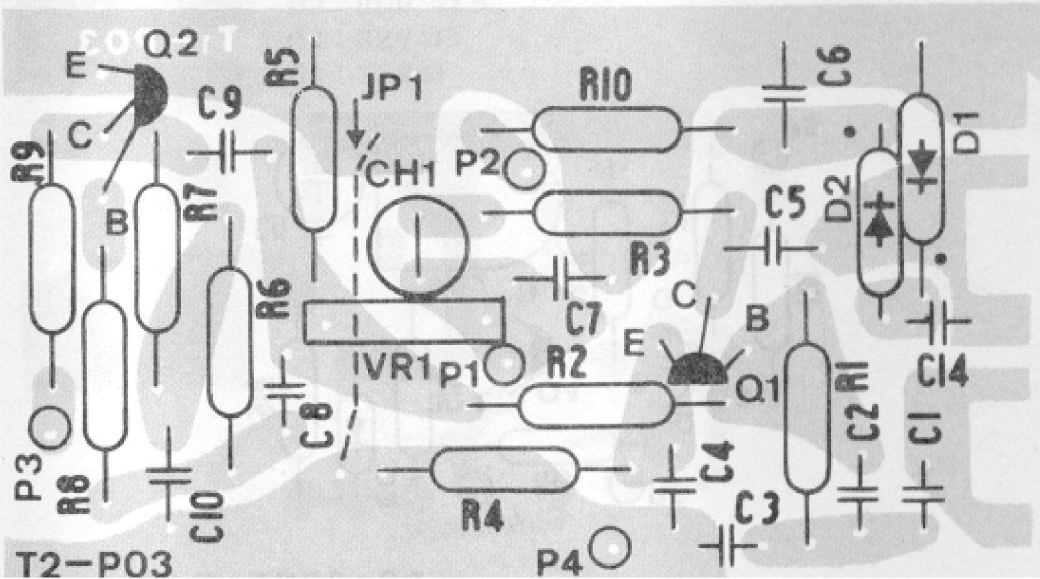

AMP UNIT
(X73-1350-00)

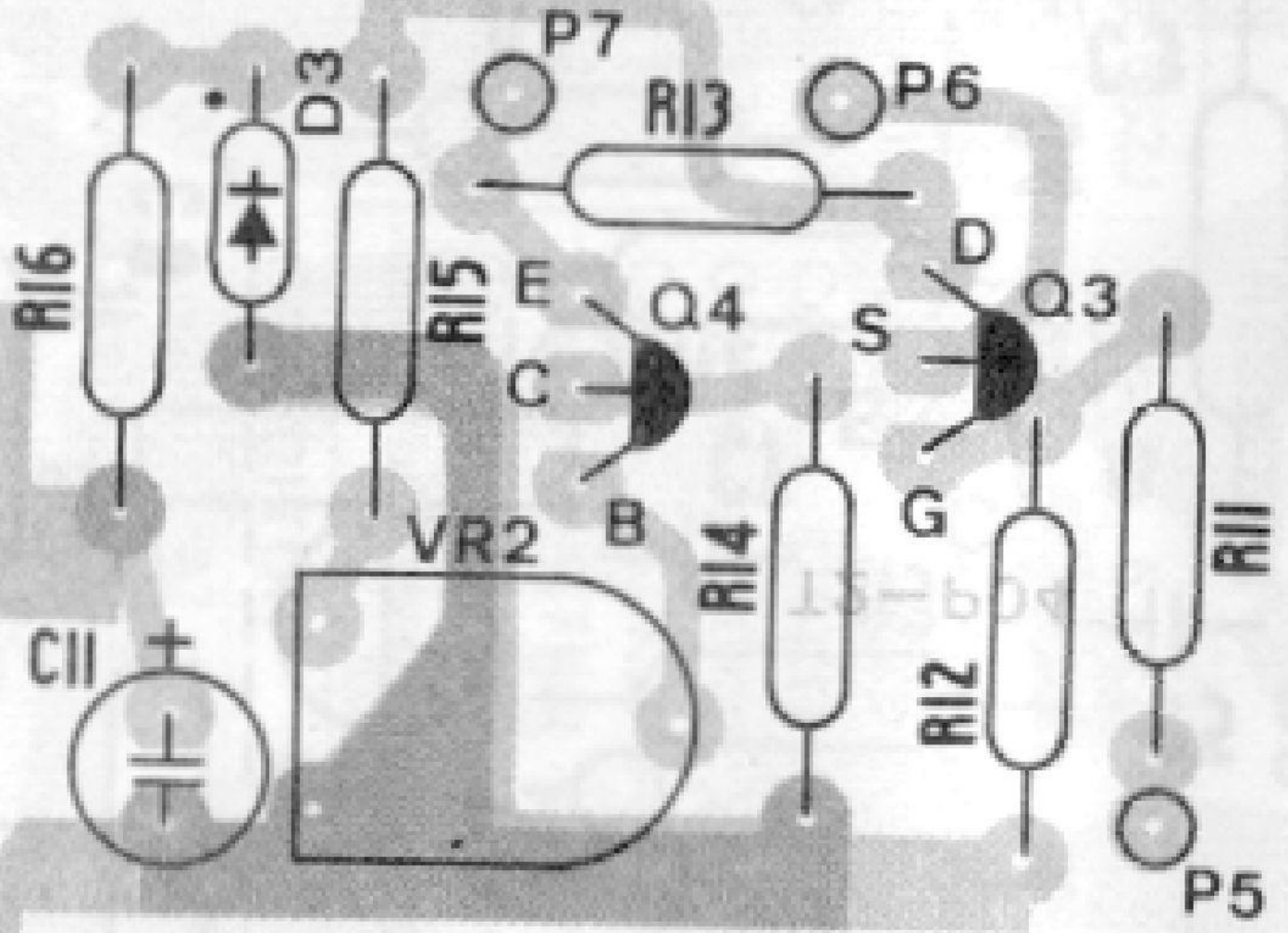

Q3 : 2SK19
Q4 : 2SA719
D3 : RD6, 2EB

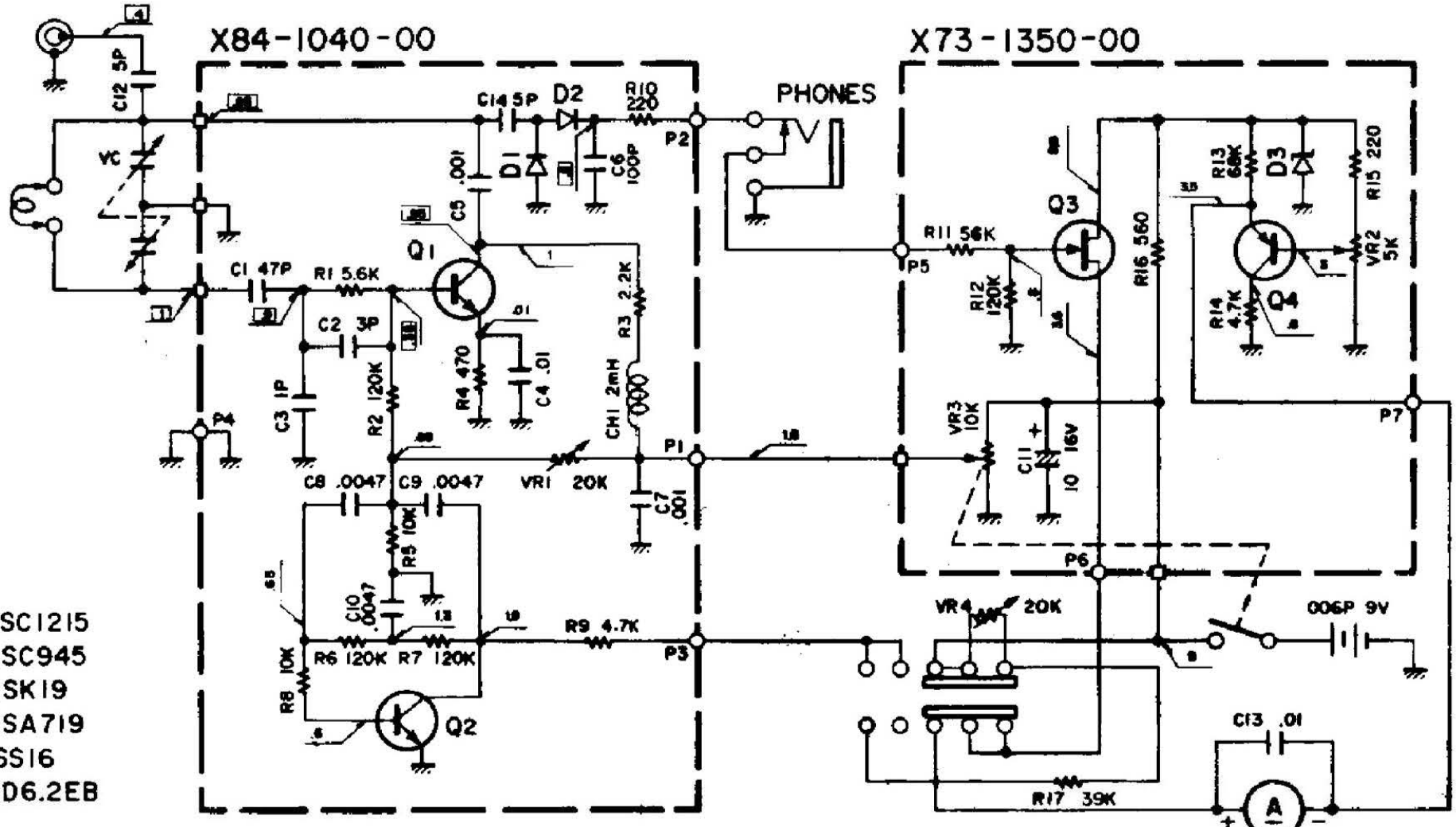

Resistor with no specified value are those of 1/4W and ± 5%. Also, the circuit elements may be changed without notice owing to a technical innovation.

A product of

TRIO-KENWOOD CORP.

6-17 3-chome Aobadai Meguro-ku Tokyo 153 Japan

©06006 PRINTED IN JAPAN B50-2926