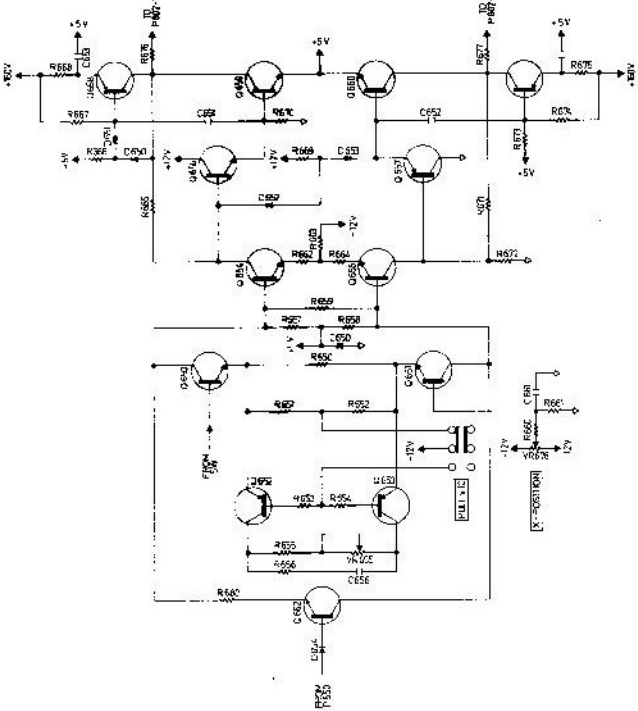
+5V
+12V
-12V
R668
R667
R669
R670
R671
R672
R673
R674
R675
R676
R677
R678
R679
R680
R681
R682
R683
R684
R685
R686
R687
R688
R689
R690
R691
R692
R693
R694
R695
R696
R697
R698
R699
R700
R701
R702
R703
R704
R705
R706
R707
R708