WIDE BAND SIGNAL GENERATOR

# DICK SMITH

Model SG-4160B

# Operation Manual

## CONTENTS


1. SPECIFICATION ..... 1

2. OPERATION ..... 3

3. CURCUIT DIAGRAM ..... 9

## SPECIFICATION

| | | |
|---|---|---|
| Frequency Range | : | A 100KHz – 300KHz |
| | | B 300KHz – 1000KHz |
| | | C 1MHz – 3.2MHz |
| | | D 3.0MHz – 10MHz |
| | | E 10MHz – 35MHz |
| | | F 32MHz – 150MHz |
| | | (up to 450MHz on third-harmonics) |
| Frequency Accuracy | : | ±3% |
| RF Output | : | 100mV. rms. Approx. (up to 35MHz) |
| Output Control | : | HIGH-LOW switch and fine adjuster |
| Modulation | : | Internal 1KHz |
| | | External 50Hz – 20KHz, at less than 1V. RMS. |
| Audio Output | : | 1KHz, MIN. 1V. rms. (fixed) |
| Crystal Oscillator HC-6/u holder | : | For 1 –15 MHz use crystall in Type HC-6u holder (not included) |
| Power Requirement | : | 110V or 220V AC 50Hz or 60Hz |
| Dimension & Weight | : | 150(H) x 250(W) x 130(D)mm. |
| | | approx. 2.5kg. |



DICK SMITH ELECTRONICS RESERVES THE RIGHT TO CHANGE SPECIFICATIONS WITHOUT NOTICE

| | |
|---|---|
| 1. FREQUENCY dial | Set the RF output frequency in the range selected by th |
| 1. FREQUENCY dial | Set the RF output frequency in the range selected by the FREQ RANGE switch. |
| 2. FREQ RANGE switch | Has six positions for RF output frequency range. |
| 3. XTAL socket | For insertion of quartz crystal, 1–15MHz, in Type HC-6/u holder. |
| 4. PWR switch | For turning on the AC power. |
| 5. PILOT lamp | Indicates when Ac power is on. |
| 6.MODE switch | EXT MOD: For modulation of carrier with an external source.<br>INT MOD: Use of internal 1kHz for modulation of external circuit testing.<br>XTAL: Crystal oscillator output Frequency depends on crystal used. |
| 7. INPUT-OUTPUT | For external modulation input or output from internal 1kHz oscillator. |
| 8. FINE control | Continuous RF output voltage adjuster. |
| 9. RF LOW-HIGH switch | Sets the RF output level; at LOW, output is lowered by 10%. |
| 10. OUTPUT terminals | For connection to RF output leads. |

## OPERATION

1. **Preparation**

   (1) Set the POWER switch at OFF.

   (2) Connect the AC plug to the AC supply.

   (3) Connect the RF output leads to OUTPUT terminals.

   (4) Set the FINE control at center and the RF slide switch at LOW.
   During the tests, this switch is set at LOW or HIGH as required.

   (5) Set the FREQ RANGE switch at the operating band and rotate the frequency dial knob to the desired frequency.

2. **Connections**

   The RF leads are connected to the input of the circuit under test. The red terminal is at high potential, or "hot", and black is at earth potential for chassis connection.

   For the RF signal at the receiver antenna input, connect a 50 to 200Ω resistro, 1/4W, in series. When checking sets with a rod antenna, connect leads to a coil with a few turns of wire and couple the coil to the antenna.

   In checking RF and IF amplifier circuits, connection should be made through a small capacitor, 1–5pF, in order to prevent detuning effects.

   NOTE: When connecting directly to the input circuit, make certain the there is no high DC voltage present. Otherwise, connect a blocking capacitor, 0.05μF – 100pF, depending on the frequency.

3. **Modulated Carrier, Internal Source**

Set the mode switch at INT. MOD.

By tuning the receiver to the generator frequency, or vice versa, an audio tone will be heard in the loudspeaker. An audio voltmeter should be connected across the speaker terminals when aligning the internal circuits. A dummy resistor with suitable power rating can be used in place of the moving coil.

It is advisable to keep the RF signal level as low as possible in order to prevent overloading the transistors or electron tubes in the circuit. Excessive input voltage will cause AGC action and/or two resonance points to appear and proper alignment or adjustment would be impossible.

4. **Modulated Carrier, External Source**

Set the mode switch at EXT. MOD.

Connect leads from an external audio generator to the INPUT.

Frequencies up to 15KHz can be used for modulation at RF above 3MHz. The audio input voltage should not exceed 2V; this is to prevent modulation distortion.

5. **Unmodulated Carrier**

Set the mode switch at EXT. MOD. There should be no connection to the INPUT.

The RF signal can be used in testing a receiver equipped with a beat oscillator, or circuits that do not require a modulated signal.

The RF signal can be applied to a sweep generator for the marker signal.

6. **Cryctal Oscillator Output**

Control settings:

Mode switch at XTAL Insert a crystal in FT-243 holder in the XTAL socket.

RF output switch at LOW.

FREQ RANGE switch at "F" and frequency dial at 100KHz.

FINE control at minimum.

The output signal is treated in the same manner as for the unmodulated carrier with the exception that the output level cannot be adjusted.

In certain calibration procedures a short lead near the test circuit will provide sufficient coupling.

NOTE: If an RF signal is required at the same time, set the output frequency with the FREQ RANGE switch and frequency dial as required. Adjust the RF FINE control.

7. **AF Output, 1KHz**

Control settings:

Mode switch at 1NT. MOD.

FREQ RANGE switch at "F" and frequency dial at 100MHz.

Connect leads from OUTPUT to the test circuit. Use an external potentiometer, 100k-1MΩ, to lower the voltage.

8. **Oscillator Frequency Calibration**

The RF oscillator frequency can be calibrated to a high degree of precision using the harmonics of the internal crystal oscillator and an external all-wave receiver. The latter is utilized as a frequency transfer unit.

(1) Set the mode switch at XTAL.

(2) Insert the "standard frequency" crystal, preferably at a multiple of 1MHz. for spot frequency checking, at say 10.7MHz, use a 10.7MHz crystal.

(3) Set the RF slide switch at LOW.
Adjust the FINE control as required.

(4) Connect the RF output to the receiver input, direct or through a small coupling capacitor to the rod antenna.

(5) In the following example, use of a 1MHz crystal will be given.

(6) Tune the receiver to 5MHz, or 5th harmonic of 1MHz. Then by carefully tuning both the oscillator and is adjusted to zero beat and the dial reading is noted. At other frequencies spaced 1MHz apart, the same procedure is repeated, namely, oscillator setting – tuning the receiver – retuning oscillator and noting the reading on the dial.

Practical use of harmonics up to the tenth or higher is possible. However, care must be exercised in selecting the proper harmonic, especially at high RF when a relatively low frequency crystal is used.

NOTE: When a receiver equipped with a beat frequency oscillator is used the measurements can be simplified. The "zero-beat" condition is at the point where the steady beat is heard most clearly.

## 9. Exposing the chassis

REMOVE PLUG FROM POWER SOURCE.

LOOSEN TWO SCREWS AT FRONT PART OF TOP COVER.

REMOVE TWO SCREWS ON THE BOTTOM SIDE.

REMOVE ONE SCREW AT THE BACK.

TAKE OFF THE COVER.

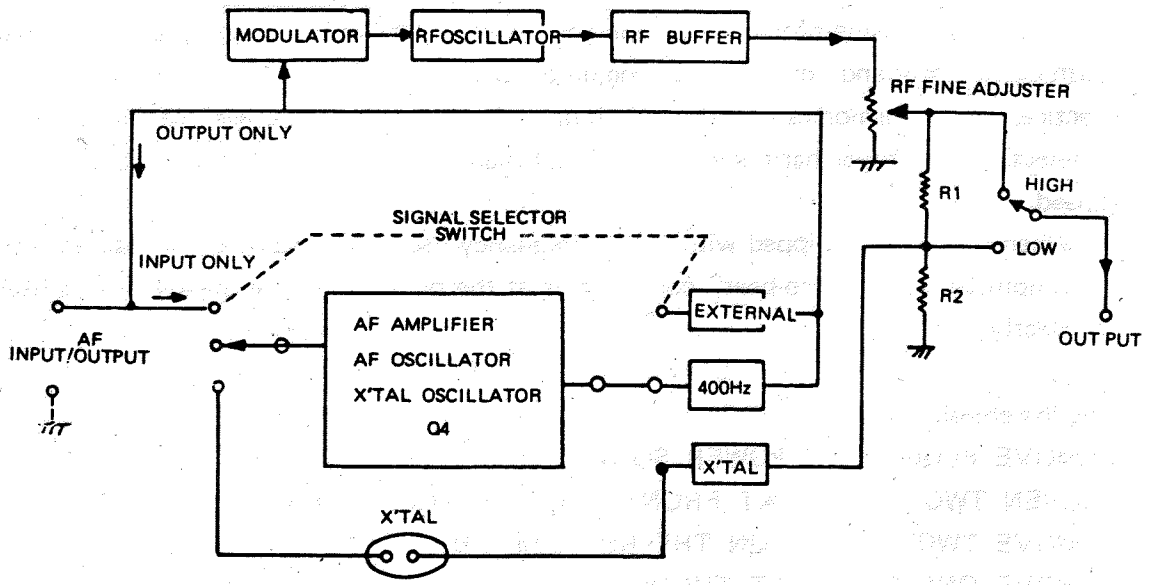
MODULATOR
RFOSCILLATOR
RF BUFFER
RF FINE ADJUSTER
OUTPUT ONLY
R1
HIGH
SIGNAL SELECTOR SWITCH
INPUT ONLY
LOW
R2
EXTERNAL
AF INPUT/OUTPUT
AF AMPLIFIER
AF OSCILLATOR
X'TAL OSCILLATOR
Q4
400Hz
OUT PUT
X'TAL
X'TAL
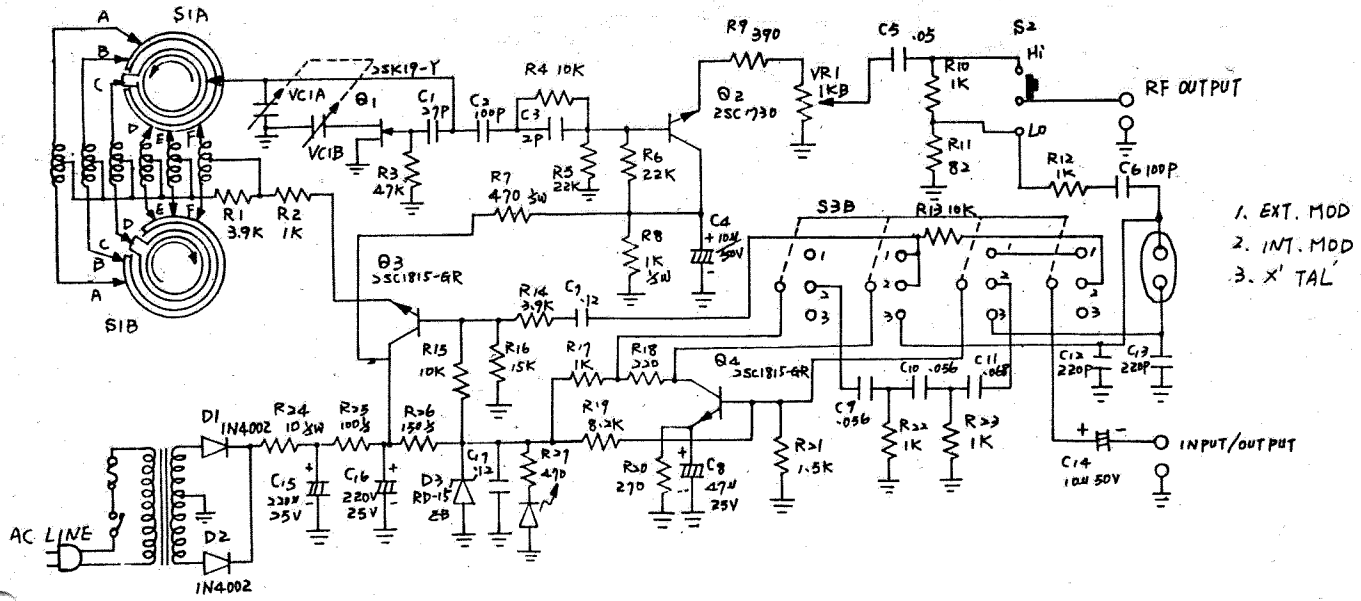
# CURCUIT DIAGRAM