Wednesday, October 31, 2007 14:01:15

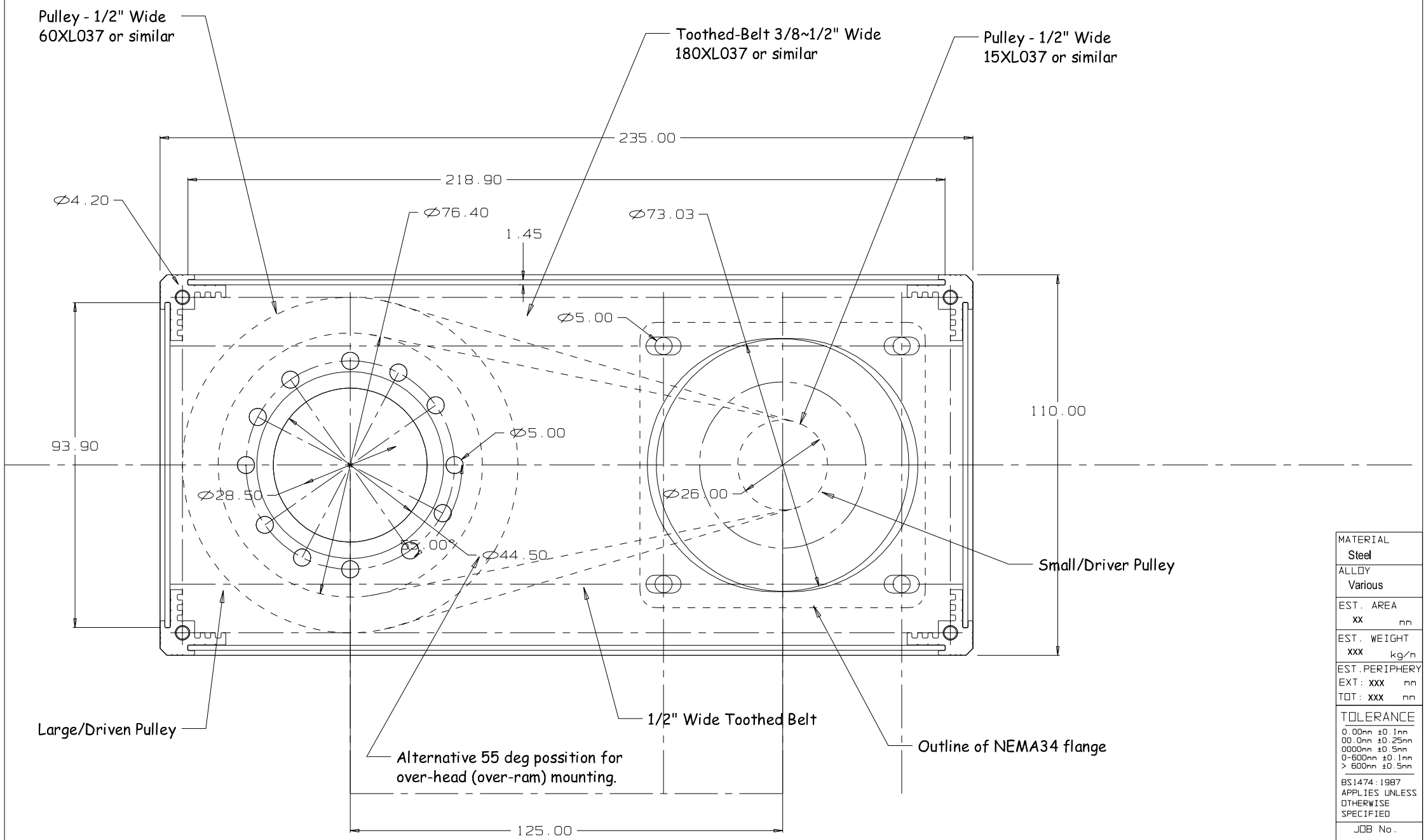

MATERIAL	Steel
ALLOY	Various
EST. AREA	xx mm
EST. WEIGHT	xxx kg/m
EST. PERIPHERY	EXT: xxx mm TOT: xxx mm
TOLERANCE	0.00mm ±0.1mm 00.0mm ±0.25mm 0000mm ±0.5mm 0-600mm ±0.1mm > 600mm ±0.5mm BS1474:1987 APPLIES UNLESS OTHERWISE SPECIFIED
JOB No.	0000

CASA Modular Systems

P.O. BOX 38-828, WELLINGTON, NEW ZEALAND
TELEPHONE : (64-4) 5687 277
FACSIMILE : (64-4) 5685 161

CUSTOMER : CASA Modular Systems				SIZE	DRAWING Reference No.	ISSUE
DESCRIPTION : "Z" Axis Quill NEMA34 Motor Fixing Plate				A3	2JB-ZPIt235	
DRAWN : A.W.D	DATE : 31/10/07	APPROVED : ?	DWG. SCALE : 1:1			

© COPYRIGHT : CASA Modular Systems
ALL RIGHTS RESERVED