Revised: 8/5/09

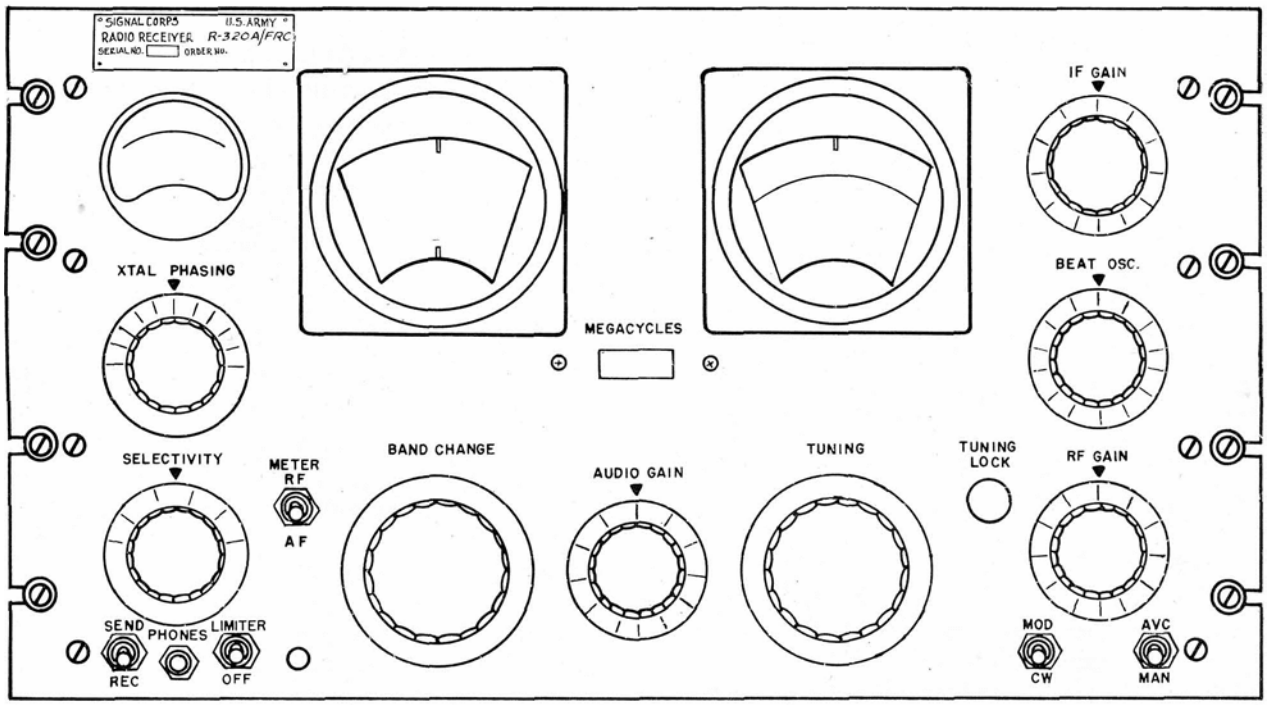

An Anthology Of Technical References For The Hammarlund SP 600 And Its Variants

A collection of wisdom for enthusiasts

Release 1.0 July 2009

Table Of Contents 2

Introduction and Project Origins 4
Safety Section 6
EB5AGV's SP-600 Model Information 8
SP-600 Sequential Model Information 10
SP-600-JX 21A Pictures Photos courtesy of Paolo Viappiani 12
Hammarlund Super-Pro SP-600 Page 13
SP-600 Identification Guide 17
Original Power Supply Schematic With Comments 22
Recapping the Hammarlund SP-600 23
Some General Notes From Other Experienced SP 600 Rebuilders 34
SP-600 Receiver Modifications Bruce Stock 36
Updating the SP-600 By Douglas A. Blakeslee 40
Quick and Dirty SP-600 Audio Modifications 45
Problem Parts 45
455KHz IF buffer output check 46
Nuvista plug in for 1st RF amplifier 47
Increasing The Lifetime Of V18 (0A2) 49
Simple, inexpensive audio output improvement 50
On Using The 6EH7 51
Cross-Modulation In Receiver R.F. Pentodes 52
Improving Your Receiver With Frame-Grid R.F. Pentode 54
JX-17 IF Gain Mod 61
Adding Collins Disc-Wire Mechanical Filters., Parts 1,2 and 3 63
Synchronous Detection of DSB and ISB Signals 71
TM 11-851 Resistor and Capacitor Parts List 74
Capacitor Summary Tally 76
Cleaning & Lubrication Materials and Helpful Hints 79
Capacitor Color Code Table 81
Capacitor Value Translation Table 82
Test Jigs and Adapters 84

Section 2

Published John R Leary Hammarlund Articles 85
The John R Leary SP 600 Chronicles 87
Tube Substitution 99
An Experimental SP 600 SS Delayed B+ Power Supply 103
SP-600 Dial & Gear Train Alignment 105
Lead Leakage Filtering Systems 106
A Medium Wave Audio Processor 107
MOSFET 6V6 or 6AQ5 110
SP 600 General Upgrade and Mod List 114
Tube Shield Dissipation Measurements 115

Precision AM Rectifier Circuit 117
Precision AM Rectifier Circuit Version 2 118
Precision AM Rectifier Circuit By Rob Schenck 126
Elliptic Low Pass Audio Filter 130
New MRF581A Transformer Feedback Amplifiers 133
Short Amplified High Performance MW, LW, And SW Vertical Antennas 134
The Best Small Antennas For MW, LW, And SW 135
Revised Simplified complimentary Push-Pull Output Active Amplifier For Active Whip Antennas With Simple llP2 Adjustment 137
Low Noise Active Antennas AC/DC Power Supplies 138
Receiver noise figure sensitivity and dynamic range - what the numbers mean 141

Project Origins

The inspiration for this project is the Hollow State Newsletter that was started by Skip Arey, Chris Hanson, Dallas Lankford, Ralph Sanserino, and Reid Wheeler which had to be a money losing labor of love. Without their pioneering efforts there most likely would not be the R390 reflector list or what became the Y2K project.

> **Special mention must be given to Dallas Lankford who well could be the Nicola Tesla [The true inventor of radio] of boat anchor radio experimenting and upgrading. With a lifetime commitment to search for improvements and sharing them with others Dallas has written numerous articles not only posted on his web site but for the NRC, and the HSN as well. His combination of technical expertise combined with a down home writing really draws one to his articles. He maintains a "solid gold" web site at www.Kongsfjord.no**

The SP 600 was the culmination of a series of receivers built by Hammarlund starting in 1951.

Generally considered as the best "band cruising" short wave receiver ever made, it continues to be a favorite although the last of the main series of receivers were produced almost 50 years ago.

Although most SP 600 models appear to identical from a brief visual inspection, there were very many circuit modifications to the various models for reasons that may never be known. Some such as the "DX" modification were less than successful. Others may have been made at the request of the procuring agency. Many obscure variations are poorly or not documented. It can be a real challenge or nightmare, depending on ones attitude, to fined the exact schematic that matches ones set

In addition, many receivers have down through the years have lost their original badging and others have been "re-manufactured" turning a "J" into a "JX" or some other combination.

Andy Moorer has assembled a chart which gives invaluable information for "de-cripting" the particular chassis one has.

Technical manuals issued range from the pitifully pathetic and almost useless Northern Radio Company Type 159 Model 1 to the encyclopedic TM 11-851. Many manuals fall in between but have flashes of inspiration either in mechanical drawings, sub-assembly pictures, or parts lists. (See Andy Moorer's comments.)

Hammarlund also made a plug in modules such as the Navistar base replacement for the first RF amplifier tubes. These are generally obscurely documented.

There have been numerous improvements published over the years and as many of these that have been found are included.

Andy Moorer has catalogued over a dozen manuals on the Hammarlund web site. They are available for download.

Some idiotic manual statements by a junior Eddie Einstein such as "g. Plot as abscissa on semi-logarithmic graph paper the plus and minus kilocycle deviations from resonance against their respective 10, 100, or 1,000 times, logarithmic ordinate resonance input." will be attempted to be translated into "real world" information.

Many tests called for required test equipment that was never seen in the field by the troops such as spectrum analyzers, sweep generators and O'scopes that could be used for bandpass calibration. Do not despair. There are real world work arounds that will give the same or better results with much less difficulty. For example, if one does the audio modification suggested by Chuck Ripple, the receiver will perform better than the original factory specifications.

The 21st Century SP 600 Anthology

The anthology is published in PDF format for its universal ability to be read and for a smaller file size that using a .doc file.

This project was initiated to try to consolidate the many upgrade articles that have been published over the years as well as articles published on the internet that would be of use in upgrading SP 600 receivers.

Due to the inconsistencies of different manuals one should consider the downloads available on the Hammarlund website for a collection that would be appropriate to your specific needs. Also much "tweaking" was done to the SP 600 during production runs and often was not well documented..

Due to the relative spaciousness above and below the chassis, the SP 600 series provides great opportunity for performance enhancing modifications or supplemental additional circuits. With replacement of many of the original passive components far better performance can be obtained that were the receivers left the factory.

The goals of this project are to:

1. Retouch the line and schematic drawings used for improved clarity.
2. Add modification projects, repair methods, and suggestions for achieving maximum performance.
3. Include other documents that provide a basis of objective evaluation of ones receiver.

This document would not have been possible without the assistance of many volunteers who assisted drawing, photographing, copying, and researching. We are deeply indebted to the following contributors for their assistance. If we have missed any names please inform the editor so we can correct our oversight.

Jose Gavila, EB5AGV	**Perry Sandeen**	**Les Locklear**	**Cecil Acuff**
Dallas Lankford	**James A. (Andy) Moorer**	**Dave Drew, K3DX**	**Barry Hauser (sk)**
Norman Dulebohn	**Tom Norris**	**W. Li**	

We want this document to be of the greatest possible use to the public, and believe that the best way to achieve this is to make it free from proprietary claims. If you create or distribute copies of this document, whether gratis or for a fee, you *must* give the recipients all the rights that you have, including the right to freely copy, modify and distribute it.

This document is not a tutorial. By using it you attest that you have aware of the risks involved and are competent to deal with all hazards that may occur. This document is distributed in the hope that it will be useful, but WITHOUT ANY WARRANTY; without even the implied warranty of MERCHANTABILITY or FITNESS FOR A PARTICULAR PURPOSE. July 4, 2009.

The lead editor of this project is Perry Sandeen. I am solely responsible for all material, re-pagination and editing of articles used. Much of the material has been graciously provided by dedicated volunteers. But in the end I'm the one responsible for any errors or problems.

Please contact me at sandeenpa@Yahoo.com for any errors, omissions, permissions, or lack of appropriate attribution. Many of the articles and mods were copied from currently open websites. The addition of this material is to ensure it doesn't get lost as sometimes sites disappear without a trace.

Safety Section

With thanks to Joe Foley for material used in the Y2K manual

There is absolutely no substitute for good safety practices!

These radios are at least 50 years old. Even if you got the radio in "full operating condition" from your very best buddy it doesn't insure that he or people before him knew what they were doing.

If the radio was obtained from an unknown source or is a "builder" this becomes even more important. These radios can bite. I found that out the hard way.

There was one "fix" for leaking power chokes published in the HSN. Instead of replacing the bad choke (it is expensive) the "cure" recommended was to just isolate the choke from the chassis. This, unless permanently displayed on the part, is illegal. Even properly marked, this type of "repair" thinking process is dangerous and stupid. As an example, I bought a SP 600 from an "experienced ham" in California who had used telephone low voltage wiring in his modification circuits, an AGC "Mod" that totally ruined the audio output meter function, a home brew power supply of questionable performance and shoddy workmanship.

Improper touching of the high voltage circuits, while it is very improbable that you will be killed, can cause an involuntary muscle reaction where you jerk against something sharp. This can require the need for some unique and painful stitching at your local trauma center.

Sadly to say, there are far too many incompetent "technicians" who've been inside these sets. You have to watch out for yourself.

On to the practical:

Before plugging the receiver into an outlet:

1. The first thing one wants to do is a visual inspection and a smell test. If all the components and wiring look OK and there are no smells of burning or other putrid odors it's reasonable to go on to the next step.

2. Check that all the fuses are where they should be and are of the right value. There are no spare RF or IF transformers at Rat Shack.

3. Check the power cord. Is it a modern 3 wire type? If not this is the first thing you want to change. You have several choices at this point. One is to gut out the old cord and to insert a salvaged 3 wire computer power cord. All cords are color coded in one of two ways. Black, white and green usually used in North America or brown, blue and green which is used in other parts of the world.

Green is always a chassis to approved electrical service "earthed" ground. This must be physically bonded to the metal chassis.

Black or brown are always the hot lead which should always go to through a fuse to the input power switch. The SP 600 and other receivers ARE NOT wired that way and should be changed.

White or blue go to the return power lead.

There are no exceptions to this rule for receivers wired for 110 volts. 220 volt wiring in other country's may be different. If 220 volts are used check your local electrical codes.

At the time these radios were in service what is known as a "live front" caps were used extensively. What "live front" means is that when a paperboard type of insulated spacer was removed from the cap front, the wire mounting terminals were exposed. Due to the tight fit it was common practice to tin these wires with solder to keep from having any stray strand(s) from sticking out and allowing easier tightening of the screws. Unfortunately, solder will "cold flow" allowing the terminals to loosen and overheat. Any cap like this is now illegal and should be replaced before powering up. Modern 3 wire plugs as used on power tools will be fine.

Here becomes the first of problems you will face. A properly grounded SP 600 with the originally installed line filter that is perfectly functional may trip the standard USA GFCI protected circuit. It does this if the filter design passes a little more than 5 Ma. to ground and the GFCI trip current is 4 Ma. GFCI protected circuits are a NFPA mandatory electrical code requirement in new or remodeled construction for a number of years in the USA. In most areas requiring electrical inspection, it is law. If the receiver is operated on 220 volts, this current leakage doubles.

You have several choices. One is to use an isolation transformer. A second is to remove the original filter capacitors attached near the power cord entrance. This is not a particularly good plan as the original filter provided some EMI protection. The third choice is to use a modern computer power supply input filter or an equivalent type low leakage filter mounted inside the chassis. They are cheap, readily available from a dead computer PS or major parts suppliers.

Now that the power into the radio has been checked do a visual check on the innards. Look for burn marks, hot spots, bad wiring. Do the resistance checks in the manual at every tube socket and resistor. Check the operation of all switches, if any bind or feel loose this is a good time to fix them. Pay close attention to the Filter Capacitors, they are a popular failure point. They may work fine, explode, or just get very hot. If its an older model and has the some or all of the Black Beauty capacitors one should seriously consider a wholesale replacement before going any further as you are going to have to do it sooner or later as they are now at least leaky and will fail in the near future.

Is it power time? That's your decision.

If you do it's a good idea to bring it up to full voltage on a variable transformer (variac), slowly, while checking for smoke/heat/sparks. One problem with a variac is that the voltage is dependent on the current passing through it. It should always have a voltmeter and ammeter attached to it. Watching the CURRENT as one brings up the voltage is the easiest way to spot a bad power problem BEFORE the smoke and sparks start. It should also be connected to a Ground Fault Circuit Interrupter.

⇒ **Danger:**	Under no circumstances should you attach power to the receiver without a **proven good** ground wire attached properly to the frame. Filter leakage is present with the receiver turned off.

⇒ **Danger:**	A variac is an adjustable auto-transformer and does not provide any current leakage isolation.

EB5AGV's SP-600 Model Information

SP-600 J-Model Information

JX Model	Date added (according to Hammarlund files)	Comments
1-9	9-19-51	
10,11	11-8-51	
12	11-9-51	
13	11-26-51	
14	3-12-52	
14	4-23-52	Name plate to add R-274A/FRR
14	9-29-52	'A' was R-542/FRR
15-17	6-17-52	
18	6-26-52	
19,20	8-27-52	
21-26	2-13-53	
24	10-9-57	Special supplied to NAVSHIPS 91661, R-274B/FRR
27	3-13-53	
28	10-5-53	
28	3-8-54	Name plate added
29	3-12-54	
30-33	12-28-54	
34,35	7-7-56	
36	10-3-57	
37,38	3-28-61	
39	7-21-61	Made for FAA contract FA-2338 same as 21, except has 6 position freq control instead of 7

SP-600 Sequential Model Information

Model	Designation	Comments
1	JX-1	
2	JLX-2	
3	J-3	
4	J-4	R-320A/FRR SIGNAL CORPS 19474-PHILA-50-06
5	J-5	R-483/FRR SIGNAL CORPS 21478-PHILA-50
6	JX-6	R-274B/FRR NAVY NOBSR-52039
7	JX-7	
8	JX-8	
9	JL-9	
10	JX-10	
11	J-11	MADE TO COMPLETE NAVY ORDER ECN-1156
12	JX-12	R-274A/FRR SIGNAL CORPS 3376-PHILA-52
13	J-13	SAME AS 5, NAME PLATE CONTRACT 16838-PHILA-51, SERIAL NUMBERED 52 TO 67 INCLUSIVE
14	JX-14	R-274C/FRR SIGNAL CORPS 1689-PHILA-51-01
15	JLX-15	
16	JL-16	
17	JX-17	AIR MATERIAL COMMAND
18	JX-18	
19	J-19	
20	J-20	R-483A/FRR SIGNAL CORPS 3479-PHILA-52-06
21	JX-21	
22	J-22	
23	JLX-23	
24	JL-24	
25	J-25	
26	JX-26	R-274C/FRR 3376-PHILA-52
27	JLX-27	
28	JX-28	R-620/FRR SIGNAL CORPS 25693-PH-53-61 on contract DA-36-039-SC-49453
29	JX-29	MADE FOR CONTRACT XG-1178
30	JX-30	DIVERSITY
31	VLF-31	
32	JX-32	BLACK WRINKLE FINISH ON FRONT PANEL, FIRST MADE FOR MACKAY RADIO THEIR ORDER # M-41666
33	JLX-33	SAME AS 17, EXCEPT FREQ: .1 TO .4 and 1.35 TO 29.7
34	JL-34	FIRST MADE FOR CIA ORDER XG-1765, FREQ: .1 TO .2 and .54 TO 14.8
35	JX-35	R-274B/FRR ORDER NO BSR-71369, USES 0-10 KC BFO
36		
37	JX-37	
38	VLF-38	SAME AS VLF-31 EXCEPT 25 CYCLE
39	JX-39	FAA CONTRACT FA-2338

PRODUCTION DATE	SUFFIX #	NOTES
Sept. 1951	SP-600-JX-1	Std. Frequency range 540 khz-54 MHz. Also designated R-274A/FRR ("Fixed Radio Receiver") Signal Corps order no. 1689-Phila- 51-01. Note: many early SP-600's were simply designated SP-600-JX
Sept. 1951	SP-600-JLX-2	Frequency range 100-400 kHz, 1.35-29.7 MHz
Sept. 1951	SP-600-J-3	Std. Frequency range, 540 khz-54 MHz. No X-tal frequency control.
Sept. 1951	SP-600-J-4	Std. frequency range, 540 khz-54mhz. No X-tal frequency control. Equipped with 25 to 60 cycle (hertz) power supply. Signal Corps. R-320A/FRC, order no. 21478-Phila-50-06. Also has separate IF gain control located where the X-tal frequency control was normally located. Part of OA-58B/FRC Set.
Sept. 1951	SP-600-JX-6	Std. Frequency range, 540 khz-54 MHz. BFO range 0-10khz. U.S. Navy model R-274B/FRR, order no. Nobsr-52039 19 October, 1954. Navships manual 91661.
Sept. 1951	SP-600-JX-7	Std. frequency range, 540 khz-54mhz.
Sept.1951	SP-600-JX-8	Std. frequency range, 540 khz-54 Mhz. Manufactured for Welch contract no. XG-479. Believed to be a cover for a CIA contract.
Sept. 1951	SP-600-JL-9	Frequency range, 100-400khz, 1.35-29.7 Mhz. No X-tal frequency control.
Nov. 1951	SP-600-JX-10	Std. frequency range, 540 khz-54 Mhz. Replaces JX-7.
Nov. 1951	SP-600-J-11	Std. frequency range, 540 khz-54mhz. No X-tal frequency control. Note: This model made to complete NAVY order, without the changes per ECN1156 as standard J series. Replaces J-3.
Nov. 9, 1951	SP-600-JX-12	Std. frequency range, 540 khz-54mhz. Signal Corps. R274A/FRR, order no. 3376-Phila-52. Replaces JX-1.
Nov. 26, 1951	SP-600-J-13	Std. frequency range, 540 khz-54mhz. No X-tal frequency control. Signal Corps. order no. 16838-Phila-51. Serial no's. 52 to 67 inclusive. 25 to 60 cycle power supply. Replaces J-5. 16 receivers produced on this order.
April 23, 1952	SP-600-JX-14	Std. frequency range, 540 khz-54mhz. Signal Corps. R274C/FRR, order no. 3376-Phila-52. Also designated previously as R-542/FRR. Replaces JX-10.
June 17, 1952		SP-600-JLX-15 Frequency range, 100-400 kHz, 1.35-29.7 Mhz. Replaces JLX-2.
June 17, 1952	SP-600-JL-16	Frequency range, 100-400 kHz, 1.35-29.7 Mhz. No X-tal frequency control. Replaces JL-9.
June 17, 1952	SP-600-JX-17	Std. frequency range, 540 khz-54mhz. Diversity receiver. Manufactured for Air Material Command. Note: easily identified by 'red metal knobs'. The most common of the SP-600 series receivers.

PRODUCTION DATE	SUFFIX #	NOTES
June 26, 1952	SP-600 JX-18	Std. frequency range, 540 khz-54mhz. Made for 'GAUVREAU ' contract. Replaces JX-10.
Aug. 27, 1952	SP-600-J-19	Std. frequency range, 540khz-54 MHz. No X-tal frequency control. Equipped with 25 to 60 cycle power supply. Replaces J-5, J-13.
Aug. 1952	SP-600-J-20	Std. frequency range, 540 khz-54mhz. No X-tal frequency control. Same as J-19. Signal Corps. R-483A/FRR, order no. 3479-Phila-52-05. Equipped with 25 to 60 cycle power supply. Replaces J-19.
Feb. 13, 1953	SP-600-JX-21	Std. frequency range, 540 khz-54mhz. Replaces JX-10.
Feb.1953	SP-600-J-22	Std. frequency range, 540 khz-54mhz. No X-tal frequency control. Replaces J-11.
Feb. 1953	SP-600-JLX-23	Frequency range, 100-400 kHz, 1.35-29.7 mhz. Replaces JLX-15.
Feb. 1953	SP-60O-JL-24	Frequency range, 100-400 khz, 1.35-29.7 mhz. No X-tal frequency control. Replaces JL-16.
Feb. 1953	SP-600-J-25	Std. frequency range, 540 khz-54mhz. No X-tal frequency control. Equipped with 25 to 60 cycle power supply. Replaces J-19.
Feb. 1953	SP-600-JX-26	Std. frequency range, 540khz-54mhz. Signal Corps. R274C/FRR, order no. 3376-Phila-52. Effective upon Signal Corps. approval of TAR#10 dated 2-12-53. Replaces JX-14.
March 13, 1953	SP-600-JLX-27	Special frequency range, 200-400 khz, 540 khz-29.7 mhz.
Oct. 5, 1953	SP-600-JX-28	Std. frequency range, 540 khz-54mhz. Signal Corps. R-620/FRR, order no. 25693-Phila-53-61, contract DA-36-039-SC-49453.
March 12, 1954	SP-600-JX-29	Std. frequency range, 540 khz-54mhz. Made for CIA contract no.XG-1178.
Dec. 28, 1954	SP-600-JX-30	Std. frequency range, 540 khz-54mhz. Diversity receiver. Replaces JX-17 red metal knobs, not very common.
Dec. 1954	SP-600-VLF-31	Special frequency range, 10-540khz; X-tal frequency control (4 position). Very low frequency receiver.
Dec. 1954	SP-600-JX-32	Std. frequency range, 540 khz-54mhz. Black wrinkle finish front panel with white engraved lettering. Made for Mackay Radio, their order no. M-41666, Hammarlund production order no. 2467- 300. Internally the same as JX-21.
Dec. 1954	SP-600-JLX-33	Special frequency range, 100-400 khz, 1.35 - 29.7 mhz.
Aug. 7, 1956	SP-600-JL-34	Special frequency range, 100-200khz, 540 khz-14.8 mhz. Made for CIA. Their order no. XG-1765.
Aug,. 1956	SP-600-JX-35	Std. frequency range, 540 khz-54mhz. X-tal frequency control. BFO range 0-10 khz. U. S. Navy R-274B/FRR, order no. NObsr-71369. Navships manual 91661.

PRODUCTION DATE	SUFFIX #	NOTES
Oct. 3, 1957	SP-600-JX-36	Std. frequency range, 540 khz-54mhz. X-tal frequency control. Made for FBI, their order no. FBI-16876, their contract no. J-FBI-3873. Same as JX-21, except for addition of audio input jack on rear of chassis.
Oct. 9, 1957	SP-600-JL-24	(Special) Frequency range, 100-400 khz, 1.35-29.7 mhz. No X-tal frequency control. U.S. Navy R-274B/FRR. Supplied to NAVSHIPS 91661, R-274B/FRR per PL-33910-1. Reason for 'Special' designation not known.
Mar. 28, 1961	SP-600-JX-37	Std. frequency range, 540 khz-54mhz. X-tal frequency control. 25 to 60 cycle power supply. Otherwise, same as JX-21.
March, 1961	SP-600-VLF-38	Special frequency range, 10-540 khz. X-tal frequency control (4 position). Very low frequency receiver. 25 to 60 cycle (hertz) power supply. Same as VLF-31 except for 25 to 60 cycle (hertz) power supply.
July 21, 1961	SP-600-JX-39	Std. frequency range, 540 khz-54 mHz. Made for FAA contract no. FA-2338.
June 1969-1972	SP-600-JX-21A	Std. frequency range, 540 khz-54 mhz. This was the last series of SP-600's manufactured. It had 22 tubes vs. 20 in other models. Also, a separate product detector, LSB,USB,CW,MOD switch. Appearance was different from other SP-600's in that the knobs had no metal skirts, the front panel was engraved with markings for Xtal phasing, selectivity, bfo, audio gain, rf gain. Also is marked JX-21-A on front panel. This is probably the rarest of the SP-600 series.

SP-600-JX 21A Pictures Photos courtesy of Paolo Viappiani

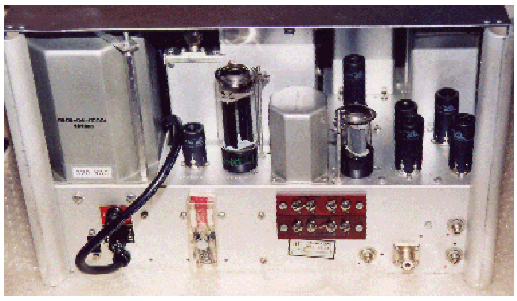

Hammarlund Super-Pro SP-600 Page

From the Hammarlund web site Contributed by James "Andy" Moorer

As noted before, I enjoy restoring these units to good working condition. The difference between these primarily-military units and the commercial shortwave receivers is quite remarkable. These are much easier to repair. They are designed so you can get into every nook and cranny (sometimes with some difficulty) so every part can be repaired.

For more information on Hammarlund and these great receivers, visit the Hammarlund Historian web site.

Many people have asked me what is the difference between the "Diversity" receivers (The SP-600JX 17) and all the other receivers. The diversity receivers look really cool because of the 3 red knobs on the front, but it is probably irrelevant for modern usage. ***In fact, the AGC structure, I feel, is not as good as the other receivers. Among other things, they inject the AGC voltage into the 6BE6 first mixer tube. The 6BE6 is not really designed for variable-mu operation. They run the first two RF stages at a relatively high gain all the time. I think this causes the AGC to do weird things***. I feel these receivers overload much more easily on strong signals. But if you like nifty red knobs, this is for you. It is also the most common single model of the SP-600 that was produced. It is a complex enough issue that I put together an entire page just on the diversity receivers: Just click here to see Hammarlund's original description of these receivers.

(repeat of caveat on boatanchor page)

On the other hand, I do need a supply of SP-600 fixer-uppers. I will pay up to $175 for a SP-600 plus up to $45 shipping, sight-unseen. If the unit has all the main components (transformers, meter, knobs, etc), you get the full $175. If it is missing pieces, or some pieces are not repairable, we will negotiate a somewhat lower rate. I pay $75-$100 for parts units, depending on how many usable parts they have that I need. Contact me with your tired, dirty old SP-600s.

SP-600 Tidbits

ABOUT THE CASE

The receivers that are pictured in my restored radios are from Premier Metal Products. I would be glad to sell you one for $272 (my cost with CA state tax) plus about $25 for shipping, but you can get them cheaper by buying them directly from Premier Metal Products. Go to the Premier Metal Products Web Site. You are looking for the "Trimline Portable Instrument Case". The part number is TIC-101917. It will handle the extra depth of the SP-600 with no problem. Some people complain that there is no ventilation in this cabinet. That is true. For an additional $100 or so, Premier Metal Products will be happy to give you one with louvers in the sides and top. For a few more bucks, you can get a half-height rear panel as well. The case comes in a range of colors. I tend to prefer the battleship grey myself.

ABOUT WASHING/CLEANING AN OLD RADIO

People ask me frequently about how I get the chassis of the SP-600 so shiny clean. First off, they are more shiny in the pictures than they are in real life. I take my cleaning technique from Dave Medley.. For me, the cleaning is just one part of the restoration process, so I do not clean a radio unless I am ready to completely restore it. My procedure goes as follows:

1. Take everything off that can be easily taken off. Top cover, bottom cover, front panel, all the IF can covers, 3.5 MHz crystal cover, all the tubes, and the sides (they do come off).

2. Make up a gallon of warm, soapy water. I use Simple Green, but just about anything will do. Some people like non-ionizing cleansers, but I don't know how to tell the difference. Take the hose and drench the radio with water. Take a couple of plastic scrub brushes (big and small), a plastic scrubby sponge, an old toothbrush, and maybe a bit of number 600 wet-dry emery paper and get to work! You will have to work the scrubby part of the sponge into all the nooks of the radio. You have to work it all around the tube sockets and behind the coils. Make sure you get into everything. Let the foam go everywhere - pour buckets of water all over the radio. Don't let the radio dry with soap on it - rinse well first. When you are done with the radio, I drop all the small parts into the soapy water and hand-wash them and lay them into a sieve of some kind.

N.B. - if you have a radio with paper parts, like the dial on the drum of the R-388, you may want to remove that first. Take all the paper parts off first.

3. THIS IS THE IMPORTANT PART - Rinse the radio with 3-4 gallons of distilled water (after rinsing with the hose). This prevents any minerals from the tap water from getting in the radio and causing shorts. The stuff is only a buck or two per gallon, so use more than you think you would ever have to. Keep rotating the radio under the water to get it from all angles.

4. Dry the radio carefully. In California, I just leave it out in the sun for a couple of days, rotating it every few hours. Some people put it in the oven(!). It doesn't matter, but it has to get really, really dry. You do not want a single drop of water in the thing when you power it up.

Yes, I do wash the gears and all the parts that are normally lubricated. You are going to re-lube them anyway (if needed - brass gears don't need lubrication). Uh, in case it isn't obvious, don't try to wash the meter. I have inadvertently dunked the meter - it did eventually dry out, but I had to take it all apart first.

ABOUT THE CRYSTALS

I have had a number of questions about the crystals in the FCU (Frequency Control Unit) of the JX models. Getting a crystal is not a difficult process. JAN crystals will be happy to sell you as many as you want, even in the antique HC-11 package, at about $15 each, custom-cut to your frequency. You do have to get the frequency right. It is not just the frequency of the station you are trying to receive. Here is a reduced version of the chart to figure out the crystal frequency, given the frequency of the desired station:

.55MHz To 7.4 MHz - add 0.455 MHz to get crystal frequency
7.4 MHz to 12.05 MHz - add 3.955 MHz
12.05 MHz to 44.05 MHz - Add 3.955 MHz and divide by 3 (3rd harmonic)
44.05 MHz to 54 MHz - Add 3.955 MHz and divide by 4 (4th harmonic)

You will also have to specify some other stuff. Use the following:

Case: HC-6/U
Mode: PARALLEL
Parallel capacitance: 40 pf

Resistance at Resonance: 200-1000 ohms (not critical, as high as is reasonable)
Mode: fundamental, 3rd or 4th harmonic from table above
Precision: 25 ppm (you can get better by paying more)
Signal Level: 2-5 volts.

Go to the JAN Crystals Web Site and click on "Custom Crystal Design Sheet". Fill out the above entries on the sheet. Leave the others blank, or just put "not critical" on them. Last time I did this, the inside sales person was Sue Brick and she was very helpful. It took about 6 weeks to take delivery of the crystals. They all worked perfectly.

Here is a little calculator that will compute the above formula for you:

If you don't get a calculator there, you probably need to download a current Java Virtual Machine. Thank you, Bill Gates. To get this, click HERE and click on "download it now." If you still don't get a calculator, send me a note. If you do get a calculator after the download, then send an email to Microsoft and ask them to make sure to bundle the most current Java Virtual Machine with their programs and operating systems.

Scanned SP-600 Manuals

One of the most difficult parts of dealing with these old receivers is finding the appropriate manuals. Without schematics and other descriptions, it is a hopeless task trying to repair these things. Fortunately, there are a number of the original manuals still extant. They show up on eBay from time to time, or can be borrowed from old-timers (although the number of such is diminishing every year). Another problem is that most scans of these manuals are of relatively poor quality. I attribute this to the fact that high-quality scans take a lot of disk space, and it takes a fair amount of time to dress them up in Photoshop. I do not have a lot of manuals, but the ones I have, I have scanned in at high resolution. I manually de-screened the half-tone images, since the automatic de-screening doesn't work very well (seems like us DSP types should be able to fix that). Below are some of the manuals I have put together. The first three are from BAMA and are not of high quality. The rest are of very good quality, but are also quite large. The granddaddy of SP-600 manuals is TM11-851, the military manual on the R-274 and related receivers (N.B. - there was a unit made by Hallicrafters that was also called the R-274. That's in TM11-897. I have not scanned it - yet.). It is particularly problematic, since it has six schematics that are 14" by 60". I include scanned versions of these in the original form factor, but also a version that has each schematic as three 11"x17" overlapping sheets, so you can print them out (Kinko's can do this) and tape them together to get the full schematic. This manual only covers units up to serial number 4600 or so and does not cover the diversity receivers. There is a separate manual (see below) specifically for them.

If for some reason you can't manage to download what you want, for $20 I will send you a CD-ROM with all these .PDF files on it. I prefer PayPal to jamminpower@earthlink.net, but you can just send me a personal check or whatever. Send me an email and give me your mailing address and I'll get a CD right out.

Also, I learned that there are a number of readers that have no good way to get a printed copy of these manuals. As a service to my readers, I will print out and comb-bind a copy of any of these manuals for you for $15 each (postage to US included - more for foreign). The one exception is the big one - TM11-851. I have to charge you $45 for that one because of the size (200+ pages) and the difficulty of printing out the schematics. I print them as 3 11x17 sheets for each of the 6 schematics.

ABOUT ISSUE-7

I list below the original SP-600 manuals, Issues 1 through 6. 1, 2, and 3 are pretty similar, but 4, 5, and 6 are quite different. Without explaining it, they describe various different models. For instance, the schematics in Issue-6 correspond to the JX-14 model. Well, there is also an Issue-7. But don't get your hopes up - it is a reprint of Issue-6. It was reprinted in 1966 (a decade after Issue-6). It does not have any additional information in it that wasn't already published in Issue-6. That being the case, I did not bother to scan it in.

Also, I am always searching for originals of Hammarlund manuals - even the ones I have already scanned below. I have noticed that there are often different versions of the manuals, even though they are called the same thing. For instance, I know that there are two different versions of the JX-17 manuals. I only have one of them. And there are two manuals that are earlier than Issue-1 that are just called SP-600J and SP-600JX manuals. If you have any of these original manuals, please let me buy or at least borrow them for scanning.

Download 6MB (Watch this spot!)

Issue-1 From BAMA. This is the oldest of the Hammarlund-issued SP-600 manuals and it shows it Download 10MB (Watch this spot!)

Issue-2 From BAMA. This one actually is reasonable, but the schematic doesn't have component values on it. A real pain. Download 5MB (Watch this spot!)

Issue-3 From BAMA. This is the first one that is particularly useful. It does describe one class of the first few thousand of these that were built. These are the ones that have the linear E13, as opposed to the rectangular block E13. This may seem like a technicality until you get one with the block E13 on your bench. Download 80MB (Watch this spot!)

Issue-4 My scan. This is the first manual that shows clearly the rectangular block version of E13. It actually has two separate sets of schematics and wiring diagram. One has the linear E13 and the other has the block E13. Also, the block E13 version has R72 and R73 going to the screen supply of V1, V2, V3, and V5. This is the infamous "7-wire" RF deck and is not compatible with any other RF deck. You can NOT swap this RF deck with any other unit. This form of screen supply was quickly abandoned, but R72 and R73 were retained in later units for the screen supply of the IF strip. (Watch this spot!) (Watch this spot!)

Issue-5 Sorry. Not there yet. Download 89MB (Watch this spot!)

Issue-6 This one represents most of the later models except for the diversity receivers. I also included annotated versions of the wiring diagrams where I put the component values next to the part numbers. Download 94MB (Watch this spot!)

SP600-JX-17 This one documents the "diversity" receivers. This is the most common unit that was made. There are significant differences from the other models. The 3.5 Mhz oscillator is a tuned-plate type rather than a tuned-grid type. The FCU has two boards in it and a torroidal transformer (which is generally broken into small pieces) with an RF connector on the back that serves as both input and output. It has two or three extra RF connectors on the back. (N.B. the units that have the third RF connector on the back are undocumented as far as I can tell. The third connector seems to be the output of the driver/2nd mixer stage before the IF strip, but I'm not sure yet). Download 12M (Watch this spot!)

AN16-45-436 This is another Air Force manual on the SP-600 (see below). This one is specifically the illustrated parts breakdown for the JX17 "Diversity" receiver. It is especially useful because it shows the location of every part and it specifically identifies the hardware. This is an important companion to the above manual. Note that it is NOT for any other receiver than the diversity receivers. Thanks to Brian Hill for the scan. I have one remaining question for the viewing audience: did the Air Force make other manuals for the JX17? Did they make an operating manual? A maintenance manual with schematics? Does anyone have copies of these that I could scan (if they exist)? Download 390M (Watch this spot!)

TM11-851 The granddaddy of all SP-600 manuals. 195 pages of text. Six large (14"x60") fold-out schematic sets. There is information here that you can't find anywhere else. For instance, it has a table of the DC resistance of every coil and transformer in the receiver. Very useful. It has a lot of detail about the differences among the various models. I have included versions of the fold-out schematics that can be printed on 11x17 paper and taped together.
Download Part 1 72M
Download Part 2 53M
Download Part 3 39M
Download Part 4 120M
Download Part 5 90M
(Watch this spot!)

TM11-851 This is the same as above, but broken up into five pieces for easier download. Each piece has a (redundant) copy of the last page of the previous piece so it is easy to make sure you got them all. Download 25M (Watch this spot!)

AN16-45-221 This is the first of four Air Force manuals on the SP-600. They have two sets of numbers - one starts with "AN" and the other starts with "T.O." This one is the operating instructions. Download 25M (Watch this spot!)

AN16-45-222 Air Force manual. Service Instructions. This has schematics and wiring diagrams. It has one of the most cogent and detailed descriptions of how the receiver works that you will find anywhere. Download 22M (Watch this spot!)

AN16-45-223 Air Force Manual. Overhaul Instructions. This is less useful than you might think it would be. It does have one useful part, which is the instructions for reassembling the gear train. If you have ever taken it apart, for instance, to fix a sticky or stuck tuning system, you will appreciate reading through that section. It does not have any schematics or wiring diagrams. It also has a lot of less useful information, such as how to apply the fungus-resistant coating for tropical operation. Download 44M (Watch this spot!)

AN16-45-224 Air Force Manual. Illustrated Parts Breakdown. When you are about halfway through rebuilding one of these units, you will really, really want a copy of this manual. It has the size of every single nut, bolt, and washer in the system. It is not so helpful with the electrical parts, but it has all the mechanical parts in nauseating detail. I took a lot of care with the scanning to make sure that every single bit is clearly visible in the illustrations. Again, all the half-tone images were manually de-screened for clear viewing.

SP-600 Identification Guide

James A. Moorer October 4, 2004

Most of the information here comes from my own SP-600 restorations.

(http://www.jamminpower.com/main/sp600.jsp) and from the Hammarlund Information web site (http://www.hammarlund.info/sp600.html). This will not get you to the exact Hammarlund model, except in a few cases. It will get you to the schematics and documentation for all the standard Hammarlund models.

There appear to be 5 basic "body plans" for the SP-600. Since there were at least 40 different model numbers, several model numbers will share basically the same body plan. To confuse us more, the Signal Corps had not only its own labeling scheme (R-274X), but its own set of serial numbers. There is no record of the correspondence between Hammarlund's serial numbers and the Signal Corps signal numbers that I have ever seen. To make things more confusing, the Navy commissioned the R-274B which used more than one body plan.

The best I can do in identifying the different models of the SP-600 is to figure out which basic body plan the particular unit is.

The most common model of the SP-600 is the JX-17, the "diversity" receiver. Since this unit is easily recognizable by the cool-looking red knobs, there is no difficulty identifying it. Even if the knobs are missing, it is easily identified by the extra switch on front that selects the AGC time constant. Even if the front panel and all the controls are missing, it is recognizable by the fact that it has 3 (or 4) RF connectors on the back panel. If all else fails, one can peek under the can that houses the 3.5 MHz crystal for the second mixer and see if it has more than one RF choke. That is yet another sign that it is a JX-17. You can see a picture of one here:

http://www.jamminpower.com/eBay/SP-600/SP-600.4.html

The JX-21A is equally easy to identify, since it has the AM, LSB, USB selector in the bottom right of the front panel.

Generally, the 4 body plans are as follows (in no particular order):

1. The "original" SP-600, including the JX and the JX-1. Has a 6-wire RF deck, R72 and R73 are bleeder resistors, no AGC voltage goes to V6 or V7, and V7 gets a - 10V bias.

2. The "direction-finder" SP-600. It has the 6-wire RF deck, R72 and R73 are power resistors that supply the screen voltage for the IF section. The AGC voltage goes to both V6 and V7. E13 is a block that has the "DF/N" screw terminals. This model includes the JX-26 and maybe others.

3. The "7-wire" SP-600. This is a unique model, the JX-14. It has the 7-wire RF desk, R72 and R73 are power resistors that supply the screen voltage for the RF section.

4. An early SP-600. 6-wire RF deck, R72 and R73 are bleeder resistors, not voltage dividers, no AGC voltage goes to V6 (2nd mixer) or V7 (gate), and V7 has 0-Volts on the grid bias. This includes the JX-6, and probably others. At least one model of the R-274B has this body plan.

About serial numbers: Hammarlund just numbered the SP-600s consecutively, so there is no clear correspondence between serial number and model number that we know of. Model numbers tended to follow order numbers.

Each time Hammarlund got a contract from the military, they would assign it a new model number. As far as I can tell, many of the model numbers are essentially identical. Similarly, the Signal Corps numbered their units consecutively, even though a particular model (R-274C, for instance) was involved in several contracts, several model numbers, and all sorts of SP-600 serial numbers. So, with this preparation, here is my suggested identification method (assuming that it is missing the ID plate on the top of the RF deck. It is also possible that somebody switched RF deck top covers on you, which can lead to endless confusion). The following is in the order that I would use, and not in either model number or date of manufacture number.

Does it have the 7-wire RF deck? (Body Plan 3)

Most of the SP-600s have 6 wires going to the RF deck. They are all connected through the circuit board on the top of T1. T1 is located in the little metal shield that is screwed to the right side of the RF unit. It has a cover that is held down by two cap nuts. T1 consists of two tunable inductors, L33 and L34. Sometimes the cover has the designations of the inductors printed on the top. The first step in removing the RF deck is to unsolder the wires from the RF deck. Count the number of wires coming from the RF deck through the square hole behind T1.

If it has a 7-wire RF deck it is an R-274C with a (Signal Corps) serial number of 487 through 1569. This is also known as SP-600JX-14. Note that other R-274C models (JX- 7, JX-10, and JX-26) do not have the 7-wire RF deck. I have personally worked on JX-14s with Hammarlund serial numbers from 8000 to over 10,000. The schematics of this model (with the 7-wire RF deck) are in Issue-4 of the Hammarlund manual (October, 1952, Figure 13, pp 33-34). Note that Issue-4 has two sets of schematics – the R-274C is in the first set, not in the supplement. It is also shown in Figure 101 of TM11-851.

Curiously, the 7-wire RF deck is shown as Figure 15 (p37) in the Hammarlund SP-600 manuals, Issue-5, Issue-6, and Issue-7, even though the schematics show the direction finder model (the JX-26).

The 7-wire RF deck will also have R72 and R73, which are two large, power resistors, bolted to the side of the chassis near the power transformer. They will be quite obvious. R72 is 7500 ohms at 20 watts. R73 is 10K ohms also at 20 watts. These two divide the regulated 150 volts down to about 85 volts for the screen supply of the two RF amplifier stages (V1 and V2). Note that other models use R72 and R73 for the screen supply of the IF strip.

Editorial comment: There is some point in regulating the screen supply. If you connect it to the plate supply, there is some chance that it will wave up and down as the plate voltage changes. This makes some feedback into the grid circuit, which does all sorts of nasty things, especially at high frequencies. The RF stages, however, never have much AC voltage on the plates, so there won't be much difference whether you stabilize the screen voltages of the RF stages or not. Other models use R72 and R73 to stabilize the screen voltages of the IF stages, which makes somewhat more sense. The AC (signal) voltage on the last IF stages can be several volts in amplitude. Any feedback into the grid circuitry can drive the circuit unstable. Of course, the IF system operates at a relatively low frequency (455 kHz), so it probably doesn't make much difference there either.

Is It Set Up For Direction Finding? (Body Plan 2)

The terminal strip E13 has several different configurations. The basic configuration is just a linear strip, as was so common in that era. The other configuration is just a bakelite block with studs. There are several different configurations of E13 blocks. The easiest one to identify is the "direction finder" version.

This was known as the late versions of the R-274C (Signal Corps serial number 1570 and higher), also as the JX-26 and maybe others.

The direction finder version of E13 has two screw terminals on the top and a single wire that may be moved from one to the next. Sometimes, one is identified by the letters "DF". Sometimes the cover to the top of the RF cage has a note on it describing the use of the jumper. As often as not, the cover is either missing or is not appropriate to the receiver it comes with, so you should always check E13.

The schematics of the model with the direction finding modification may be found in Figure 102 of TM11-851, but also in the supplement to Issue-4 of the Hammarlund manual (October, 1952, Figure 13, pp33-34, *second* set). As noted above, Issue-4 has two sets of schematics – this is the second set. Figure 1 shows E13 for the direction finder version of the R-274C. The schematics for the DF model are also shown in Issue- 5, Issue-6 and Issue-7, but you have to be careful since in those manuals, Figure 15 is *not* the RF deck of the DF model(!) – it is the 7-wire RF deck.

Editorial comment: This modification allows the operator to choose the amount of AGC voltage supplied to the 1st and 2 nd RF stages. In the "DF" position, the RF stages are run at a high gain, regardless of the strength of the incoming signal. This has the effect for medium-strength signals of reducing the input noise floor a bit, since the gain of the 1st RF stage determines the ultimate noise floor of the receiver. Unfortunately, it also causes increased intermodulation distortion and imaging for stronger stations. For normal, general-purpose listening, the jumper should be set to the "normal" (*i.e.*, *not* DF) setting. Note that even in the normal setting, the AGC supplied to the RF amplifiers is less than some other models.

Is it the Early SP-600? (Body Plan 4)

This one has the 6-wire RF deck, R72 and R73 are bleeder resistors on E16-6, there are no big power resistors over by the power entrance (and power transformer), no AGC voltage goes to V6 and V7, and V7 has 0-volts bias, which means that E17-1 and E17-3 are unconnected, like the 7-wire deck has as well. This is one model of the R-274B and is also called the JX-6. It is also the R-274C, Signal Corps serial numbers 1-486. The schematic for this is shown in TM11-851 as Figure 100. There are pictures of this model here: http://www.jamminpower.com/eBay/SP-600/SP-600.6.html.

Editorial comment: I happen to like this model more than all the others. The zero-volt bias on V7 gives a lot of gain on the lower three bands. This is lost on bands 1 and 2, since the atmospheric noise will swamp low-level signals, but on the upper part of band 3, the extra gain can help a bit. It does make a conspicuous difference in the gain between the lower three bands and the higher three bands. All the SP-600s are weaker on the upper bands, but in this one, the difference is even more.

Note that my name for it ("early") is not strictly true – although the design is early, the pictures at the URL above are for a JX-6 with Hammarlund serial number 15182.

Is It The "Original" SP-600? (Body Plan 1)

You have to identify this one largely by things that are not there. The large, power resistors, R72 and R73 that would be by the power entrance and power transformer will be missing. Instead, there will be two small resistors, R72 and R73, that serve as bleeders for the power supply. They will be found on E16-6. On other models, 16-6 will be void (nothing connected to it). It will have a 6-wire RF deck. If the radio can be powered up, you will find that Pin 1 of V7 (the 6BA6/gate grid pin) will be a constant -11 volts. This is supplied through R-34 (E17-1 to E17-3). It is 100K. On other models, pin 1 of V7 will either be zero, or it will vary as you turn the RF gain. This is the R-274A. The schematics are shown in TM11-851 Figure 99. It is also shown in the Air Force manual AN-16-45-222.

It is also shown in the Hammarlund manual Issue-3. It is also shown in Issue-1 and Issue-2, but the labeling of some of the figures is not as complete as in Issue-3. Some pictures of one of these may be found here: http://www.jamminpower.com/eBay/SP- 600/SP-600-3.html

Note that on the DF model, R53 (10K) goes between E17-1 and E17-3. On the 7-wire RF deck, there is nothing on E17-1 and E17-3.

Note that in the Air Force manual AN-16-45-222, Figure 7-4 shows that the wires going to E13-2 and E13-3 are reversed from in other models(!). This is especially confusing. I ran across one of these – it was a JX (no model number). I believe what happened was that some number of them were made with the colors of the wires coming out of the FCU swapped, so they had to swap them on E13 to make them work. Unfortunately, this means that on E13-2, all the wires are red-white *except* the one from the FCU. Normally, all the wires on E13-2 are red-white. Note that in Issue-3, the same wires are not shown as swapped.

Summary: Here is the basic decision matrix as best I can figure it:

	Body Plan 1	Body Plan 2 "DF"	Body Plan 3	Body Plan 4
RF-Deck?	6-Wire	6-Wire	7-Wire	6-Wire
R72/R73 Power?	no	yes	yes	no
E13	Strip	Block, DF/N jumpers	Strip	Strip
E16-6	R72/R73	NC	NC	R72/R73
E17-1, E17-3	R-34 (100K)	R-53 (10K)	NC	NC
Hammarlund Model	JX, JX-1	JX-26	JX-14	JX-6
Signal Corps Model	R-274A	R-274C, #1570 and up, R-274B (later)	R-274C, #487-1569	R-274B (early), R-274C, #1-486
Hammarlund Manual	Issues-1, 2, and 3	Issue-4, second set, plus Issues 5, 6, and 7	Issue-4, first set	None
Military Manual	TM 11-851, Figure 99. AN-16-45-222	TM 11-851, Figure 102	TM 11-851, Figure 101	TM 11-851, Figure 100

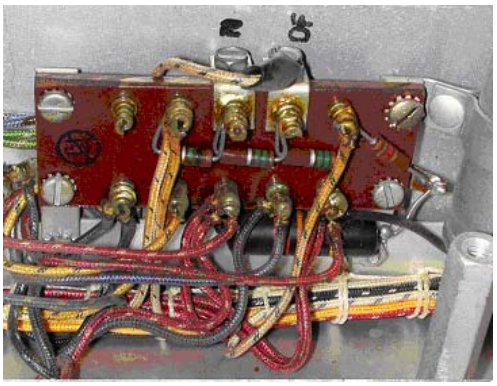

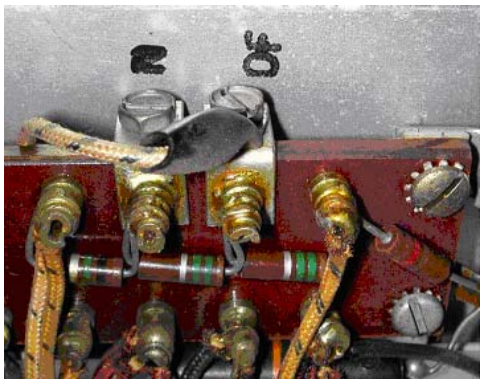

Figure 1 – Terminal strip E13 for the "direction finder" modification to the R-274C. These are found on the JX14 and the JX26. This changes the AGC voltage supplied to the 1st and 2nd RF stages. In the "DF" position, the first two RF stages are run at a relatively high gain, regardless of the strength of the incoming signal.

If anybody has any other observations, please let me know. Email: jamminpower@earthlink.net

Original Power Supply Schematic With Comments

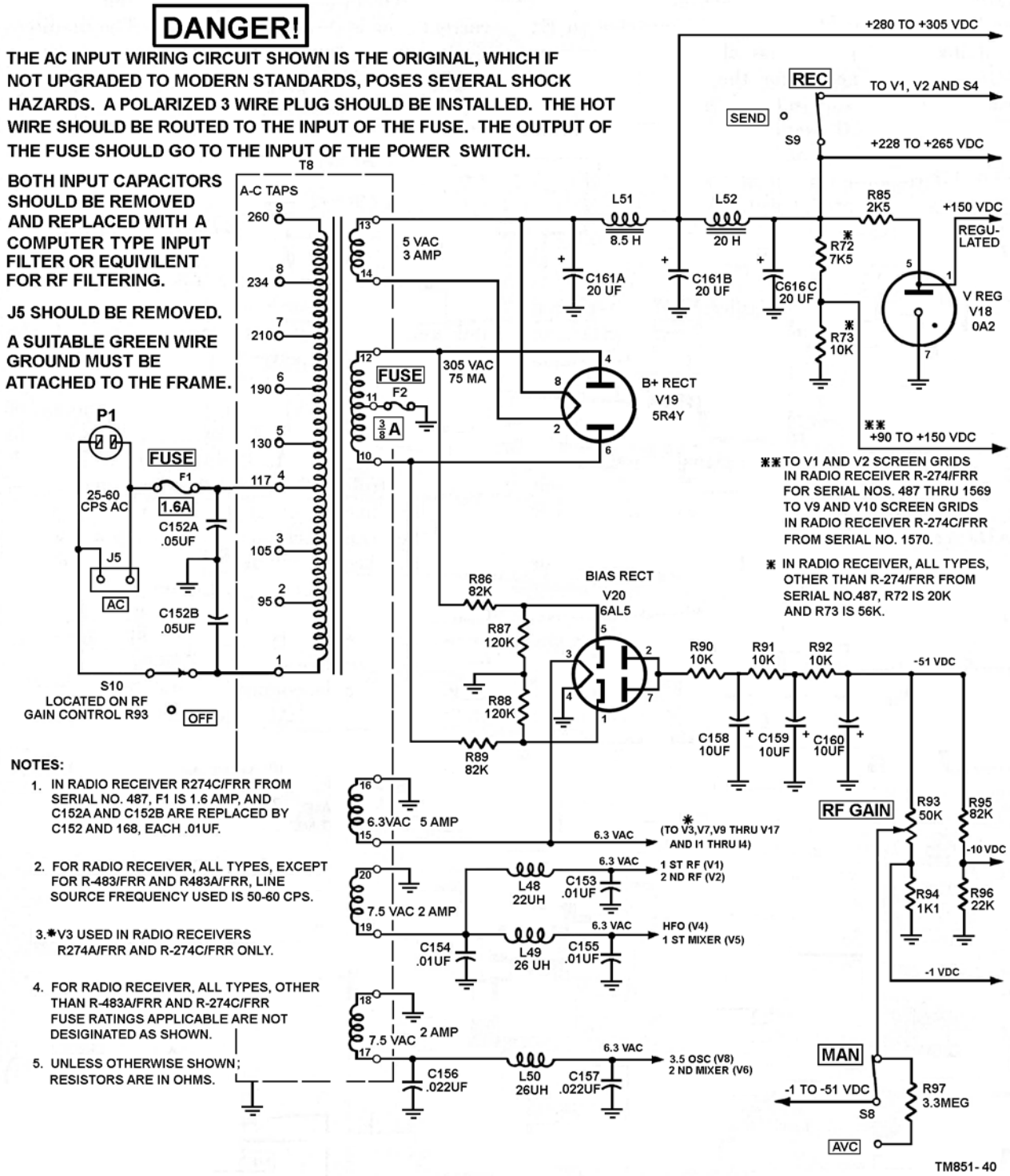

Figure 50. Radio Receiver, all types, schematic diagram of the power supply.

Recapping the Hammarlund SP-600

by Paul R. "Ray" Vasek - W2ECw2ec at arrl.net Used here with permission.

Edited, re-paginated and additional material from the R390 Reflector list added by Perry Sandeen May 2009

(changes made to this article in Sept. 2004 include more pictures, and some text additions) Recently I had the good fortune to obtain a relatively clean SP-600. Although a ham for over forty years, this was my first SP-600 and I was completely unfamiliar with it except for what I'd read in magazines or e-mail reflectors. The problem area mentioned most often was the BBOD, or Black Beauty of Death.

While waiting for delivery of my radio, I tried to gather whatever information I could in anticipation of a major recapping. While I received lots of good advice and ideas, I didn't come up with a really concise description of just how many and what kind of caps I should plan on replacing, nor the effort that would be involved. I decided that I would try to keep a detailed log of what I did and the order it which it was done, with the intent of providing some detailed information to help make the recapping process easier for others facing an SP-600 for the first time.

Keep in mind that this is the first, and only, SP-600 I have worked with. I do not pretend to be an expert on them, I am only relating the experiences I have had while working on this one particular radio. Additionally, there are many different models of the SP-600 and there may be various minor differences in the electrical configurations. Some differences may even appear within the same model, for example, my radio is an SP-600 JX-6, and one person who used my data while doing his SP-600 JX-6 was not able to locate a few of the capacitors I identified. So use this as a general guide only and be prepared for things to be a little different than I spell out, especially if your model is not a JX-6. However, a look at the schematics for several different models shows the same basic design to be followed throughout the series. Also, this is not a history of the various SP-600 models or an attempt to define the "best" capacitor to use. I'll leave that to those who are more familiar with the SP-600.

First off, many may ask, as I did, just what is a BBOD and what goes wrong with them?

The BBOD is a tubular capacitor, dark gray or black in color with numerous colored bands to identify its value and rating. It looks like a very large old style carbon resistor that might be in the 5 watt class, roughly 3/4" to 1" long and 3/8" to 5/16" in diameter. The name Black Beauty probably comes from the appearance of those caps most often encountered, a body molded of a shiny black material, and the Death moniker comes from the fact that almost every BBOD you encounter will fail, having very poor (high) leakage characteristics. (Later word has it that Black Beauty actually appears to be a real name, a trademark so to speak.) A large number will even have major cracks in them exposing the insides of the capacitor to the air. Some will be almost completely split in half.

These splits usually occur along the length of the capacitor. Don't mistake the sealed seam of the capacitor for a split. When you see a split, you'll know it! Figure 1 shows a pair of capacitors that appear to be in good solid shape with the colored bands plainly seen. Figure 2 shows another pair with splits running the length of the capacitor. While the split capacitors were obviously bad, a test of the "good looking" capacitors showed they were in as poor shape leakage wise as the split caps. The net is, when it comes to BBODs, just perform a wholesale replacement while you have the radio on the bench.

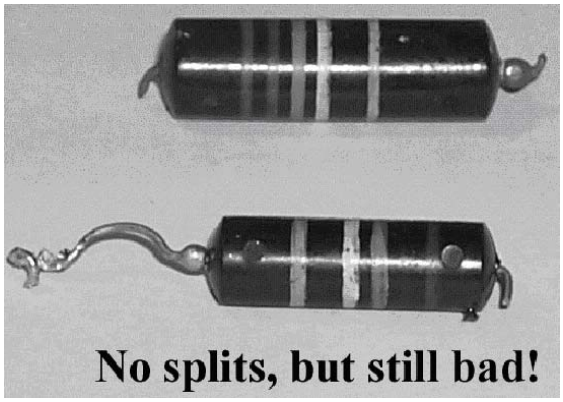

Figure 1

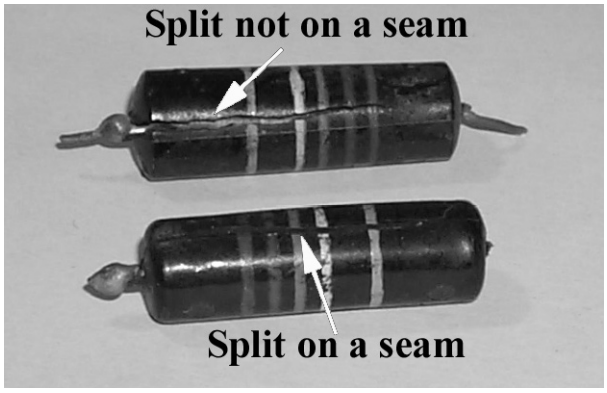

Figure 2

One thing you should be aware of. There are some lucky people out there who will not have to endure the recapping procedure. At some point late in the SP-600 life cycle, at about s/n 17,500, it was apparently recognized that the BBODs were experiencing a high failure rate after years of service. The specifications were then changed and ceramic disk capacitors were used in place of the BBODs. I've not seen any reference to similar failures in the ceramic disk equipped SP-600s. So before you start worrying about doing a recapping, check and see if you are one of the few lucky owners of an SP-600 with factory original ceramic disks!

Now that we have decided we should replace all the BBODs, just how many do we need and what types and values are they?

In my JX-6, I found I had thirty-eight BBODs with a value of .01mfd and sixteen BBODs with a value of .022mfd. A check of some later models show a factory change was made to substitute the .022mfd caps with .01mfd caps. This is supported by a military work order authorizing the change, although I can't reference that MWO number off hand. The consensus is there is no need to get two different values, you can replace all fifty-four caps with .01mfd, although I used both .01 and .022 as called for since I already had them available. There are fifty one caps used for bypass and three used for coupling. In my case I used what I had in my parts bin, .01 or .022 ceramic disks at 1000V for bypass and .01 mylars at 630v for coupling.

Prior to starting the actual recapping, I traced out the schematic locating all the caps as per the parts list.

Then I used the various pictures from the manual to try and locate visually the area where I anticipated the cap should be. I then performed a detailed resistance check of the whole radio based on the manuals resistance chart and found that all values but one were well within 10%, in fact most were within 5%, so I have not yet replaced any resistors. The one area that was out of spec was the cathode of the 6V6. This was supposed to be 380 ohms but read 1.45 ohms. This turned out to be a failed bathtub cap, a large 10mfd x 100v cap for cathode bypass. I replaced this with a standard 10mfd x 250v cap I had spare. With the new cap the resistance was dead on at 380 ohms. Someday maybe I'll mount the new cap in the old can so it looks "original". Finally, after a good visual inspection of the radio, I brought power up on the radio slowly (temporarily swapping the rectifier for a solid state rectifier set and using a variac) prior to making any changes at all, in order to be able to make a before and after comparison.

Once the radio was fully powered up, I found that it had very weak and distorted audio, capable of picking up only a few of the very strong local AM broadcast stations. The bands above 1.34mc appeared dead. At that point I began to make actual changes to the radio.

From this point on I'll summarize the steps I went through for the re-capping. I did it by trial and error, particularly the error phase, so maybe this will help get you in the right frame of mind for what might at first glance appear to be a daunting task.

At the end of the article is a list of caps along with a description of where it is located. This location is often identified as being at the "cold" end of a component. "Cold" refers to the connection point closest to ground. I've also indicated whether the cap at that position is used for bypass or coupling. Again, I chose to use ceramic disks at 1000v (as I had them handy) in the bypass locations and mylar film at 630v (again because that's what I had available) for coupling caps. I had a note from a couple people who indicated they had the models that came factory equipped with ceramic disks and that not only were the caps changed to ceramics, but the values were all .01mfd, i.e. the .022mfds had been changed to .01mfds. This supports the MWO mentioned previously.

My final summary of caps replaced is sixteen of the .022mfds, of which four were split wide open and thirty eight of the .01mfds, of which fifteen were split wide open, plus the one shorted 10mfd in the 6V6 cathode circuit.

Re-capping an SP-600: Refer to figures 3 and 4 at the end of the article.

In order to make this project appear more manageable I identified seven unique sections for recapping. Except for the underchassis, each section represents an area that requires disassembly of some sort to get to the cap(s) that need replacing. Some areas may contain as few as just one cap to be replaced. I have not provided complete instructions, just tips. Some things may seem strange but if you are looking at the radio while reading these instructions it should become clear how to proceed.

The sections are:

(1) RF Deck (Fig 3)

(2) T1 Pod (Fig 3),

(3) IF transformers (Fig 3),

(4) Band switch turret coils (Fig 4)

(5) T9 (HFO oscillator section) (Fig 4),

(6) Xtal Frequency Control Unit (Not on plain J models) (Fig 3)

(7) Underchassis (fig 4)

A. First Steps: This should be the removal of the Xtal Frequency Control Unit (FCU) (this assumes you have an SP-600 with the XFCU) as this makes access to the RF deck and especially the T1 pod is much simpler. Refer to figure 3. Removal of the right side panel makes access to T-1 much easier.

1. Remove the Xtal selection knob and shaft by loosening the various couplers attached to the shaft between the front panel and the FCU and slide it out through the front panel.

2. Loosen the coupler on the Delta Freq control shaft and slid it towards the FCU so the coupler is completely on the long shaft from the FCU.

3. Remove the bracket from the bottom of the FCU that goes to the long spacer near the power transformer. One end is held by a nut at the power transformer. The other end of the bracket is slotted and just slides into a groove on one of the supports for the FCU, so there is nothing to loosen on that end.

4. Unsolder the cap that comes from the FCU to the switch on the front panel.

5. Flip the radio over; locate where the wire harness from the FCU passes through the chassis. Unsolder the wires from their respective terminals. Make notes and keep track of where they attached -- they are color-coded.

6. Remove the four screws that secure the Power Supply filter assembly to its set of spacers and carefully lower the filter assembly, there is no need to unsolder anything here, just support it carefully.

7. With the filter out of the way you can get to the four screws that secure the spacers for the FCU, remove these screws while supporting the FCU so it doesn't fall.

8. Reposition the PS filter assembly and put back in a couple screws to temporarily hold it in place.

9. Flip the radio back over and carefully lift the FCU out, be careful of the long shaft so it doesn't bend and damage the Delta Freq capacitor when removing the FCU.

10. Remove the twelve screws from the FCU cover and open it up. There are two BBODs that need replacing in here. Reassemble the FCU and set it aside, don't reinstall yet!

11. 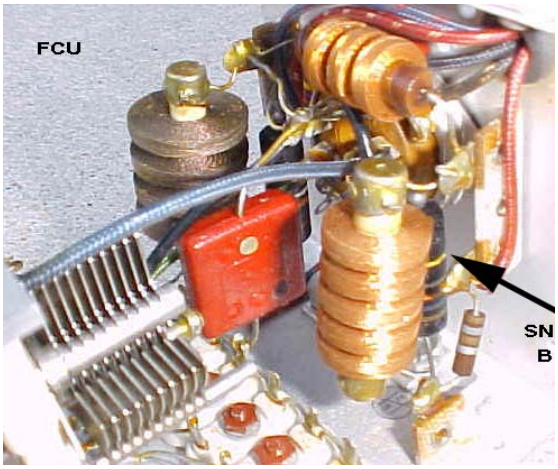

FCU

B. RF deck - refer to figure 3

1.First remove the cover over the tuning caps (9 screws), then remove the screws (8) from the RF deck itself.

2.Remove the cover from the T1 pod (two nuts)

3.Unsolder the wires from the RF deck to the T1 pod (6 wires); keep track of them by the color code.

4.Unsolder the wires from the RF deck to each tuning capacitor (total of 12 wires, three for each tuner cap section)

5.Unsolder the ground straps from each tuner cap to the RF deck (4 straps)

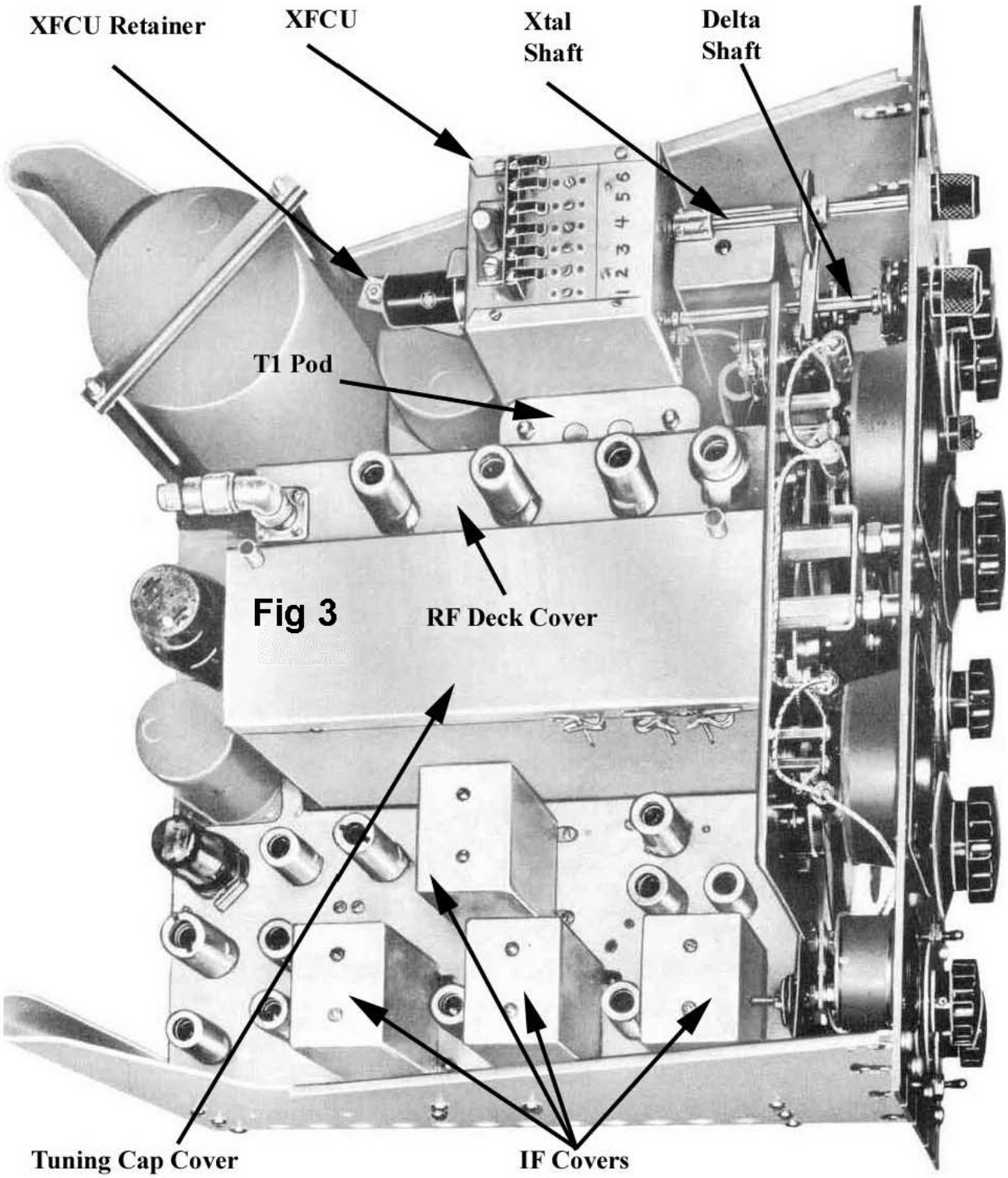

1. Remove the cover over the bandswitch turret assembly underneath the chassis.

2. IMPORTANT!!! Before removing the RF deck, do one of the following:

Option A. Position the band switch 1/2 way between bands so no band switch coils are engaged in the fingers of the RF deck. I found this a little hard to gauge.

Option B. Completely remove a set of coils for one band, then turn the band switch to this position. Since you'll have to take a set of coils out anyway to replace some BBODs, I chose this option, removing the entire set of coils for the .54 to 1.35 band, then turning the band switch to select this band. When removing a coil, be careful you don't put stress on the ceramic and crack it. The retainer clips come out pretty easily, and will go back about as easy as long as you're careful. Use of a curved hemostat or rt. angle small needle-nose pliers to grab them is helpful.

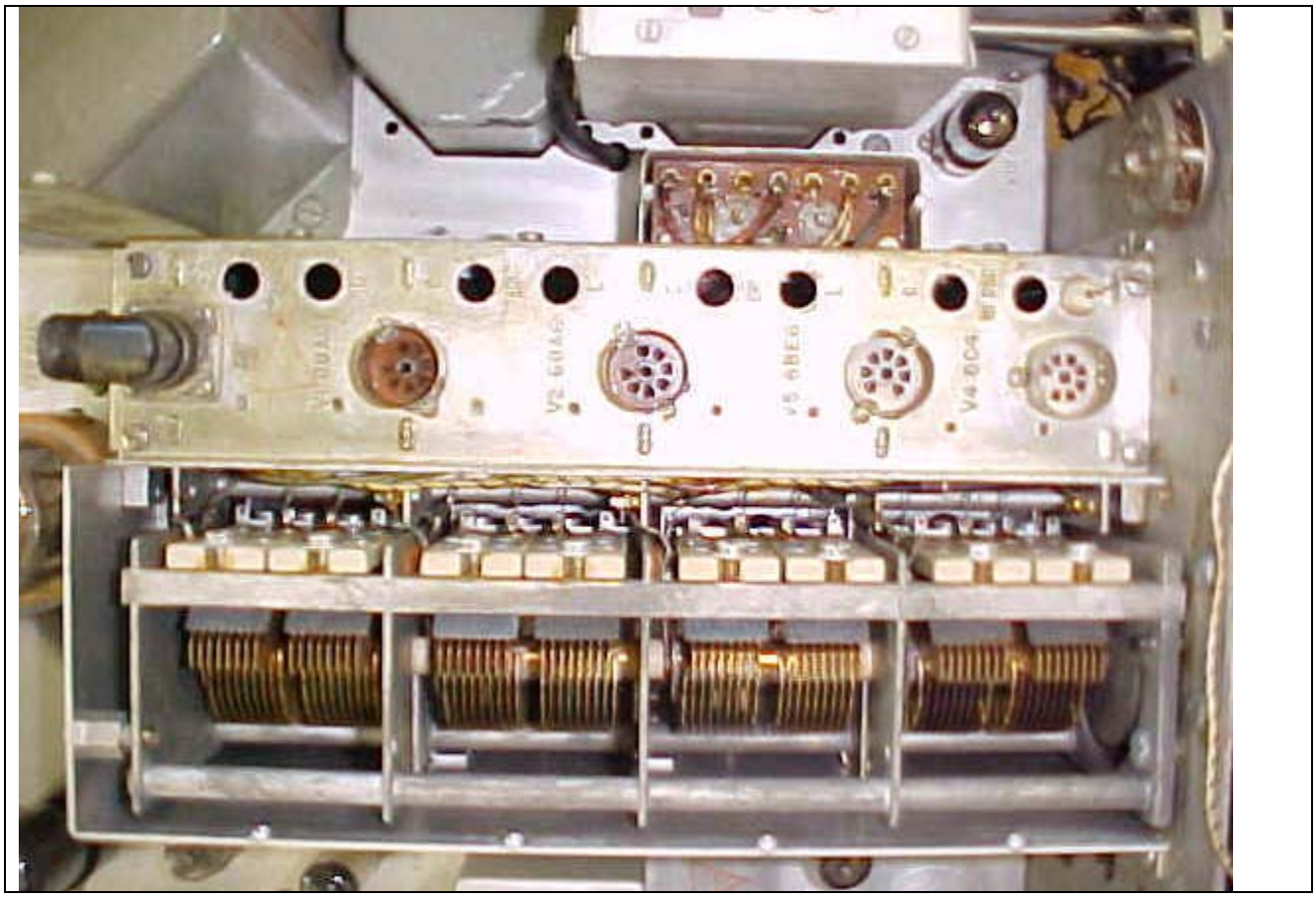

Top view of receiver with the RF deck cover removed

1. Once the band switch is positioned so no coils are engaging the RF deck fingers, you can carefully remove the RF deck by pulling upwards. BE CAREFUL as it's a tight fit and you don't want to damage the ceramic plates for the fingers at each end of the RF deck.

2. After the RF deck is out, you can replace the BBODs. They are obvious. There were a total of 22 on my RF deck, all .01mfds. It would be advisable to check all resistors in the RF deck, leaky BBOD's will cause many of them to overheat and increase in value. Now's the time to replace any that are more than about 10% from nominal value.

3. When all the BBODs are replaced, double check your work, you don't want to have to remove that deck again to repair a cold solder joint or short!

4. Set the RF deck aside for the moment.

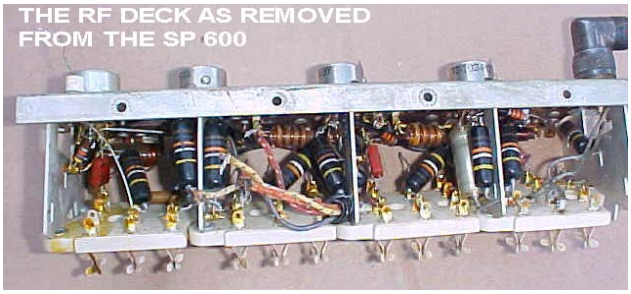

RF Deck before

RF Deck after

C. T1 Pod - Refer to figure 3.

1. The top cover should already be off. Complete the disassembly by removing the side cover (6 screws). This is why we left the FCU out, these screws are pretty difficult to get to with the FCU installed.
2. There is only one BBOD to replace in the T1 pod.
3. Reassemble the T1 pod side cover.

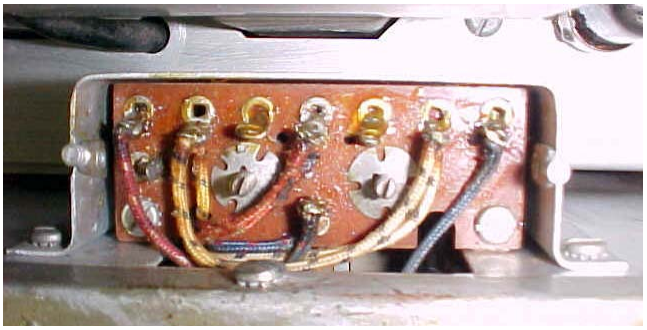

T1 pod top view. There is one model that has seven wires and isn't compatible with any other models.

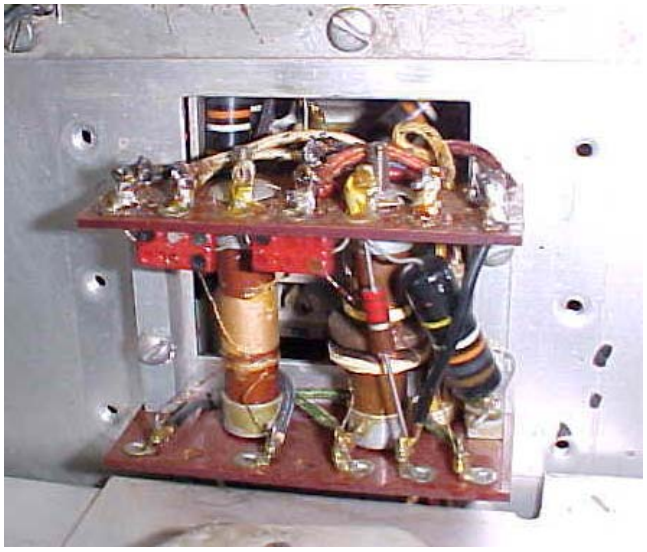

T1 pod – cover removed

D. RF deck, FCU and side panel re-installation - Refer to figure 3.

4. Carefully re-install the RF deck. Watch the ceramic plates. Resolder each of the 12 wires to the tuning caps, resolder the tuning cap ground straps and resolder the wires to the T1 pod.
5. Once the RF deck and T1 pod cover is reinstalled and secure, re-install the FCU using the reverse procedure of the removal instructions. Be careful not to damage the protruding shafts. Replace the side panel if it was removed.

E. Checkpoint

When everything is back together, you may want to make a test to see how it's working. This is assuming you had already done a resistance and power check originally and were satisfied as to its previous operating condition. This test will at least see if there has been any improvement or if something has now gone completely dead. Make sure you aren't testing on the band that you removed the turret coils from. You don't need to re-insert the coils for the band you removed just yet.

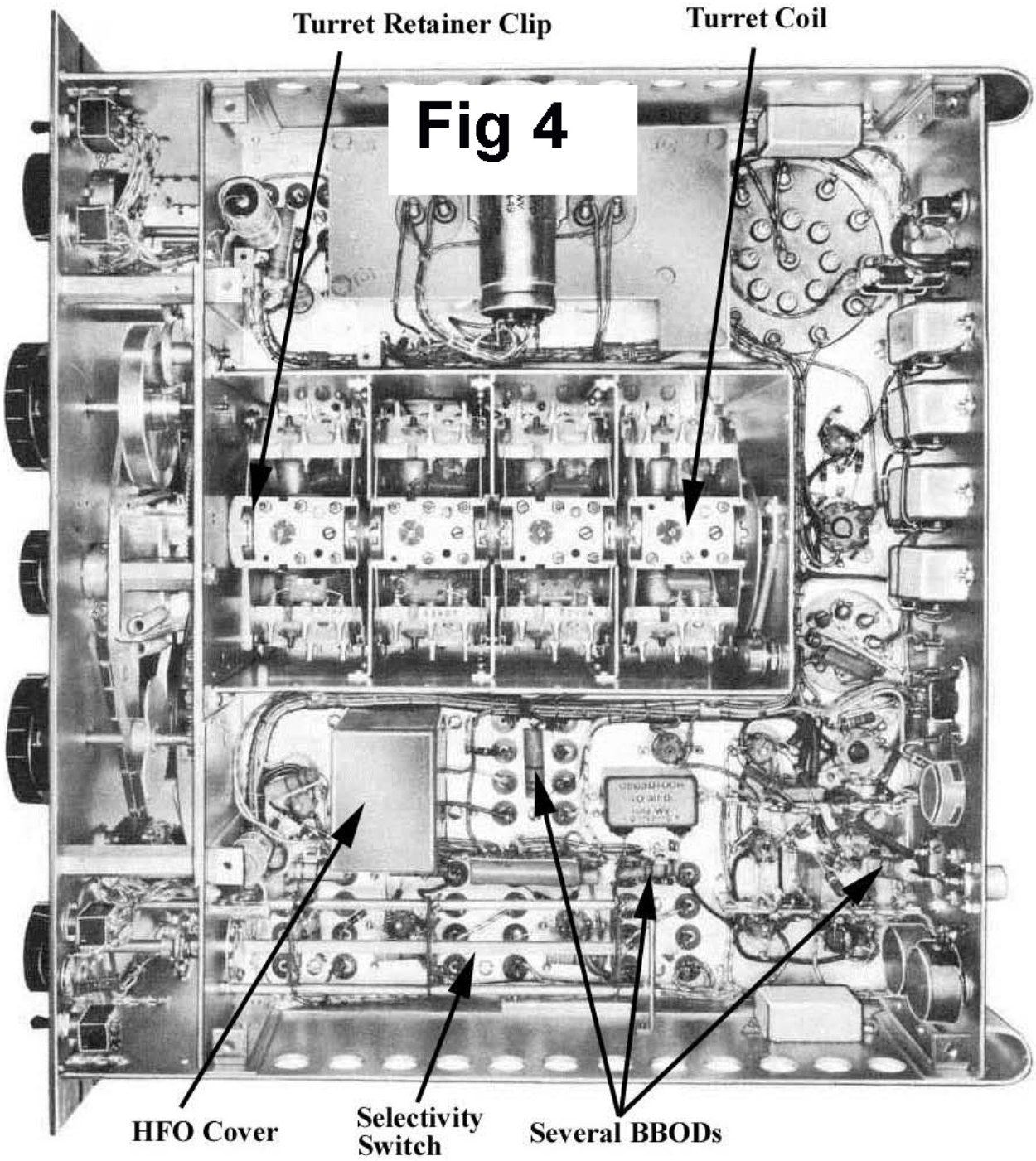

figure 4

F. Turret Coils - Refer to figure 4.

As long as you have one set out (if you chose to use this method) you may as well replace the BBODs on these now. They are easy to see as you rotate the band switch so you only need to remove the coils that contain the BBODs, there are 6 coils, three at the .54-1.35 band switch position and 3 at the 1.35-3.45 band switch position. The coils for the other bands, at least in my radio, did not use BBODs.

After replacing the BBODs and reinstalling the coils you may want to run another test to see what progress is being made.

G. IF Transformers - Refer to figure 3, and below. Again, removal of the left side panel makes access to the IF cans and under the selectivity switch much easier.

1. These are easy to do as the covers come off quite nicely and once off, with the tubes out, it's easy to get to the caps. It's not necessary to remove the cover for the Crystal (T3) IF unit as it turns out, on my radio at least, the BBODs were on the terminals on the bottom of the chassis, not in the IF can itself.
2. Again, after replacing the caps you can run another test to see that at least nothing has degraded.
3. Once satisfied, recover the IF transformer assemblies. Make sure the ground straps are still on top of the adjustment posts.

H. T9 HFO assembly. Refer to figure 4.

1. This is under a metal shield next to the selectivity switch assembly. You'll need to remove the four screws and lift the shield off, be careful of the phenolic locator board inside the shield, it's used to keep the circuit board upright so it doesn't vibrate and short out against the shield. Make sure it's installed correctly during reassembly.
2. Replace the BBODs (one of these was in a pretty awkward place, probably one of the hardest to replace).
3. Test the radio, then set the phenolic board and reassemble the cover.

I. Underchassis - Refer to figure 4.

This is the final step and relatively straight forward as it's easy to spot all the BBODs.

The ones under the selectivity switch were the most difficult to replace, however I found the following to be quite helpful. Unfasten the selectivity switch from the front panel and the rear bracket of the switch from the chassis. This allows the switch to be moved around somewhat based on the flexibility of the wires attached to the switch. This provided me with enough room to get under the switch and swap out the BBODs. Just be careful not to flex the switch assembly too much and break a wire, or worse, a switch wafer. That much stress shouldn't be needed as you only need a few tenths of an inch more clearance to get to the BBODs. You may find it easier if the side panel is removed.

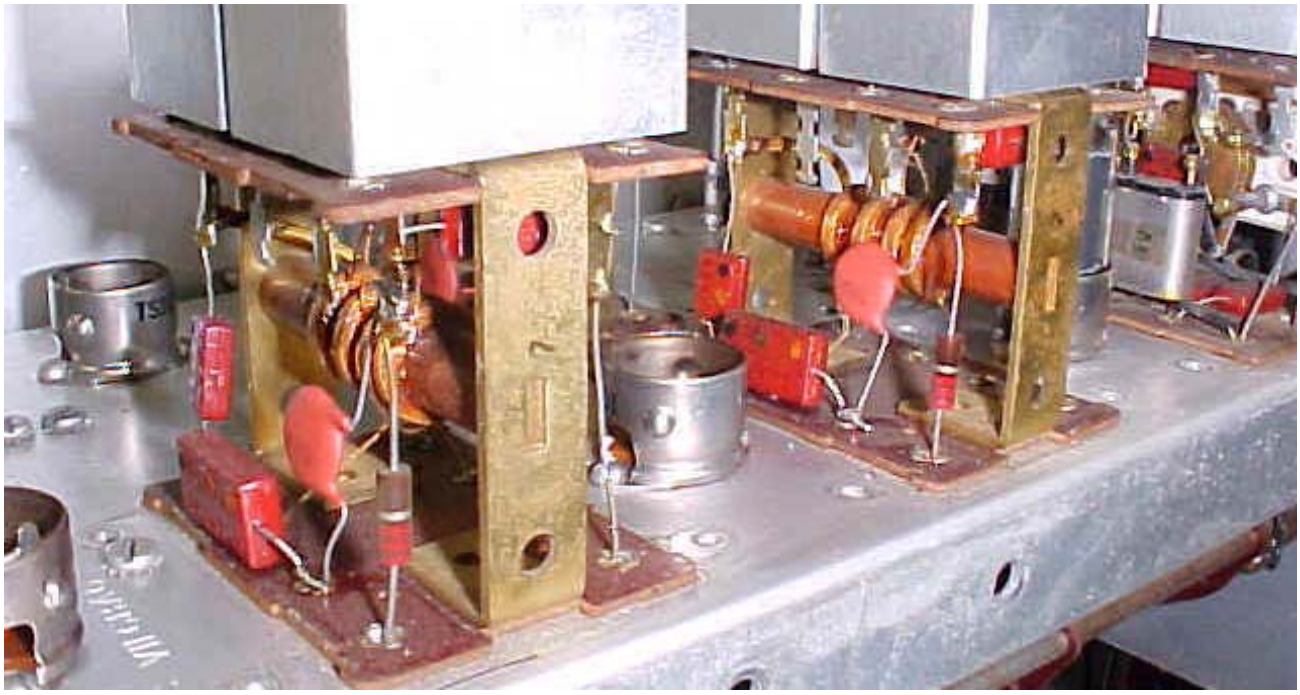

IF Transformers after re-capping

Well, that's the summary. I'm sure I left out some little, but obvious steps, the idea is just to show how the job could be broken down into manageable steps. Once I had completed the ground work of tracing out the schematic and identifying the locations on the figures I spent two evenings performing this operation. One evening to do the FCU/RF deck and T1 pod, and the second evening doing the remainder. In conjunction with this I was having several conversations with chaps on 29.0mc AM as the band has been open evenings quite a bit. So figure two pleasant evenings for this, you could probably do it in one evening if you didn't spend time trying to ham it up as well!
As for the results: After the recapping was complete, I fired up the receiver and, without doing any form of alignment or having the need to perform any troubleshooting other than the one original bad resistance check, the radio went from virtually very weak audio and picking up only distorted AM signals from a couple local AM broadcast stations to a completely functioning and beautiful sounding radio. It's amazing what just replacing those caps does. The dial accuracy is fantastic, I dialed up both 10.0mc and 15.0mc and WWV was right there.

Eventually I did perform an alignment but it made very little improvement over what was accomplished by the simple task of performing this recap. Believe me, the two evenings spent replacing everything was far, far better time spent than trying to troubleshoot problems one by one in an attempt to avoid replacing a cap or two that might not need it.

Hope someone finds this useful and if anyone has any additional suggestion, tips or corrections, hop in!

I recommend that you have a copy of an SP-600 manual when attempting these changes.

I made good use of the wealth of material available from the BAMA ftp site ftp://bama.sbc.edu/ and the R-390/SP-600 CD-Rom from Jeff Adams jadams@mcqassociates.com. Both contain very good photographs of the chassis with parts clearly labeled which you'll find useful in identifying the location of the various components mentioned in the following cross reference.

BBOD Replacement Capacitor Cross-Reference list for the SP-600

C = used as Coupling cap, B = used as Bypass cap .01 mfd caps

Symbol	Location	Symbol	Location
B C3	T10	B C105	V7 pin 6
B C5	T11	B C66	V5 pin 2
B C19	V1 pin 1 cold end R1	B C68	V5 pin 6
B C20	V1 pin 6	B C70	T1
B C21	V1 pin 6 junction of R3/R4	B C71	V4 pin 1 cold end R29
B C22	V1 pin 5 cold end L7	B C72	V4 pin 1 cold end R30
B C23	V1 pin 6 cold end R4	B C73	V5 pin 6 cold end R28
C C24	V1 pin 5	C C74	V4 pin 1
B C27	T16	B C115	V9 pin 1 cold end R43
B C29	T17	B C116	V9 pin 6
B C40	V2 pin 1 cold end R13	B C121	V10 pin 1 cold end R51
B C41	V2 pin 1 cold end R12	B C122	V10 pin 6
B C42	V2 pin 6	B C127	V11 pin 1 cold end R56
B C43	V2 pin 5 cold end R15	B C135	V12 pin 6
C C44	V2 pin 5	B C153	L48 (power supply area)
B C47	T22	B C154	L49 (power supply area)
B C49	T23	B C155	L49 (power supply area)
B C61	V3 pin 8 hot end R25	B C165	V1 pin 5 cold end R6
B C64	V3 pin 5	B C166	V2 pin 6 cold end R14

.022 mfd caps (can use .01mfd as well)

Symbol	Location	Symbol	Location
B C98	T2	B C123	T5
B C102	**Off single conv. Switch***	B C136	V13 pin 5 cold end R76
B C103	T9 (HFO can)	B C146	V16 pin 6
B C104	T9 (HFO can)	B C148	V16 pin 1 cold end R81
B C106	V6 pin 6	B C156	L50 (power supply area)
B C108	T3 (underneath chassis)	B C157	L50 (power supply area)
B C109	T3 (underneath chassis)	B C162	V14 pin 5
B C118	T4	B C167	Between V18 pin 1 and T1

*** Absolutely Critical. See following notes.**

Editors Note: These part numbers are valid for this model (mostly). One needs to verify each individual radio as Hammarlund made numerous chassis, schematic and parts modifications even within a specific J or JX designation. Please see Andy Moores's article on chassis identification.

TM 11-831 can be invaluable in these situations as it has both pictures as well as schematic changes noted.

Fig-5.jpg I deleted this picture of the SP 600 with parts callouts as it was specific to Ray's receiver. Having a copy to TM11-851 should provide the bottom view specific to the model you are re-capping. Editor

Some General Notes From Other Experienced SP 600 Rebuilders

The model or "suffix" number has nothing to do with it may or may not have black tubular capacitors. The serial number is the key indicator. Any SP-600 with a serial number of 175XX or higher came from Hammarlund with ceramic disc capacitors. All SP-600's were built with consecutive serial numbers independent of model/suffix number.

Reference note from Les Locklear: Parts were subbed during production runs. Don't trust nameplate for what parts are actually inside. Also the avc chain mica caps are usually bad at this point due to age, etc. replace any caps and resistors in that avc chain, as they are usually suspect.

This from Andy Moorer who has restored many, many SP-600s is to shotgun replace the screen and plate de-coupling resistors in the first two IF stages as those tend to drift and to be under-specified for power. [Also RF amp stages] I think they're all spec'ed at 1/2 watt (Some manuals show 1/3 watt), but the modern 1-watters are mostly physically smaller, so fit in there nicely.

When I bought my SP-600, the plate de-coupling resistor on the second RF amp was burned through, so no B+ on the second RF amp, thus really dead reception. I had to pull the RF deck for that reason and while there, of course, I replaced all the BBODs with, in my case, OD's**. I replaced the burned out resistor and others out of spec, but wish now that I had shotgunned all the other resistors in the first two RF stages. (Use 1 W metal films).**

I have restored several JX-26 units- some of them had ceramics but most of them have the dread BBOD's.

I agree - do not even power it up until you replace at least C102. If that one shorts, it takes one or both of the big chokes with it (L51, L52). (Begs the question: why no B + fuse?)

AGC Characteristics

Well, some of them have slightly different schematics, the best of the bunch imho is the JX-14 and it's successors. It had the better avc characteristics of all of the various SP-600's. Les Locklear

Editors Note: Please read Andy Morrer's differing opinion about the JX 17 model.

Also check Chuck Ripple's audio improvement source if you are planning a major part replacement program.

About replacing the paper caps in an SP-600:

I've used .022 uF/600V Sprague type 715 Orange Drops, and I've used 02 uF/1000V ceramics. The ceramics work better (the IF leakage into the RF at 910 and 1365 Kc is definitely better with the ceramics, particularly if you keep the leads as short as possible). Hammarlund specified ceramics for many of these caps in 1955, then apparently went on building radios for years with all paper caps. They must have had a big inventory of the paper caps they needed to use up. . . .

Note: these are all bypass caps on the DC supplies -- none are audio coupling caps, where ceramic would be a poor choice. There are only two audio coupling caps -- C143 & C149, both 5100 pF mica. You can change them to .005 or .01 uF Orange Drops if you want, and will realize some improvement in the audio.

One thing to make sure of is that you get EVERY SINGLE paper cap out of the radio. Some are hiding in the RF box, some in the IF cans, some in the turret assembly, and some beneath wiring and switches under the chassis. There are about 51 in all.

You don't need to worry about the values (some of the original caps are .01, some are .022, and it varies from radio to radio). Use all .02 or .022 and you'll be fine.

Best regards, Don

Products From Andy Moorer

I am offering some CD-ROMs for sale, mostly as a convenience for my public. If you are having trouble downloading these manuals, I will make you a CD-ROM of the ones you want. All CD-ROMs are $20 each. I don't have a web mall, so just email me with your mailing address. I take PayPal, money order, cashier's check, personal check, wampum, stamps, old radios or radio parts, or anything interesting and/or nifty that you think I'll go for. Also, I understand that some folks don't have any good way to print out these PDF files. As a service, I will sell you a printed copy of any manual or paper on this web site for $15 (with a few exceptions - TM11-851 is $45, for instance).

SP-600 CD-ROM. This includes all the PDF files on this web site that pertain to the Hammarlund Super-Pro SP-600.

R-390 CD-ROM. All the PDF files pertaining to the R-390 family of receivers.

PRINTED MANUALS. All the BC-348 manuals, the R-5007 manual, all the SP-600 manuals (except TM11-851), I will sell you a printed copy, comb-bound, for $15 each, postage in US included. The schematics are as 11x17 fold-outs.

PRINTED TM11-851. Sorry - I have to charge $45 for this one due to the size and the difficulty of printing the schematics.

Editors Note: Having produced tutorials by desk top publishing, these manuals are a bargain. I was fortunate to get an original TM11-851 when I bought a couple of SP 600's. I wouldn't copy it for anyone at twice the price and I've never seen one come up for auction on epay.

Hammarlund SP-600 Receiver Modifications

From The Hammarlund Historian

This section is provided thru the graciousness of Bruce Stock, AB7YD, and is used here with his permission.

The following modifications were produced in order to improve what the author feels are several shortcomings in the SP-600 receiver. My goal was to minimize the impact of the changes to the SP-600 to the point where they could be easily reversible if some future custodian of the receiver wanted to do so.

The areas where I feel the SP-600 needs help are the following:

1. The RF signal level meter is very non-linear and is not calibrated with S-units. It is useful only as a tuning indicator.
2. The AGC employs a large amount of delay, which is partially responsible for the non-linearity of the S-meter.
3. SSB detection with the existing circuitry is very poor, and the existing AGC is not suited for SSB reception.

In making the following modifications, I removed as little as possible from the SP-600 and left all original wiring in place. New wiring was done with a single color of easily recognizable modern wire for ease of identification by any future restorer.

These modifications are for an SP-600 JX1, so there may be minor circuit differences if you are working with a later model receiver. Since this will not be a "cookbook" set of instructions, you will have to know enough about your particular model to make your own decisions about the best way to incorporate each particular change.

I. The AGC modifications. It is best to start with the AGC modifications, because both the S-meter and product detector changes depend on them. There are three problem areas I wanted to address with the AGC changes. First, the bias applied to pin 5 of V14, the AGC detector, causes the receiver to remain at maximum sensitivity until quite strong signals are received. At that point the developed AGC voltage finally overcomes the bias and is fed back to reduce the gain of the appropriate stages. In my receiver, dropping the value of R66 in the AGC delay divider below a value of 4.7k caused some distortion to AM broadcast stations. So I settled on changing R66 to 4.7k, which reduces the amount of delayed AGC significantly.

A second problem with the AGC is that the existing filtering is insufficient to remove some of the variations due to audio modulation on the incoming carrier. This is easily corrected by adding a .002 ufd capacitor in parallel with C140. Note that instead of replacing C140 with a .003, I have left the original in place to make restoration easier.

Finally, some further reconfiguration of the AGC circuit is required to smooth a few further kinks in the AGC action. The final circuit is shown below. Wherever component parts list numbers are used, the original part is unchanged. Wherever part values are given, it is for a newly added part. If both are given, it means an existing part has been changed in value.

The 10 megohm resistors were added to provide for a slow discharge time constant which will be more effective on SSB reception.

The 1nxx diode on the left ensures that when the RF gain control is reduced, thereby pulling the AGC line strongly negative, the new S-meter will not be pulled upscale. Instead, it will fall toward zero as the output of the AGC detector drops

Note that R97 (3.3meg) is removed and S8, the AGC/Manual switch, has been rewired. The other half of S8 going to the old RF/AF meter switch is no longer used, so the wires can be disconnected and taped.

Also, note that C139 is changed in value from 7 to 50 pf.

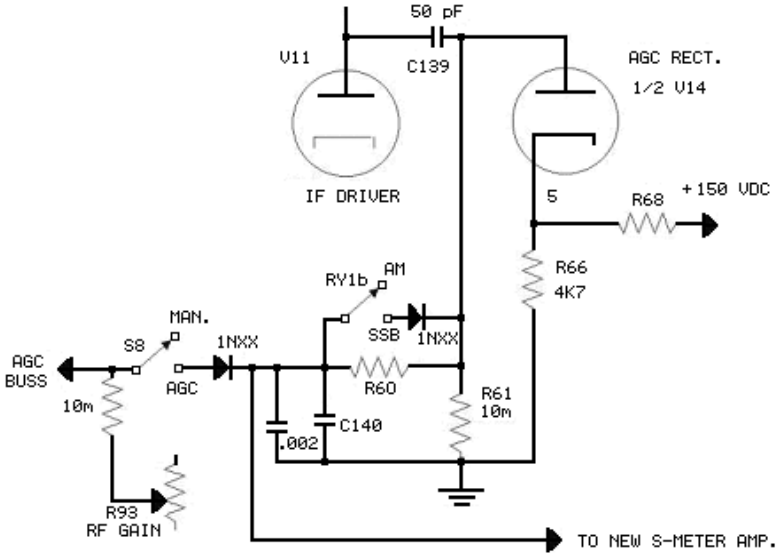

This provides a stronger drive for the fast-attack AGC mod that will be added with the product detector. The right most 1nxx diode and relay contacts are not to be added until the product detector is installed. They are shown here only for clarity as to where in the circuit they are installed.

All the semiconductor diodes added for this project are garden-variety types, so I have used the 1nxx designator. Use whatever you have.

II. The S-meter. The only hard part of the S-meter modification is making a new meter scale for the existing meter. I'll describe the steps I took, and let you decide how best to proceed depending on your circumstances. First I removed the S-Meter dial face from my HQ-170 receiver and used a flatbed scanner to scan into my computer. There I cleaned up the image and prepared it to be printed out. I used my printer's scaling options to get the printed dial scale to approximate size. At this point I removed the dial scale from the SP-600 meter and superimposed the two, with a strong light behind to see how close to the needed size I was.

If you look at the original scale, you will see that the existing RF level meter swings through an arc of only about 60 degrees. There is plenty of leeway in the existing meter mechanism to accommodate about 80 degrees of swing, and I printed out the final version of my new scale to take advantage of this.

Since the meter scale is illuminated from the rear, a transparent plastic blank, identical in size to the original meter face was constructed. I used clear plastic from the lid of a small plastic box, then overlaid the original meter face and scribed the outline and screw holes. I used a router bit at low speed on a Dremel tool to remove most of the excess plastic, and finally used a file to bring the dimensions down to the size of the original scale. The paper scale was finally glued to this new transparent blank, yielding a nice looking, and translucent dial face. You may want to make several test alignments of the scale, the blank, and the meter movement to be sure you have it right before you finally glue the paper in place.

The original meter mechanical zero was uncoupled in order to be able to set the needle as far to the left as possible without physically contacting the meter pole piece. Finally, the original needle bumper strips were repositioned to allow the new wider needle swing, and the meter was reassembled and remounted on the front panel. All the leads to the original meter were removed and taped.

Note that when you remove the original wires from the upper end of the S-meter zero pot (R69), you must ground them. This is necessary to provide the correct DC return path for the audio detector.

The new S-meter amplifier circuit was built up on a small board that was conveniently mounted on the bracket that holds the rear of the selectivity switch. The circuit for the new S-meter amplifier is shown below.

The circuit uses a VM0300 P-channel, enhancement-mode, FET. The transistor is available from Active Electronics, Inc, and no doubt other parts suppliers as well. There is nothing unique about this part, and it is likely that any similar P-channel enhancement mode FET will work as well. The original S-meter zero pot is used to bias the FET to the point where it is just turning on with no signal input to the receiver.

The cathode bias of the audio output tube is used to generate the needed positive voltage supply.[1]

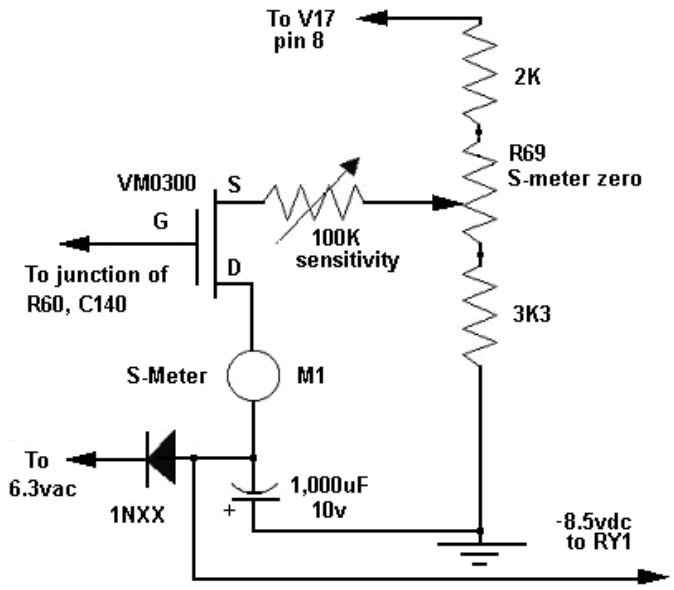

[1]**Ed Note: Since the cathode bias V17 exists only when the tube is inserted and properly operating, one might want to generate the positive voltage from a rectified filament supply to prevent circuit damage if the audio output tube is removed or becomes defective during operation.**

A negative 8.5 volt supply for the drain is obtained by half-wave rectifying the receiver filament voltage. This supply is also used to power the relay I used to switch the new product detector into the audio amplifier.

The meter zero pot is adjusted so that the meter needle just rises off the low end of the scale. The sensitivity pot is adjusted so that the strongest received signals will just cause the meter to peg on the right hand side.

III. The Product Detector. The product detector uses the circuit from the SX-101A receiver. I've installed it in several other receivers, with very good results in all cases. Since V12, the BFO buffer, will not be required, it is not necessary to drill any new holes for the product detector tube.

Begin by clearing the unneeded components from the V12 socket. In my receiver, several parts which feed both V12 and V11 were terminated on V12. They must be moved over to V11 first, so that it will continue to operate properly. The BFO injection pot is no longer needed.

To switch from AM to SSB, the audio amplifier input must be switched from the output of the AM detector to the output of the product detector. You can do this by running shielded leads to the front panel Mod/CW switch, S7, but I chose to use a Radio Shack 12vdc DPDT relay instead. The relay is mounted near the AM and product detector location, so long shielded leads are not necessary. S7 now energizes the relay, which switches the audio amplifier over to the product detector output. It also completes the circuit for a diode I placed across R60, to give a faster attack AGC characteristic on SSB (refer back to the AGC schematic for a better view of the diode location). The product detector circuit is shown below.

Originally, S7 also had a second set of contacts used to switch in C137, a .22 ufd. capacitor, to slow the AGC time constant for CW/SSB reception. I preferred the flexibility of having the AGC time constant independently selectable from the AM/SSB mode.

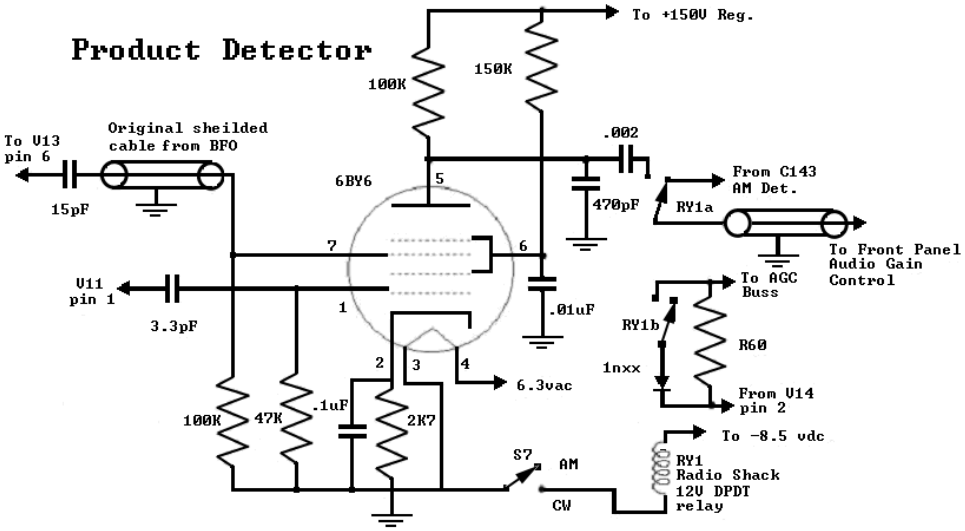

Sometimes I want long AGC time constants on AM when there is rapid fading or controlled-carrier modulation. For this reason, I removed the original RF/AF meter switch and replaced it with a SPST switch that connects a .1-uf disc ceramic capacitor to ground from the AGC buss. This gives an adequately long time constant for SSB or fast fading AM conditions. The new switch becomes the FAST/SLOW AGC selection.

When the new product detector is connected to the V13 BFO, it will change the center frequency of the BFO somewhat. Be sure to readjust the BFO center frequency, by adjusting L44, to coincide with the center of the receiver pass band.

You will select upper or lower sideband by setting the front panel BFO frequency knob to between 1 and 1.5 khz above or below, respectively.

Updating the SP-600

BY Douglas A. Blakeslee, W1KLK
Adapted from a QST article of Aug.1970 by Perry A. Sandeen June 2009

Modifying a piece of surplus equipment to get operation up to current standards is a popular amateur pastime. With the sophisticated gear now on the surplus market a ham can often come up with outstanding performance for a relatively-small monetary investment. This article covers reworking the SP-600 receiver, but the circuits used may be adapted for use with any receiver of similar vintage.

The R-274 receiver series (sold commercially as the SP-600 by Hammarlund and the SX-73 by Hallicrafters) has been released in quantity by the military services to MARS and surplus outlets.

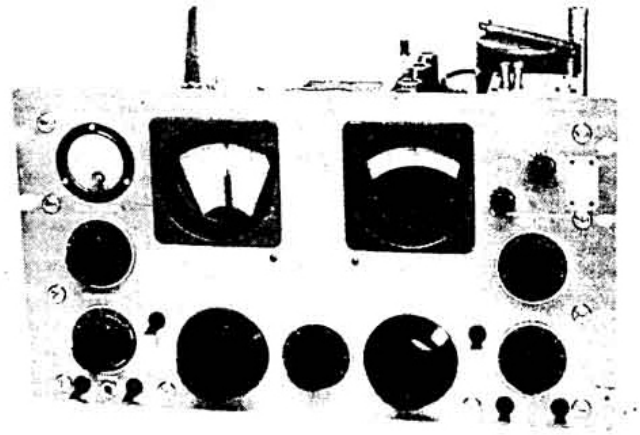

Modified SP-600. The new panel switches are Cutler-Hammer type 8373K27C. A switch mounted in place of the TUNING LOCK cuts the HFO off when an external oscillator is used.

These receivers, which were used in intercept, point-to-point and mobile communications by the Army and Air Force, have largely been replaced by the R-390A. As the available supply has increased, the price has dropped to the point where a R274 is an attractive buy as a general coverage receiver. It is a single-dial type covering 0.54 to 54 MHz in 6 bauds, providing a close-to ideal tuning rate for vhf (with converters, of course)! The objectives of the modifications made to the receiver are to improve the ssb-cw performance and to generally make the receiver suitable for amateur service.

Circuit Changes

As originally designed, the SP-600 is a poor performer on ssb. It has a lot of amplification in the i-f stages and a low-gain audio stage. The BFO is amplified, hut it is still not unusual to get ten times the voltage out of the i-f that you get from the BFO - the inverse of the ratio needed for linear detection. If the rf gain control is backed off to reduce the i-f output so the detector can operate in a linear manner, there isn't enough audio gain to amplify the detected audio to loudspeaker volume. Obviously, changes arc necessary ill the levels audio gains of the receiver's "rear end" stage.

A product detector was added in place of the original 6AL5 diode detector, V14. Needing a high-transconductance triode for this circuit we chose the the-6J4 as it has s 7-pin base and would fit in the 6AL5 socket.

Other similar triodes made for TV front ends would work as well. The new detector circuit is shown in Fig. l.

It was necessary to separate the plate circuits of V11 and V12 - they were originally fed B-plus through a common choke - so that the output of the BFO buffer could be routed to the cathode of the product detector.

The output of the i.f driver, V11, is far in excess of what any detector can handle with the available BFO voltage. Raising the BFO level was not the answer, as the increased 455-kHz signal leaked into the i-f, producing lockup. The product detector input was capacitively coupled to the grid of V11, where the i-f level was about right for proper detector operation.

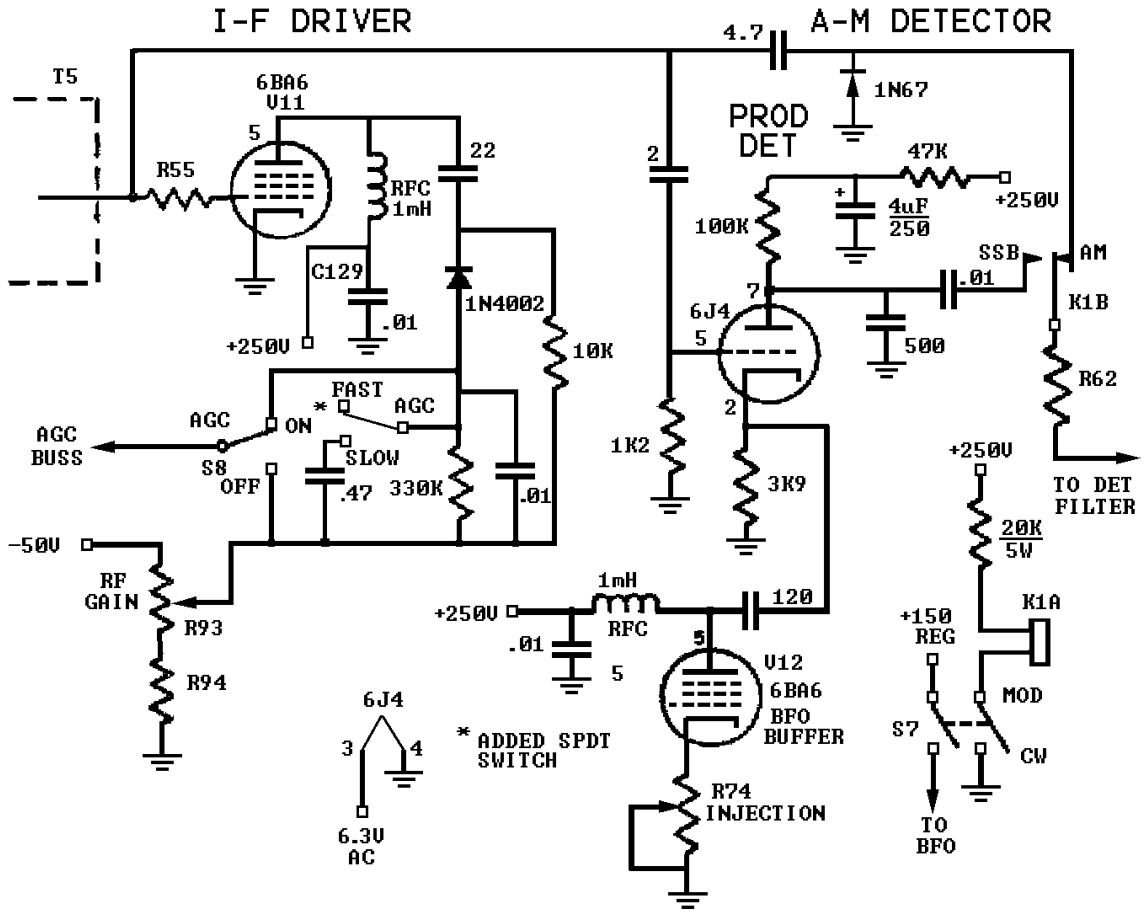

Even with the gain picked up in the product detector, audio output was still insufficient. The first audio amplifier in the SP600 uses one section of a 12AU7, with the other half of the tube functioning as the cathode follower on the output of the i.f. This output stage was not being used, so a 12AX7 (Fig, 2A) was substituted for the 12AU'7, and both halves were wired as audio amplifiers. This combination gave sufficient output to drive the 6V6 final output stage, With high gain in the audio stages, decoupling of each stage was necessary to prevent oscillation in the audio range,

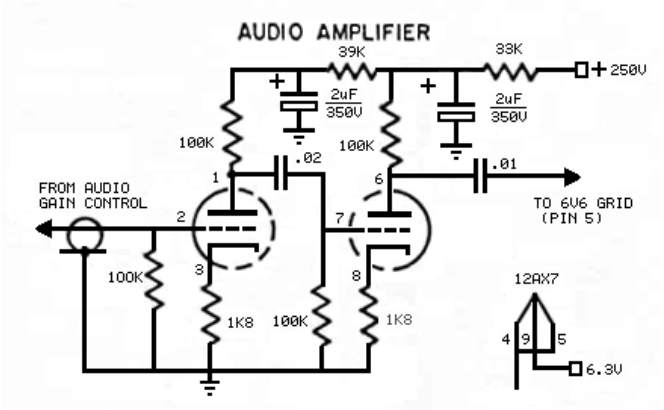

Fig. 2A

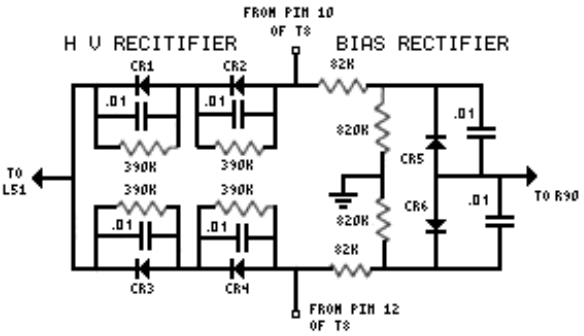

Fig.2B

With a 600 ohm audio output, a transformer is necessary to match 4-ohm speakers. These transformers aren't easy to find surplus, and are very expensive new. The author found that the standard public address 70-volt line transformer could be wired to give the proper impedance ratio, The transformer's 8-watt tap is connected to the receiver output, and the 4-ohm speaker to the 8-ohm tap (Fig, 4B).

With a general-coverage receiver it is desirable to be ab1e to copy a-m, so a diode detector was included. To keep the impute level in the same range as the product detector, this stage was also fed from the grid of V11. Reed relay K_1, operated by the MOD/CW switch connects the appropriate detector to the first audio amplifier.

With proper levels, it should have been possible to use the age for ssb and cw operation. The agc system in the SP-600 was not designed for this sort of service, however, and a rework was required. The original circuit had too slow an attack time and too fast a decay, Even manual control with the rf gain control was difficult. because of' the long time constant on the gain control line, caused by C137. This 2-uF capacitor is switched in when the BFO is turned on. It charges and discharges so slowly that. the manual gain control has a trine lag that is most annoying when operating.

The age circuit was rebuilt completely. The 6AL5 that was removed to make room for the product. detector also had served as the agc rectifier, so a silicon diode was used in its place. A front-panel switch was addled to select a fast or slow agc discharge time constant. The series resistors were removed from the age line to improve the attack time. With the components shown in Fig. 1, agc action will start at about 1µVolt. The rf gain circuit was modified so that manual gain could be used either with age or alone. The original switch $S8_1$ continues to select manual or automatic gain control. With four 6BA6 stages being controlled, agc action very smooth.

The rectifier tubes in the power supply were replaced with the silicon diode assembly detailed in Fig. 2B. Purchasing one of the commercial silicon replacements for the 5R4 would save the work of making up this assembly. Using a solid state rectifier will raise the B- plus voltage, which is not desirable. The lead from capacitor C161A is removed from the input slide of choke L5l and connected to the input of choke L52. Effectively, this changed the power supply from capacitor input to choke input, reducing the B-plus voltage to about the same point it was before the silicon rectifiers were added.

Making the. Modifications.

~~The~~ Some military versions of the SP-600 were given a liberal spraying with moisture-fungus proofing (MFP) during manufacture, which coats all the solder connections and makes it difficult to remove and add parts. It also covers the wiring, which after a few years of being heated and cooled, converts the once -flexible insulation into a hard substance that cracks easily. If the wiring in your receiver has reached. this advanced state of deterioration, be very careful as you work on the unit. During the modifications described in this article, the insulation on several leads cracked and fell oft, making an arduous extra job of' rewiring. This SP 600 was in poor condition when purchased but the units that have come through MARS channels are in much better shape. Look over the bottom aide of any prospective purchase before handing over your money. A better unit should not have the problems with wire and component failure that the author experienced

The best way to make the changes to the detector and audio amplifier stages is to cut the unused parts away from tube sockets V14 and V16 then carefully disconnect the filament connections and remove these sockets. Bolt in two new tube sockets - starting with a new socket makes rewiring so much easier! Reconnect the filaments and add the other parts shown in Fig. 1.

Additional wiring points are needed, so 5-1ug terminal strips should be added under one of the mounting screws of the phono-input strip for the extra audio stage, one end of Cl29 for the agc circuit, and on one end of the new tube socket at V14 for the product detector. The old agc filter components, when removed from V16, leave a number of free terminals which can be used for the plate circuit components associated with V11 and V12. The reed relay, K1, should he cemented to the top of C128, the only open space in the area.

To make some of the wiring changes on the switches, it is necessary to remove the front panel. All of the switches on our unit were on their last legs so we changed the lot while the panel was off. The meter range switch, S 11, a momentary type. It. Wasn't being used, so this switch was replaces by a standard SPST type which selects a fast or slow agc time constant. The S meter itself was broken beyond repair, so it was replaced by n surplus 0-l mA unit.

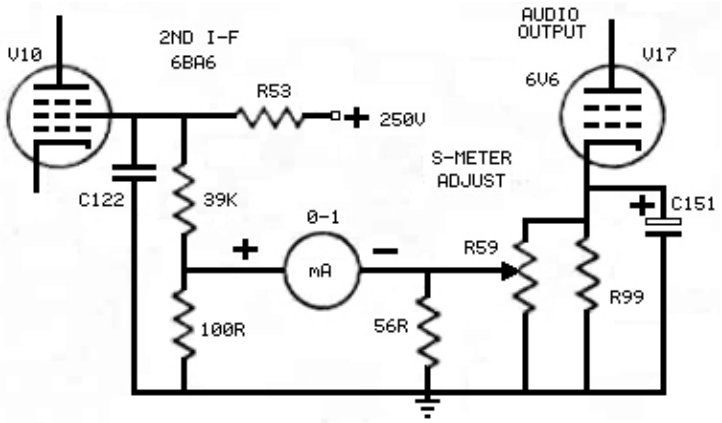

The 0.01 uF paper bypass capacitors in our SP-600 failed at an alarming; rate. Before the mollifications were attempted, three had failed and one went while we were working on the set. Three of these four capacitors were located in the rf amplifier/mixer sub-assembly, which is a four job to take out and replace. This deck is impossible to troubleshoot, also, as you can't get to the bottom side while it is "hot." With the last capacitor failure, the author replace all the bypasses in this section, and then all the rest in other parts of the receiver for good measure. (After a while a fellow gets a little tired of a smoking receiver.) The input coax fitting was changed to a SO 239 from the original two-pin receptacle provided.

While the rf deck was apart the sliding contacts on the main tuning capacitor were given a good shot of contact cleaner. Before modification the receiver had a tendency to jump frequency about one kilohertz every few minutes. The cleaning job solved the problem. The work was done all at once, so it wasn't possible to determine the exact culprits.

For those unlucky enough to have to remove the rf deck, a little explanation is in order, as the instruction book isn't any help. The best procedure is first to take all the screws out of the rf deck itself and the tuning capacitor cover. Remove the cover and the top of the mixer coil housing, which is on the side of the tuning unit sub-chassis. Unsolder all seven power leads **(all other models have 6 leads)** that go from the mixer coils to the rf deck, making a note of the color code and terminal connections so these leads can he reconnected later. Using a 150-watt iron with a long. nose tip, unsolder all of the leads coming from the main tuning capacitor sections to the rf deck. There are four leads per section. When all these leads are loose, pull up an the deck and lift it out. To replace it, turn the band switch to. a position half way between two band settings and gently slip the rf deck back in place, and rotate the band switch to a band setting. Then, re-solder all leads.

Another problem area was the BFO. The pitch central caused severe electrical noise in the receiver when it was rotated, This condition got steadily worse until the BFO would stop oscillating at certain pitch settings, and then it quit working entirely. Everything external to. the BFO can was checked and found to be OK. So, the author was left with the task of removing the BFO can assembly to see what had gone wrong. This job is even worse, if possible, than taking out the r.f. deck. The instruction book isn't any help here either, You must first remove the mounting plate holding the filter chokes, drop this whole assembly down, which will give access to the mounting bolts that secure the crystal oscillator assembly. Unsolder the five power leads from the crystal oscillator, remove the mounting screws, loosen the shaft coupling *and* the front panel controls, and pull the assembly out. Then remove all leads and the two mounting screws from the bottom of the BFO can, loosen the shaft coupling and slide it forward, and then pull the can out.

The problem in this unit was that the coil form an the pitch control had broken loose and had rotated until the leads had broken. This was caused by the bottom tab on the spring mounting plate having broken, allowing the coil to be pulled forward until it broke loose from its mount. It is not a good idea to try to solder this spring, as heat will destroy the spring temper. A piece of heavy wire was put in the tab hole and the spring cemented to it, Both coil forms were given a coat of cement around their bases to. insure that neither would break loose again.

Oscillator

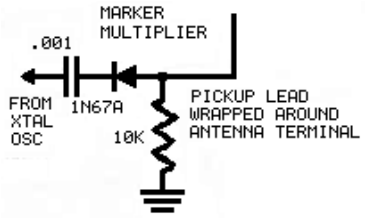

Two objections to the SP-600 are its lack of calibration accuracy and its rate of tuning an the high hf bands. There isn't much that can be done about the calibration accuracy of the receiver itself. but the crystal oscillator used for fixed frequency operation of the receiver can be modified to a secondary frequency standard and band-edge marker. The small changes necessary to accomplish this can be made without having to. remove the subassemblies BUT, if you have to get to the BFO can, you have to take the xtal oscillator out anyway,

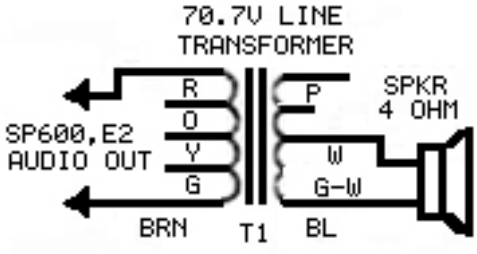

PRIMARY		SECONDARY	
Color	Watts	Color	Tap
Red	8	Purple	16Ω
Orange	4	White	8Ω
Yellow	2	Grn/Wh	4Ω
Green	1		
Brown	Common	Black	Common

Quick and Dirty SP-600 Audio Modifications

by Chuck Rippel, WA4HHG

Changes:

From	To
C141 Ceramic 100pf. ± 10% 500 vdcw	100 pF, polystyrene
C142 Ceramic 100pf. ± 10% 500 vdcw	100 pF, polystyrene
C143 5100pf	0.01 uF, polystyrene
C148 BBOD Paper, 22,000pf. ± 20% 400 vdcw	0.01 uF, polyester
C149 5100pf	10 uF, electrolytic.
C151 Electrolytic, 10uf. 100 vdcw	20-30 uF, electrolytic

Add: a .01 .uF, 630 V mylar capacitor off the bottom of the primary of the output transformer to ground.

Change to metal film types:

R62 100K ohm ± 10%, ½ W

R63 27K ohm ± 10%, ½ W

R64 47K ohm ± 10%, ½ W

R65 22K ohm ± 5%, ½ W

R81 100K ohm ± 10%, ½ W

R82 10K ohm ± 5%, ½ W

R83 1K ohm ± 10%, ½ W

R98 470K ohm ± 10%, ½ W

R99 360 ohm ± 5%, 1 W

Problem Parts

I agree - do not even power it up until you replace at least **C102**. If that one shorts, it takes one or both of the big chokes with it (L51, L52). (Begs the question: why no B + fuse?)

455 KHz IF buffer output check

After receiving a number of requests, herewith the information to determine whether an SP-600 needs its 455 kHz IF output buffer amplifier modified, and if so, how to do it.

First, I may not have made it entirely clear in my previous post what the problem is -- on units that have the problem, it isn't in the IF itself, it is in the buffer stage that drives the 455 kHz output jack on the rear panel. The harmonics of the 455 kHz IF signal that are generated in the overloaded buffer amp are then received by the radio as spurious signals.

There were (at least) three IF output schemes used by Hammarlund. The older ones give very high output (10V or more p-p) with lots of harmonics (clipping on the negative swing), and the newest one gives a very clean 1 or 2V p-p.

In the oldest version the buffer amplifier -- a cathode follower (V16a) -- is fed straight (through C145) from the tied plates of the IF Driver (V11) and BFO Buffer (V12).

The newest version uses an additional connection inside T5 to feed the follower (through C145 and some shielded cable) from the top of the secondary. This has two advantages -- it reduces the feed level by the gain of the IF Driver (V11), and it picks off the IF output feed before the BFO injection. The newest version also uses a tapped coil (L53) as an autoformer on the output (the cathode of V16a feeds the top of L53 through C147, and the IF output jack connects to a tap a ways down on L53).

The middle version has the old-style feed plus L53. I believe this is the most common configuration.

If one has an old-style or middle-style unit I highly recommend changing it, because the distortion in the follower due to the high signal level radiates harmonics of 455 and causes spurious signals.

To change it, one can go into T5 and add the connection for C145. In this case (assuming one already has L53, or adds it) you end up with exactly what Hammarlund built later. Or, you can take the feed without going into T5 by putting C145 on the junction of R55/R56 (the output of T5). I prefer the second method, because it comes out at a bit lower level and does not unbalance the load on the secondary of T5. In either case you need to feed the signal from T5/V11 through shielded cable, grounded at both ends, to the grid of the follower (V16a). C145 goes at the T5/V11 end of the coax to minimize the capacitive loading on T5 (the capacitance of the shielded cable ends up in series with C145). You don't need to try to chase down an appropriate coil to use for L53 -- the follower can just drive the IF output directly. If you want, you can use a resistive voltage divider in place of L53 to lower the signal level some more.

Alternatively, if you don't use the 455 kHz output, you can reduce spurious responses even a bit further by disconnecting C145 from the tied plates of V11 and V12 and connecting it to ground instead.

Best regards, Don

Nuvista plug in for 1st RF amplifier

ENGINEERING TECHNICAL BULLETIN No. 107 Field Handbook No. 90-2807-1 STOCK NUMBER: 5960-HOO-9058 March 1965

Improving the Noise level of the SP-600 Receiver using a Nuvistaplug

Introduction:

The Nuvistaplug, a new device made by Raytronics J has been found to significantly improve the noise figure of the SP.600 when substituted for the first RF amplifier. The purpose of this Technical Bulletin is to explain the advantages of the Nuvistaplug and describe the substitution procedure.

Technical Discussion:

Noise figure (the ratio of noise generated in a practical receiver compared to the noise generated in an "ideal" receiver and expressed (in db) is an important consideration in determining the effectiveness of a receiver. It is generally true that the noise figure of a receiver is established in the first RF stage. This is because the signal and noise present at the first stage are amplified to such a level that the noise contributed by, succeeding stages amounts to very little.

It is therefore desirable to keep the first stage as free from internally generated noise as possible. Pentode tubes have long been used instead of triode tubes as first RF amplifiers (in most receivers) because of their more desirable amplification characteristics. However, the pentode, because of its physical construction, is more noisy than the triode.

By combining the miniature, low noise, high amplification triodes (RCA Nuvistor Type 6DS4) in a cascade arrangement, the Nuvistaplug is able to take advantage of the triode's low noise while retaining, essentially, the desirable amplification characteristics of the pentode it replaces (See Schematic, Figure 1). No circuit changes are necessary when the Nuvistaplug is used, and only slight compensating adjustments are needed in most cases.

Tests show that the noise figure of the SP- 600 can be improved 2 to 6 db or more at most frequencies. It should be pointed out that improving the noise figure by 3 db is equivalent to doubling the signal strength at the transmitting antenna, all other conditions remaining. equal. The Nuvistaplug cannot, of course, improve conditions resulting from noise external to the receiver.

Substitution Procedure:

The procedure for substitution of the Nuvistaplug in the SP-600 is as follows:

1. Connect a resistor (approximately 600n) across the audio output of the SP-60D receiver and connect an audio voltmeter across the resistor.

2. Connect a variable amplitude CW source to the SP- 600 antenna connector. The source frequency should be in the middle of the MOST frequently used range of frequencies -- in other words, if the receiver is used most of the time between 5 and 25 Mc., set the signal generator at about 15 Mc.

3. Replace the VI tube 6BA6 in the first RF amplifier stage with the Nuvistaplug Model 675 (6DS4).

4. Set the MOD-CW switch to CW and the AVC-MANUAL switch to MANUAL; set the RF gain for best sensitivity. Tune the receiver until the CW source is heard.

5. Adjust the CW signal generator amplitude so that the audio tone output is in the noise level of the internally generated white noise of the receiver. The audio gain should be high enough for easy listening, but the tone should be audible, (the noise will be much stronger).

6. Adjust the trimmers for the antenna and the first RF stage while listening to the tone output (See Figure 2). Each time an improvement is made, decrease the amplitude of the CW generator output so that the audio tone is barely heard under the internally generated white noise of the receiver. In most cases the two trimmer capacitors marked "C" need to be readjusted, but the two trimmer inductors marked "LU do not need readjustment.

7. The substitution and realignment are now complete. The manufacturers of the Nuvistaplug point out that two effects may be immediately noticeable after installation of the Nuvistaplug. One Is the lowering of the background noise normally heard through the speaker, and the other is a reduced S-meter reading. Both are due to the fact that the Nuvistaplug frequently has a lower amplification factor than the tube It replaces. However, the important fact remains that the noise is reduced in relation to the signal.

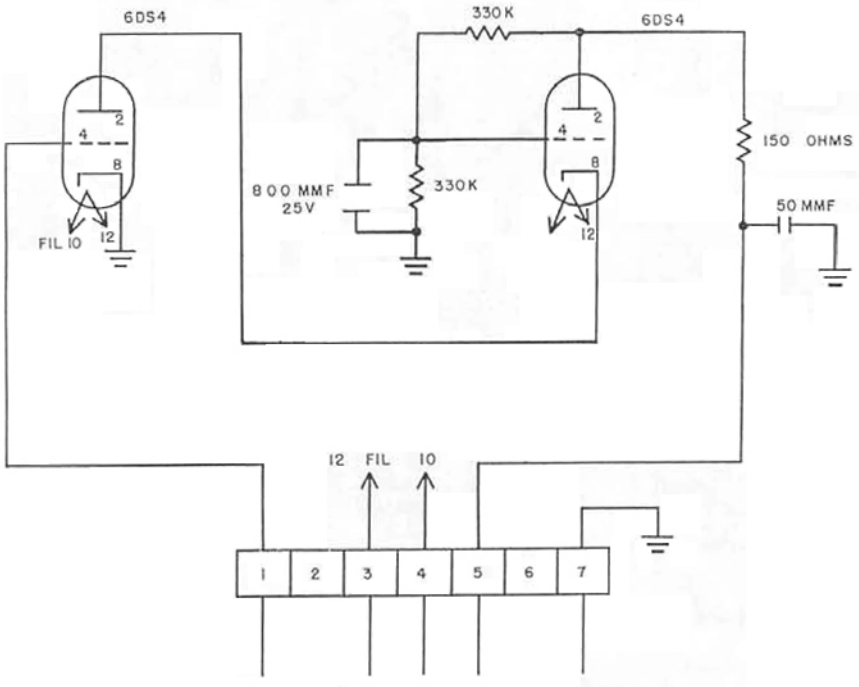

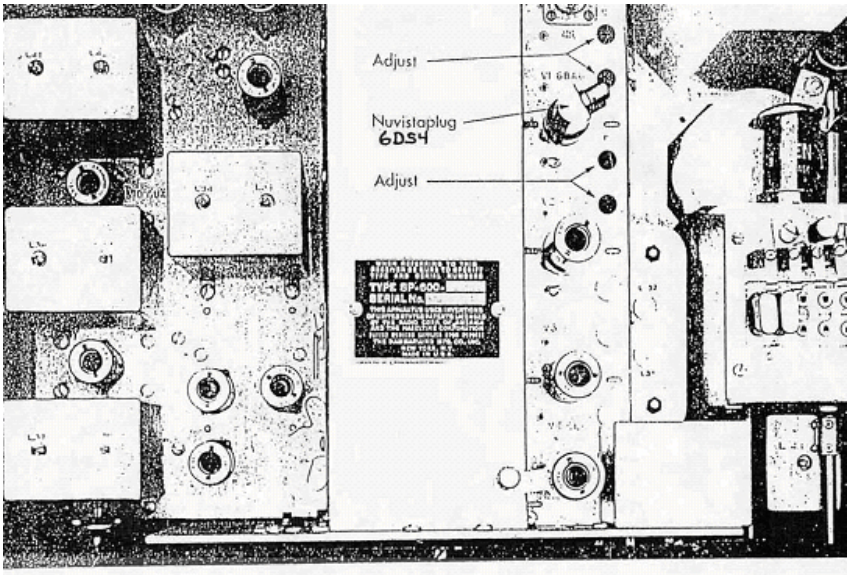

FIGURE: 2 NUVISTAPLUG IN SP-600

Increasing The Lifetime Of V18 (0A2)

Intrigued by the worn-out appearance of V18 in my SP-600-JX I decided to exploit the design margins of this 1950 vintage beauty.

Warning! Do not simply assume the following as suitable without adaptation for your beloved SP-600. Please do your own measurements, calculations and draw your conclusions. Tolerances of component values, esp. 0A2 voltage ratings can be considerable!

Varying various controls (Rf Gain, CW/MOD, Send/Rec) show that the regulated section draws 13.6-14.8mA at 147.3-150.5V. The B+ voltage varied from 230V to 256V, and the current through R85 (2.56k Ohm measured) 32.3-41.2mA accordingly. This results in a current draw for the 0A2 of 18.7-26.4mA which seems unnecessarily high for today's standards of mains supply (urban areas at least).

Assuming a minimum B+ voltage of 215V due to low mains voltage, minimum current for 0A2 of 5mA (according to datasheet), and maximum (to stay on the safe side) regulated voltage of 150V, the maximum value for R85 would be

(215-150)V / (15+5)mA = 3.25kOhm.

Adding a 2W/470 Ohm carbon resistor in series to R85 reduces the current through V18 up to 4.5mA. This may not seem much, but will reduce the dissipated power by approx. 17%. Considering the exponential behavior in speed with increasing temperature of many physical processes (Arrhenius' Hypothesis), a doubled lifetime is quite probable...

As an unexpected plus I found an improvement in voltage regulation: 146.6-149.4V soon after power on, and further decreasing to 146.6-148.6V two hours later. Enjoy!

Gottfried Ira ira@atnet.at

A Simple, Inexpensive High Quality Audio Output Replacement For the SP 600

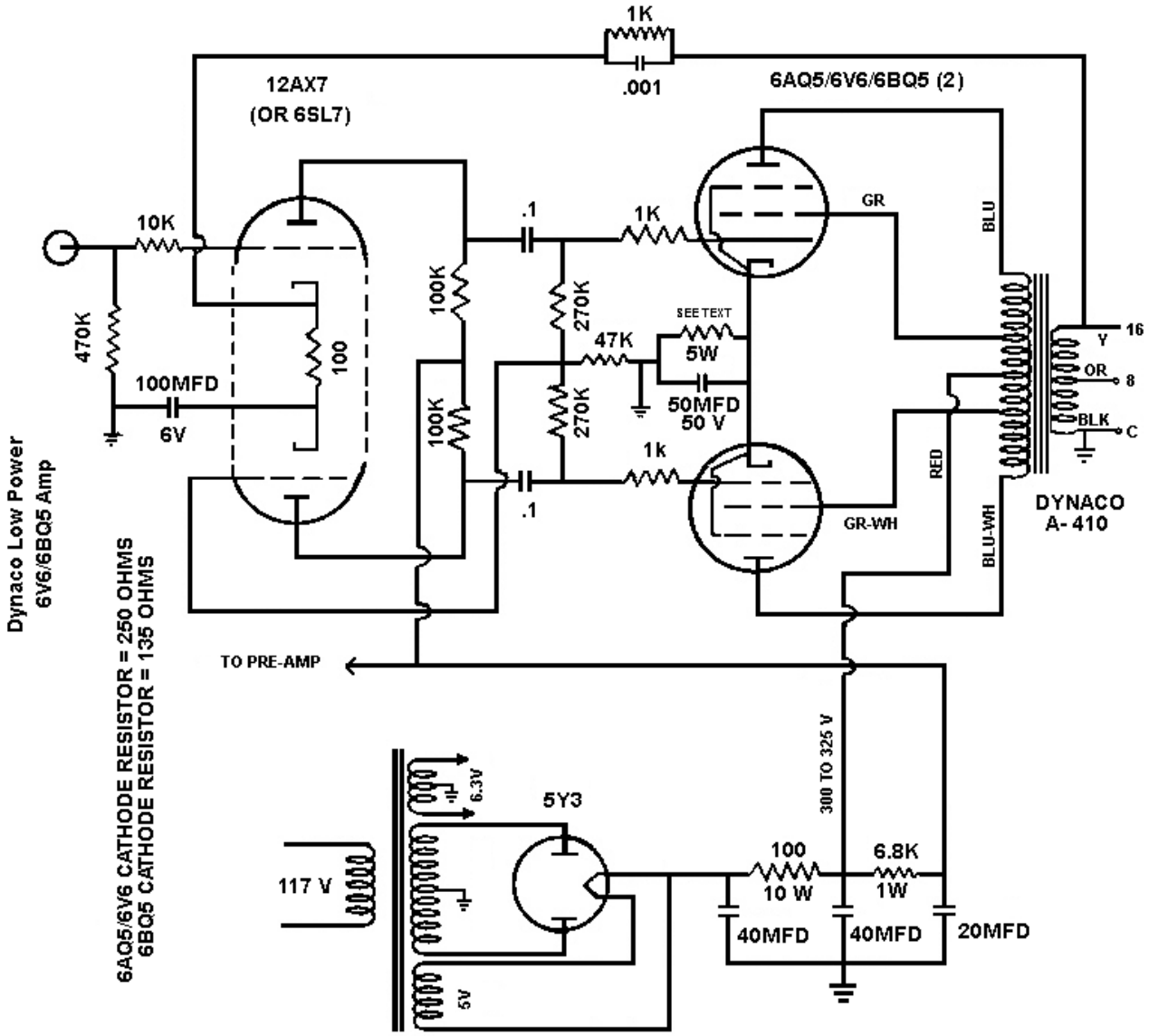

A simple improved audio output circuit. The Hammond output transformer is available at Antique Radio Supply, Triode Electronics as well as others.

On Using The 6EH7

Technical Editor, *QST*

I have just read K3CFA's "Improving Your Receiver with a Frame-Grid R.F. Pentode" (February 1966 *QST).* I tried the EF184/ for that purpose when it appeared in Europe several years ago, but since then have found the EF183/6EH7 a better choice due to its remote cutoff and its lesser" nervousness."

The use of an unbypassed cathode resistor is advantageous as regards the variations in input capacitance and resistance where wide bands are concerned, but is far from improving the stability.

Comparative trials have proved to me that the best stability *is* obtained with the two cathode leads duly bypassed. The diagram is shown in Fig. 1.

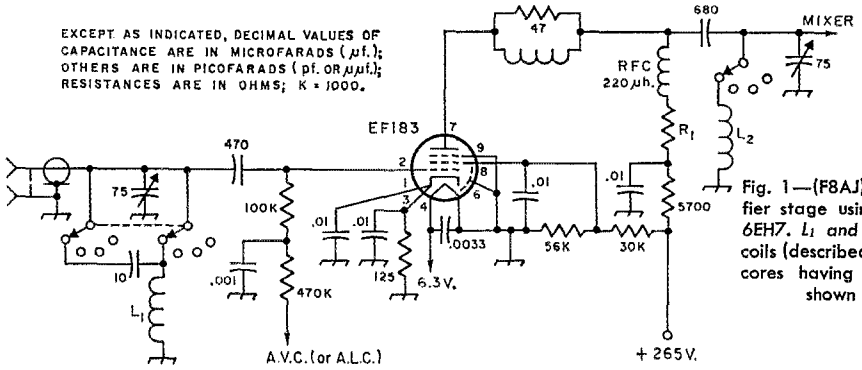

Fig. 1—(F8AJ) The r.f. amplifier stage using the EF183/-6EH7. L_1 and L_2 are toroidal coils (described in letter) using cores having the dimensions shown in Fig. 2.

Careful shielding of the following mixer tube has an important effect on the stability of the r.f. amplifier. A good way to control stability is the use of a swamping resistor, R_1 in series with the anode 220 μh. choke (the idea was borrowed from the Collins KWM-2 designs). A resistor as high as 1K ohms may be required at the beginning to stop oscillation. In proportion as the stability is increased by shielding and bypassing, R, may be reduced in value,

Of course, u. high-transconductance tube deserves high-Q coils. If you have succeeded in putting an EF183/6EH7 in your old receiver without instability, don't have too much pride in your ability until you have a look at the coils.

I am using toroidal coils wound on powdered-iron cores; several cores from the local surplus shop were tried, and best results were obtained with small cores of unknown origin having the dimensions shown in Fig. 2.

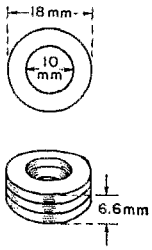

Fig. 2—(F8AJ) Core dimensions. Permeability of the iron measured about 10 as judged by increase in coil inductance compared with air core.

With 49 turns of No. 23 enameled d.e.c. (one layer) the measured inductance is 19.1 μh. The theoretical inductance of the same coil without iron should be about 1.9 μh which indicates a permeability of about 10

Antenna coupling, though apparently unorthodox, proved very convenient with 50-75.ohm lines, The value of the coupling capacitor has to be adjusted and switched with each band. The value in Fig. 1 is for :3.5 Mc.

Aymon Claudet, F8.AJ7 Allie de bois 95 *Orley France.*

Cross-Modulation In Receiver R.F. Pentodes

Technical Editor. *QST.* June 1966.

A number of correspondents have questioned the author about the cross-modulation characteristics of the 6EH7 frame-grid r.f. amplifier which was mentioned in his February 1966 *QST* article.

Cross-modulation occurs when a strong adjacent-channel signal modulates the desired, but relatively weak, signal in the operating channel. This modulation process occurs when the signal amplitudes exceed the linear operating capability of the r.f. amplifier. The remote-out off tube was developed to operate as a linear amplifier with large signal amplitudes. This tube type utilizes a grid structure which will maintain linear control of the plate current when a large grid bias is used (cathode bias plus a.g.c.). The design of the a.g.c. detector circuit is very important for receivers which are to have a minimum of cross-modulation.

The ability of a r.f. amplifier to handle large signal amplitudes without producing cross modulation is synonymous with its ability to have useful transconductance when the grid bias is great enough to handle the large signal amplitude. The term useful transconductance implies that the tube is still functioning as an amplifier - it is not cut off. A cross-modulation figure of merit for r.f. amplifiers could simply be the product of the minimum transconductance and the corresponding large bias voltage as given in the tube data sheets. If a. comparison is to be made among tubes which have different values of maximum transconductance, it will be necessary to specify a standard value for the minimum transconductance. If a small standard value, such as 10 micromhos, is used for the transconductance the best figure of merit is obtained with the tube which has the largest grid bias at that transconductance. The control-grid bias necessary to maintain this minimum g_m may be determined from the operating curves in the data sheets. It might be necessary to extrapolate the curves for any particular tube to determine the standard minimum g_m value. It will also be necessary to specify the circuit configuration for the screen grid, since the voltage on the screen grid competes with the bias on the control grid to maintain the g_m.

The best screen-grid circuit for low cross-modulation performance consists of a series dropping resistor between the screen grid of the r.f. amplifier and the full B+ voltage which is available in the receiver.

Several remote-cutoff pentodes have good reputations for low cross-modulation. The 6SK7 and the 6BA6 are good examples. The 6SK7 data sheets show that this tube will have a g_m of 10 micromhos with a grid bias of - 50 volts and a screen-grid voltage which is derived from a 39K series resistor tied into the plate supply of +250 volts.

The 6BA6 data sheets show that this tube will have a g_m of 10 micromhos with a grid bias of - 55 volts and a 33K screen-grid series resistor. The 6EH7 data sheets show a g_m of 10 micromhos with a grid bias of - 27 volts and a 22K screen-grid dropping resistor. **For the 6EH7 in the author's earlier article, the series screen-grid resistor should be 39K ohms when the B+ is 250 volts. There should *not* be a resistor from screen grid to ground as shown in the article.**

Several other factors must be kept in mind when considering the cross-modulation characteristics of *r.f.* amplifiers: The cathode bypass capacitor must be a bypass of r.f. frequencies but not audio frequencies. The selectivity ahead of the control grid of the r.f. amplifier must be as high as possible; two or three tuned circuits would be a great help. The a.g.c. detector circuit must respond fast enough to work with s.s.b. and c.w. as well as provide sufficient bias to protect the r.f. amplifier from adjacent-channel cross-modulation.

The selectivity ahead of the control grid usually is determined by only one tuned circuit. The Hammarlund PRO-310 general-coverage receiver used two tuned circuits ahead of the r.f. grid with excellent results. Those receivers which have two r.f. amplifiers, such as the NG-183D and the SP600 line, would benefit by cascading the first two tuned circuits and using only one r.f. amplifier.

The fast-attack, slow-release, delayed a.g.c. detector shown in Fig. 1 is recommended for c.w. and s.s.b. as well as a.m. signals. It responds to adjacent-channel signals by virtue of being tied into the primary of the last i.f. amplifier. It provides a constant load on the i.f. transformer since the delay voltage operates on the a.g.c. bus and not on the a.g.c. detector diode.

The small coupling capacitor should be increased until the strongest local a.m. signal is not distorted. If this capacitor is advanced too far, the audio volume level will be reduced.

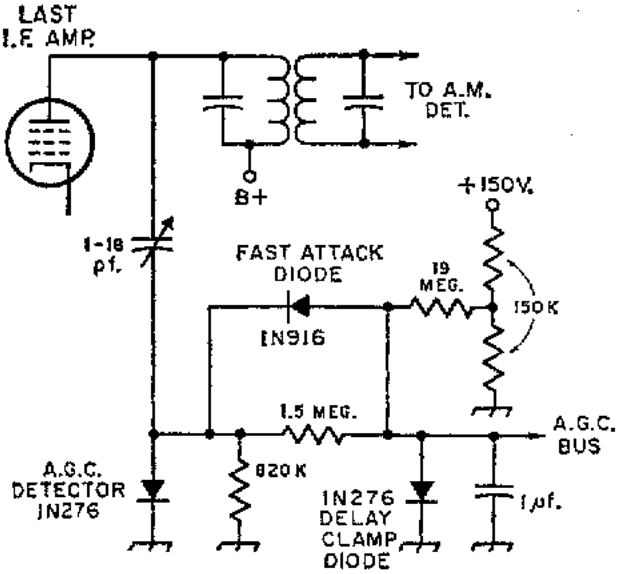

Fig. 1

It should be noted that the remote-cutoff r.f. pentode that has best cross-modulation characteristics does not have the best low-noise, high-sensitivity figure of merit. However, the author finds the 6EH7 to be very adequate on cross-modulation when used with the a.g.c. detector in Fig. 1 and a series screen-grid resistor. The 6EH7 is superior for high sensitivity and low noise, as discussed in the earlier article.

Joel Balough, K3CFA, P.O. Box 327, Lemont PN 16851.

June 1966

Improving Your Receiver With Frame-Grid R.F. Pentodes

BY JOEL BALOGH W3CFA *QST* February 1966

The many requests for information on the use of the EF 183/6EH7 variable-mu frame-grid pentode mentioned by the author as an r.f. amplifier in an earlier *QST* article[1] have forced the following conclusion: there still exists that breed of radio amateur who would rather rebuild his present equipment than trade it in on a new model to obtain the best possible performance. This article is dedicated to that breed.

A knowledgeable reader of this article may correctly point out that atmospheric and manmade noise levels, will normally exceed the low noise levels in the author's receivers. But that is how it should bet A quick method of checking receiver performance is to' disconnect the antenna and note what happens to the audio-output noise level. It should drop when the r.f. gain is wide open and the receiver is set at its upper frequency limit. It should also be possible to peak up the antenna noise with the antenna trimmer control. If these two checks are marginal, then pull out the r.f. amplifier tube to cause a drop in noise. If the noise stilt doesn't drop you know that the mixer or converter stage is contributing more noise than the r.f. ,amplifier or the atmospheric and man-made noise, levels coming in from the antenna. Improving the receiver is now up to you.

Many articles, on receiver improvements have appeared in the amateur magazines and sections in the ARRL *Handbook* on this subject, so no attempt will be made to give credit to all reference material used in this article.

Some credit is due the old HQ-l20X receiver which has served as a guinea pig during the past decade of rebuilding and experimentation. This particular receiver (a Navy version of the HQ-l20X went through the Second World War and was salvaged from a junk heap around 1951. The first attempts to improve it, were started when W1NXY[2] discussed some changes in the postwar HQ-120 receiver.

This consisted of changing the mixer stage to obtain lower noise operation. Revisions in the r.f. stage were Already underway when W5UZ[3] discussed this and other areas of the same receiver. Not all of the work through the years on the guinea pig resulted in improvements -- the cathode-coupled triodes and cascaded triodes were tried out as r.f. amplifiers were rejected for reasons discussed later on.

A 6BZ6 pentode was used for several years as a r.f.. stage, but it was unstable above 20 Mc. The present 6EH7 has been used as an amplifier in the guinea pig since early 1962, and it will continue in that role until a better tube is invented. This article not only discusses how to use the 6EH7 to obtain better performance, but it also discusses the principles used by the author to evaluate new tubes as they are introduced on the market.

The following list presents most of the factors which should be kept in mind when planning receiver front-end improvements:

1) R.f. stages which were originally designed to operate with remote-cutoff pentodes should be rebuilt with better remote-cutoff pentodes and not sharp-cutoff pentodes or any triodes.

2) The transconductance of the new pentode should be higher than that of the old pentode.

3) The cathode current of the new tube should not exceed 20 milli-amperes,

4) The grid-to-plate capacitance of the new pentode should be equal to, or less than, that of the old pentode.

5) The sum of the pentode's shotnoise and partition noise should be as small as possible.

6) The dynamic plate resistance of the new pentode should not be less than .5 megohm.

7) The cost and availability of the new tube must be such that the average receiver can readily be modified.

8) The heater voltage, must match that of the old tube.

The factors given above are not all independent, so a compromise must usually be reached when considering an assortment of tubes. Various methods of weighing the importance of these factors are discussed in the following sections of this article.

Pentode versus Triode

A number of articles have appeared on the subject of receiver improvement using triodes to replace pentodes, but it is this author's experience and opinion that the resulting loss in r.f. gain and selectivity do not justify the reduction in tube noise. The loss in gain and r.f. selectivity is a result of the low dynamic plate resistance of the triode which swamps the Q of the resonate r.f. plate circuit. These plate circuits were originally designed to yield the desired Q when operated with the high plate resistance of pentodes. The dynamic plate resistance is parallel with the plate circuit when considering the equivalent circuit of the tube, plus the plate circuit. For this reason a plate resistance which is below .5 megohm is not desirable.

High. Transconductance

If there had to be just one criterion for eva1uating receiver pentodes, it would be for higher transconductance. This primary characteristic determines the obtainable gain as well as the shot noise and partition noise. But in any practical application, higher gain can be utilized only if the stage is stable, and this is primarily a function of the tube's grid-to-plate capacitance. Thus, higher transconductance can be handled only if the C_{gp} is about equal to that of the old tube. Also, in practical applications, higher gain presupposes the end result of detecting weaker r.f. signals, but the minimum detectable signal is determined by the combined atmosphere, man-made and tube noise present at the front end of the receiver. We cannot do anything in the receiver to change the atmospheric and man-made noise levels. The tube noise of a pentode is usually considered to be the sum of the shot noise find the partition noise. The shot noise is reduced by higher values of transconductance. The partition noise is reduced by a, combination of higher transconductance and a smaller ratio of screen current. to cathode current. Some sharp-cutoff pentodes are on the market (the 7788 is one example) which yield low shot and partition noise by having both high transconductance and a low ratio of screen-to-cathode currents.

But such tubes, even if a remote-cutoff version were available, would not be usable for improving a communications receiver because the total cathode current (45 ma. for the 7788) might cause heating in the Litz wire of the coils in the receiver. For this reason, an upper limit on the total cathode current was set at 20 ma. The price of the 7788 would also be a disadvantage for this particular tube.

Evaluating New Tubes

The data on the new tubes which are introduced on the market, seldom include specific mention of shot and partition noise, so recourse must be taken to compute this information from the data which are furnished. Shot and partition noise is usually spoken of in terms of the equivalent resistors which would give rise to the observed noise voltages. This analogy arises from the observable noise voltage which is present across the terminals of any resistor due to the random motion of the electrons which are present in the resistance material. This has the classical name of Johnson Noise. The equations which are in use for computing the values of these equivalent resistors are usually approximations instead of precise equations. This makes the computation easier. But it also result in a variety of approximation equations. The author here prefers to use two different approximations, one from the *MIT* reference [4] and the other from the *Radiotron* reference[5]. The results of both equations are then used to establish a ball-park figure for the equivalent noise resistance of the tube in question. The equations appear below:

$$\text{(MIT) } R_{eq} = R_{SHOT} + R_{PARTITION} = \frac{2.5}{gm} + \frac{20 I_{SG}}{g_m \; I_K} \text{ ohms}$$

$$\text{(Radiotron) } R_{eq} = \frac{I_p}{I_K} \; \frac{2.5}{gm} + \quad \text{ohms}$$

where gm = transconductance in mhos
I_K = cathode current *in* a111peres
I_p = plate current in amperes
I_{sg} = screen grid current in amperes

A selection of both sharp and remote-cutoff pentodes is listed in Table 1 to show the results of the two equations. Keep in mind that a high gain (high- Transconductance) pentode is desired which has the lowest possible equivalent noise resistance. The other columns in Table 1 are discussed elsewhere. The information on the sharp-cutoff tubes is provided as reference material for use when selecting a low-noise mixer stage. The reader can observe that the 6EH7 has the lowest computed equivalent noise resistance of the remote-cutoff pentodes listed in Table 1.

Ratio of *Transconductance -to-C_{cg}*

As mentioned previously, a high-transconductance pentode will have merit as a r.f. amplifier only if the grid-to-plate capacitance is low enough to give stable operation. The 6EH7 does not have the lowest. C_{cgs}, as shown in Table 1, but it does have the highest g_m. The obvious way to get a relative comparison between r.f. pentodes, is to look at their ratios of g_m/C_{gp}. This is tabulated in one of the columns of Table 1. Again, the 6EH7 shows up as the best tube when the criterion is for the highest *gm -to-* C_{gp} ratio.

Ratio of gm/C_{gp}-to-R_{eq}

For the case where a new tube may not have the lowest R_{eq}. but does show the highest gm/C_{gp} ratio (or vice versa), a relative comparison based on the ratio of gm/C_{gp}-to-R_{eq}. would be helpful. This latter ratio is tabulated in the last column of Table 1. The lowest value of the two approximated R_{eq}'s was used for computing this ratio. Again, the 6EH7 is the best available tube for use as a gain-controlled r.f. amplifier when the criterion is for the highest gm/C_{gp}-to-R_{eq} ratio.

Selecting a *Mixer Tube*

With a few exceptions, most of the comments on selecting an d. tube apply to the task of selecting a mixer tube. Since the plate and grid circuits are not tuned to the same frequency, feedback by way of C_{gp} should not produce instability. Some mixers are desired which have a broad-band response (such as in converters), so a lower value of dynamic plate resistance can be tolerated. This lower value cannot be tolerated, though, if the mixer is in a communications type receiver where high *Q* i.f. transformers follow the mixer stage. The 6EJ7 sharp-cutoff pentode (Table 1) is a good candidate for mixer service. The author uses four of them in this role, in four different receiving systems. The 6EJ7s have also been put to use as Lf. amplifier's in an f.m. tuner and a pre-i.f. noise-silencer.

A R.F. Amplifier Circuit

The 6EH7 has been used as a r.f. amplifier by the author in the HQ-120X receiver as well as an Eddystone 888A ham-band receiver and an RME DB-20 pre-selector.

The circuit shown in Fig. 1 represents an r.f. amplifier which can be adapted for use in any receiver covering all, or parts, of the 0.55-Mc. to 30-Mc. range.

The unspecified plate and screen-dropping resistors must be selected on the basis of the available supply voltages and the required plate and screen circuit currents.

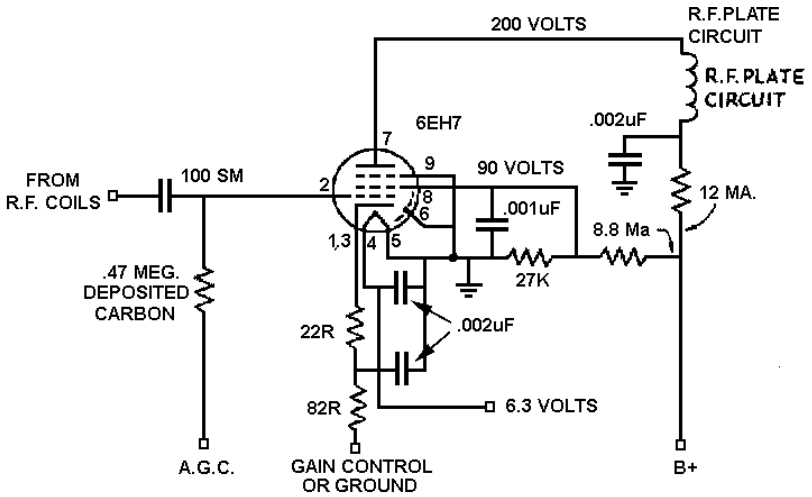

For the 6EH7 in the author's earlier article, the series screen-grid resistor should be 39K ohms when the B+ is 250 volts. There should *not* be a resistor from screen grid to ground as shown in the article. (QST June '66)

Please note the specified values of cathode and screen bypass capacitors. These values were selected to form series-resonant circuits where the inductance is in the form of the capacitor leads. Do not use larger values of bypass capacitors unless the amplifier is for use only on lower frequencies. A 0.01mfd bypass can be used at 7 Mc. and lower, while a 0.1 mfd bypass can be used at 2-Mc. and lower. The unbypassed 22-ohm cathode resistor is used to compensate for variations in input capacitance and resistance which otherwise would occur when cathode or grid voltages are changed. Pin 6 is used to ground the tube's internal shield. An external shield is also recommended. The heat-dissipating style such as IERC's TR.-6-6020B will assure longer tube life. Something not shown in Fig. 1, but which is always used by the author, is a shield partition which straddles the tube socket. A piece of 1/32-inch sheet brass, which is about 3 inches square, is installed to pass between Pins 1 and 9 and between Pins 5 and 6. Pins 5, 6, and 9, the center post of the socket, and the grounded ends of the bypass capacitors, are then soldered to this brass plate.

Of course, the r.f. circuits will have to be realigned after the new tube is installed.

A Mixer Circuit Using the 6EJ7 Pentode

The mixer circuit which was used in the HQ-120X appears in Fig. 2. A separate local oscillator using a 6AK5 was installed on a sub-chassis underneath the main chassis. The 9-pin socket for the 6EJ7 was mounted on an adaptor plate which replaced the old 8-pin socket. The variable cathode resistor and the trimmer capacitor between the oscillator plate and the mixer grid are adjusted so that the mixer has high gain while remaining stable over the entire frequency range. Too much oscillator injection or too little mixer bias will produce "birdies." A triode local oscillator should *not* be used if pulling of the oscillator frequency is to be avoided on the higher frequency bands.

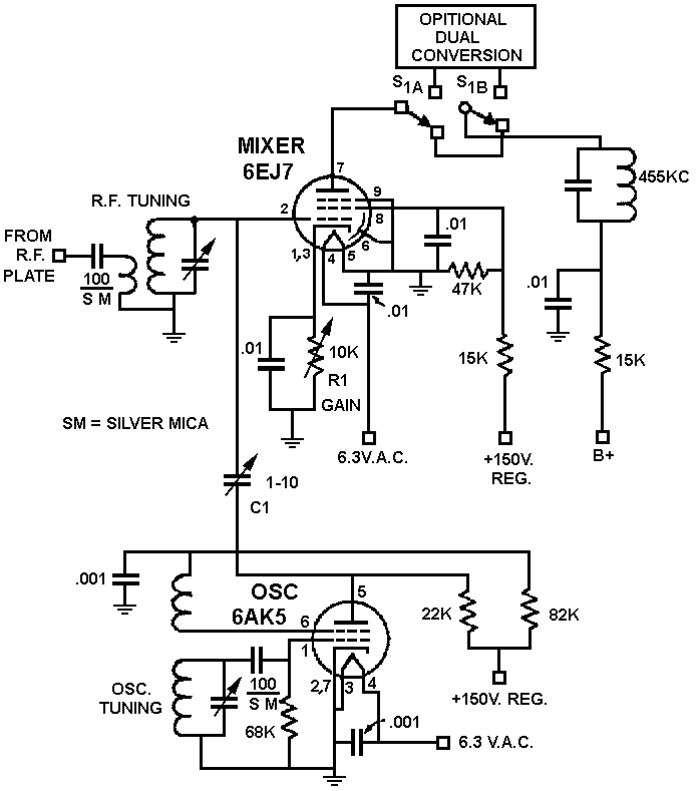

***This is the mixer circuit John Leary used in his SP 600's for the 2nd mixer with the exception of making C_1 a fixed value of 10pf*. (*He didn't use the 6AK5 circuit* .)**

Note: On some receivers John used a variable pot that could be adjusted from the from panel. It is unclear whether an adjustable pot was located by the mixer tube and adjusted for optimal performance as stated in this article.

Dual Conversion for the HQ-120X Receiver

The image rejection of this receiver was not very good when operating above 10 Mc. because of its relatively low i.f. of 455 ke. A subchassis Was installed under the main chassis of the HQ-120X which provided dual-conversion capabilities above 10 Me. A three pole, double throw wafer switch was mounted behind the front panel with its shaft coming out just to the left of the sensitivity control and below the send-receive switch.

The schematic of this dual-conversion unit is shown in Fig. 3. It uses a 6U8A triode-pentode, with the triode serving as a crystal-controlled oscillator and the pentode as the mixer. The frequency of this crystal can be between 1855 kc. and 2055 kc. The 1965-kc. unit was obtained from one of the surplus crystal companies. The cathode resistor of the pentode might have to be adjusted a little to obtain stable mixer operation. Of course, the first local-oscillator circuits had to be realigned when the dual-conversion feature was incorporated in the receiver. The fixed-padder capacitors which were in series with the oscillator ooi1s, for the two bands above 10 Mc., were replaced with Arco 307, 350-1180 pf., variable padder capacitors. A signal generator which provided marker signals every 1 Mc., as well as a variable-frequency signal, was useful for the realignment work.

Changing the HQ-120X over to dual conversion entailed a lot of work, but the elimination of the image problem was well worth it. The elimination of the images was especially rewarding when using this receiver as a tunable i.f. in the 14-Mc. to 18-Me. range, which is the output frequency of the 2-meter converter used by the author.

The noise present at the image frequency tended to degrade the performance of the converter by approximately 3 db. when the 455-kc. i.f. was used at 14 Mc.

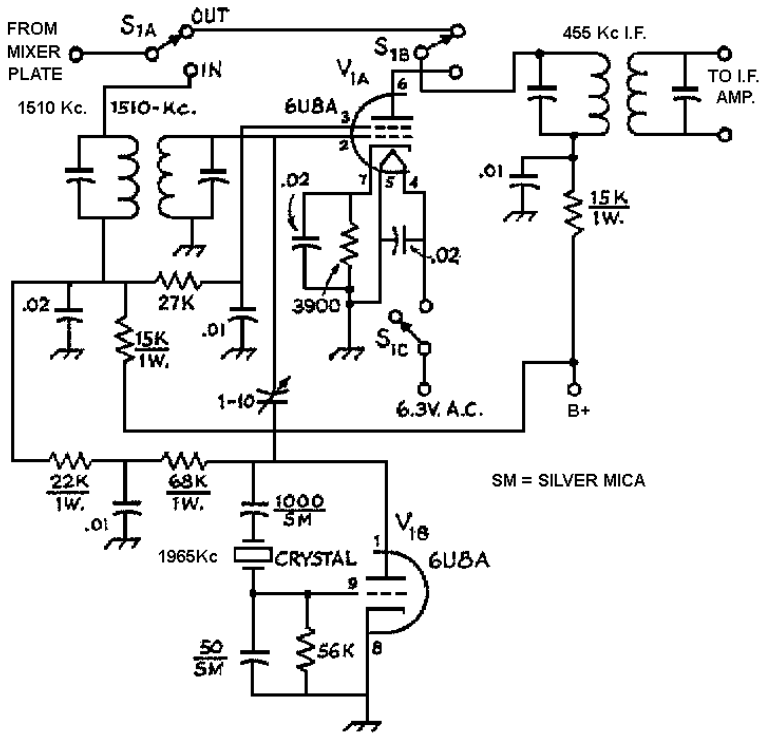

fig. 3- (Right) Circuit diagram of the dual-conversion unit for the HQ-120X receiver.

Actual Results

Some reasonable questions come up every time the subject of receiver improvements is discussed. How can I check my present receiver's performance? What improvements can be obtained with these frame-grid tubes? The first question was answered in the introduction to this article.

The noise figure which can be expected with the 6EHF at 30 Me. is approximately 5 db. The improved HQ-120X was able to copy a c.w. 0.03-microvolt signal from a 50-ohm calibrated signal generator at 30 Me. *before* the dual conversion was installed, This 0.03 microvolt level was where the c.w. signal dropped into the noise.

The narrow-band crystal filter was in use during the c.w. test. An a.m. signal, modulated 40 percent with 400 c.p.s., dropped into the noise at .06 microvolts without a crystal filter. The S-meter circuit in the receiver was rebuilt and calibrated for use at 15 Me. with the 2-meter converter.

Table II shows the a.m. test-signal levels present at the antenna jack of the HQ120X from a 50-ohm generator operating at 15 Mc., which produced the various S-meter readings. These measurements were obtained *before* the dual conversion was installed.

The Eddystone 888A ham-band receiver, modified by the author, was checked with the calibrated signal generator on c.w. at 29.5 Mc. The signal dropped into the noise at 0.01 microvolt. The Eddystone has dual conversion, a l-kc. i.f. bandwidth and an 80-e.p.s. audio filter for use on c.w.

Table II - S-Meter Readings at 15 Mc.

S-Units	Input μv. 50-Ohm Source.
9	50
8	25
7	10
6	3.5
5	1.2
4	0.5
3	0.2
2	0.1
1.5	0.05
1	noise

Table I - Tabulation of Pentode Tube Data.

Tube Type	Plate Voltage	Screen Voltage	Cathode Current ma.	Plate Current ma.	Screen Current ma.	g_m µmhos	C_{gp} pf.	R_p Meg-Ohms	Equivalent Noise Resistance MIT ohms	Equivalent Noise Resistance Radio-tron ohms	Ratio g_m/C_{gp} 10^{12}	g_m/C_{gp} 10^9 R_{eq}
6SG7	250	100	11.0	9.0	2.0	1,850	.004	1	3320	10,680	.463	.139
6SK7	250	100	11.8	9.2	2.5	2,000	.003	0.8	3450	11,100	.666	.139
6BJ6	250	100	12.5	9.2	3.4	4,400	.0035	1.3	2160	4,260	1.03	.477
6SG7	250	150	12.6	9.2	3.4	4,000	.003	1	1980	3,100	1.33	.674
6BA6	250	100	15.2	11.0	4.2	4,400	.0035	1	1820	3,520	1.25	.685
6DC6	200	150	12.0	9.0	3.0	5,500	.02	0.5	1370	1,830	.275	.202
6BZ6	125	125	17.6	14.0	3.6	8,000	.015	0.26	822	1,140	.533	.648
6JH6	125	125	17.6	14.0	3.6	8,000	.015	0.26	822	1,140	.533	.648
6HR6	200	115	17.5	13.2	4.3	8,500	.006	0.5	875	1,400	1.42	1.62
6BH6	250	150	10.3	7.4	2.9	4,600	.0035	1.4	1770	2,330	1.31	.739
6SH7	250	150	14.9	10.8	4.1	4,600	.003	0.9	1630	2,850	1.63	1.00
6AK5	180	120	10.1	7.7	2.4	5,100	.02	0.5	1420	1,880	.255	.180
6AU6	250	150	14.9	10.6	4.3	6,200	.0035	1	1590	2,660	1.48	.930
6BC5	250	150	9.8	7.5	2.1	6,700	.02	0.8	1210	1,360	.285	.236
6CB6A	125	125	18.7	13.0	3.7	8,000	.015	0.28	867	1,150	.533	.616
6DE6	125	125	19.7	15.5	4.2	8,000	.015	0.25	847	1,280	.320	.378
6AC7	300	150	12.5	10.0	2.5	9,000	.015	1.0	722	720	.600	.838
6HA6	300	150	12.5	10.0	2.5	9,000	.03	0.5	722	716	.300	.419
6HS6	150	75	11.6	8.8	2.8	9,500	.006	0.5	769	668	1.58	2.37
6FS5	275	135	9.2	9.0	0.17	10,000	.03	0.24	287	278	.333	1.20
6EW6	125	125	14.2	11.0	3.2	14,000	.04	0.2	503	392	.350	.893
6E.J7	200	200	14.1	10.0	4.1	15,600	.0055	0.51	582	352	2.84	8.07
6688	180	150	14.4	11.5	2.9	15,900	.018	0.09	410	308	.884	2.87
7788	185	165	40.0	35.0	5.0	50,000	.035	---	100	79	1.43	18.1

Tubes listed above in the top section are remote or semi-remote cutoff. The tubes listed in the bottom section are sharp cut-off types.

Note: It may be possible to use a 7788 in the RF section as the plate voltages to the RF amplifier tubes use a shunt feed. Also check out the 6EH7 as a remote cut off tube for front end use.

JX-17 IF Gain Mod

TECHNICAL ORDER WASHINGTON 3IRZ-4-I8-50Z I MAY 1956

MODIFICATION OF HAMMARLUND COMMUNICATION RECEIVER MODEL SP-600-JX-17 TO INCREASE OPERATIONAL EFFICIENCY

To increase the operational efficiency of Hammarlund Communication Receiver, ModeISP-600-JX-17, by:

a. Addition of an “IF Gain" label and card holder to the front panel to provide operational and maintenance information.

b. Addition of an IF Gain control for thresh-hold adjustment of overall receiver gain to provide necessary balance in receiver gain for use in diversity service.

£.. Addition of a series resistor to reduce voltage to dial lamps, thus increasing dial lamp life.

a. Turn off all power to the receiver.

b... Addition of IF Gain label and card-holder to the front panel (see Figure 1).

(1) Remove bottom plates from receiver and tuning unit.

(2) Remove dial lock knob and assembly, retaining the knob. washer for later use with new IF Gain control nut and lock.

Support the dial lock assembly while removing panel nut and lockwasher to avoid damage to the dial needle.

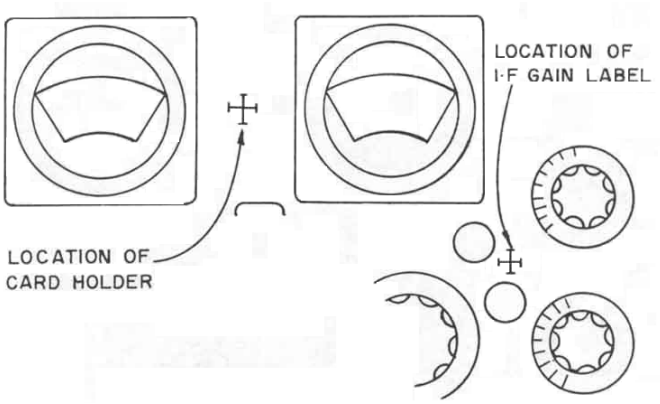

(3) Place the receiver on its back with the front panel up, in horizontal position.

(4) Clean the panel surfaces between dial escutcheons and around lettering of dial tuning lock, using an approved cleaning solvent such as trichlorethylene

(5) Apply a coating of toluol, supplied in capsule form in the kit, to rear surfaces of IF Gain label and card holder.

(6) Wait about 30 seconds or until surfaces are tacky, then place the IF Gain label centered over the dial tuning lock lettering, and the card holder centered between the dial escutcheons. Apply even pressure to both labels and allow the adhesive material to harden.

c. Installation of IF Gain control.

(1) With receiver's bottom up; feed free end of the new IF Gain control cable through the grommet in front skirt of chassis and install the IF Gain control on the front panel, using the hole from which tuning lock was removed.

(2) With the terminals of the new IF Gain control facing upward. toward bottom of receiver, secure the control using the lockwasher and nut previously removed from the tuning lock.

(3) Install tuning lock knob on the IF Gain control shaft.

(4) Dress the new cable. along with the receiver cable, towards the side of the tuning unit and then upward and through the slot at the front bottom corner of the tuning unit shield.

(5) Dress the cable across the inside front of the tuning unit shield and through the slot in the opposite corner of the shield.'

(6) Leave just enough slack in cable inside the tuning unit shield to clear below the screw head in the center of the shield's front.

(7) Dress cable downward along front corner of tuning unit shield; then around the front of chassis with the receiver cable and then along the side of the chassis until it is opposite to the front of socket for tube V9.

(8) Replace tuning unit bottom Cover.

(9) Unsolder and remove wire connections between pin 7 and center shield of socket for tube V9 and the chassis.

Connect pin Z and center shield of socket for tube V9 to the rear ground lug of this socket (see Figure 2).

(11) Connect the center conductor of new cable together with one lead of new 0.01 mfd capacitor to pin 7 of socket for tube V9 (see Figure 2)

(12) Connect other lead of the new capacitor and cable ground lug of the socket for tube V9 (see Figure 2). shield to the front

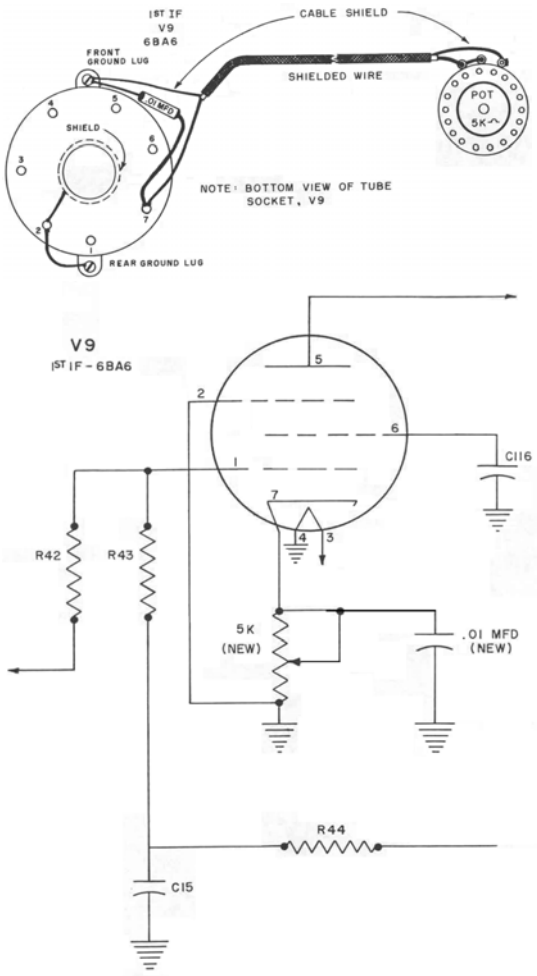

Collins Disc-Wire Mechanical Filters., Parts 1,2 and 3
Dallas Lankford [HSN Issue # 15, pgs 2-8]

Collins disc-wire mechanical filters for communications purposes are available in the frequency range of 60 - 500 kHz with bandwidths of 0.2 to 16 kHz. Most of those filters operate at or near 455 kHz. The filters come in three varieties: symmetric, USB, and LSB. The vast majority of such filters which are generally available on the used and surplus market are symmetric filters. For tube type applications, source and load terminations of 100 K ohms or more (≥100 K) are required. So our discussions will be restricted to disc-wire, symmetric, 455 kHz center frequency, ≥100 K termination, Collins mechanical filters. Listed below are some common mechanical filters of those kinds, and their specifications.

TYPE	PART NUMBER	PASS BAND (kHz/dB)	STOP BAND (kHz/db)	RES.CAP. (pf)
F455-N-20	526-9163-002	2.0/6	4.0/60	110
F455-N-40	526-9160-002	4.0/6	8.0/60	110
F455-N-80	526-9161-002	8.0/6	16.0/60	110
F455-N-160	526-9162-002	16.0/6	32.0/60	80
F455-FA-05	526-9494-000	0.5/6	3.0/60	130
F455-FA-09	526-9446-000	0.9/6	4.0/60	130
F455-FA-15	526-9495-000	1.5/6	3.5/60	130
F455-FA-21	526-9427-000	2.1/6	5.3/60	130
F455-FA-27	526-9500-000	2.9/6	6.2/60	130
F455-FA-31	526-9496-000	3.1/6	6.5/60	130
F455-FA-40	526-9497-000	4.0/6	8.5/60	130
F455-FA-60	526-9498-000	6.0/6	12.6/60	130
F455-FC-60	526-9522-001	6.0/3.5	25.0/60	130
F455-Y-05	526-9521-010	0.5/6	3.0/60	130
F455-Y-21	526-9337-000	2.1/6	5.3/60	130
F455-Y-31	526-9338-000	3.1/6	6.5/60	130
F455-Y-40	526-9339-000	4.0/6	8.5/60	130
F455-Y-60	526-9340-000	6.0/6	12.6/60	130
F455-Y-80	526-9341-000	8.0/6	18.5/60	130
F455-Y-160	526-9343-000	16.0/6	27.5/60	130

N filters are used in R-390A's, and are perhaps the most common on the used and surplus market. The last three digits of the part numbers of the N filters may be different from the numbers given above. Part numbers, pass bands, stop bands, and resonating capacitors values for the N filters are inferred from measurements, the 1970 NAVSHIPS manual drawings and parts list, and individual filters markings. N filters have a metal case with flange. mount. Measured skirt attenuation is typically well in excess of 100 dB.

FA filters originated in the early 1960's as an "inexpensive" ham and experimenter filter, although some now sell in the $200 range for a new filter. FA filters have a plastic case, and it is important that the two ground lugs have a common signal ground. Measured skirt attenuation is typically well in excess of 100 dB.

Y filters are seldom seen on the used and surplus market, and are included mainly for completeness. The Y case is a metal cylinder, similar to the N case, but slightly smaller, and with no flange.

Data for the FA and Y filters above is taken from various Collins publications. There is also a series of FB filters which are identical to the FA filters above, except that the FB filters have measured pass band and stop band values marked on each filter. Pass band and stop band values may vary from filter to filter.

The FA and Y values above are minimum pass band and maximum stop band values respectively. For example, an individual F455-FA-21 filter might typically have a 2.4/6 pass band and 4.6/60 stop band. Collins mechanical filters are very reliable, with a mean time before failure on the order of 2000 years based on field measurements. Insertion loss for the FA and Y filters is specified as 25 and 20 dB maximum respectively, but are typically much less, about 8 dB. I have no information about N filter insertion loss, but it is probably similar to FA and Y filter insertion loss.

There are several ways to improve the less expensive models. Since all have a 455 kHz IF at some point, all can be fitted with a 455 kHz mechanical filter. Chuck Hutton (DX News IDXD Editor) has modified his HQ-120X with two Collins 2.1 kHz mechanical filters and reports that it outperforms his R- 390A. Mechanical filters are not cheap ($25-$150 or more), but installing one or two mechanical filters in most of the Hammarlund receivers is probably the easiest way to get a state of the art receiver for the BCB or tropical bands. The center frequency of Hammarlund crystal filters is generally not exactly 455 kHz, but typically 2 to 4 kHz lower. This means that if you add a mechanical filter to one of the Hammarlund receivers with a crystal filter, then the crystal filter may not be used unless you change the crystal. My article "180 + Collins F455FA40 mechanical filter ~ super l80" describes one method of adding a mechanical filter to the HQ-180(A). It should still be available from the National Radio Club through their reprints service.

Recall that in Part 2 I discussed the two general kinds of mechanical filter circuits which are used when AVC is needed at the output, namely series and parallel AVC. In Part 3, I will present some applications of those two general approaches, using suggested before and after circuits for some common tube type communications receivers. Let me begin with a description of an HQ-180(A) mod which I have done to my own '180.

The format I will use to display schematics is illustrated in **Figure 1**, a small section of a late model HQ-180A schematic. The figure labels are not (usually) the same as '180 labels, which are listed in the column under "HQ-180(A)." To avoid ambiguity and confusion, when I refer to the labels from a receiver schematic I will enclose them in parentheses. For example, C3 in **Figure 1** is (C134) on a '180 schematic. I have also deleted some details from the original schematics to conserve space and simplify schematics. For example, the original '180 schematic indicated that a shielded cable connected the junction of C2, L2, and R1 to C3. However, in all cases there should be (to R9) enough details for you to associate the figures from this article with actual receiver schematics. Sometimes additional information will be given in the text.

For example, **Figure 1** contains the caption "(P: see text)" beside one of the arrowheads. It would have been awkward or unsightly to attach the AVC label "(to junction of R14, R15, R18, and C20)" at that point, and it is much simpler to refer to that point as point P. The parallel LC tuned circuits L1-CI and L2-C2 are both part of transformer T1, and I have omitted some of the shielding (dashed line) which should entirely enclose them.

The question marks beside L1and L2 in column 2 of **Figure 1** indicate that the inductances of those two inductors is not given on the '180 schematic. Also, only late model '180's have CS (C158) and very early model '180's do not have R1 (R10?). The voltage ratings of components from a receiver schematic are not given because you can determine them from the original schematic or parts list. Voltage ratings of added components in modifications, such as in **Figure 2**, are generally given, except for half watt resistors whose ratings are omitted.

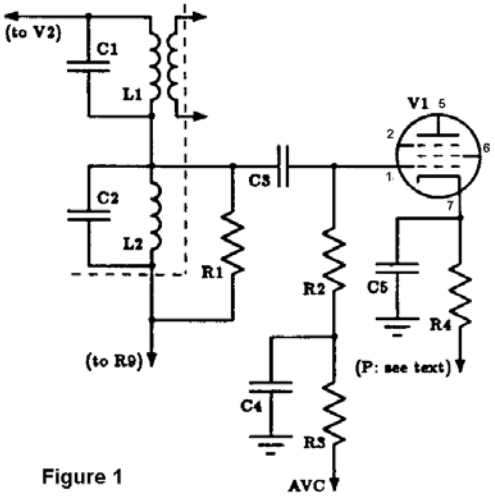

Figure 1

The mechanical filter type (second column entry beside MF 1) and resonating capacitors (second column entry beside C3 and C4) are not specified. Any FA, FB, or N series mechanical filter is suitable for any of these modifications. The values of the resonating capacitors Ct for each filter have already been given in the first table.

If you have an older '180 which does not have R1 (R107), it is not necessary to add a 100 K resistor. I removed R1 (R10?) from my '180 to determine if there was any noticeable difference, but could detect none.

Figure 1		HQ-180(A)
C1	22	-
C2	90	-
C3	2	C134
C4	0.01	C130
C5	0.01	C158
L1	?	-
L2	?	-
R1	100 K	R107
R2	22 K	R101
R3	100 K	R36
R4	2200	R99
V1	6BA6	V17

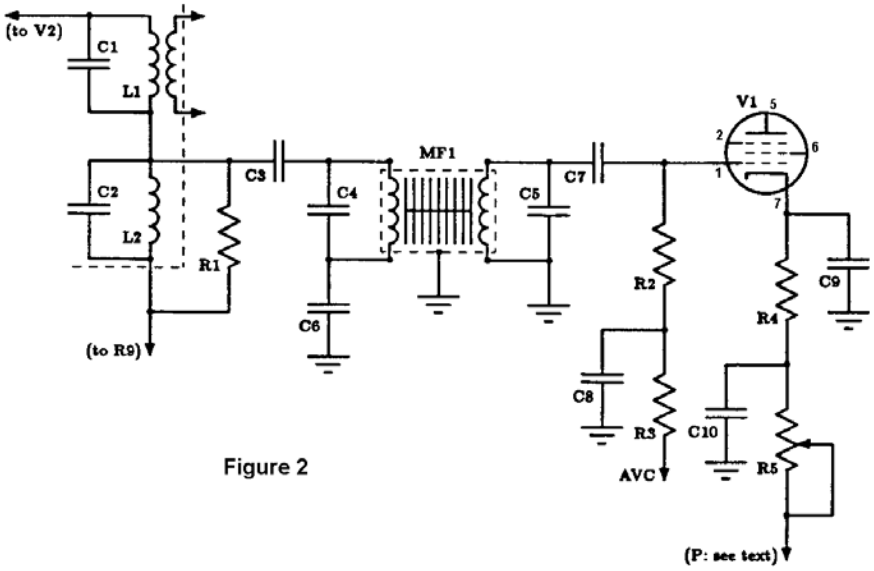

Figure 2

Figure 2		HQ-180A
C1	22	----
C2	90	----
C3	.01, 1 KV	----
C4	Ct (see text)	----
C5	Ct (see text)	----
C6	.01, 1 KV	----
C7	.01, 1 KV	----
C8	0.01	C130
C9	0.01	C158
C10	.01, 1 KV	----
L1	?	----
L2	?	----
MF1	see text	----
R1	100 K	R107
R2	100 K	----
R3	100 K	R36
R4	180	----
R5	2500, 2 W	----
V1	6BA6	----

Look back at **Figure 1** and notice the difference between the original V1 cathode circuit and the modification in Figure 2. All mechanical filters introduce some signal loss, called insertion loss, typically on the order of 6 - 8 db or about 1 S-unit. Insertion loss is usually inconsequential, but if you are a perfectionist like me, then you will want to try to restore S-meter readings to their original values.

In many modifications there are easy ways to do this, and the modified cathode circuit of **Figure 2** illustrates one such method.

Notice that R4 of **Figure 1** has been replaced by R4, R5, and C10 of **Figure 2**. For reasons which I will discuss later, you should not replace R4 of **Figure 1** by a 2500 ohm 2 watt variable resistor in an attempt to simplify the cathode modification.

The AVC feed for VI of **Figures 1 and 2** is parallel. Because R3-C4 of Figure 1 [R3-C8 of Figure 2] is part of the '180 time constant circuit, they should not be changed [and have not been changed]. The load resistor R2 has been changed from 22 K in **Figure 1** to 100 K in **Figure 2**. Collins recommends load resistors of at least 50 K for FA, FB, and N filters. You may use any value in the 50 K - 500 K range.

The filter input circuit is not the same as recommended by Collins, partly because L1-C1 and L2-C2 are switched by the '180 depending on the band, making it difficult to design and construct an alternate circuit. Also, it makes no sense to unnecessarily remove parts while modifying a receiver.

So the input circuit takes advantage of the existing 455 kHz IF transformer L2-C2, and is typical of many modifications except for that R1 will usually not be present. **Figure 3** is a small piece of a **SP-600** schematic showing the 455 kHz gate V1 (V7), the 3.955 MHz to 455 kHz converter V2 (V6), and part of T3, the 455 kHz IF transformer which includes a multi position 455 kHz crystal filter.

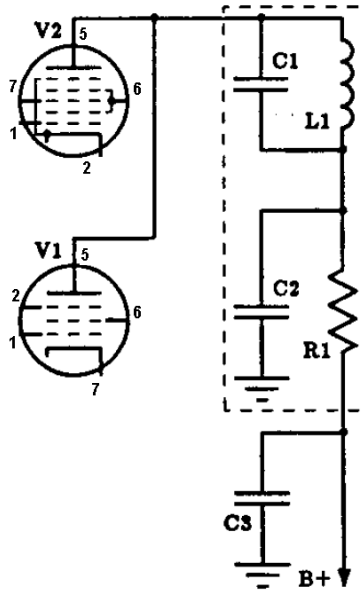

	Figure 3	SP-600
C1	220	C107
C2	0,022	C108
C3	0,022	C109
L1	?	L36
R1	2200	R41
V1	6BA6	V7
V2	6BE6	V6

In contrast to the' 180 modification which provides mechanical filter selectivity only for the low bands, bands 1 - 4, the modification of the **SP-600** in **Figure 4** provides mechanical filter selectivity for all bands.

Assuming there is ample space inside the **SP-600** chassis near V13, the **Figure 4** modification should be especially easy. It only requires disconnecting the B+ line at the junction of C3 and R1 in Figure 3 (never having seen a **SP-600**, I am not sure where C10 attaches to the B+ line...,you may be able to use C10 in place of C2 if it attaches appropriately), and disconnecting the wire which joins the junction of V1 and V2 pins 5 and the junction of LI-C1 of Figure 3. The modification in **Figure 4** requires a mechanical filter of your choice (I like the N series), a 10 mH, 100 mA choke (you can cannibalize a nice 12 mH choke from an R-390A IF sub-chassis), a 2200 ohm half watt resistor, five.01 1 KV disc ceramic capacitors, two filter resonating capacitors Ct [C3 and C4], some stranded pieces of hookup wire, perhaps a few short pieces of coax, a little aluminum metal or printed circuit board work to fabricate a mounting arrangement for the filter, and you are in business.

A similar modification could also be done to the '180 because it uses a similar conversion scheme [following V1 of **Figure 1**]. The only differences are the' 180 high IF is a 3.035 MHz [which does not affect the modification, the bypass capacitor C9 and dropping resistor R2 of Figure 4 are outside the' 180 IF transformer, and the' 180 has no bypass capacitor corresponding to C10 in **Figure 4**. The main reason I did not do a style modification on my '180 is because I wanted a mechanical filter immediately following the first mixer for best BCB performance.

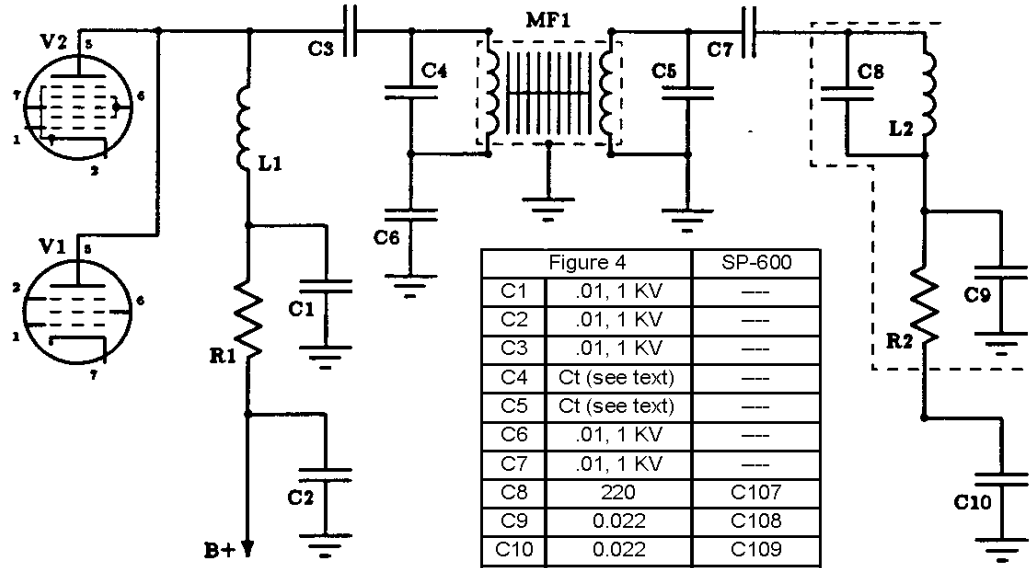

Figure 4

Figure 4		SP-600
C1	.01, 1 KV	---
C2	.01, 1 KV	---
C3	.01, 1 KV	---
C4	Ct (see text)	---
C5	Ct (see text)	---
C6	.01, 1 KV	---
C7	.01, 1 KV	---
C8	220	C107
C9	0.022	C108
C10	0.022	C109
L1	10 mH, 100 ma	---
L2	?	L36
MF1	see text	---
R1	2200	---
R2	2200	R41
V1	6BA6	V7
V2	6BE6	V6

Figure 5 is another part of a SP-600 schematic where a mechanical filter can be inserted, and **Figure 6** below shows the modification which is similar to the' 180 modification in Figure 2. **Figure 6** also illustrates the series AVC circuit discussed in Par 2 (HSN 12).

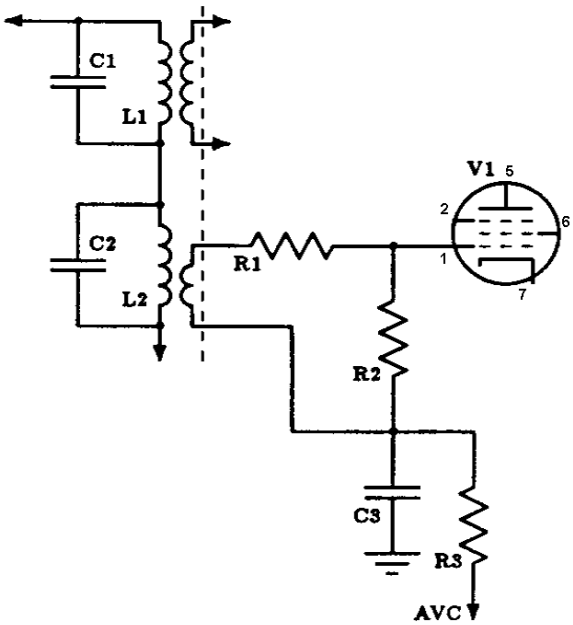

Figure 5		SP-600
C1	55	C67
C2	220	C69
C3	0.01	C165
L1	7	L31
L2	7	L32
R1	1500	R33
R2	510	R32
R3	10 K	R53
V1	6BA6	V7

It requires a bit more "surgery" than the **Figure 4** modification, but has the advantage (or disadvantage, depending on your point of view) of placing the mechanical filter immediately after the first mixer.

Similar to the '180 modification, the **Figure 6** modification provides mechanical filter selectivity only for the low bands, bands 1 - 3. I have not done the Figure 6 modification, so I do not know how difficult it may be to access the junction of L1-CI and L2-C2. I would appreciate receiving a letter from any reader who does this modification concerning the difficulty or ease of accessing the junction of L1-CI and L2-C2, and any other points about this modification so that I can include additional information in future revisions.

Notice, too, that both R1 and R2 should be removed, and there should be no components connected to the output link coupling of L2 (L32). The **Figure 6** modification is different from the '180 modification in another important way. In both cases, signal loss is intentionally introduced before the "gate" [V1 (V17) of Figure 1 and V1 (V7) of **Figure 5**] because an IF amplifier [which the "gate" essentially is] has more gain than a converter [which is used in place of the "gate" for the high bands signal path]. But the methods of introducing signal loss are different, cf. **Figures 1 and 5**.

Having no direct experience with a **SP-600**, I do not, know what effect the mechanical filter, modification in **Figure 6** will have on mechanical filter insertion loss or gain for the low bands signal path. In other words, I cannot predict whether the sum of the mechanical filter insertion loss plus the gain from eliminating the impedance mismatch at the grid of V1 (V7) in **Figure 5** will be positive or negative. In the best of all possibilities, the loss and gain would exactly cancel, requiring no further circuit changes. If the net effect is a loss, I will describe a simple solution later which is also applicable to the modification in **Figure 4**. If the net effect is a gain, then gain reduction should be applied to the gate, and I will describe a simple solution later which uses a circuit borrowed from the' 180.

Perhaps it is appropriate here to give an important ***WARNING***: impedance mismatching should never be used at either the input or output of a mechanical filter because it may [and usually will] cause all kinds of anomalous performance, including greatly increased insertion loss, possible spurious responses such as harmonic and inter-modulation distortion, *greatly* increased pass band ripple, and greatly reduced stop band rejection.

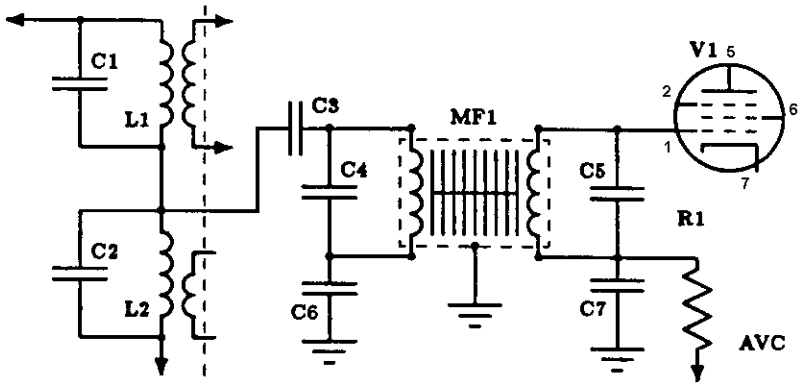

Figure 6		SP-600
C1	85	C67
C2	220	C69
C3	.01, 1 KV	----
C4	Ct (see text)	----
C5	Ct (see text)	----
C6	.01, 1 KV	----
C7	0.01	C165
L1	?	L31
L2	?	L32
MF1	see text	----
R1	10 K	R53
V1	6BA6	V7

If the thought of removing and opening up T2 to find the junction of L1-C1 and L2-C2 blows your mind, not to mention the potential problem of rewiring T2 to bring a lead from the junction to a lug on the base of T2 so that you can access the junction, then you might like to consider an alternate approach in Figure 7.

As I have indicated above, the problem with connecting a mechanical filter between the grid of V1 and the junction of R1 and R2 of **Figure 5** is the resulting impedance mismatch which would probably cause all sorts of anomalous filter performance. But did you know that FA and FB (and probably N) series mechanical filters can be tuned in two ways - parallel and series?

The parallel tuning is generally found in most production circuits, and in fact I have never seen the series tuning used in practice (it is mentioned briefly in Collins data sheets for the FA and FB series filters) . Parallel tuning is used for loads of 100 K ohms or more, which is perfect for tube plates and grids, and for high impedance parallel L-C circuits such as in the previous examples.

Series tuning is used for loads of 500 ohms or less, which would seem ideal for the 510 ohm load presented by R2 of **Figure 5**. Never having tried it, I can make no promises for the modification of **Figure 7**. If anyone checks it out, please drop me a line.

Figure 7 SP-600

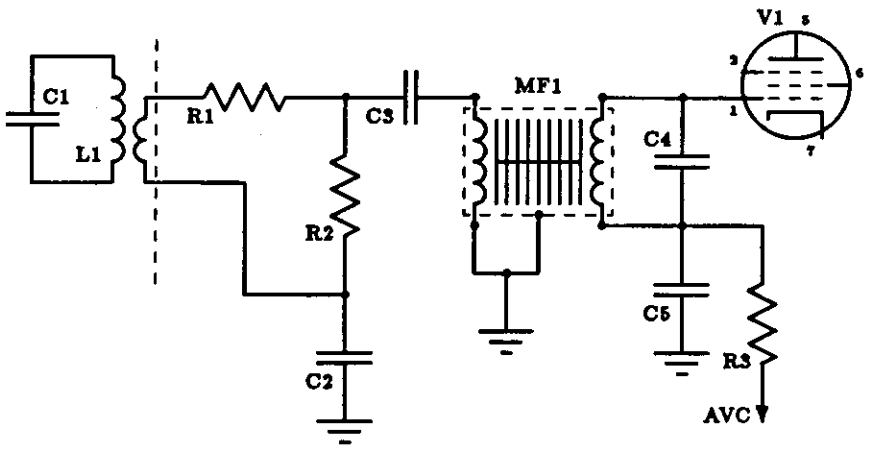

As I said above, for the **SP-600** there is a simple way to compensate for any reasonable (5-10 dB) insertion loss introduced by a mechanical filter. **Figure 8** shows the method: unsolder the wire at the junction of R1 (R95) and R2 (R96), remove R2 (R96), and replace it with a 25 K, 2 W variable.

The R1-R2 circuit is a voltage divider which provides about -10 VDC for the grid of V11, thus substantially reducing the gain of V11. This is the same principle used for AVC, except that the AVC voltage varies depending on signal level. Just as a guess, the modification in **Figure 8b** may permit an additional 20 dB gain from V11, which is much more than should be needed.

C1	220	C69
C2	.01, 1 KV	----
C3	a (see text)	----
C4	a (see text)	----
C5	0.01	C165
L1	?	L32
MF1	see text	----
R1	1500	R33
R2	510	R32
R3	10 K	R53
V1	6BA6	V7

The 25 K, 2 W variable resistor can be mounted almost anywhere you please as long as you don't run the connecting wire near RF, mixer, oscillator, and IF stages which precede V11 in the signal path. Because variable resistors are notorious for promoting anomalous performance as they age, the best approach is to replace R2 with two fixed resistors soldered in place.

The final circuit in this collection of **SP-600** mechanical filter modifications is a gain reduction method for the "gate." **Figure 9a** shows the original V1 (V7) cathode circuit, which is similar to the method used in older '180's. Look back at Figure 2 and you will see that the circuit of Figure 9b is essentially the same as the one which works well in my '180 modification. The circuit in Figure 9b should allow up to 20 dB of gain reduction, i.e., about 3 S-units. Like the modification of Figure 8b, the best approach is to replace R1 and R2 in **Figure 9b** by a fixed resistor after the required value (180 ohms plus the experimentally determined value of R2) has been determined. The bypass capacitor C2 is desirable to minimize stray signal paths while both R1 and R2 are in use because it will probably be necessary to mount R2 some distance away from pin 7 of V1 (V7).

At this point it is perhaps appropriate to say that the **Figure 9b** modification is intended for use only with the **Figure 6** or **Figure 7** modification, while **the Figure 8b** modification is intended for use only with the **Figure 4** modification.

There are several points to consider before you rush off and add a mechanical filter to your **SP-600**. First, which filter series and what band width will you choose? If you never listen casually, and only DX, then I suppose a 2 kHz band width filter is the logical choice. But I presume you have considered that a 2 kHz bandwidth significantly reduces fidelity.

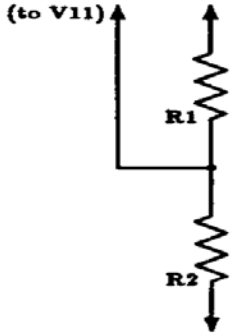

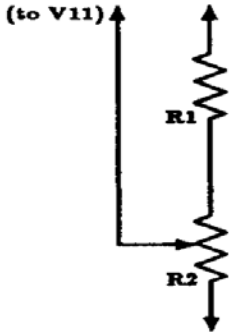

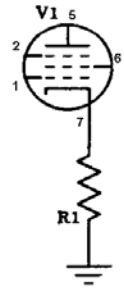

Figure 8a		SP-600
R1	82 K	R95
R2	22 K	R96

Figure 8b		SP-600
R1	82 K	R-95
R2	25 K, 2 W	----

Figure 9a		SP-600
R1	390	R112
V1	6BA6	V7

A good compromise is a 4 kHz filter, which I used for my '180 modification, but I missed the wider band widths enough to have caused me to begin preparations for a switched mechanical filter arrangement for my '180. That is not as difficult as you might think, because an R-390A IF sub-chassis contains all the parts necessary for such a construction project. Second, you will not be able to use the **SP-600** crystal filter narrow bandwidths (1.3, 0.5, and 0.2 kHz) unless its center frequency just happens to be very nearly 455 kHz. To avoid an unpleasant surprise later, measure the crystal filter center frequency before you start. An off-frequency crystal filter will not stop the determined experimenter, who will trade crystals until the center frequency is acceptable. An R-390A IF sub-chassis contains a crystal filter with a 455 kHz crystal which may suffice. Third, where and how will you mount the mechanical filter and its associated components?

In my experience it takes about the same amount of work to develop a satisfactory mounting arrangement for both the F/A, F/B and N series filters.

In both cases be sure that a grounded metal shield is placed between the input and output terminals (including all associated components such as Ct's and leads. If it is not possible to isolate parts of the leads, double shielded cable may be required to avoid degrading filter stop band performance. Fourth, if you do the modification in Figure 6, give some thought to opening up transformer T2 for access to the junction of LI-C1 and L2-C2. Assuming T1 has a "quick release" shield style and there is enough nearby empty space, it may be possible to modify T1 in situ, without removing the entire transformer assembly from the chassis. But do not hesitate to remove the entire transformer assembly if it is necessary.

The HQ-150 is another receiver in the Hammarlund line which can be fitted with a mechanical filter. Figure **10a** shows part of the first IF transformer (T1) and the Ave and input to V1 (V4). The '150 modification in **Figure 10b** is similar to the Figure 6 modification in that you will have to remove the IF transformer shield and rewire the output. I have not done this modification, but reports of a similar modification to a HQ129 indicate that the increased signal level due to modifying L1 approximately compensates for mechanical filter insertion loss which should make additional modifications unnecessary. However, if a net signal level gain is experienced after adding a mechanical filter, the gain-reduction modification in **Figure 9b** may be used at the cathode of V1 (V4) in **Figure 10b**. And, if a net signal loss is experienced, the inductor in T3 can be modified like L1 of **Figure 10b**. Apparently it may require modifications to both T1 and T3, and, in addition, a gain-reduction modification to the cathode of V1 (V4) to restore the '150 gain distribution.

Synchronous Detection of DSB and ISB Signals

By Peter C. McNulty, WA1SOV May 2, 1999

Background

A Synchronous Detector designed with the use of an LM311 and an Analog Devices AD607. This is a very basic design. It functions as a product detector and when JMP2 is closed and JMP 1 is open, it functions fully synchronously locking to the 455 KHz I.F. provided at the input. The 455 KHz input should be pre-filtered to remove unnecessary noise from the signal so as to improve locking performance. This circuit has been tested with a Hammarlund SP-600, and it functions quite well with the I.F. out of this receiver connected to J1 of this circuit. Most of the testing has been done with the SP-600 in its 8 KHz position however, any of the passband selections work fine. The narrower the bandwidth selection the better rejection there is against unwanted adjacent channel interference. Additional I.F. selectivity can be had by filtering just the signal provided to U1 and not the I.F. sent to U2. This is not shown below but can easily be implemented. Further improvement could be had, by regenerating the carrier with a Phase Locked Loop such as the NE564. This is necessary for use on signals with marginal carrier signal or suppressed carrier. The loop filter designed for use with such a PLL would provide much greater rejection of unwanted adjacent channel noise. This is an experimental breadboard and is by no means a polished performer. It does afford the experimenter the opportunity to play with a configuration that can provide synchronous detection. Have Fun!

Theory of Operation

The signal applied to J1 is between 1 to 2 volts, rms and is hard limited by U1, LM311. The limiting is necessary to remove amplitude variations of the signal due to the modulation components present. It is only the carrier we want the Phase Locked Loop in U2 to lock-up to. U1 is configured as a zero crossing detector. R1 & R2 bias the input signal to half of VCC. R3 & R4 provide the reference voltage to the comparator, which will determine the switching point of the comparator. The output of U1 is pulled up to VCC so it provides an output which swings between VCC and ground (+4.5v). It is not recommended to apply greater than 4.5 volts to this circuit because of limitations in U2. Nominally the AD607 runs at as little as 3 volts and under no circumstances wants to run above 5 volts. 4.5 volts is fairly standard and can be gotten from a wall transformer or 3 AA batteries. The output signal of U1 is sent through a trim pot which will limit the amplitude of the PLL reference signal to about 0.5 volts at the FDIN input at pin 1of U2. This signal is also biased at one half of VCC with R10 & R11. The selection of C3 and these resistors is such to minimize any phase distortion caused by the input coupling of these components.

The input signal from J1 is also sent through a resistor network, which conditions the signal for suitability at the input of the product detector in the AD607. These detectors are basically doubly balanced mixers and the local oscillator differs for the two detectors by 90 degrees. The PLL in the AD607 basically takes the reference signal that was limited in U1 and provides a new signal, which is in phase and in quadrature to that reference signal for application to the product detectors as shown in the U2 block. The PLL also has a loop filter, which is optimized for 455 KHz, however I did not notice much difference in performance when this time constant was lowered by an order of magnitude. So I wouldn't be too concerned about this when running I.F.s below 2 MHz.

The detected baseband signal is present at pin 18 of U2 (IOUT), and Pin 17 (QOUT) along with other mixing components. These other components should be filtered and R13, C9, R14, & C8 are selected to filter the outputs with a minimum of phase distortion. If you are going to only utilize this detector as a DSB Detector, then the Quadrature output available is not necessary, and it need not be used for anything. Just pass the In-phase output to an audio amplifier auxiliary input for amplification.

Independent Sideband Synchronous Detection

This circuit has been used to provide a source for detection of independent, upper, and lower sideband signals. Unless there is a carrier present with these signals, it cannot operate in the synchronous mode as configured. An independent sideband (ISB) signal can be detected with this detector by utilizing both outputs (IOUT, & QOUT) and passing them to a phase demodulation network. The principle is very much like phasing sideband modulation, but in reverse. The ISB performance of the detector when locked to a carrier was somewhat disappointing. For some reason that I have not discovered yet, the detector will not demodulate ISB when locked to the incoming carrier. It will however demodulate ISB perfectly when a non-phase locked oscillator running near 455 KHz is applied to J2 and the jumper at JMP 2 is removed and JMP is shorted. For ISB detection an external audio phasing network is necessary.

For this to happen it is necessary to utilize wideband audio phase shift networks known as Allpass Filters coupled with doubly balanced mixers. This network is much like the DOME networks originally designed in the 50's. An Allpass Filter design (see http://home.worldnet.att.net/~wa1sov/technical/allpass/allpass.html) can be used or a Digital Signal Processor (DSP) implementing a FIR filter can be employed. The ladder was how I have debugged this design. The concept is pretty simple. If you realize that the IOUT signal contains both sidebands of the signal in phase with each other, and that the QOUT signal contains the sum of upper and lower sidebands 90 degrees out of phase with the IOUT, then with additional phase delay the upper and lower sidebands can be demodulated independently. The IOUT channel gets passed through one Allpass filter, which alters the phase of the signal, by +45 degrees. The QOUT signal is passed through another Allpass filter, which alters the phase of this signal, by -45 degrees. This leaves a net difference of 180 degrees between the IOUT and QOUT Phase processed signals. Adding the IOUT and the QOUT phase processed signals yields a cancellation of the lower sideband. However, the upper sideband remains at the output of this summation and at twice its original amplitude. Now the same two signal are also subtracted from each other in another network to obtain the lower sideband. The lower sideband is also at twice its original amplitude. Thus the lower sideband appears on one channel and the upper sideband would appear on the other channel when applied to the input of a Stereo amplifier. In order for this to work with any degree of opposite sideband rejection close attention to phase accuracy and amplitude matching are paramount. I have obtained without any special optimization of these circuits when using a DSP running a 256 point FIR Filter, opposite sideband rejections of 30 dB. Better can be obtained though through rigorous optimization. Stay tuned!

The signal demodulated does not have to be synchronous to detect signals independently. The system can be used with an external function generator, which is not phase coherent (free running) with the signal. It will function as an independent sideband product detector and Upper and Lower Sideband can be discerned well with this mode.

I hope this article has stirred some interest in this type of detection. Additionally, CQUAM AM Stereo can be demodulated with the I and Q outputs of this detector by simply summing to obtain one channel and differencing to obtain the opposite stereo channel. This does not require the Allpass phasing network described above. Jerry, WA2FNQ transmits the old QAM Stereo signal that can be demodulated using this technique. There are more developments in the works so check back often.

Stay Tuned!

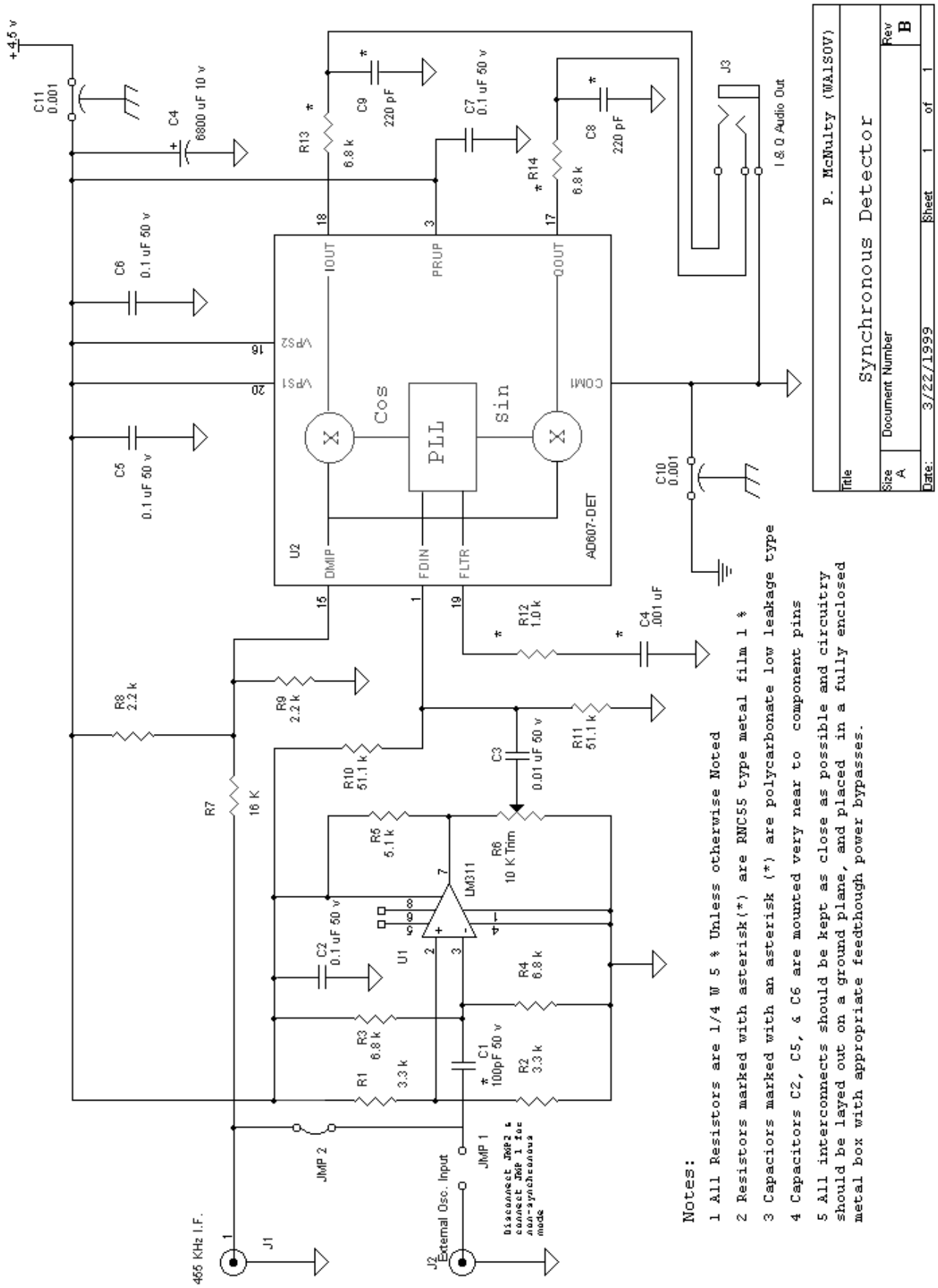
+4.5 v
C11 0.001
C4 6800 uF 10 v
R13 6.8 k
C9 220 pF
C7 0.1 uF 50 v
R14 6.8 k
C8 220 pF
J3
I & Q Audio Out
C6 0.1 uF 50 v
C5 0.1 uF 50 v
IOUT
PRUP
QOUT
VPS2
VPS1
COM1
Cos
PLL
Sin
U2
DMIP
FDIN
FLTR
AD607-DET
C10 0.001
R12 1.0 k
C4 .001 uF
R8 2.2 k
R9 2.2 k
R11 51.1 k
R10 51.1 k
C3 0.01 uF 50 v
R7 16 K
R5 5.1 k
R6 10 K Trim
LM311
U1
C2 0.1 uF 50 v
R4 6.8 k
R3 6.8 k
R1 3.3 k
C1 100pF 50 v
R2 3.3 k
JMP 2
JMP 1
Disconnect JMP2 & connect JMP 1 for non-synchronous mode
455 KHz I.F.
J1
J2
External Osc. Input
Notes:
1 All Resistors are 1/4 W 5 % Unless otherwise Noted
2 Resistors marked with asterisk(*) are RNC55 type metal film 1 %
3 Capacitors marked with an asterisk (*) are polycarbonate low leakage type
4 Capacitors C2, C5, & C6 are mounted very near to component pins
5 All interconnects should be kept as close as possible and circuitry should be layed out on a ground plane, and placed in a fully enclosed metal box with appropriate feedthough power bypasses.
P. McNulty (WA1SOV)
Title
Synchronous Detector
Rev B
Size A
Document Number
Sheet 1 of 1
Date: 3/22/1999

TM 11-851 Resistor and Capacitor Parts List
For R-274A-C, R-320A and R-483 and R-483A (JX-17??)

Note: that there are minor variations in components and wiring in different models except for the BBOD's. Attempt to verify your exact model. Do not necessarily trust the tags. Refer to Andy Moorer's ID list for a double check.

Capacitors

Ref. Desig.	
C1	
C2	
C3	.01 BBOD
C4	
C5	.01 BBOD
C6	Mica, 20pf ± 5% 500 vdcw
C7	
C8	Mica, 2400pf. ± 5% 500 vdcw
C9	Mica, 33pf. ± 5% 500 vdcw
C10	
C11	Mica, 1500pf. ± 2% 500 vdcw
C12	Ceramic 7pf. ± 1pf 500
C13	
C14	Mica, 1000pf. ± 2% 500 vdcw
C15	Ceramic 15pf. ± 5% 500 vdcw
C15A	Ceramic 15pf. ± 5% 500 vdcw
C16	
C17	Mica, 1500pf. ± 2% 500 vdcw
C18	Mica, 100pf. ± 2% 500 vdcw
C19	.01 BBOD
C20	Mica, 20pf ± 5% 500 vdcw
C20A	.01 BBOD
C21	.01 BBOD
C22	.01 BBOD
C23	.01 BBOD
C24	.01 BBOD
C25	Mica, 100pf. ± 2% 500 vdcw
C26	
C27	.01 BBOD
C28	
C29	.01 BBOD
C30	Mica, 20pf ± 5% 500 vdcw
C31	
C32	Mica, 2400pf. ± 5% 500 vdcw
C33	Mica, 33pf. ± 5% 500 vdcw
C34	
C35	Mica, 1500pf. ± 2% 500 vdcw
C36	Mica, 85pf. ± 2% 500 vdcw
C37	Mica, 100pf. ± 2% 500 vdcw
C37A	
C38	
C39	Mica, 51pf. ± 2% 500 vdcw

Ref. Desig.	
C40	.01 BBOD
C41	.01 BBOD
C42	.01 BBOD
C43	.01 BBOD
C44	.01 BBOD
C45	
C45A	Mica, 100pf. ± 2% 500 vdcw
C46	
C46	
C47	.01 BBOD
C47	
C48	
C49	.01 BBOD
C50	Mica, 20pf ± 5% 500 vdcw
C51	
C52	Mica, 2400pf. ± 5% 500 vdcw
C53	Mica, 33pf. ± 5% 500 vdcw
C54	
C55	Mica, 1500pf. ± 2% 500 vdcw
C56	
C57	Mica, 85pf. ± 2% 500 vdcw
C57A	Mica, 100pf. ± 2% 500 vdcw
C58	
C59	Mica, 51pf. ± 2% 500 vdcw
C59A	
C60	Ceramic 12pf. ± 5% 500 vdcw
C60A	
C61	.01 BBOD
C62	Mica, 2200pf. ± 5% 500 vdcw
C62A	.01 BBOD
C63	Mica, 39pf. ± 5% 500 vdcw
C63A	.01 BBOD
C64	.01 BBOD
C65	
C66	.01 BBOD
C67	Mica, 85pf. ± 2% 500 vdcw
C68	.01 BBOD
C69	Mica, 220pf. ± 2% 500 vdcw
C70	.01 BBOD
C71	.01 BBOD
C72	.01 BBOD
C73	.01 BBOD
C74	.01 BBOD

C75	Mica, 100pf. ± 2% 500 vdcw
C76	
C77	
C78	Mica, 404pf. ± 1% 500 vdcw
C79	Ceramic, 5pf. ± .25pf 500 vdcw
C80	Ceramic, 5pf. ± .25pf 500 vdcw
C81	
C82	Mica, 820pf. ± 2% 500 vdcw
C83	Mica, 10pf ± 10% 500 vdcw
C84	
C85	Mica, 1200pf. ± 2% 500 vdcw
C86	
C87	Mica, 120pf. ± 2% 500 vdcw
C88	Ceramic 12pf. ± 5% 500 vdcw
C89	Mica, 190pf. ± 1% 500 vdcw
C90	
C91	Mica, 91pf. ± 2% 500 vdcw
C91A	Mica, 100pf. ± 2% 500 vdcw
C92	Ceramic, 51pf. ± 1% 500 vdcw
C93	Mica, 379pf. ± 2% 500 vdcw
C94	
C95	Mica, 42pf. ± 1% 500 vdcw
C95A	Mica, 51pf. ± 2% 500 vdcw
C96	Mica, 610pf. ± 1% 500 vdcw
C97	Mica, 65pf. ± 2 pf. 500 vdcw
C98	BBOD Paper, 22,000pf. 400 vdcw
C99	Mica, 51pf. ± 2% 500 vdcw
C99A	
C100	.01 BBOD
C101	
C102	**BBOD , .022 uf. 400 vdcw**
C103	BBOD Paper, 22,000pf. 400 vdcw
C104	BBOD Paper, 22,000pf. 400 vdcw
C105	.01 BBOD
C106	BBOD Paper, 22,000pf. 400 vdcw
C107	Mica, 220pf. ± 2% 500 vdcw
C108	BBOD Paper, 22,000pf. 400 vdcw
C109	BBOD Paper, 22,000pf. 400 vdcw
C110	Mica, 100pf. ± 2% 500 vdcw
C111	
C112	Mica, 100pf. ± 2% 500 vdcw
C112	
C113	Mica, 100pf. ± 2% 500 vdcw
C114	Mica, 270pf. ± 2% 500 vdcw
C115	BBOD
C116	.01 BBOD
C117	Mica, 220pf. ± 2% 500 vdcw
C118	BBOD Paper, 22,000pf. 400 vdcw
C119	Mica, 300pf. ± 2% 500 vdcw
C120	Mica, 1300pf. ± 2% 500 vdcw
C121	.01 BBOD
C122	.01 BBOD
C123	BBOD Paper, 22,000pf. 400 vdcw
C124	Mica, 220pf. ± 2% 500 vdcw
C125	Mica, 300pf. ± 2% 500 vdcw
C126	Mica, 1300pf. ± 2% 500 vdcw
C127	.01 BBOD
C128	Electrolytic, 10uf. 100 vdcw
C129	
C129A	BBOD Paper, 2 sects.50,000pf.
C129B	Uses 1/2 of above
C130	Ceramic 27pf. ± 5% 500 vdcw
C131	Mica, 430pf. ± 2% 500 vdcw
C132	Mica, 2400pf. ± 5% 500 vdcw
C133	Mica, 430pf. ± 2% 500 vdcw
C134	
C135	.01 BBOD
C136	BBOD Paper, 22,000pf. 400 vdcw
C137	BBOD Paper, 25,000pf. 600 vdcw
C138	Ceramic 7pf. ± 1pf 500 vdcw
C138A	Ceramic, 51pf. ± 1% 500 vdcw
C139	Ceramic 15pf. ± 5% 500 vdcw
C139A	Mica, 51pf. ± 1% 500 vdcw
C140	Mica, 430pf. ± 2% 500 vdcw
C141	Ceramic 100pf. ± 10% 500 vdcw
C142	Ceramic 100pf. ± 10% 500 vdcw
C143	
C144	BBOD Paper, 50,000pf. 600 vdcw
C145	Ceramic 7pf. ± 1pf 500 vdcw
C145A	Ceramic 15pf. ± 5% 500 vdcw
C146	BBOD Paper, 22,000pf. 400 vdcw
C147	
C148	BBOD Paper, 22,000pf. 400 vdcw
C149	
C150	
C151	Electrolytic, 10uf. 100 vdcw
C152	Mica, 10,000pf. **Power Line Filter**
C152A	BBOD, 2 sects. **Power Line Filter**
C152B	Uses 1/2 **Power Line Filter**
C153	.01 BBOD
C154	.01 BBOD
C155	.01 BBOD
C156	BBOD Paper, 22,000pf. 400 vdcw
C157	BBOD Paper, 22,000pf. 400 vdcw
C158	Electrolytic, 10uf. 100 vdcw
C159	Electrolytic, 10uf. 100 vdcw

C160	Electrolytic, 10uf. 100 vdcw
C161A	Electrolytic, 20uf. 450 vdcw
C161B	Electrolytic, 20uf. 450 vdcw
C161C	Electrolytic, 20uf. 450 vdcw
C162	BBOD Paper, 22,000pf. 400 vdcw
C163	BBOD Paper, 25,000pf. 600 vdcw
C164	Mica, 430pf. ± 2% 500 vdcw
C165	.01 BBOD
C166	.01 BBOD
C167	BBOD Paper, 22,000pf. 400 vdcw
C168	Mica, 10,000pf. ± 5% 500 vdcw
C169	Mica, 10,000pf. ± 5% 500 vdcw
C171	C170 to C261 Not used
C262	.01 BBOD
C263	.01 BBOD
C264	.01 BBOD

Resistors

Ref. Desig.	
R1	510K ohm ± 10%, ½ W
R2	10K ohm ± 5%, ½ W
R3	33K ohm ± 5%, ½ W
R4	1K ohm ± 10%, ½ W
R5	510 ohm ± 5%, ½ W
R6	1K ohm ± 10%, ½ W
R7	51 ohm ± 5%, ½ W
R8	51 ohm ± 5%, ½ W
R9	24 ohm ± 5%, ½ W
R10	22 ohm ± 10%, ½ W
R11	22 ohm ± 10%, ½ W
R12	10K ohm ± 5%, ½ W
R13	510K ohm ± 10%, ½ W
R14	33K ohm ± 5%, ½ W
R15	510 ohm ± 5%, ½ W
R16	1K ohm ± 10%, ½ W
R17	51 ohm ± 5%, ½ W
R18	51 ohm ± 5%, ½ W
R19	24 ohm ± 5%, ½ W
R20	22 ohm ± 10%, ½ W
R21	22 ohm ± 10%, ½ W
R22	47K ohm ± 10%, ½ W
R23	47K ohm ± 10%, ½ W
R24	180 ohm ± 5%, ½ W
R25	180 ohm ± 5%, ½ W
R26	510K ohm ± 10%, ½ W
R27	150 ohm ± 5%, ½ W
R28	6K8 ohm ± 10%, ½ W
R29	1K ohm ± 10%, ½ W
R30	1K ohm ± 10%, ½ W
R31	2K2 ohm ± 10%, ½ W
R32	510 ohm ± 5%, ½ W
R33	1K5 ohm ± 10%, ½ W
R34	100K ohm ± 10%, ½ W
R35	100K ohm ± 10%, ½ W
R36	22K ohm ± 5%, ½ W
R37	2K2 ohm ± 10%, ½ W
R38	100K ohm ± 10%, ½ W
R39	33K ohm ± 5%, ½ W
R40	20K ohm ± 5%, ½ W
R41	2K2 ohm ± 10%, ½ W
R48	33K ohm ± 5%, ½ W
R49	2K2 ohm ± 10%, ½ W
R50	10 ohm ± 10%, ½ W
R51	100K ohm ± 10%, ½ W
R52	10K ohm ± 5%, ½ W
R53	33K ohm ± 5%, ½ W
R54	2K2 ohm ± 10%, ½ W
R55	10 ohm ± 10%, ½ W
R56	100K ohm ± 10%, ½ W
R57	10K ohm ± 5%, ½ W
R58	2K2 ohm ± 10%, ½ W
R59	2K2 ohm ± 10%, 1 W
R60	1meg ohm ± 10%, ½ W
R61	1meg ohm ± 10%, ½ W
R62	100K ohm ± 10%, ½ W
R62A	47K ohm ± 10%, ½ W
R63	27K ohm ± 10%, ½ W
R64	
R65	22K ohm ± 5%, ½ W
R65A	47K ohm ± 10%, ½ W
R66	18K ohm ± 10%, ½ W
R67	100K ohm ± 10%, ½ W
R68	100K ohm ± 10%, ½ W
R69	WW, Variable 1K ± 10%, 2 W
R70	10K ohm ± 5%, ½ W
R71	
R72*	WW, 7K5 ohm ± 10%, 20 W
R73	56K ohm ± 5%, ½ W
R74	WW, Variable 1K ± 10%, 2 W
R75	100K ohm ± 10%, ½ W
R76	100K ohm ± 10%, ½ W

R77	47K ohm ± 10%, ½ W
R78	470K ohm ± 10%, ½ W
R79	680 ohm ± 10%, ½ W
R80	2K2 ohm ± 10%, ½ W
R81	100K ohm ± 10%, ½ W
R82	10K ohm ± 5%, ½ W
R83	1K ohm ± 10%, ½ W
R84	Variable 500K ohm ± 10%, 2 W
R85	WW, 2K5 ohm ± 5%, 12 W
R86	82K ohm ± 5%, ½ W
R87	120K ohm ± 5%, ½ W
R88	120K ohm ± 5%, ½ W
R89	82K ohm ± 5%, ½ W
R90	10K ohm ± 5%, ½ W
R91	10K ohm ± 5%, ½ W
R92	10K ohm ± 5%, ½ W
R93	Variable 50K ohm ± 10%, 2 W
R94	1K1 ohm ± 5%, ½ W
R95	82K ohm ± 5%, ½ W
R96	22K ohm ± 5%, ½ W
R97	3.3meg ohm ± 10%, ½ W
R98	470K ohm ± 10%, ½ W
R99	360 ohm ± 5%, 1 W
R100	100K ohm ± 10%, ½ W
R101	Variable 25K ohm ± 10%, 2 W
R102	1K ohm ± 10%, ½ W
R103	510 ohm ± 5%, ½ W
R104	510 ohm ± 5%, ½ W
R105	510 ohm ± 5%, ½ W
R106	510 ohm ± 5%, ½ W
R107	510 ohm ± 5%, ½ W
R108	510 ohm ± 5%, ½ W
R109	510 ohm ± 5%, ½ W
R110	510 ohm ± 5%, ½ W
R111	100K ohm ± 10%, ½ W
R112	390 ohm ± 10%, ½ W
R113	330K ohm ± 5%, ½ W
R114	1K ohm ± 10%, ½ W
R115	1.5meg ohm ± 10%, ½ W
R116	1.5meg ohm ± 10%, ½ W

1	360 ohm ± 5%, 1 W
1	Comp., 2K2 ohm ± 10%, 1 W **V**
1	Comp., Variable 25K ohm ± 10%, 2 W
1	Comp., Variable 50K ohm ± 10%, 2 W
1	Comp., Variable 500K ohm ± 10%, 2 W
1	WW, Variable 1K ohm ± 10%, 2 W
1	WW, 2K5 ohm ± 5%, 12 W
1	WW, Variable 1K ohm ± 10%, 2 W

Capacitor Summary Tally

Quan	Description
44	01 BBOD
16	BBOD Paper, 22,000pf. ± 20% 400 vdcw
1	BBOD Paper, 50,000pf. ± 20% 600 vdcw
3	Mica, 20pf ± 5% 500 vdcw
1	Mica, 10pf ± 10% 500 vdcw
3	Mica, 33pf. ± 5% 500 vdcw
1	Mica, 20pf ± 5% 500 vdcw
1	Mica, 39pf. ± 5% 500 vdcw
1	Mica, 42pf. ± 1% 500 vdcw
5	Mica, 51pf. ± 2% 500 vdcw
1	Mica, 65pf. ± 2 pf. 500 vdcw
3	Mica, 85pf. ± 2% 500 vdcw
1	Mica, 91pf. ± 2% 500 vdcw
10	Mica, 100pf. ± 2% 500 vdcw
1	Mica, 120pf. ± 2% 500 vdcw
1	Mica, 190pf. ± 1% 500 vdcw
4	Mica, 220pf. ± 2% 500 vdcw
1	Mica, 270pf. ± 2% 500 vdcw
2	Mica, 300pf. ± 2% 500 vdcw
1	Mica, 379pf. ± 2% 500 vdcw
1	Mica, 404pf. ± 1% 500 vdcw

Quan	Description
1	BBOD Paper, 250,000pf. ± 20% 600 vdcw
2	BBOD Paper, 2 sects.50,000pf. + 20 -10% 600 vdcw **Power Line Filter**
1	BBOD Paper, 250,000pf. ± 10% 600 vdcw
2	Ceramic, 5pf. ± .25pf 500 vdcw
3	Ceramic 7pf. ± 1pf 500
2	Ceramic 12pf. ± 5% 500 vdcw
4	Ceramic 15pf. ± 5% 500 vdcw
1	Ceramic 12pf. ± 5% 500 vdcw
1	Ceramic 27pf. ± 5% 500 vdcw
2	Ceramic, 51pf. ± 1% 500 vdcw
2	Ceramic 100pf. ± 10% 500 vdcw
4	Mica, 430pf. ± 2% 500 vdcw
1	Mica, 610pf. ± 1% 500 vdcw
1	Mica, 820pf. ± 2% 500 vdcw
1	Mica, 1000pf. ± 2% 500 vdcw
1	Mica, 1200pf. ± 2% 500 vdcw
2	Mica, 1300pf. ± 2% 500 vdcw
3	Mica, 1500pf. ± 2% 500 vdcw
5	Mica, 2400pf. ± 5% 500 vdcw
3	Mica, 10,000pf. ± 5% 500 vdcw
1	Electrolytic, 20uf. 450 vdcw (3X)
5	Electrolytic, 10uf. 100 vdcw

Cleaning & Lubrication Materials and Helpful Hints

Walter Wilson et all

G5S-6 ProGold G5 Spray	(200mL)	$ 13.29
Simple Green		
Mobil 1 10W30or 30W Mix 50/50 W/MMO		
Mobil 1 synthetic gear oil 90 weight		
WD 40 Spray & liquid		
Caig Laboratories, DeOxit®		
Nevr-Dull	5 oz can	$ 3.67
Marvel Mystery Oil (Use 50/50 with Mobile 1.)	16 oz	$ 2.04
Phil Wood Waterproof Grease	3 oz.	$ 2.99
Tri-Flow Drip Bottle -	2 oz.	$ 2.69
Tri-Flow Aerosol Can -	12 ounce	$ 8.29
Mineral oil		
GoJo hand cleaner (the kind without pumice)		
GoJo hand cleaner (with pumice) for corroded aluminum IF cans		
Naphtha		
Something a little stronger - Goof Off		
I will pass along a mix that was passed on to me. 409 - 50% and Ammonia - 50%		
Redline Synthetic hi-pressure bearing grease		
Windex-on the chassis		
Sewing Machine Oil		

General Tips

In most cases I replace the chassis hardware (screws) with new stainless ones. I buy these by the box full!

All the metal pieces that have been removed are cleaned with GoJo hand cleaner (the kind without pumice)

At this point I will mention that on some very old pieces (75A1, SX28), the IF cans often dull and develop a rough oxidized finish. These can be restored by rubbing with hand cleaner again, but the kind with pumice. Wash them down with soap and water when your done and they will be smooth again and look like new! I don't use the pumice cleaner on anything else except my hands!

I usually use only Windex on the chassis. I work it into the crooks and crannies with Q-tips and an old toothbrush. I cut up old T-shirts into little squares and use them as swabs. Slowly but surely I wipe away all the dirt.

Something a little stronger - Goof Off did the trick. It will eat at the silk screen on the chassis if you rub it very hard so try to avoid the silkscreen.

I have never installed an overlay on a dial drum. I just wipe these down with Windex also. I do this many times and gradually the old oxidized surface comes off. You have to know when to stop! It will not look as nice as an overlay, but it is original! Obviously if you go too far, you will need to install an overlay

On the subject of what to lubricate the contact surfaces with, I concluded that silver conductive grease is the thing to use. I found some at a local hardware store, ~ $15 for a tiny syringe full! Its a bit pricey but seems to work quite well.

Aluminum RF cans sometimes become ingrained with dirt, which can be difficult to shift. Solvo Autosol Paste (available from car accessory shops) is good for cleaning these. Take great care not to let it get inside the cans or under the chassis.

I will pass along a mix that was passed on to me. 409 - 50% and Ammonia - 50%.

For the tiny little bearings in the rotary switches, I use teflon lube in a hypodermic type applicator (Do not get teflon on the switch contacts!).

When do I use DeoxIT (R5 Power Booster) vs ProGold vs PreservIT.

DeoxIT (R5 Power Booster). General purpose, for all metal surfaces. Use on non-critical metal surfaces with severe oxidation and corrosion on the metal surface. If there is a discoloration of the metal - it is severe. Use DeoxIT to dissolve the contamination. DeoxIT will also lubricate and protect the surface. For reference, DeoxIT has approximately 20% cleaning action.

NOTE:
The R5 Power Booster concentrate (100% solution) is identical to the DeoxIT concentrate (100%). So all references to R5 Power Booster and DeoxIT concentrates will be the same. In 5% solutions, R5 Power Booster utilizes Dupont Vertrel solvents which are nonflammable and fast evaporating. DeoxIT 5% solutions use OMS (odorless mineral spirits which flammable, slower to evaporate and more cost effective.

ProGold. Plated surfaces (gold and other precious metals). Recommended for critical applications were only slight cleaning action is necessary. For reference, ProGold has approximately 0.5% cleaning action. If the surface looks clean, then applying DeoxIT first is usually not necessary. If there are small amounts of oxidation on the surface, ProGold will be able to dissolve this. ProGold should be applied after DeoxIT when it is a plated metal surface except where noted with PreservIT below. The more critical the connection/part, especially low current applications, ProGold should be the final step.

PreservIT. All metal surfaces. Seals and protects. Recommended after DeoxIT for best protection and NEW metal surfaces, usually in the manufacturing process. It is also ideal where high degrees of pollution (sulfur, salts, acids, etc.) are present. PreservIT should be applied to a clean surface - after using DeoxIT or other cleaning method. For reference, PreservIT has 0% cleaning action.

CAPACITOR COLOR AND LETTER CODES

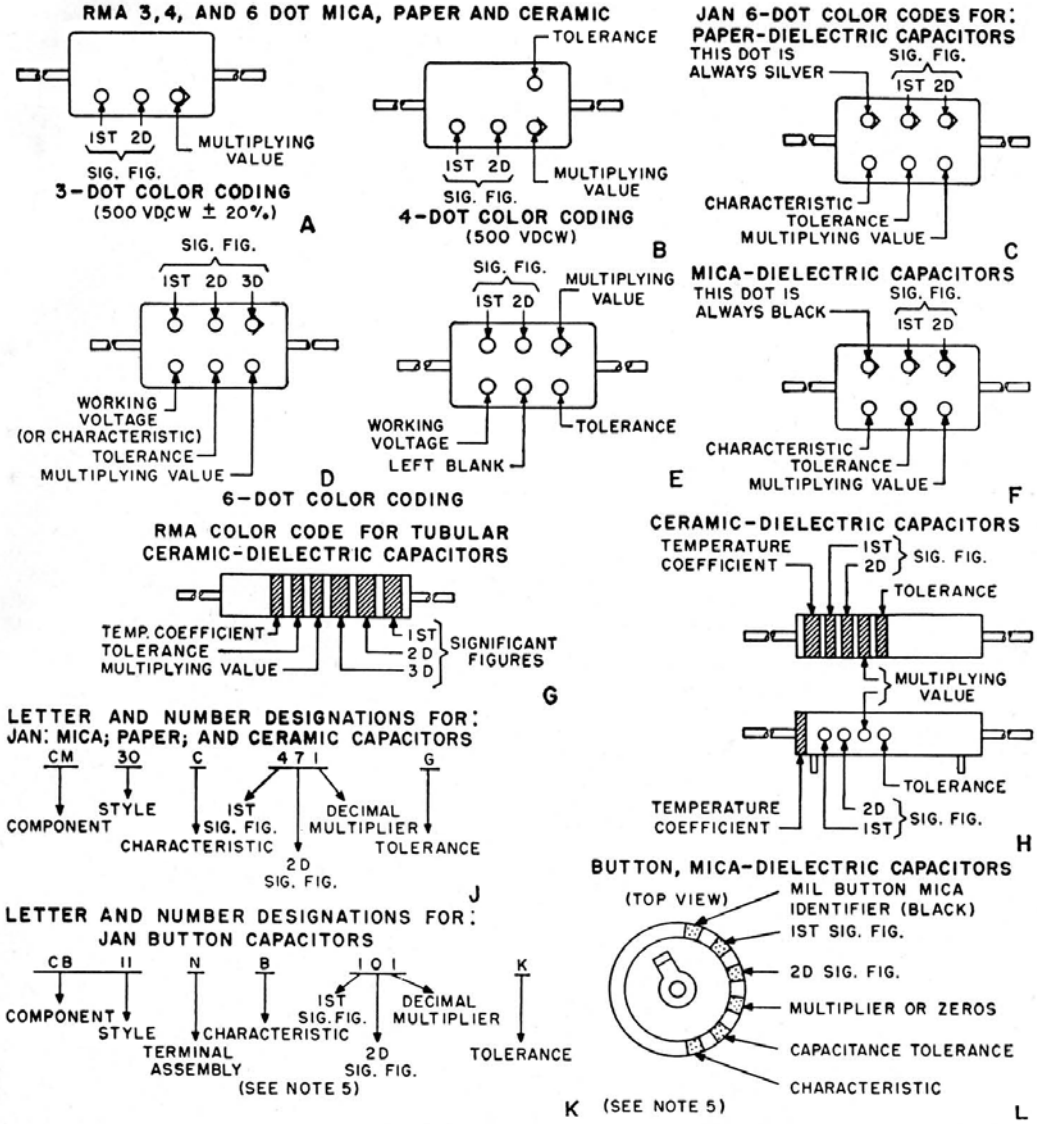

- STANDARDS -					JAN MICA-CM		JAN PAPER-CM		JAN CERAMIC-CC					
										CAP. TOL. FOR MORE THAN 10 UUF		CAP. TOL. FOR 10 UUF OR LESS		
COLOR	SIG. FIG.	DECIMAL MULTIPLIER	% TOL.	VDCW	LETTER TOL.	CHARAC-TERISTIC	LETTER TOL.	CHARAC-TERISTIC	DEC. MULT.	%	LETTER DESIG-NATION	UUF	LETTER DESIG-NATION	CHARAC-TERISTIC
BLACK	0	1	±20	500	M	A	M	A	1	±20	M	±2.0	G	C
BROWN	1	10	± 1	100	-	B	-	E	10	± 1	F	-	-	H
RED	2	100	± 2	200	G	C	-	H	100	± 2	G	-	-	L
ORANGE	3	1,000	± 3	300	-	D	N*	J	1,000	-	-	-	-	P
YELLOW	4	10,000	± 4	400	-	E	-	P	-	-	-	-	-	R
GREEN	5	100,000	± 5	500	-	F	-	R	-	± 5	J	±0.5	D	S
BLUE	6	1,000,000	± 6	600	-	G	-	S	-	-	-	-	-	T
VIOLET	7	10,000,000	± 7	700	-	-	-	T	-	-	-	-	-	U
GRAY	8	100,000,000	± 8	800	-	-	-	-	0.01	-	-	±0.25	C	B
WHITE	9	1,000,000,000	± 9	900	-	-	-	-	0.1	± 10	K	±1.0	F	SL
GOLD	-	0.1	± 5	1,000	J	-	-	-	-	-	-	-	-	A
SILVER	-	0.01	±10	2,000	K	-	K	-	-	-	-	-	-	-
NO COLOR	-	-	±20	500	-	-	-	-	-	-	-	-	-	-
* THE TOLERANCE OF THIS CAPACITOR IS ±30%, NOT ±2%														

NOTES

JAN: JOINT ARMY-NAVY
RMA: RADIO MANUFACTURERS ASSOCIATION

1. THESE COLOR AND LETTER CODES GIVE CAPACITANCES IN MICROMICROFARADS
2. THIS TABLE IS ADAPTED FOR JAN AND RMA COLOR AND JAN LETTER TYPE DESIGNATIONS
3. CERAMIC AND MICA CAPACITORS, BOTH JAN AND RMA, ARE GENERALLY 500 VDCW
4. BUTTON CAPACITORS ARE GENERALLY 300 VDCW
5. READ BUTTON CAPACITOR TOLERANCE UNDER CERAMICS OF MORE THAN 10 UUF
6. CHARACTERISTICS ARE AVAILABLE IN JAN CAPACITOR SPECIFICATION MANUALS
7. THE COMPONENTS USED ABOVE FOR JAN LETTER TYPE DESIGNATIONS ARE:
   CB MICA BUTTON: CC CERAMIC; CM MICA MOULDED: CN PAPER MOULDED

Capacitor Value Translation Table

Older and European schematics often use a different conventions for specifying capacitor valises. This table provides an easy method to compare conventions. This table was adapted from one posted by Just Radios of Canada. A good source for inexpensive tube (valve) equipment parts.

To use this table, just read across. For example, 1uF is same 1,000nF or 1,000,000pF.

uF/ MFD	nF	pF/ MMFD
1uF / MFD	1000nF	1000000pF(MMFD)
0.82uF / MFD	820nF	820000pF (MMFD)
0.8uF / MFD	800nF	800000pF (MMFD)
0.7uF / MFD	700nF	700000pF (MMFD)
0.68uF / MFD	680nF	680000pF (MMFD)
0.6uF / MFD	600nF	600000pF (MMFD)
0.56uF / MFD	560nF	560000pF (MMFD)
0.5uF / MFD	500nF	500000pF (MMFD)
0.47uF / MFD	470nF	470000pF (MMFD)
0.4uF / MFD	400nF	400000pF (MMFD)
0.39uF / MFD	390nF	390000pF (MMFD)
0.33uF / MFD	330nF	330000pF (MMFD)
0.3uF / MFD	300nF	300000pF (MMFD)
0.27uF / MFD	270nF	270000pF (MMFD)
0.25uF / MFD	250nF	250000pF (MMFD)
0.22uF / MFD	220nF	220000pF (MMFD)
0.2uF / MFD	200nF	200000pF (MMFD)
0.18uF / MFD	180nF	180000pF (MMFD)
0.15uF / MFD	150nF	150000pF (MMFD)
0.12uF / MFD	120nF	120000pF (MMFD)
0.1uF / MFD	100nF	100000pF (MMFD)
0.082uF / MFD	82nF	82000pF (MMFD)
0.08uF / MFD	80nF	80000pF (MMFD)
0.07uF / MFD	70nF	70000pF (MMFD)
0.068uF / MFD	68nF	68000pF (MMFD)
0.06uF / MFD	60nF	60000pF (MMFD)
0.056uF / MFD	56nF	56000pF (MMFD)
0.05uF / MFD	50nF	50000pF (MMFD)
0.047uF / MFD	47nF	47000pF (MMFD)
0.04uF / MFD	40nF	40000pF (MMFD)
0.039uF / MFD	39nF	39000pF (MMFD)
0.033uF / MFD	33nF	33000pF (MMFD)
0.03uF / MFD	30nF	30000pF (MMFD)
0.027uF / MFD	27nF	27000pF (MMFD)
0.025uF / MFD	25nF	25000pF (MMFD)
0.022uF / MFD	22nF	22000pF (MMFD)
0.02uF / MFD	20nF	20000pF (MMFD)
0.018uF / MFD	18nF	18000pF (MMFD)
0.015uF / MFD	15nF	15000pF (MMFD)
0.012uF / MFD	12nF	12000pF (MMFD)
0.01uF / MFD	10nF	10000pF (MMFD)

uF/ MFD	nF	pF/ MMFD
0.0082uF / MFD	8.2nF	8200pF (MMFD)
0.008uF / MFD	8nF	8000pF (MMFD)
0.007uF / MFD	7nF	7000pF (MMFD)
0.0068uF / MFD	6.8nF	6800pF (MMFD)
0.006uF / MFD	6nF	6000pF (MMFD)
0.0056uF / MFD	5.6nF	5600pF (MMFD)
0.005uF / MFD	5nF	5000pF (MMFD)
0.0047uF / MFD	4.7nF	4700pF (MMFD)
0.004uF / MFD	4nF	4000pF (MMFD)
0.0039uF / MFD	3.9nF	3900pF (MMFD)
0.0033uF / MFD	3.3nF	3300pF (MMFD)
0.003uF / MFD	3nF	3000pF (MMFD)
0.0027uF / MFD	2.7nF	2700pF (MMFD)
0.0025uF / MFD	2.5nF	2500pF (MMFD)
0.0022uF / MFD	2.2nF	2200pF (MMFD)
0.002uF / MFD	2nF	2000pF (MMFD)
0.0018uF / MFD	1.8nF	1800pF (MMFD)
0.0015uF / MFD	1.5nF	1500pF (MMFD)
0.0012uF / MFD	1.2nF	1200pF (MMFD)
0.001uF / MFD	1nF	1000pF (MMFD)
0.00082uF / MFD	0.82nF	820pF (MMFD)
0.0008uF / MFD	0.8nF	800pF (MMFD)
0.0007uF / MFD	0.7nF	700pF (MMFD)
0.00068uF / MFD	0.68nF	680pF (MMFD)
0.0006uF / MFD	0.6nF	600pF (MMFD)
0.00056uF / MFD	0.56nF	560pF (MMFD)
0.0005uF / MFD	0.5nF	500pF (MMFD)
0.00047uF / MFD	0.47nF	470pF (MMFD)
0.0004uF / MFD	0.4nF	400pF (MMFD)
0.00039uF / MFD	0.39nF	390pF (MMFD)
0.00033uF / MFD	0.33nF	330pF (MMFD)
0.0003uF / MFD	0.3nF	300pF (MMFD)
0.00027uF / MFD	0.27nF	270pF (MMFD)
0.00025uF / MFD	0.25nF	250pF (MMFD)
0.00022uF / MFD	0.22nF	220pF (MMFD)
0.0002uF / MFD	0.2nF	200pF (MMFD)
0.00018uF / MFD	0.18nF	180pF (MMFD)
0.00015uF / MFD	0.15nF	150pF (MMFD)
0.00012uF / MFD	0.12nF	120pF (MMFD)
0.0001uF / MFD	0.1nF	100pF (MMFD)
0.000082uF / MFD	0.082nF	82pF (MMFD)
0.00008uF / MFD	0.08nF	80pF (MMFD)

0.00007uF / MFD	0.07nF	70pF (MMFD)
0.000068uF / MFD	0.068nF	68pF (MMFD)
0.00006uF / MFD	0.06nF	60pF (MMFD)
0.000056uF / MFD	0.056nF	56pF (MMFD)
0.00005uF / MFD	0.05nF	50pF (MMFD)
0.000047uF / MFD	0.047nF	47pF (MMFD)
0.00004uF / MFD	0.04nF	40pF (MMFD)
0.000039uF / MFD	0.039nF	39pF (MMFD)
0.000033uF / MFD	0.033nF	33pF (MMFD)
0.00003uF / MFD	0.03nF	30pF (MMFD)
0.000027uF / MFD	0.027nF	27pF (MMFD)
0.000025uF / MFD	0.025nF	25pF (MMFD)
0.000022uF / MFD	0.022nF	22pF (MMFD)
0.00002uF / MFD	0.02nF	20pF (MMFD)
0.000018uF / MFD	0.018nF	18pF (MMFD)
0.000015uF / MFD	0.015nF	15pF (MMFD)
0.000012uF / MFD	0.012nF	12pF (MMFD)
0.00001uF / MFD	0.01nF	10pF (MMFD)

0.0000082uF / MFD	0.0082nF	8.2pF (MMFD)
0.000008uF / MFD	0.008nF	8pF (MMFD)
0.000007uF / MFD	0.007nF	7pF (MMFD)
0.0000068uF / MFD	0.0068nF	6.8pF (MMFD)
0.000006uF / MFD	0.006nF	6pF (MMFD)
0.0000056uF / MFD	0.0056nF	5.6pF (MMFD)
0.000005uF / MFD	0.005nF	5pF (MMFD)
0.0000047uF / MFD	0.0047nF	4.7pF (MMFD)
0.000004uF / MFD	0.004nF	4pF (MMFD)
0.0000039uF / MFD	0.0039nF	3.9pF (MMFD)
0.0000033uF / MFD	0.0033nF	3.3pF (MMFD)
0.000003uF / MFD	0.003nF	3pF (MMFD)
0.0000027uF / MFD	0.0027nF	2.7pF (MMFD)
0.0000025uF / MFD	0.0025nF	2.5pF (MMFD)
0.0000022uF / MFD	0.0022nF	2.2pF (MMFD)
0.000002uF / MFD	0.002nF	2pF (MMFD)
0.0000018uF / MFD	0.0018nF	1.8pF (MMFD)
0.0000015uF / MFD	0.0015nF	1.5pF (MMFD)
0.0000012uF / MFD	0.0012nF	1.2pF (MMFD)
0.000001uF / MFD	0.001nF	1pF (MMFD)

Test Jigs and Adapters

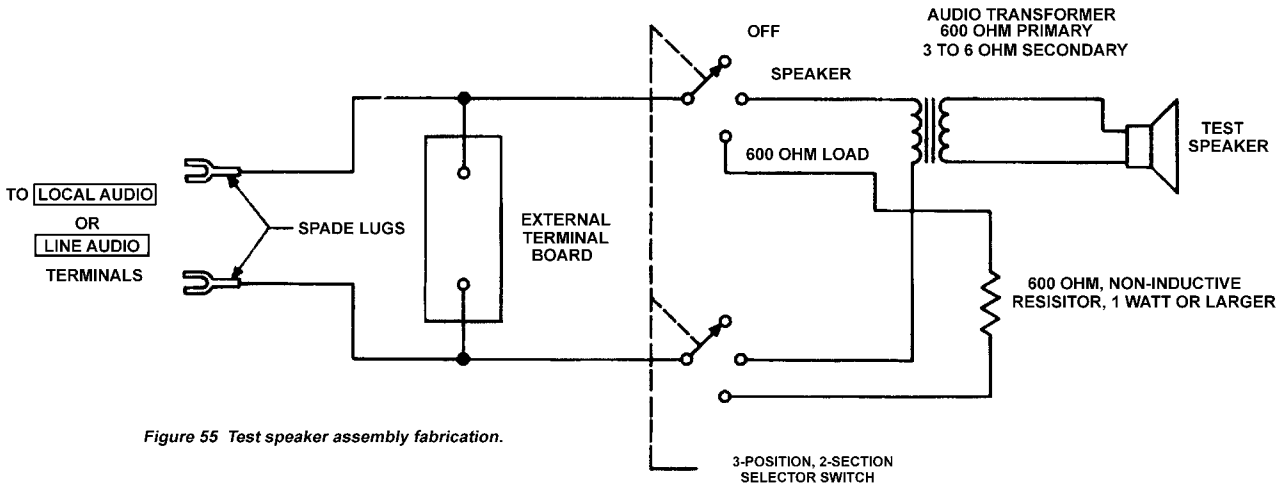

Figure 55 Test speaker assembly fabrication.

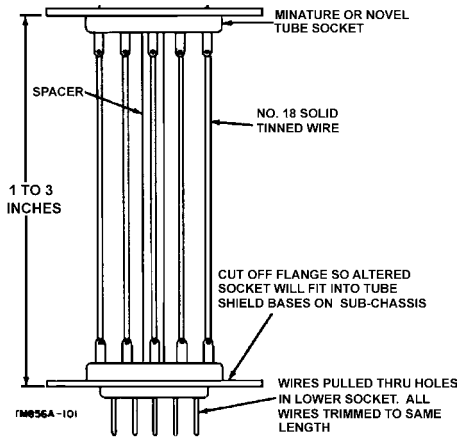

The John R Leary Series

Reproduction of CQ article January 1979 And Other Sources

Old receivers never die. They collect dust. W9WHM tells how he cleaned up, modified and turned the venerable Hammarlund "Super Pro" into a modern, competitive piece of amateur gear.

Souping Up the Super Pro

BY JOHN R. LEARY', W9WHM (SK)
438 Hamilton, Fortville IN 46040.

So you've just bought your new super-duper, ultra. extra-modern, completely solid-state transistorized, up-to-date, best-in-the-world receiver. And you think it's so good that it will last you al least ten years (if WARC 79 allows it!),

Well, guys like me (and 1'll bet thousands of other CQ readers) were born and bred during an era that you young fellers can never really appreciate. Now I don't mean to talk down to you. The fact is. since you were never there, you didn't live it. You see, I was weaned on vacuum tubes. And I guess that the only time that the younger generation ever sees a tube is at a hamfest.

Anyway, about twenty years ago an electronics company called Hammarlund came out with a general coverage receiver that knocked amateurs and SWL's for a loop. It was called the "Super Pro" and it was a magician of a receiver for its time. It became very popular and, as a result, became the subject of many articles in the amateur journals. CQ probably published more information on the "Super Pro" than all the others combined. Names like Geisler, Reed, Lee and others are the fellows who helped to turn the original "Super Pro" into a receiver that will make some of the newcomers say "uncle!"

What I did was incorporate the best features of each article I found. It wasn't an easy job. Certainly not a weekend project. It took me twenty years to complete. Painstaking, deliberate, careful and judicious work. But it was a labor of love.

I added an antenna trimmer circuit, 6AB6 r.f. stages, fast and slow a.g.c. circuits, a product detector and an outboard Q5-er (85 kHz i.f. from a BC-453), among other things. All of the original components were removed, cleaned and remounted on a new 17 x 5 x 15 inch chassis.

The photos tell a more graphic story than I can write, so I refer you to them.

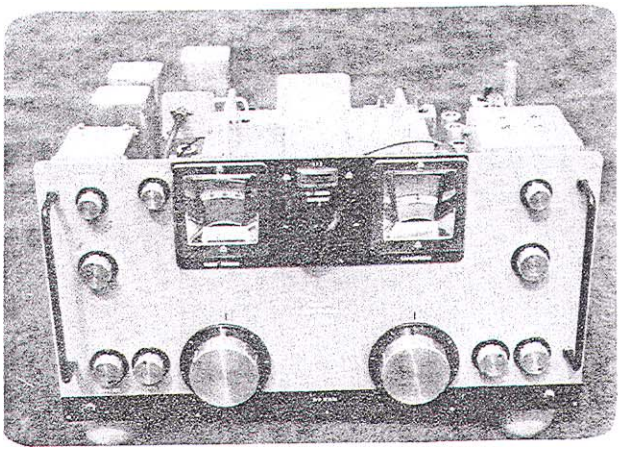

Front view of a restored Super Pro SP-400.

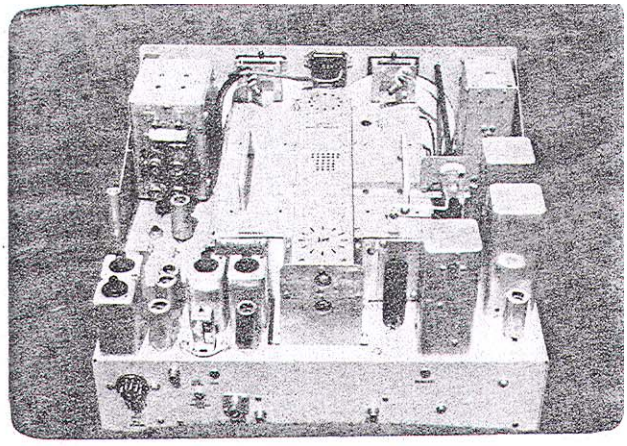

Top rear view of a "Souped-up Super Pro."

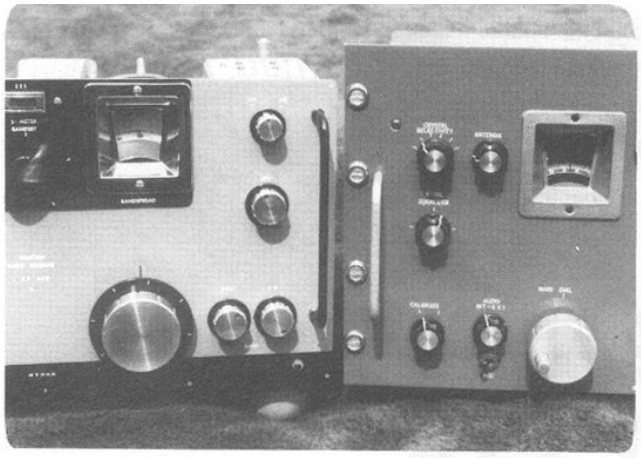

Detailed look at the front panels of two restored units.

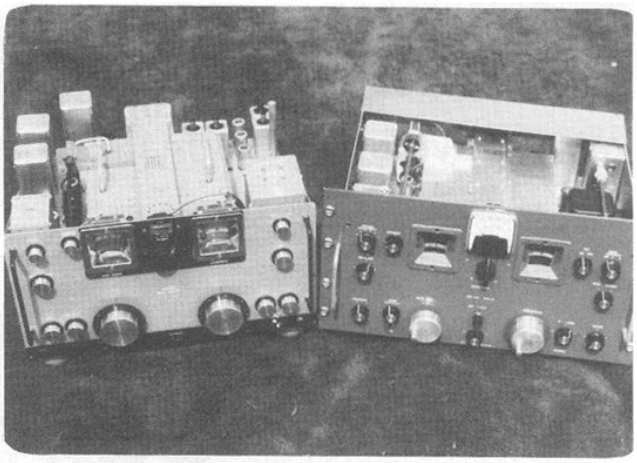

Left: A restored SP-400X (540 kHz to 30 MHz).
Right: Restored SP-400SX (1240 kHz to 40 MHz).

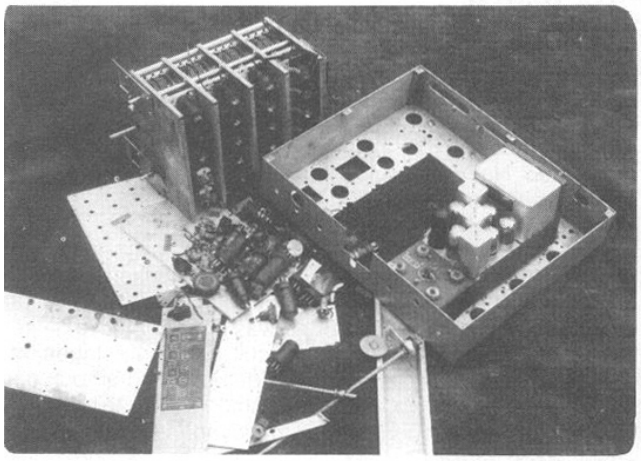

Parts used to build the "Souped-up Super Pro."

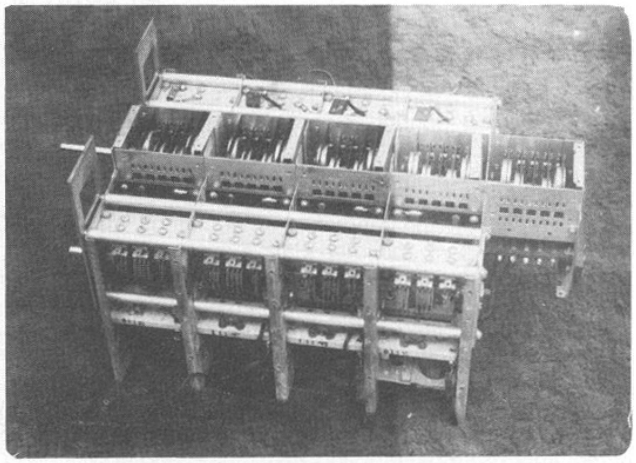

The famous Super Pro tuning unit.

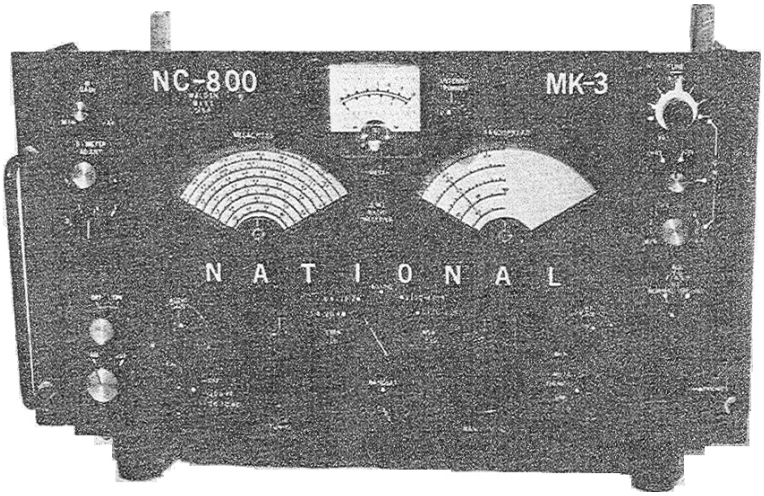

Fig. 8- W9WHM's winter restoration project would truly make a dream receiver for this month's classic rigs.

Fig. 8 shows yet another product of John Leary. W9WHM's handiwork. John built this 21-tube NG-800 from two junked NG-400s in a quite diligent and radical restoration. The front panel was replaced with one cut from scratch, and the dials were moved from the left to the center. It has double tuned IFs. 0 multiplier. 100 kc calibrator, and reflects a full winter's effort in restoration. Beautiful!

The John R Leary SP 600 Chronicles

I'm greatly indebted to Les Locklear for all the material he provided.

All of us at sometime in our life say something like "gee I wish I could have known that person".

John Leary is one of those persons I would have liked to know personally. His electronic and mechanical skills produced remarkable receivers that would far exceed original factory production units in both performance and mechanical build quality. More remarkable is that John didn't have extensive resources nor did he work in the electronics industry. John was always willing to share his accomplishments with all who asked.

John did his masterpieces for his love of the hobby. I sometimes wonder what he would accomplish if he had lived another 20 years. I bet we'd all be amazed!

Unfortunately some of the scanned pictures do not do justice to his work.

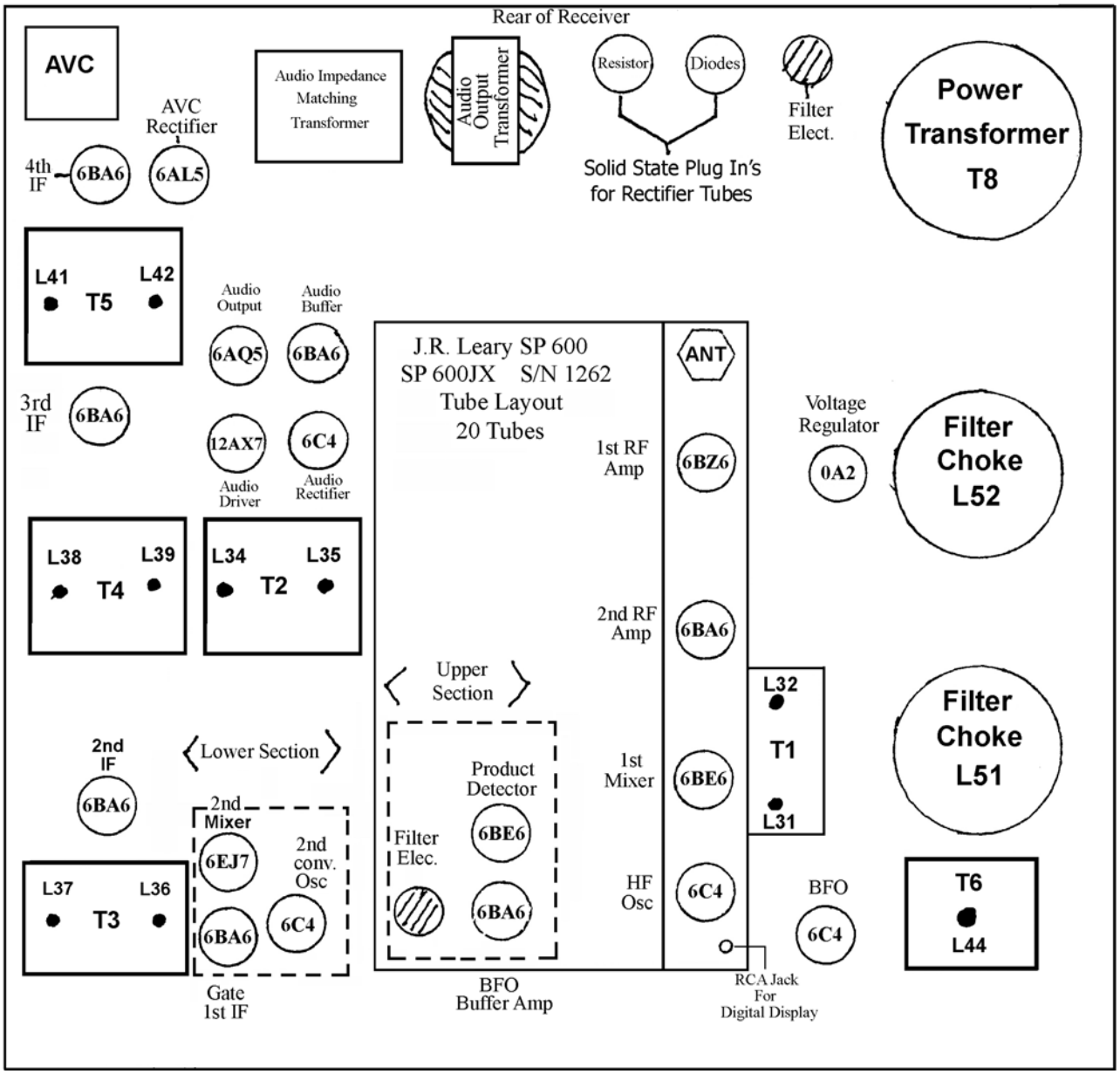

Top view drawing of Number 28. Courtesy of Les Locklear

SP 600 JX S/N 1262 using 20 tubes

One of John Leary's many different SP 600 Modifications
(Courtesy of Les Locklear-present owner)

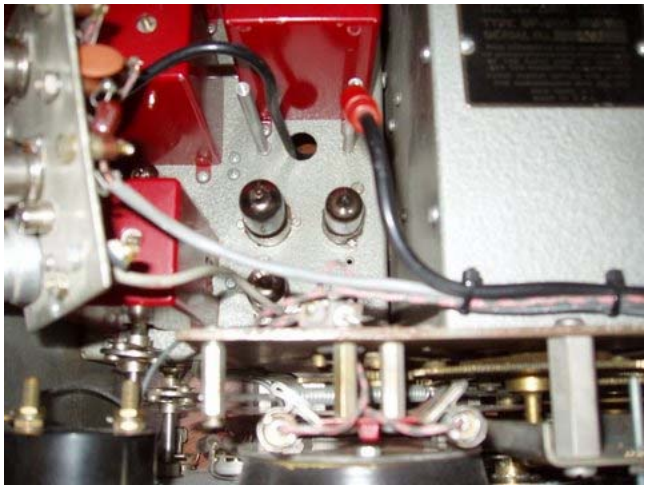

This is the 2nd conversion section using a 6EJ7 for 2nd mixer, improves reception on high bands

Product detector that sets on top of spacer studs over the 2nd conversion section on chassis

Band in use plate painted by Cecil and the engravings were filled in using a black lacquer stick (was brass and couldn't read it)

Front panel

RF Deck, using a 6BZ6 1st rf amp tube

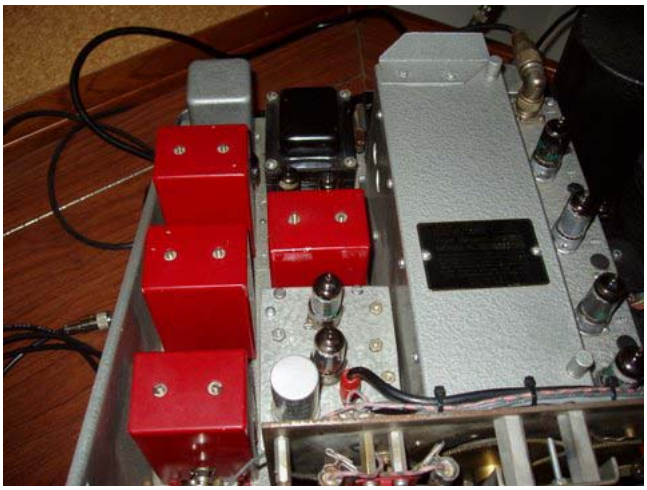

Product detector mounted in place

OA2 Voltage Regulator tube

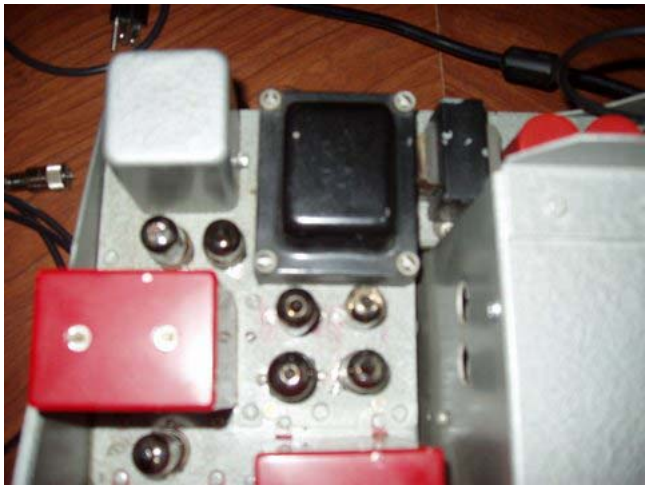

Leary's audio section, 6C4, 6BA6, 12AX7 and 6AQ5 like Collins 75A-4 (don't ask)

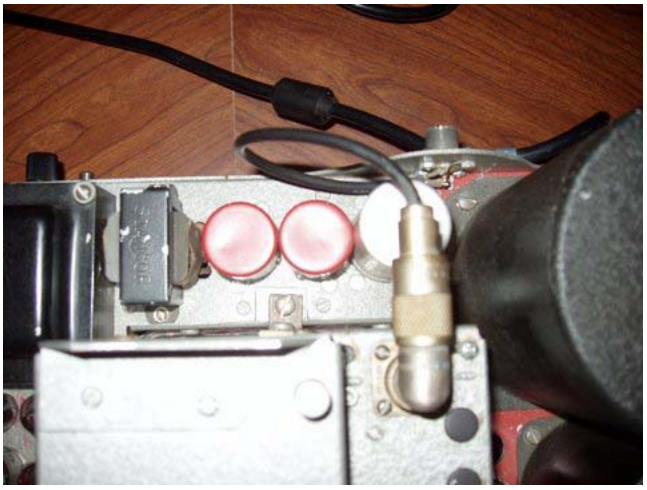

Solid state rectifier section, diodes and resistors under red cans B+ is perfect.

R.H. side of front panel. Note AM/LSB/USB switch at upper right.

L. H. Side of front panel

Top of chassis

Specs for the 2nd Mixer Tube

6EJ7 Sharp-Cutoff Pentode

Class A Amplifier

Plate Voltage ..... 190 V
Grid No. 2 Voltage ..... 190 V
Grid No. 1 Voltage ..... -2.35 V
Plate Resistance (approx) ..... 350K Ω
Transconductance ..... 15K μ℧
Plate Current ..... 10 mA
Grid No. 2 Current ..... 4.1 mA

Front panel

John Leary's Modification Notes

These were copies from John's handwritten notes for his #28 receiver. No attempt has been made to sort or categorize. Some of the comments are bit cryptic and one might have to look at receiver pictures for clarification.

1. Changed in #28. Changed IF screen voltages to 105 volts

2. Changed all sockets to new ceramics.

3. Added speaker terminal on right rear. Added new antenna connector on upper right rear for better access. Also lettered all connections.

3. 200 Kc calibrator. Adjust to WWV. 100 Kc can be used is desired. Near rear. Can be removed for access underneath units for L.F.

4. 1000Kc calibrator near rear panel. No adjustment. Just for locating H F places. Only about 1/2 kc off.

5. 6EJ7 mixer for much better H.F. reception. Cathode adjustment on vertical shaft. Wire nearby was connection for Q multiplier that original owners wanted. Didn't take. Leave alone or clip off if bottom panel is removed.

6. 12AX7 driver to 6AQ5 output. Audio circuit from 75A4. Best ever found. ??? to 6.3 Vac center tapped (transformer) for hum reduction.

7. 6C4 best audio rectifier.

8. Separate bias transformer and filter to relieve current drain on main transformer. Located under main power supply.

9. On rear panel S-meter adjustment. All marked on rear.

10. Separate avc circuit. Diagram is included on a separate page.

12. Complete bias control on rear terminal strip. Adjust –1 volt main receiver "gain" to suit operator. Avc bias to avc rectifier to prevent avc from coming on (for) weak signals. Approximately –3 volts. 3rd. I.F. gain to adjust overall receiver gain to detector.

If very strong signal distorts audio, reduce gain. After adjusting tighten screw on top to lock in place. Figure shown in another location.

13. Crystal phasing on front panel inoperative. It take an oscilloscope which I don't have. I've never found any use for it. Check original manual for alignment. They (crystal phasing controls) have never been very effective.

14. Antenna terminal on upper right side, to move receiver out to try another antenna. (Meaning of this statement unclear.)

15. Wires near antenna terminal on rear of tuning unit, are small capacitor hooking (the) 200-100Kc calibrator to (the) antenna.

16. (The large framework around (the) receiver on top pus tall rear panel on receiver (shown in Number 32) are for one reason only: oscillator stability. Most all complaints of (the) SP 600 when in the 3 Kc or 1.5 Kc position plus c.w. and ssb have been solved by this expensive (hi) addition. (This) was my experiment and it really helped.

17. May have to align receiver slightly after having been moved and jarred around. But it sure is a wonder.

18. Wiring to top R.F. unit is <u>not</u> through (the) I.F. unit on the side which all wires cause trouble. Voltage (unclear) goes to (the) top unit by a 1/4 ?? hole in (the) rear of (the) tuning unit. To?? Under chassis all there were going through I.F. unit on the side has caused problems. So simple to run these out of (the) rear unit.

19. Audio speaker phone switch on front is because the audio, when switched to phones run audio to large resistor to ground audio (transformer to protect.) I think that this what was written but the writing is small and abbreviated.

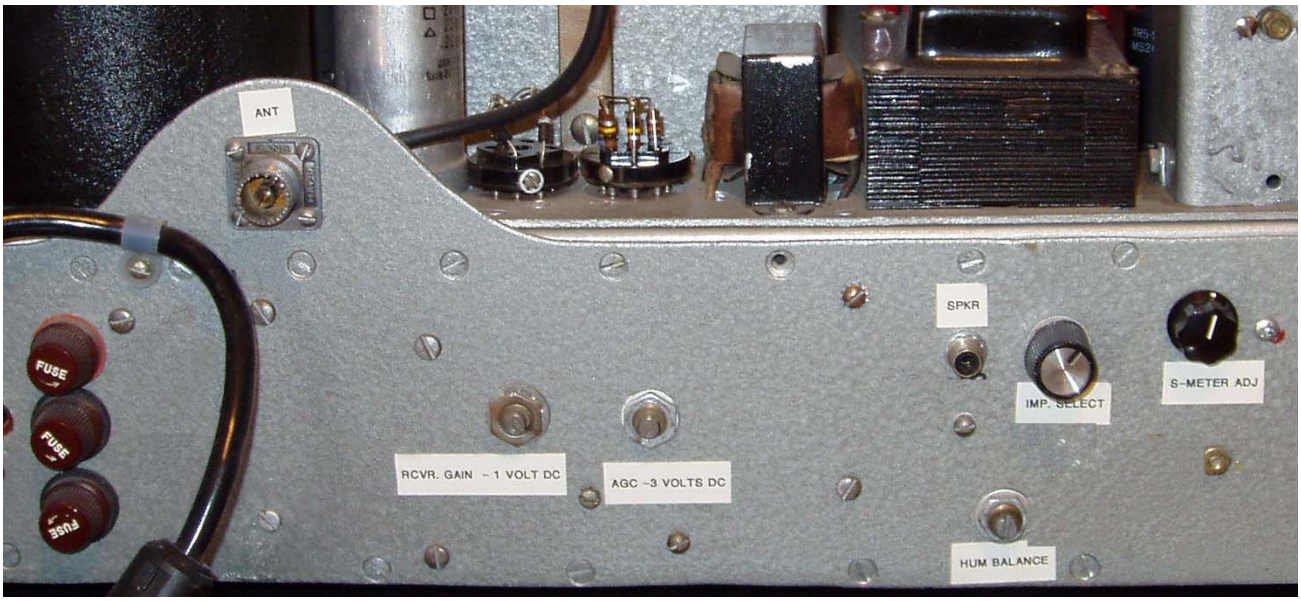

Note the additional improvements added: new antenna connection, extra fuses, AGC level control, and the –1 volt receiver gain control.

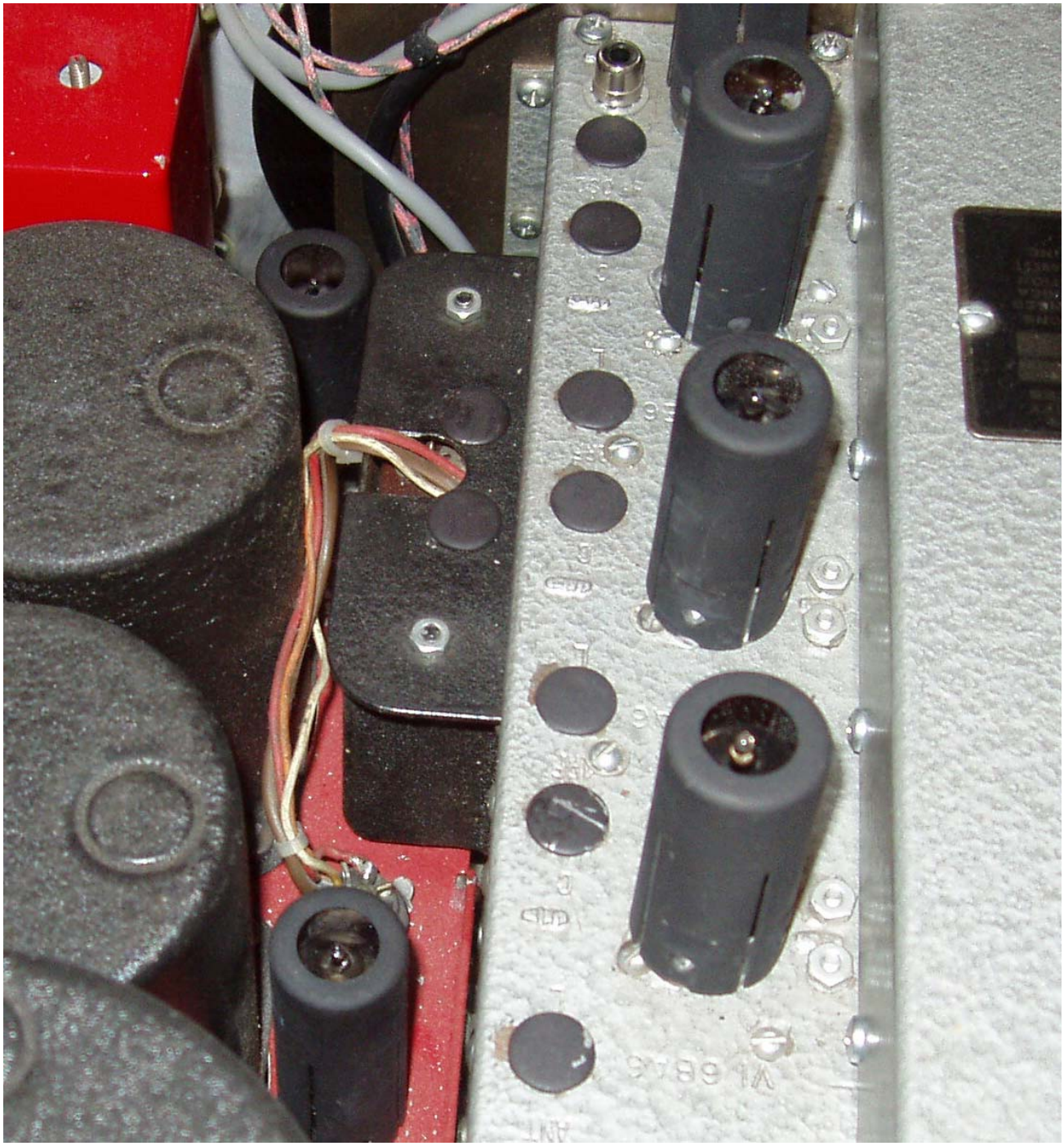

A simpler method of bringing out the leads from the 1st RF-Mixer pod. See John's notes for details.

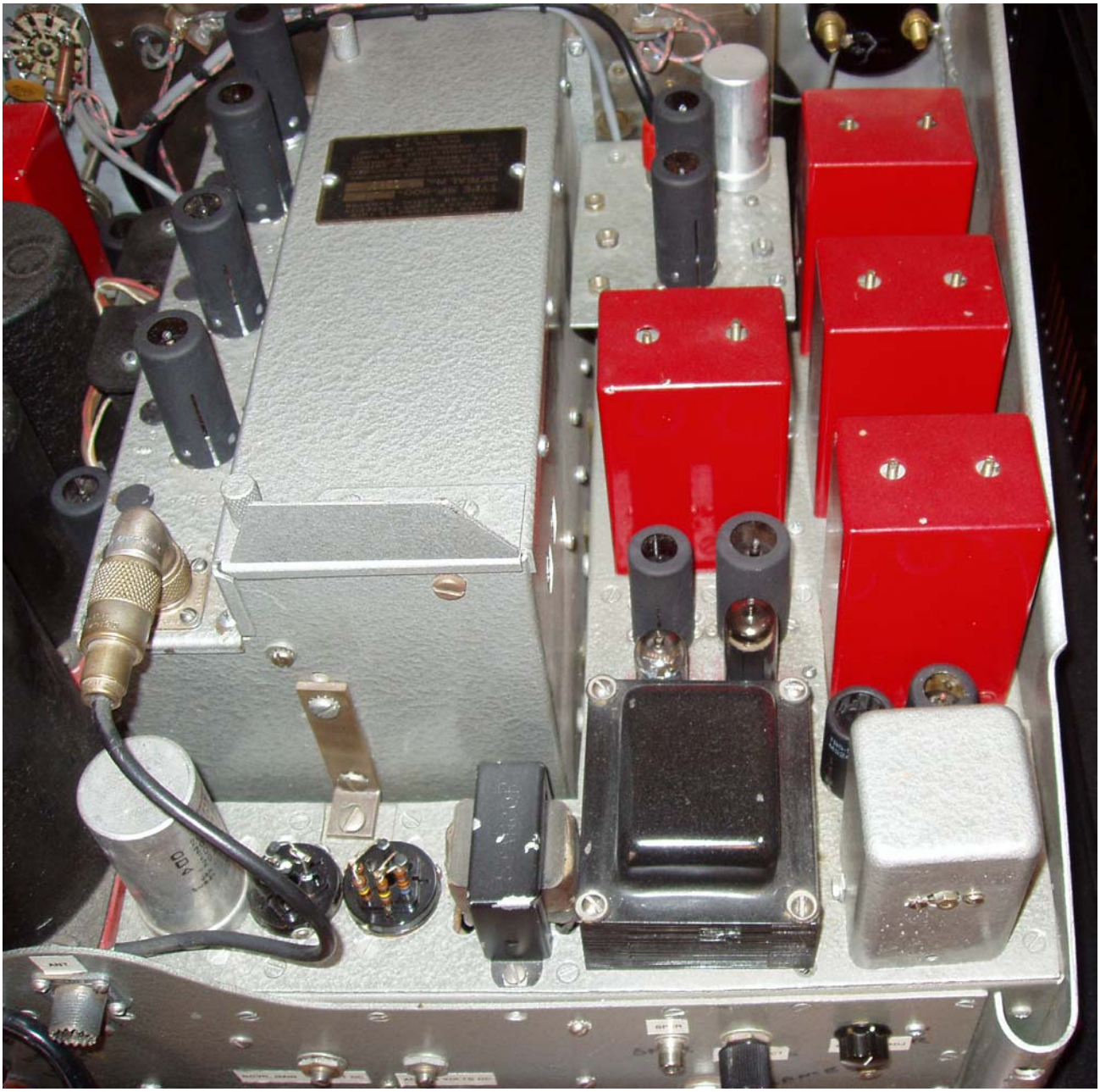

Rear oblique showing from left to right the added filter capacitor, two solid state rectifier units, audio matching transformer, new audio output transformer and AGC transformer. No information was noted for the origin or wiring circuitry of the additional AGC transformer.

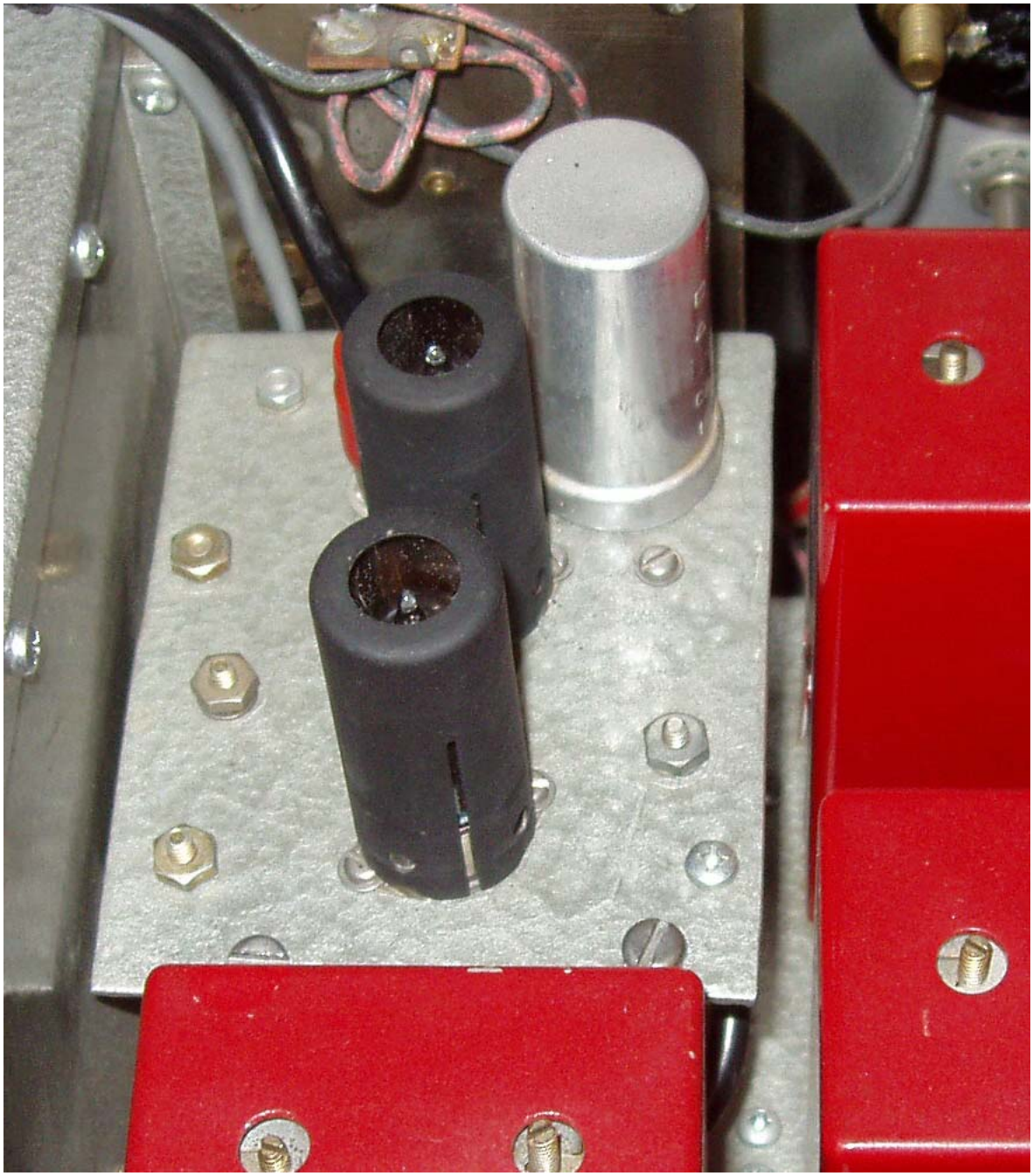

Close up of Product Detector using a 6BA6 and 6BE6,
copied from the Hammarlund HQ-180A product detector.

Version Number 31

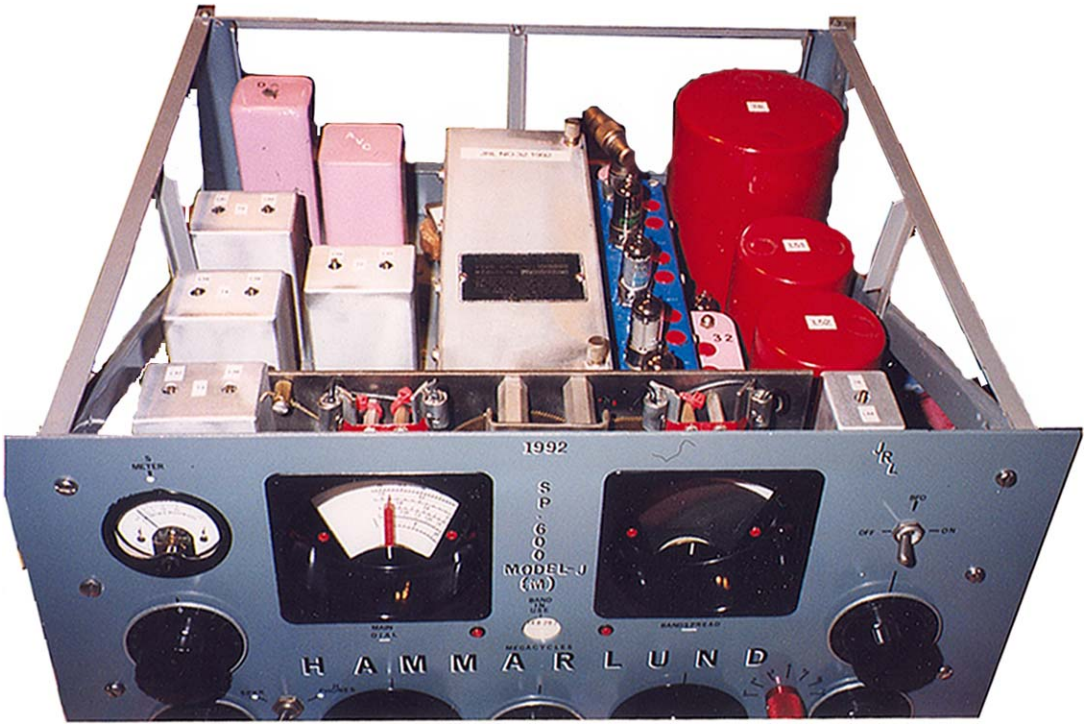

Front view of Version Number 32

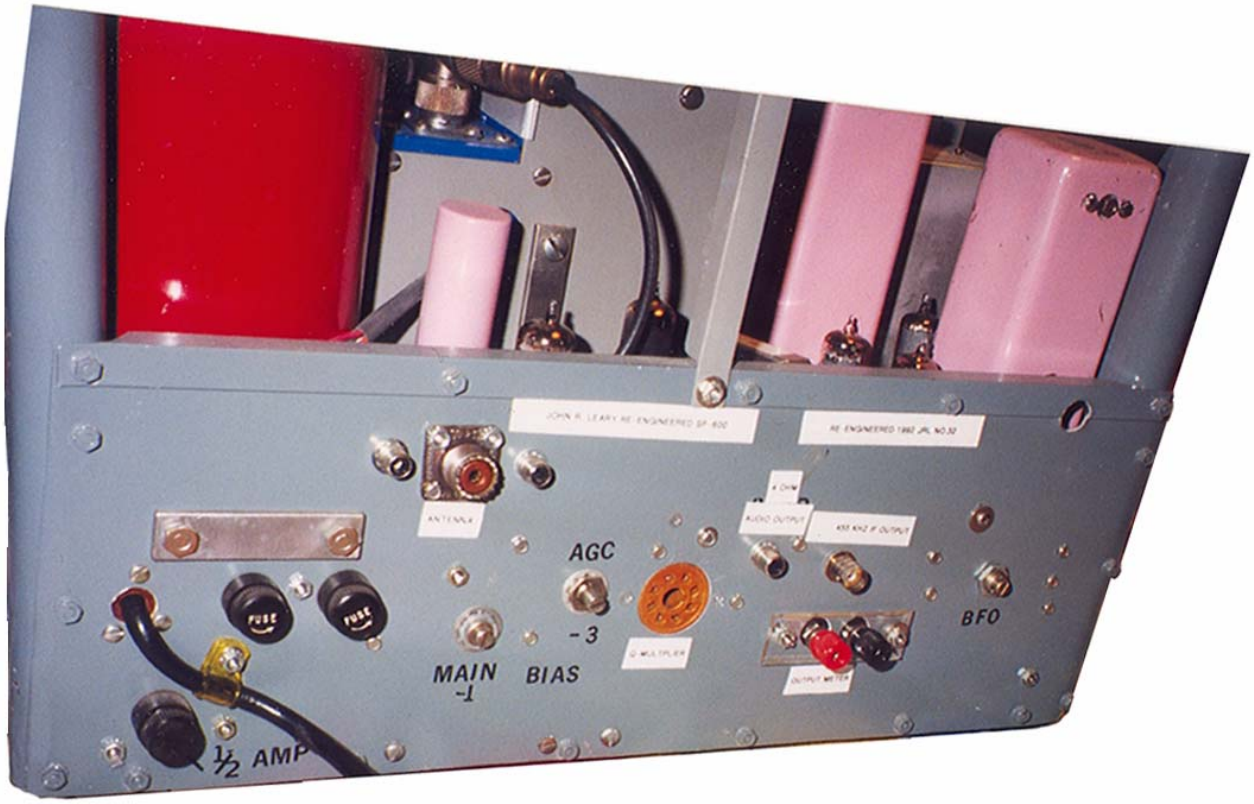

Rear view of Version Number 32

Circuits Used in the SP 600 Conversions

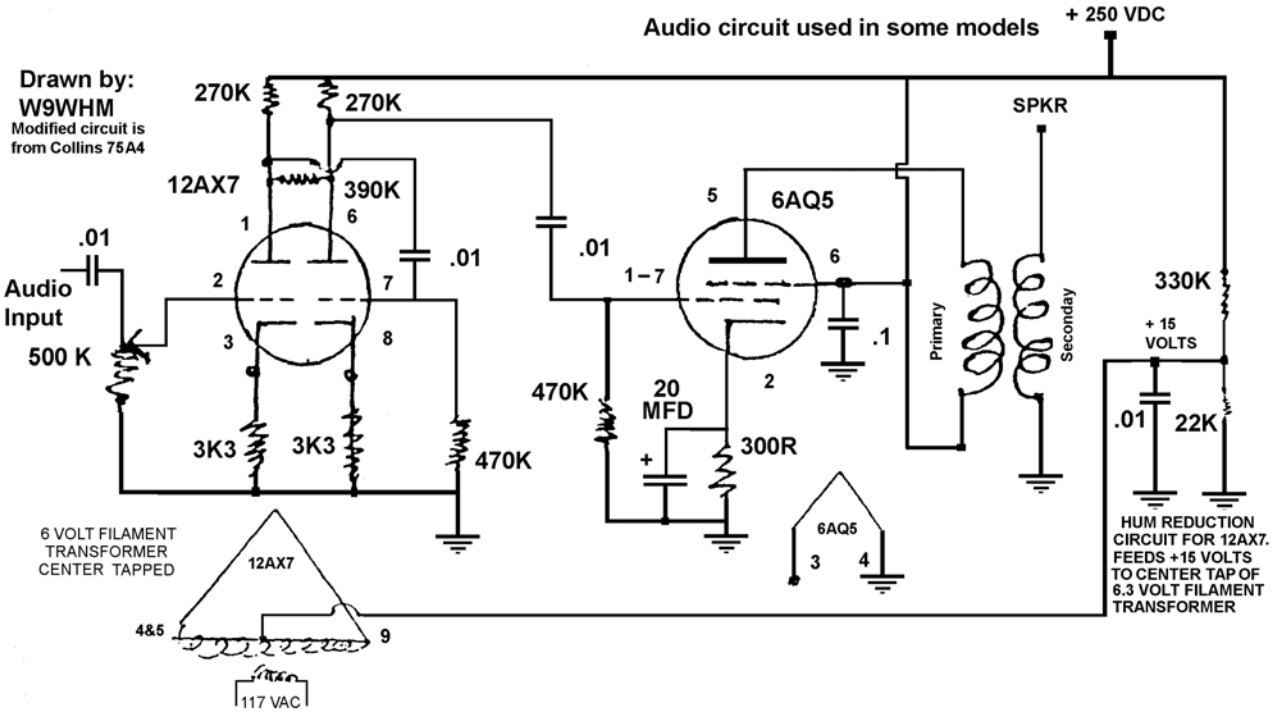

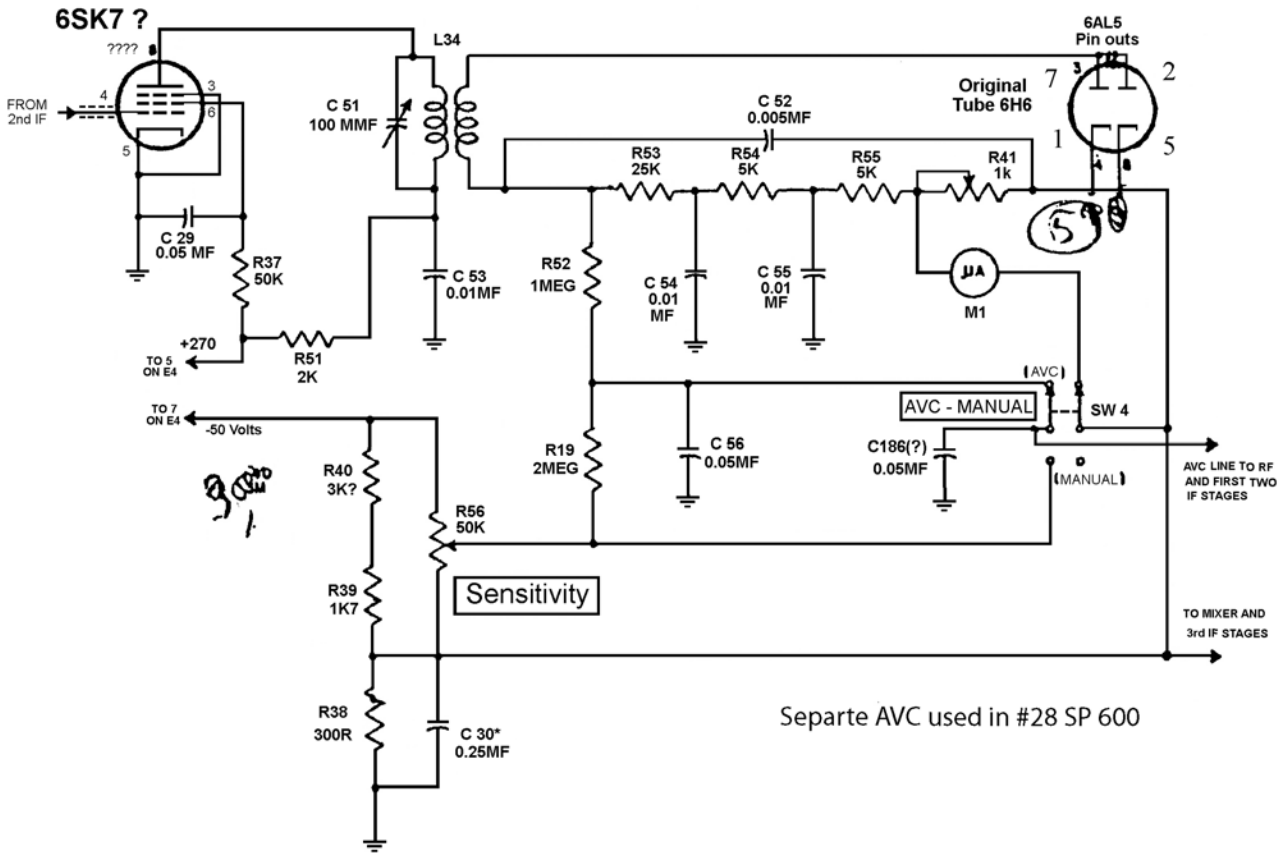

Source of this circuit is unknown. Hand annotation by R40 was not explained either.

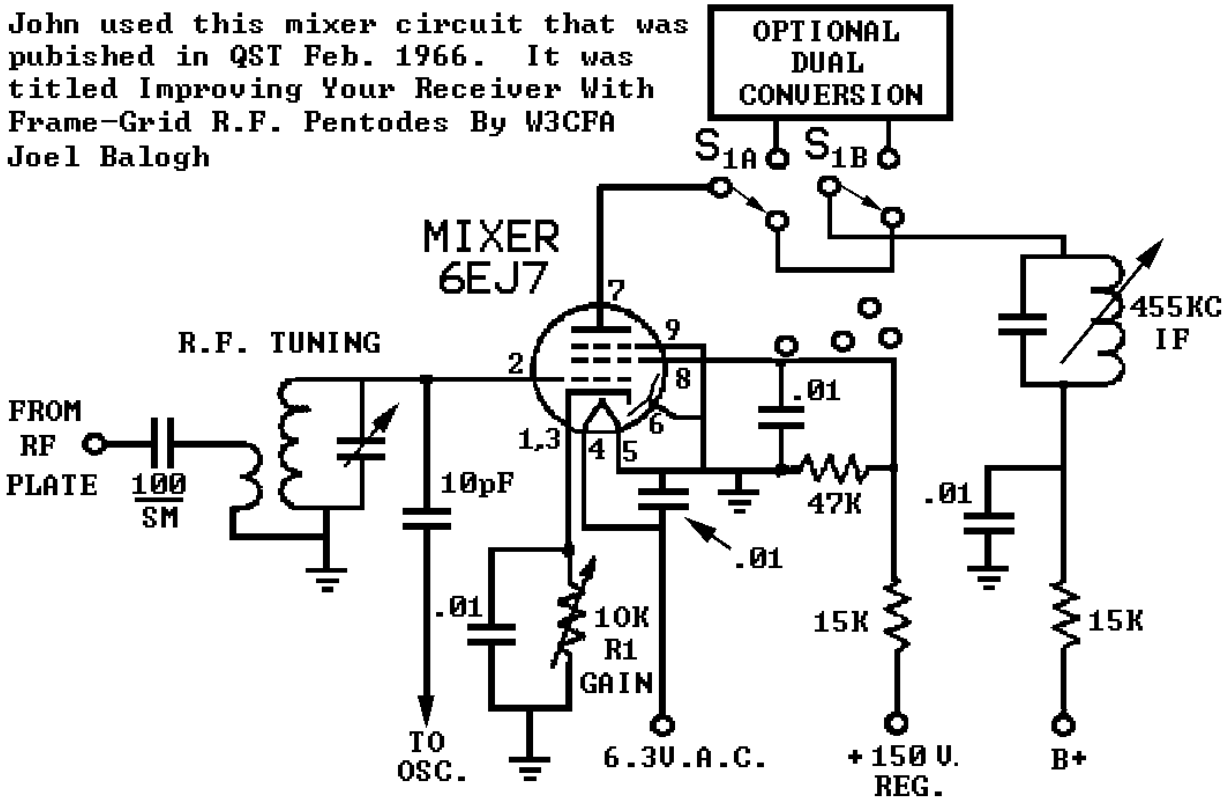

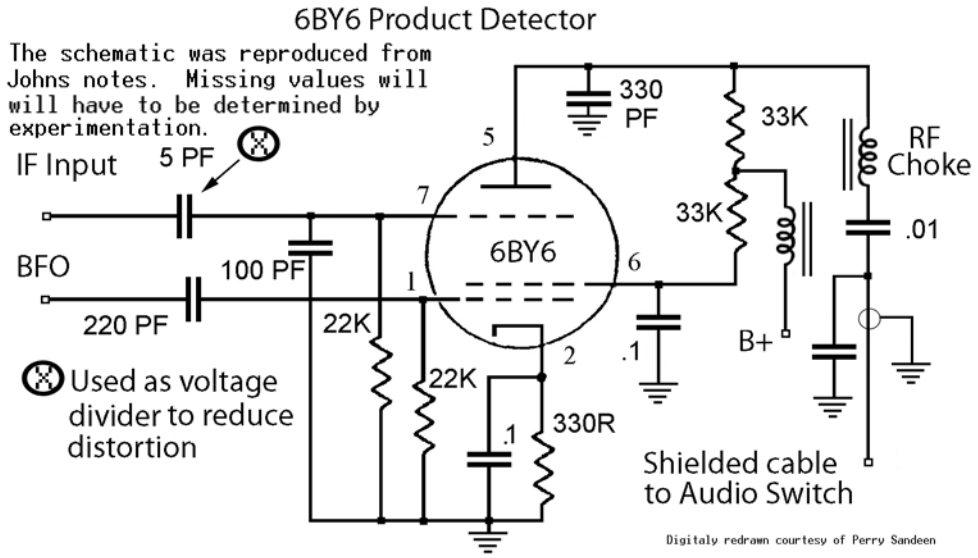

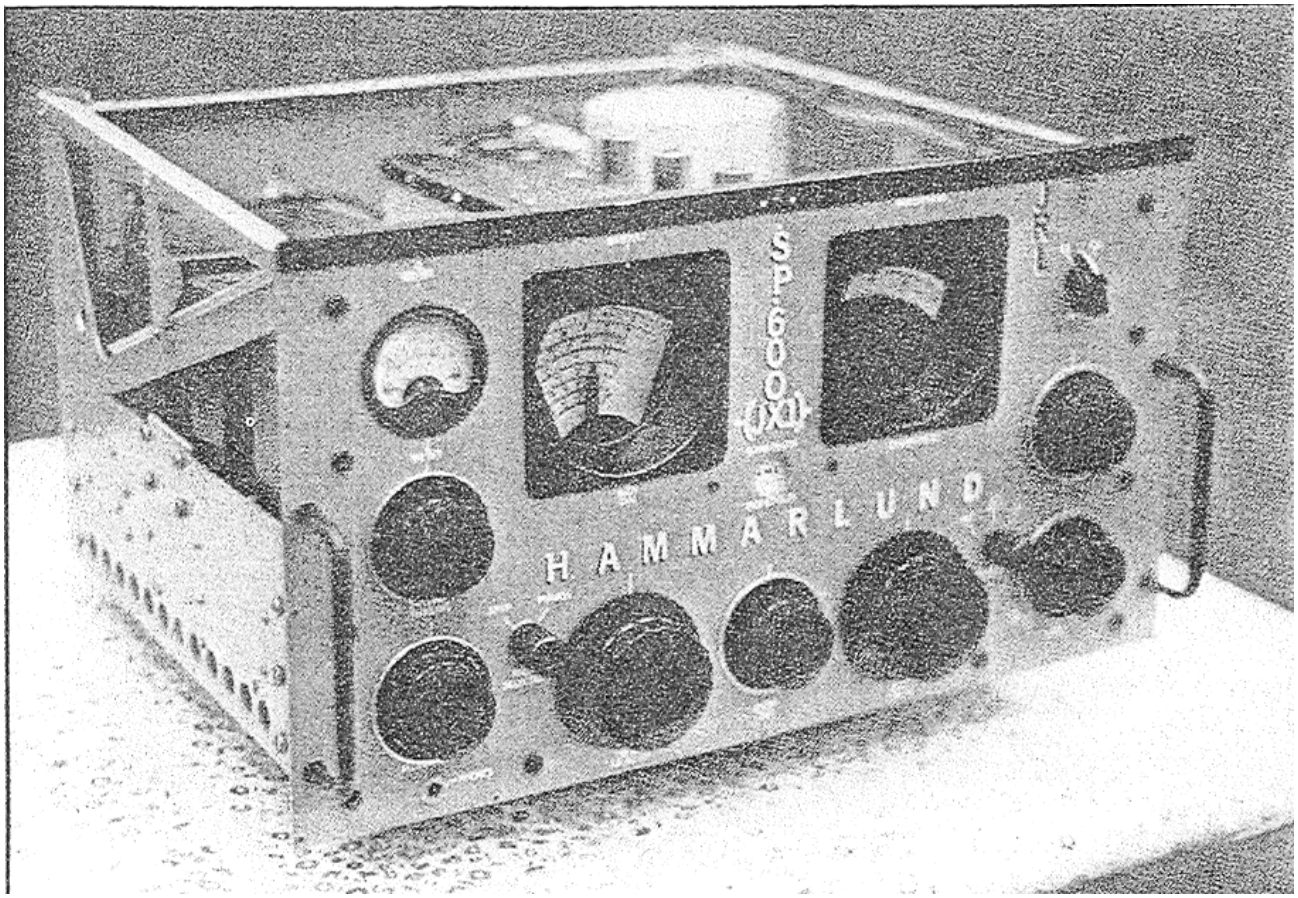

A restored – to - new condition SP 600 as pictured in CQ November 1992. John said the additional bracing provided additional frequency stability.

Tube Substitution

BOATANCHORS Digest 3532

by "RJ Mattson" <rjmattson@hvi.net> Date: Tue, 26 Aug 2003 17:12:14 CDT

To: Old Tube Radios <boatanchors@theporch.com> Date: Sun, 24 Aug 2003 06:41:30 -0700
Subject: Re: question about Hollow State Newsletter article

Hi Joe;

.....My understanding is that the author of that article later wrote that it degraded cross-modulation and advised against doing it.

I have two 51J's that I haven't messed with yet and I've wondered about the front end, its design for whip antenna use and its sharp cutoff pentode RF amp. Seems there's lots to do to make the front end right for a decent dipole or long wire antenna including changing to a remote cutoff tube. I'd like to know more about what people think about this subject.

Arden Allen KB6NAX

From: Heinz und Hannelore Breuer <hbreuer@debitel.net> Date: Sun, 24 Aug 2003 16:27:54 +0200
Subject: Re: question about Hollow State Newsletter article

Hi Joe,

I can fax HSN #26 to you if you have not received it yet. Please give me your fax number and I get it on the way.

73 Heinz DH2FA, KM5VT

From: Liles and Naomi Garcia <landn@easystreet.com> Date: Sun, 24 Aug 2003 14:12:52 -0700
Subject: Receiver Front End Information

Good afternoon Arden and Boatanchors Group,

I will only scratch the technical surface on this communications receiver front end discussion, but here is a start. The 51J series of receivers have the 6AK5 sharp cutoff pentode for their first RF amplifier. The Hammarlund SP600's have a 6BA6 remote cutoff pentode for their first RF amplifier. Hallicrafters used the 6DC6 sharp cutoff pentode for the front end of several of their receivers. (I think that 6DC6's are hard to get, maybe someone can check this fact for us.)

In the past years there has been discussion about replacing the 6BA6 in the front end of the SP600 with the 6BZ6 semi-remote cutoff pentode. This replacement improved the SP600's performance in some areas, and was just a plug-and-play replacement. Perhaps the 51J series could benefit from this replacement also. Here is where my information falls short--I do not remember where this replacement discussion is located in written form that would have all of the details and technical information. Perhaps some of you Hammarlund experts could help out here.

Does this 6BZ6 replacement bring back any memories?? Everybody have a great rest of the weekend.

Liles Garcia

To: Old Tube Radios <boatanchors@theporch.com> Date: Sun, 24 Aug 2003 21:55:54 GMT
Subject: Re: Receiver Front End Information

Hi,

Allow me to offer a correction to Liles Garcia's posting. He stated that the 6DC6 was a sharp cutoff tube. It is a semi-remote cutoff tube, and was used as the rf amplifier in the Collins 51S-1 receiver.

Perhaps Liles was thinking of the 6CB6, which is a sharp cutoff tube.

As long as we are talking about front end modifications, has anyone ever used a "Nuvista plug?" It was a plug-in assembly to replace the common 7 pin rf amplifier tubes with a pair of nuvistors in a cascode amplifier circuit.

The Hammarlund engineers tried a Nuvista plug in a SP-600 and liked it very much. See Tech Bulleting 107: http://www.hammarlund.info/info/sp-600/

I remember seeing an ad for the "Nuvista plug" in CQ magazine in the early 60's, but I never heard of anyone using it, until I saw the Hammarlund Historian's web site.

73, Ed k4pf@juno.com

From: "Arden Allen" <gumbear@pacbell.net> Date: Sun, 24 Aug 2003 15:00:01 -0700
Subject: Re: Receiver Front End Information

Hi Liles;

I will only scratch the technical surface on this communications receiver front end discussion, but here is a start. .....

Glad you mentioned those two tubes. The 6DC6 is also a semi-remote cutoff job (used in Collins S line receivers) if I remember correctly. I ran a 6BZ6 in my SP600 for a while and it improved S+N/N sensitivity by 6 DB which, if you think about it, isn't much of an improvement. Worse, the S meter scale gets cramped instead of having more of a logarithmic response over the full scale. The so-called remote cutoff types act more like sharp cutoff types in such an AGC system. One should compare plate curves to see the difference.

Arden Allen KB6NAX

From: WA5CAB@cs.com Date: Sun, 24 Aug 2003 18:41:23 EDT
Subject: FS: 51J-4 Manual Repro (was Receiver Front End Information

Group,

This thread reminds me that several years ago, someone twisted my arm and I made several repro's of the Collins 51J-4 manual. And then of course it was like the Bendix TA-12 plug inserts that I had made. The twister turned out to be the only one for many years who needed one. :-) Anyway, I still have several of the manuals, complete cover to cover, GBC bound, $20.00 plus postage. They are a copy of an original Collins IB 520 5014 00.

73 Robert Downs - Houston

From: Al Klase <skywaves@bw.webex.net> Date: Sun, 24 Aug 2003 20:44:14 -0400
Subject: Re: Receiver Front End Information

Anchorites,

I've owned two of these receivers, a J-2 that's been passed along and a J-4 that's still here. I'm convinced Collins chose the 6AK5 for the RF amp to achieve the best front-end noise figure possible at the that time. (1948-49ish) There is definitely a problem with front-end overload when connected to a large antenna and receiving strong signals, such as 49-meter broadcasts.

Now, the low noise figure is only important on the higher frequencies where things are quieter. For our purposes it might only matter on 15 and 10 meters.

A proper remote-cutoff tube, like a 6BA6 is definitely a plus on 40 and 80M. Remote-cutoff tubes, allow the gain of a stage to be turned down, by increasing the grid bias, without causing the major amounts of distortion that occur when you try this with a sharp-cutoff device. The 6BZ6 (semi-remote cutoff) is a good compromise, and seems to work OK as a plug-and-play replacement.

If one really wanted to hot rod a receiver of this sort, he'd check out the 6EH7. This is a much later "frame-grid" design, and probably one of the best tubes ever. Unfortunately it's a 9-pin device. Of course, then, you'd start casting a jaundiced eye in the direction of the two 6BE6 mixers, and the whole thing would get out of control. AVOID CREEPING ELEGANCE! Plug in a 6BA6 or 6BZ6 and relax.

There is another problem lurking here. The original receivers, up to the 51J-2, had primary windings on the RF coils to accommodate standard low-Z feedlines. However, starting with the R-388 (51J-3), they dispensed with the primaries and cap coupled to the top of the tuned circuit to get better performance with a short (15 ft.?) whip.

I think there was a article, perhaps in Electric Radio, that told how to reinstall the primary windings.

My two cents, Al Klase - N3FRQ

From: Morris Odell <morriso@vifm.org> Date: Mon, 25 Aug 2003 13:02:24 +1000
Subject: RE: Receiver Front End Information

Hi all,

If one really wanted to hot rod a receiver of this sort, he'd check out the 6EH7. This is a much later "frame-grid" design, and probably one of the best tubes ever. Unfortunately it's a 9-pin device.

I think the 6GM6 is a close 7 pin equivalent to the 6EH7. I have one in the front end of my R390A and it works pretty nicely there - unfortunately the operating conditions are a little different to the 6DC6 so it's not plug & play. You need to pull the RF deck and change a few resistors.

my 0.02 worth73 de Morris VK3DOC

From: "Dan Martin" <dmartin@visuallink.com Date: Mon, 25 Aug 2003 18:07:19 -0400
Subject: Re: question about Hollow State Newsletter article

My quick comment is that I seem to recall an article in Electric Radio a couple of years back that spoke to Arden's very question - some simple (as I recall) front-end 51J mods to better serve the typical dipole. I shall check around and refresh my memory and join the fray.

Dan WB4GRA

From: "RJ Mattson" <rjmattson@hvi.net> Date: Mon, 25 Aug 2003 22:14:29 -0400
Subject: Re: question about Hollow State Newsletter article

Sounds like a great newsletter. Is there a compendium of past issues available? Is there a web site e-mail address to subscribe? bob...w2ami

An Experimental SP 600 SS Delayed B+ Power Supply

Copyright© 2009 by Perry Sandeen. All commercial rights reserved.

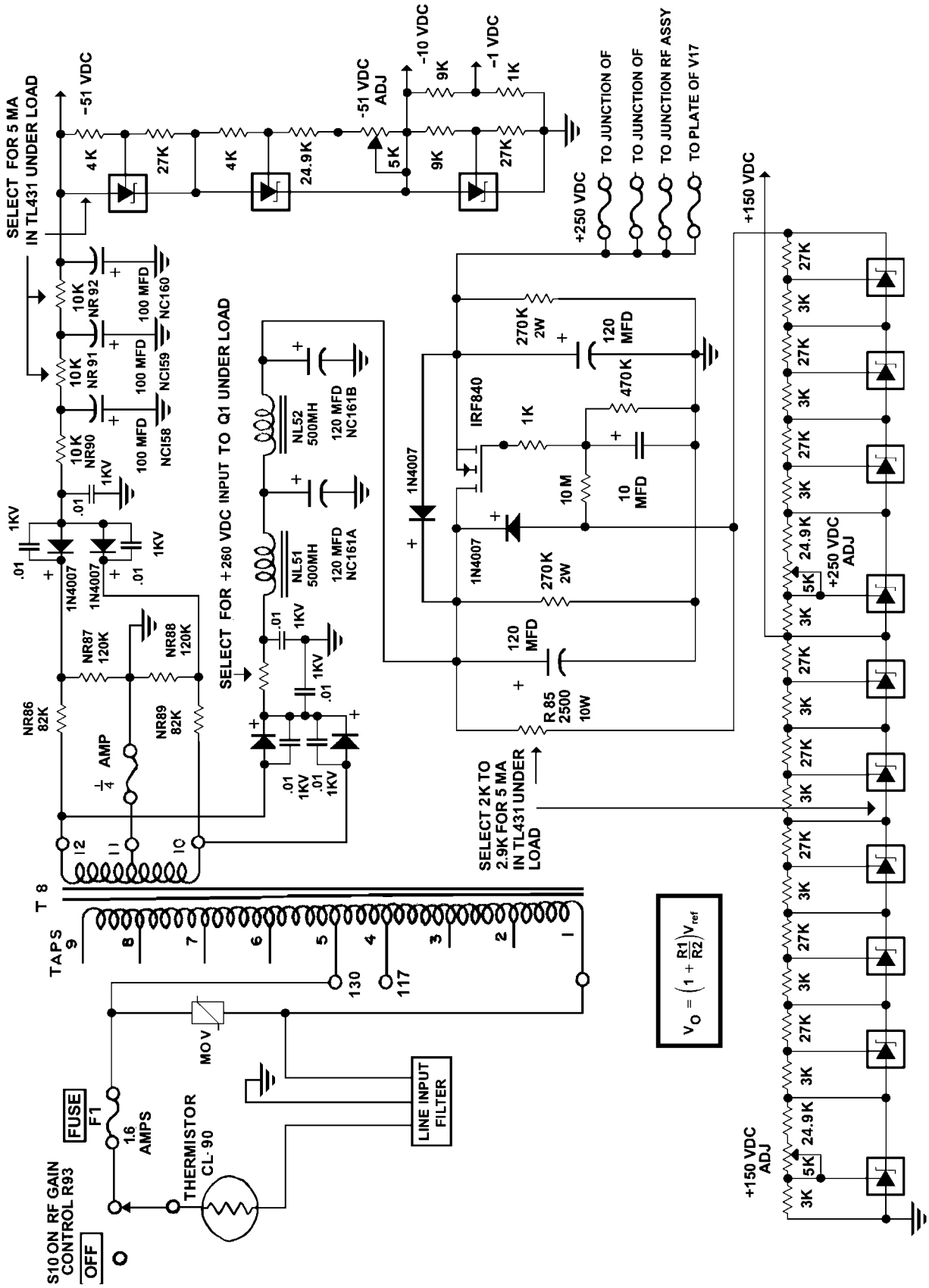

I live in a rural mountainous area at 8,900 ft. We have buried power lines that pick up lightning strikes nicely. Also the line voltage is generally 124 volts. We frequently have fraction of a second dropouts. In a nutshell: lousy power for electronic equipment.

I bought a SP 600 on eBay and when it arrived I noticed that the original filter chokes were removed and substituted with much smaller units with no identification, Querying the Ham who sold it to me about the values he replied "that the inductance was sufficient". Also both 6AL5's as well as the 5R4 were replaced with 1N4007 diodes, I moved the line input tap to the 130 volt setting and the radio worked so-so with a 30 ft. antenna.

At this time I came across a solid state electronically regulated power supply in Audio Express magazine using series zener diodes for its reference source. The limitation of this circuit was that it was not adjustable and one had the problem of zener drift. Previously on the R390 Reflector list Dr. Jerry Johnson had made reference to the Texas Instruments TL 431 programmable shunt regulator. For practical purposes it is an amplified "buried zener" on steroids that can sink 200 Ma, the same as an 0A2.

I joined the two circuits using the TI data sheet obtained on the web. The programming formula is shown on the schematic, My main addition is the considerable size increases of the filter capacitors due my particular power line situation. You made not need that much but excellent Nicicom electrolytics are cheap.

Although designed for a SP 600 the design is scaleable to any other tube receiver. I chose conservative 25 volt "blocks" for my design although the upper limit is 36 volts. As the SP 600 uses a minus 1 volt for one of its bias voltages and the minimum programmable voltage is 2.5 volts, a voltage divider is required of off the minus 10 volt bias line. Any B+ value can be selected by using fixed blocks and one variable.

Normally the SP 600 is a capacitive input filter but the previous owner made it a choke input due to the SS rectifier. More on this later.

Circuit explanation

The heart of the supply is the TL 431 regulators. Set up in series blocks they feed the MOSFET source follower through a 10 Meg and 10 Mfd time constant to give a delayed B+. The filter capacitor values are not critical and based on what I had on hand. Any voltage rating 1 Kv over the B+ diode output should be fine. Bleeder resistors were added to all capacitors for safety. "Flameproof" metal oxide or WW types are recommended, .01 1Kv disc capacitors on all the rectifier diodes are for RFI suppression.

The input circuit compared to the original wiring was completely re-configured. Besides 3 wire polarization it is now routed so that there is no power to any of the transformer components until the power switch is turned on. A Corcom line filter replaces what is usually C152 & C168 bypass caps used on the line input. A MOV is used to suppress input spikes while the CL-90 does double duty by in-rush current limiting and preventing the large value of capacitance from blowing the fuses. The CL-90 Needs to be mounted in a location where its heat won't cause a problem. It has to be warm to work properly. Each lead should be crimped, not soldered to the line leads.

I have not built this circuit at this time but the math comes from the TI data sheet.

Hammarlund SP-600 Dial & Gear Train Alignment

FROM THE HAMMARLUND HISTORIAN

This section is provided thru the graciousness of Andy Moorer, and is used here with his permission.

OK - here's the deal - throw out all the instructions. It is simpler than it seems.

Manually rotate the shafts until you are at the lowest possible frequency. That will be when the vanes of the main tuning capacitor are fully enmeshed - that is, you can't get the moveable vanes any further into the static vanes. The little rotating brass piece that has the stop peg has to be up against the stop that is on the right-most brass gear. You have to fiddle with the gears until these things happen at the same time - capacitor fully closed and the rotating peg against the stop. If you are really adventurous, you can check it by winding all the way to the other extreme - the high-frequency stop should be when the capacitor is fully open.

Note that it won't want to stay there. Here is where it takes 3 hands. Rotate it back to the low-frequency position, against the stop, capacitor fully closed. At this point, the fiducial (the little black pointer up top that bolts onto the faceplate on two hex spacers) and the frequency disc should be positioned so that it points right to a little mark on the disc to the left of the lowest frequency. Note that BOTH the disc and the fiducial (pointer) have some freedom and can be moved around some amount. Put the disc on with the screws loose - put the fiducial on with the screws loose. Holding the peg up against the stop, move each around to align them.

Note that you might not be able to align them - that is, there may not be enough motion on the tuning disc. If this happens, you have to re-fiddle the gears. It means that the hub that the tuning disc bolts to needs to be rotated. You have to disengage it from the other gears and move it around a bit. Then go back to the beginning and get the stop, the capacitor, and the tuning disc and the fiducial all in the right place at the same time. After the third try or so, have a beer and come back tomorrow. It will go together the first time tomorrow. The vernier (the right-hand disc) lines up with its fiducial at zero at this same alignment position. The vernier dial doesn't have a special alignment mark - you just position it to zero when the tuning dial is at its alignment mark. Since that is the one with the stop on it, you generally don't have any problem with the hub being in the wrong position. Note that you have a fair amount of flexibility as to when the capacitor is fully "closed." That is, it doesn't have to be really, really closed. You are going to follow this whole thing with an alignment, which will adapt the rest of the receiver to whatever you end up with as the low-frequency position. It is more important to get the dial alignment mark to line up with the fiducial at the place the stop engages. That is, you don't want the operator to be able to tune lower than the alignment mark. If it does, you might not be able to get the high frequencies to align properly.

Hope this helps. The instructions are often more confusing than helpful. If you get the disc, the stop, and the capacitor to all end up in the right place, then the radio can be aligned and everything will be wonderful. All other considerations are secondary.

James A. (Andy) Moorer
www.jamminpower.com

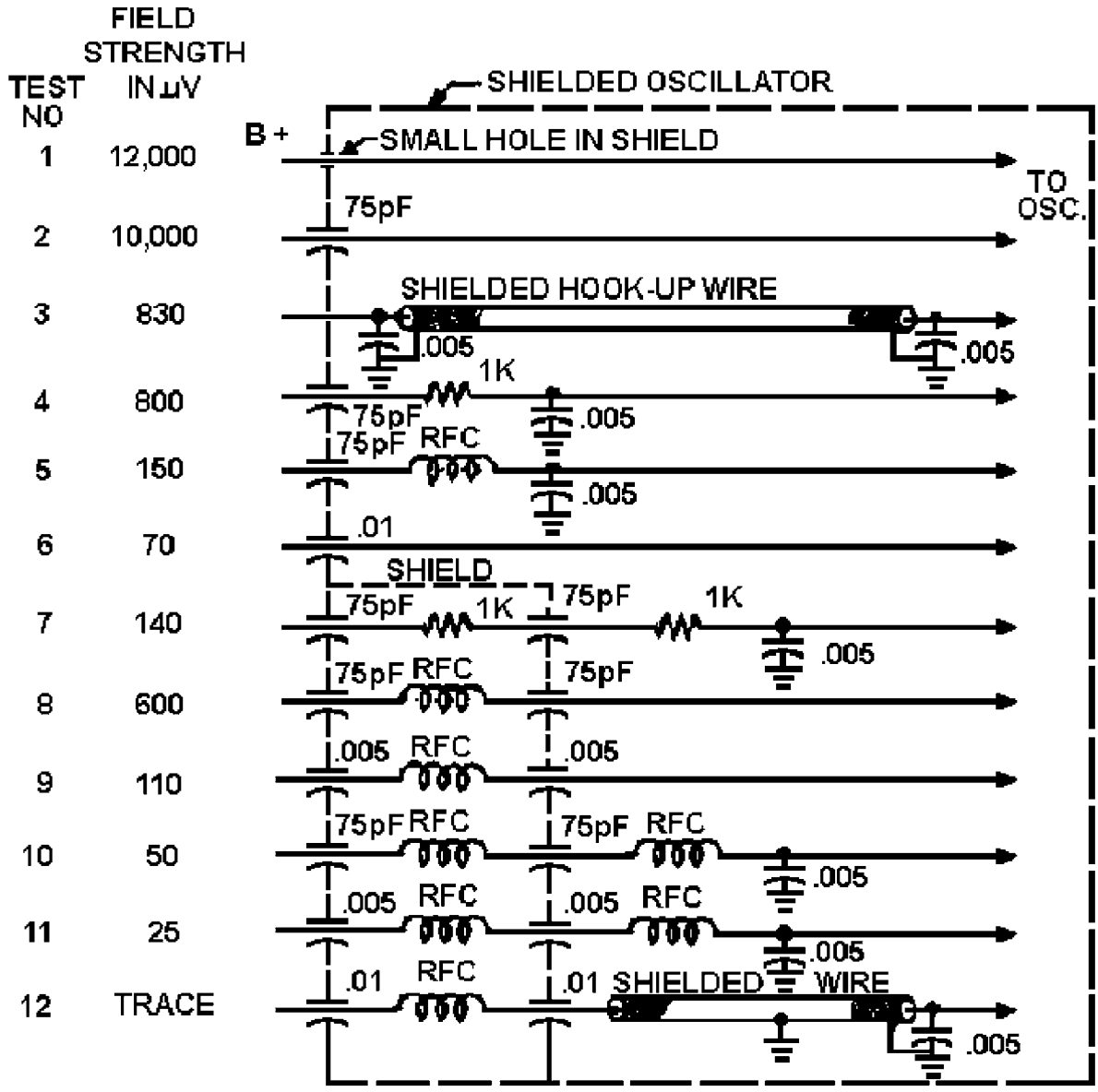

PARTS USED

1K CARBON RESISTER
RFC - OHMITE Z-50 (7 µHy)
75 uuF CERAMIC FEED - THROUGH
.005 DISK CERAMIC
.01 SPRAGUE HI- PASS
.005 CERAMIC FEED - THROUGH

LEAD LEAKAGE WITH VARIOUS LEAD FILTERING SYSTEMS
(COURTESY W1DBM)

Original drawing courtesy Roy Morgan Digital remanufactioring courtesy Perry Sandeen

A Medium Wave Audio Processor

by Bruce Carter, Texas Instruments Applications

Introduction

AM radio has long been the domain of talk radio and sports broadcasts. Many people seldom change to "the other band" on their radio unless it is to hear their favorite team play, to hear a talk show, or to get the news. Before FM became widely available, AM was the primary radio band used for music. Throughout much of the third world, this is still the case. Vast distances between cities make it impractical to use FM as a broadcast band for small, isolated groups of listeners

Many attempts have been made through the years to revive the AM band. Most recently, the FCC extended the band to 1700 kHz in an attempt to alleviate some of the nighttime clutter. In the late 1970's and early 1980's, the FCC attempted to revive interest in the band by approving several standards for stereo broadcasting. AM stereo never caught on with the public, due to the reluctance on the part of the commission to select a standard, combined with the growing popularity of talk radio and a proliferation of FM music stations.

Ironically - the rebirth of the AM band is happening due to a seeming unrelated event, the passage of the Telecommunications Act of 1996. This act has led to wholesale consolidation of radio station ownership. The large radio corporations program a bland mixture of rock, country, and talk stations in every city, and have disenfranchised many niche format fans. Niche formats are forced off the air, to streaming internet audio, or onto the AM band.

As more and more specialized music ends up on the AM band, there is renewed demand for improved AM receivers. Unfortunately, there are some disadvantages to AM:

High frequency interference is a problem at night. AM frequency response is not limited (unlike FM, which is severely rolled off above 15 kHz). Even though AM stations are allocated on 10 kHz channels, the FCC does not require that the audio frequency response be limited to less than 10 kHz. High frequency response can extend to 20 kHz or even beyond. At night, however, distant stations will be present on adjacent frequencies, and audio from those stations will mix with the high frequency audio, producing noise.

The 10 kHz spacing of AM stations causes another problem. The channel spacing is close enough that the carrier frequencies from adjacent channels are audible. These carriers produce audible tones in the audio - 10 kHz in North America, and 9 kHz in Europe and much of the rest of the world. Because AM propagates much farther at night, the problem becomes worse. In almost every case, there will be a carrier below and above the desired station. Not only will both carriers contribute to a 10 kHz whistle, but they will be at slightly different frequencies. The FCC allows AM stations to deviate (20 Hz from their assigned frequency, so the two carriers will mix together, creating an even more annoying warbling 10 kHz whistle tone.

When the carriers from adjacent stations mentioned above mix together, they create sum and difference frequencies. The sum frequencies are above the range of human hearing, and not of concern. The difference frequencies, however, are a concern. Each individual carrier can be (20 Hz from the assigned frequency. This means that their difference frequency can vary from 0 to 40 Hz (If one is 20 Hz low and the other is 20 Hz high). This difference frequency will show up in the received audio, and may be quite annoying through a subwoofer.

The Motorola C-Quam system has become the worldwide standard for AM / Medium Wave stereo transmission. Unfortunately for stations that broadcast music, C-Quam utilizes a 25 Hz pilot tone in the audio from the phase of the carrier that carries the difference (L-R) modulation. This 25 Hz pilot, unlike the pilot used for FM stereo, is not used in the demultiplexing process. It is only there to identify the station as an AM stereo station (to light the stereo light).

Whistle Filter

Because it is low in frequency, it may take longer for the pilot detection circuitry to light the light than it does for the decode circuitry to operate - so the listener is likely to hear stereo separation before the light turns on. The stereo pilot will appear in both channels of the received audio. Unfortunately, this stereo pilot will make low bass un-listenable on AM Stereo stations. The pilot will also beat with any carrier difference frequency, creating even more low-frequency tones.

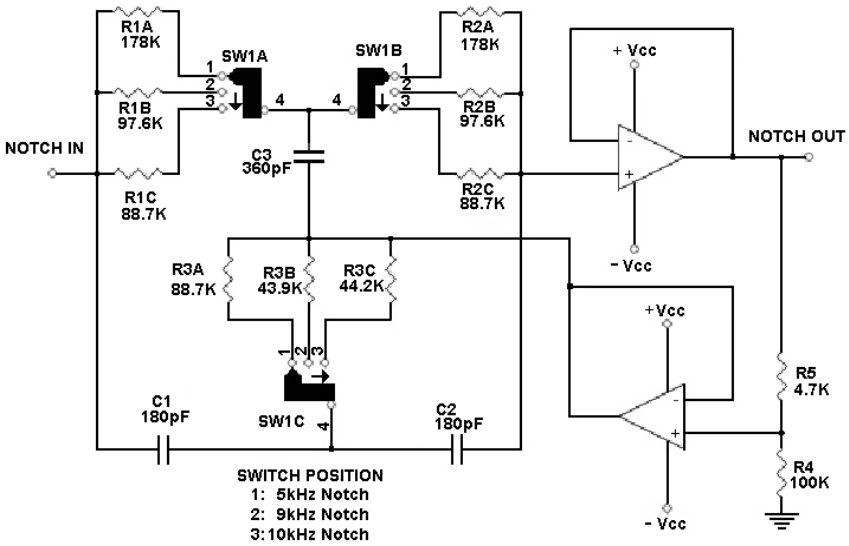

The schematic above is the notch filter section of the AM signal processor. It is extremely difficult to form a high Q notch filter at high audio frequencies. The Twin T notch configuration was chosen because it is unity gain, and relatively easy to tune. All passive components should be 1% except for R11 through R14, which can be 5%. The depth of the notch depends to a large extent on the matching of the components. C3 should be formed from placing two 120 pF in parallel. Care should be taken that these capacitors should be taken from the same batch. Similarly, R1 and R4 should be from the same batch, as should R2 and R5, and R3 and R6.

There are areas of the world where both 10kHz and 9kHz stations are receivable. In these areas, virtually any frequency from 1 kHz to 20 kHz is possible. It would be difficult to design a filter to reject all of these frequencies. In the unlikely event that a particular frequency is objectionable, this design can be modified to reject it: the center frequency of the notch is 1/2pR1C1. R2 = R1, C2 = C1. C3 is twice C1, R3 is one half R1. If there are more than one tone in the audio, two or more notch stages can be cascaded to eliminate them. Sections of the filter can be eliminated. A North American listener can eliminate the 9 kHz notch. The 5 kHz notch can be eliminated for listeners that do not care about shortwave.

Low Pass Filter

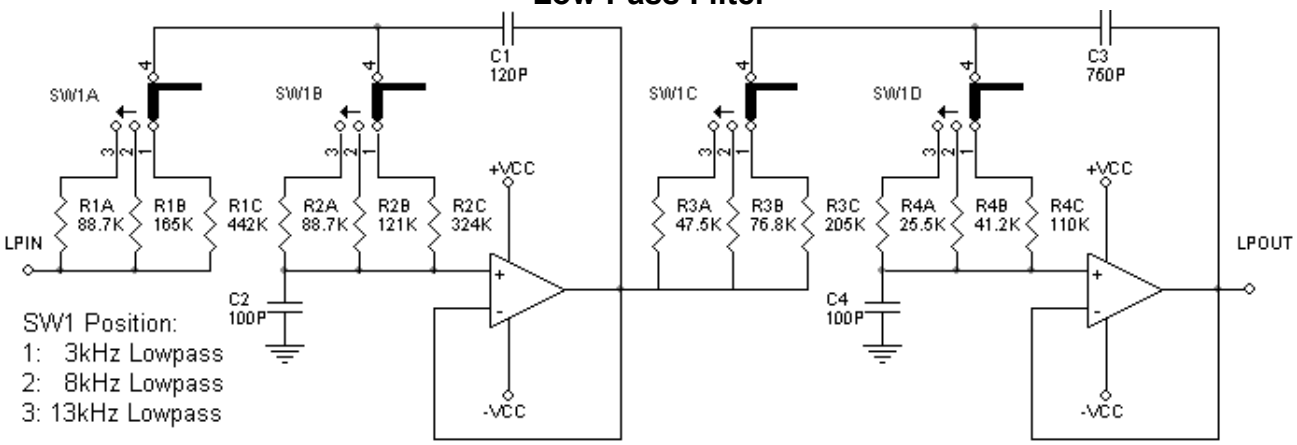

Each op-amp is configured as a Sallen-Key low pass filter. Stage 1 has a Bessel characteristic, and stage 2 has a Chebyshev characteristic. The combination of the two form a Butterworth filter with a roll-off of 0.5 dB at the indicated frequencies. The three frequencies selected - 13 kHz, 8 kHz, and 3 kHz are selected to match the settings on a Hammarlund SP-600JX receiver - which the author uses for Medium wave and shortwave listening.

Rumble (High Pass) Filter

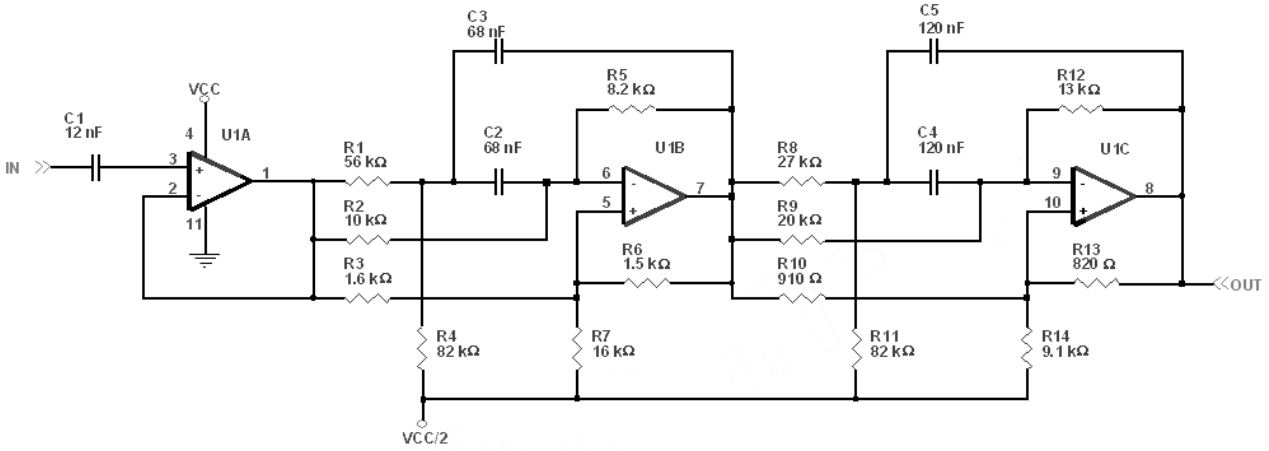

The rumble filter above has been designed to reject audio below 50 Hz. It is a 5 pole elliptical filter with no more than a couple of dB ripple. Since the ripple occurs in the low bass end of the response, it should be inaudible.

Response

This audio processor has several switches to enable and disable functions as needed. The response below has the rumble filter enabled, with the 13 kHz, 8 kHz, and 3 kHz low pass filter progressively each separately enabled. The "flat" position is not shown. The notch filter is disabled in the first response curve, and enabled in the second. 9 kHz and 5 kHz notch response is not shown, but will produce similar results.

The action of the notch makes the 13 and 8 kHz settings of the low pass filter almost identical, except for a small band of high frequencies above 10 kHz. The 10 kHz notch is not needed for the 3 kHz low pass filter. Even without it, 10 kHz is attenuated more than 30 dB.

A Simpler Alternative

There is an alternative to the audio processor above. All of the undesirable audio components can be eliminated in a single filter, if high frequency audio (above 10 kHz) can be sacrificed. The audio processor shown below is a 5 pole 50 Hz high pass elliptical filter with 0.5 dB ripple, followed by a 5 pole 8 kHz elliptical low pass filter with 1 dB of ripple. It has over 40 dB of rejection below 40 Hz and above 10 kHz.

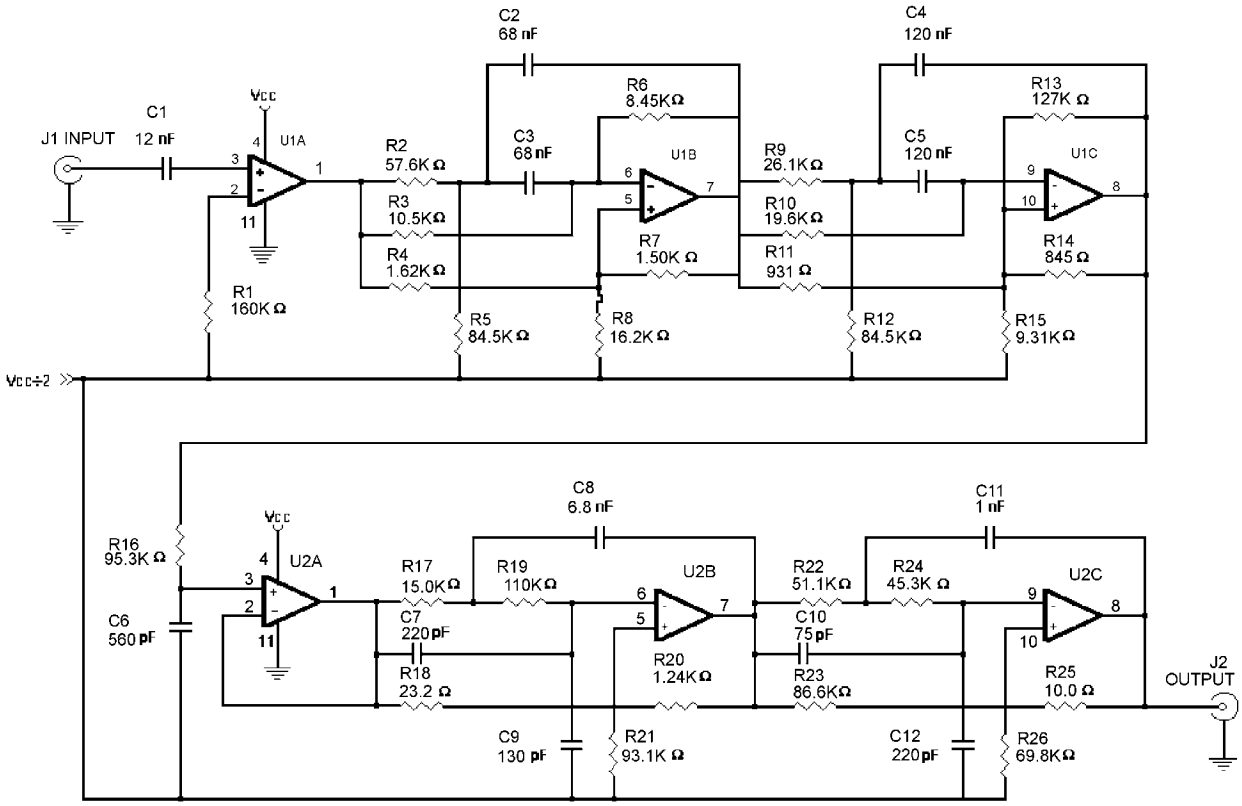

Two of these filters should be constructed for AM stereo. If monaural reception is all that is desired, only one filter is required. Component values are critical. There is no way to convert to 5% resistor values, 1% are absolutely required. If 5% are used, filter characteristics will degrade badly. The response of the filter is:

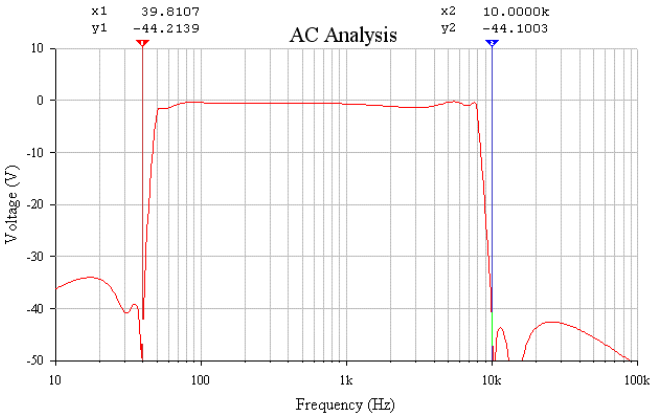

The high pass filter will remove the pilot difference frequencies as well as the stereo pilot, while allowing bass frequencies of 50 Hz and above to pass unaltered. Because FM radio also rolls off below 50 Hz, the listener should not notice any difference between AM and FM in bass response. High frequency noise and the 10 kHz pilot tones are removed by the low pass filter. This filter also limits the high frequency response of the AM audio to 8 kHz, so the listener may notice a difference compared to FM.

Because high frequency noise only occurs on distant stations in the daytime - the listener should be able to listen to local AM stations with the filter section switched out the circuit.
The circuit above is the rest of the circuit, showing the power supply, the creation of Vcc/2 (U1D), and the bypass switch. If monaural reception is all that is desired, only one set of input / output connectors are needed, and SW2 can be a SPDT.

MOSFET 6V6 or 6AQ5

Adapted from Electronics World

Unable to find a replacement 6V6 audio power valve for his radio, Dave Allen set about making a MOSFET substitute which, he says, works better than the valve it replaced. Here's how he did it...

After giving me many years of good service, my faithful Murphy wireless recently fell silent. This was due to a failed 6V6 audio output valve.

The valve's demise was caused by the coupling capacitor feeding its input grid on pin 5 going short circuit. This resulted in a positive voltage being applied to the valve's grid, which in turn caused excessive current between the anode and cathode.

Apart from the dead valve and capacitor, the rest of the radio was in good order. Replacing the 0.luF/400V coupling capacitor was easy but finding a replacement valve was not. In view of this. I devised a direct plug-in replacement for the valve based on an IRFI830G high-voltage MOSFET **(now only widely available, but still cheap, as a IRFI830GPBF [RHOS**])- of which I had plenty.

In addition to the FET, all that was needed were a few peripheral components and the valve base from the dud valve.

Can this technique be applied to other valves?
It should be possible to build similar plug-in modules to valves other than the 6V6, like the 6PI or KT61. This assumes that you can find information on the pin connections for the valve you want to replace, and that you have a suitable spare base to hand.

Such plug-in modules can directly replace a variety of octal-based output valves that are wired in a parallel heater chain without further modification to the original equipment.

Details for the 6V6

Connections for the 6V6 valve are shown in Table 1. Figure 1 shows a typical single. ended Class-A output stage using a 6V6 tetrode or similar valve, incorporating cathode bias.

In Fig. 2 is the output stage - minus valve - and the relevant connections shown for use with the plug.- in module.

Figure 3 shows the circuit for the plugin replacement module.

Table 1. Pin connections for the 6V6 tetrode

Pin	Description
1	No connection. This pin may be connected to the suppressor grid, 93, on certain pentode valves and can be ignored.
2	Heater
3	Anode
4	Screen grid (g2)
5	Input grid (g1)
6	No connection
7	Heater
8	Cathode

The circuit
The circuit is based on an IRFI830G MOSFET (now **IRFI830GPBF)** wired as a triode. In this application, no screen grid connections to the valve base holder are involved.

For the MOSFET to operate as an amplifier it has to be biased into conduction. This is achieved by applying a small positive bias to its gate. Bias voltage for the FET is derived from a potential divider fed from the HT rail.

It consists of R1, R2, and VR1 (consisting of 100K trimpot and 120K fixed resistor). R1 also serves as a current Limit for the MOSFET and as a convenient test point for voltage monitoring when setting up the plug-in module.

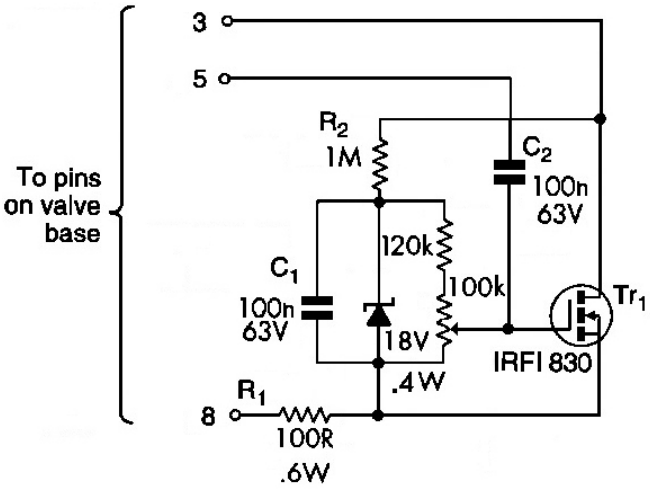

Zener diode D1, keeps the gate voltage stable, enabling the module to be used in a variety of receivers with differing m voltages. Decoupling capacitor C1 connected across VR1, helps prevent any noise from the power supply entering the sensitive gate input of the MOSFET.

Capacitor C2 provides input coupling for the module and is fed from an earlier audio stage in the receiver.

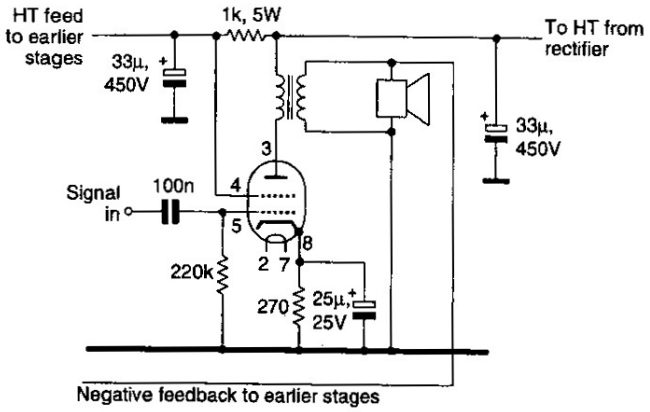

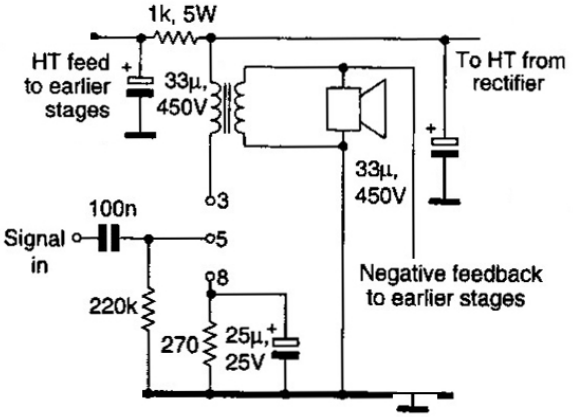

Fig. 1. Original valve audio power output stage.

Implementing the valve substitute

A good starting point is the preparation of the valve base. Wearing safety goggles and gloves to protect you against cuts from broken glass is a good idea when reclaiming the valve base.
The best way to break the glass envelope is to p1ace the dud valve in a thick plastic bag and tap the glass with a small hammer. Then carefully remove the shattered remains from the base. Remnants of wire in the valve base pins can now be unsoldered.

A piece of PC matrix striphoard with 11 strips by 32 holes is required for mounting the MOSFET, heat sink, and the few passive components.

After completion of the component hoard. three short flying leads can be connected to the board and taken to the relevant pins on the valve base and soldered. The board can then be held in place using epoxy resin adhesive.

Setting up

With the plug-in module completed. rotate the wiper of VR1 so it is at the anode end of D1. This will ensure there is no positive bias voltage on the gate of the FET when you first switch on your receiver.

Now insert the plug-in module into its socket and connect a meter switched to its 20V DC range across R1. Switch on your receiver and let it warm up for about ten minutes.

Slowly rotate VR1, until the MOSFET springs to life. This will happen quite suddenly. Finally adjust VR1 for a drop of 2V across R1. This corresponds to a current of 20rnA flowing through the input stage which works well with my particular receiver.

Power dissipation considerations
As the MOSFET in this case is biased in class-A, it is constantly dissipating power - or heat if you like - so a good beat sink will be required. The sink needs to be at least 9.9'C/W. In my particular case. The voltage across the MOSFET was measured at 277V at a current of 20mA so the power being dissipated was 277 x 0.02. which is 5.54W.

In use
My original plug-in module has been in use for about two years now with no problems. As a bonus, the audio is much improved - especially at the high frequency end..

Parts List

R1 100R .5W
R2 1Meg .5W
VR1 = 120K .5W & 100K,
Multi-turn 10 or 20 turn
C1,C2 .01uF 63V
IRFI830GPBF ([RHOS]),
This is a isolate tab unit
18V/400mW Zener
Heat sink

SP 600 General Upgrade and Mod List

This should be considered a starting point, NOT the end of options

Power Supply

1 Replace power cord with IEC 3 wire filter. Install 3 MOV's.

2 Remove 110 volt accessory outlet if installed.

3 Remove .01 bypass capacitors on AC line, if installed.

4 Add CL-10 input rush limiter

5 Remove rectifier tube socket and replace with plate. Rewire silicon rectifiers to perf board by power xformer. Change to choke input and replace OEM filter capacitors

6 Remove V20 6AL5 bias rectifier wiring, dropping resistors and filter capacitors to perf board by power xformer and add silicon diodes. Socket may be used for product detector.

7 If so equipped, bring R72 & R73 divider network to perf board. Mount R85 (2K5 10W) on the top side of the chassis for better cooling of underside components. After a B+ regulator is installed adjust R 85 value to achieve 5 Ma. current flow for maximum life of OA2 tube.

RF Amp

Use 6BZ6 for first RF amp tube.

Consider frame grid tube modification. ***Note: This requires great mechanical as well as electronic skills. Only for the advanced.***

Mixer

Remove first mixer AGC control, if present. Set to 2nd mixer gain.

Consider John Leary's frame grid tube modification.

IF

Add manual IF gain pot if not present
Stagger tune IF. The first transformer is set at 455.7, the 2nd at 456.2, the 3rd at 456.7kc.

Detector/AGC

8 Replace V14 and V15 6AL5's with 1N4148 diodes on terminal strips. Sockets may be used for product detector or modified audio output circuit.

Consider the Hammarlund site for an AGC/Product detector.

Product Detector

Consider the Hammarlund site for an AGC/Product detector.

Audio

Do Chuck Ripple's audio mods as a minimum.

Consider replacing the OEM audio output xformer and install a 6AQ5 push-pull audio circuit and xformer. 6V6 socket can be replaced with metal plate that can hold an additional tube. Consider using SS 6AQ5's.

Tube Shield Dissipation Measurements

From: Tisha Hayes <tisha.hayes@gmail.com> Date: Fri, 17 Apr 2009 12:09:01 -0500
Subject: Re: [R-390] Black Tube Shields, IERC

A few years ago I went through the process of measuring envelope temperatures on a wide range of tubes in a SP-600 with different tube shields. It did turn out that the black IERC tube shields did make a difference in envelope temperature.

Generally speaking I was seeing 20-60 degrees F difference across the range of shields. I had tested with the following;

Factory default, silver cam-lock tube shields with the loading spring to keep the tube down it the socket

No shield at all, just using ambient air and radiative cooling from the tubes.

IERC tube shields

IERC tube shields with a dab of thermally conductive paste applied to the finger-stock grippies inside of the IERC shield (to improve thermal conduction between the envelope and the shield).

I had strictly controlled air-flow and room temperature and would let the radio stabilize for an entire day before making measurements. This was also in a room where I was not moving around in so there was a bare minimum of air movement. Room temperature was at 70 F. I measured temperature with an optical pyrometer and had put a dab of flat black paint on the top of the tube (so I could get consistent temperature readings without gluing thermocouples everywhere).

By far the worst was the silver tube shields. If anything these kept the heat on the envelope with some temperatures well above 250 F

When I used the IERC's I could get the temperatures in the 150 to 160 range. If I used the thermal paste it would knock the temperature down another 5-10 F on average.

Interestingly the chassis temperature went up when using the IERC shields due to the mechanical connection at the base of the IERC shield and the radiative cooling off of the shields. If you have a concern about capacitor/ resistor aging this may offset your worries about tube temperatures.

In every instance, the use of a small computer-fan to move air across the chassis really helped out in lowering the temperature of the tubes and the chassis. This does not need to be a gigantic fan.

If someone was really interested I could dredge up my notes and put them into a human- readable format. At the time I was doing my little experiment to justify the cost of the IERC shields. (I did end up finding IERC shields for every tube operated device I have)

Ms. Tisha Hayes

From: Tisha Hayes <tisha.hayes@gmail.com> Date: Fri, 17 Apr 2009 14:20:14 -0500
Subject: Re: [R-390] Tube Shields

I think what confuses many is the design of the IERC tube shield (and others of the same family) where the shield has a mechanical attachment (albeit by spring pressure) to the glass of the tube. Transferring heat by conduction cools the tube much more efficiently than trying to remove the heat by radiation. Whenever there is a tube shield that does not contact the glass, the only heat transfer mechanism is radiative with maybe a small amount of convective heat transfer by the random air currents inside of the shield.

Depending upon radiative cooling alone would be similar to disconnecting all of the cooling fans on your car's motor and sitting in traffic for a few hours. While some heat will be transferred by radiation (as the motor gets smokin-hot the hood heats up) the motor will seize up quickly (unless you believe Castrol television commercials). In a car, the cooling comes from moving a much cooler fluid through the hot motor, then giving that heat energy a place to go in the radiator (where it becomes forced convection transfer to the air) where the cooling fans or driving can dilute the heat into the atmosphere.

Air is a pretty good insulator of heat, look at how close your finger needs to get to a soldering iron tip before you get burned. You may feel the heat at less than an inch (radiative) but there is a dramatic temperature difference from being 1/4" away and touching the iron (conductive). Tubes suffer from the same problem where there is this tiny air-gap between the glass and the metal.

The IERC tube shields actually touch the glass in several places and the spring fingers are under slight compression. The heat transfer is from the contact. My crazy experiment was to slightly increase the thermal conduction of the spring contact area by using a small dab of thermal grease (what they use on CPU's, commonly sold at Radio Shack) to increase the contact surface area. Ideally the glass envelope and the IERC shield would be at the same temperature (yea, glass does not conduct heat evenly, that makes my brain hurt). BTW, the thermal grease idea makes a mess if you are constantly pulling tubes and has a tendency to remove tube lettering.

Where the IERC fingers come down and imperfectly "dock" with the bayonet-socket (from the silver shields) gives another conductive escape path for the heat to the chassis. To remove heat further would be to passively remove it from the radio by natural convection (heat rises) or forced convection (fans).

Ms. Tisha Hayes

Precision AM Rectifier Circuit

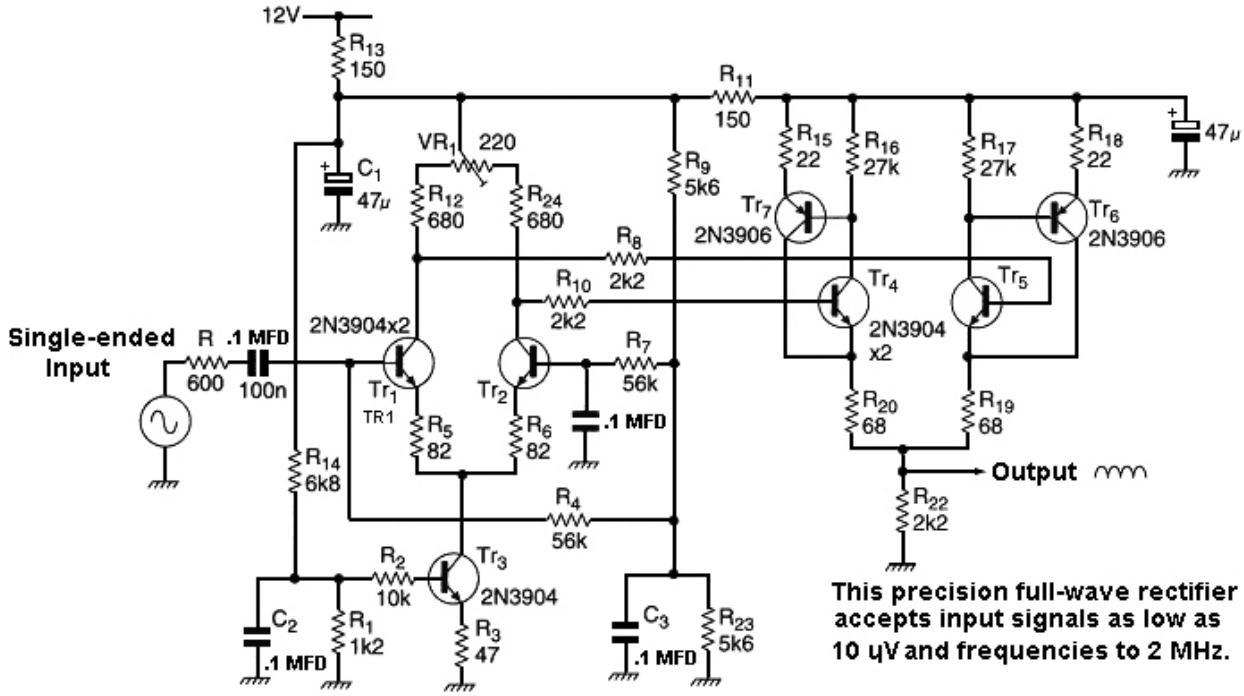

Here is a circuit that can rectify alternating signals. Such a circuit has quite a few different names and can be used in a variety of applications.

In a wireless, the circuit would be called an AM full envelope detector. This circuit would be equally at home positioned in the front end of an RMS detector and is then referred to as an absolute circuit. I will refer to the circuit as a full wave rectifier, or FWR, from now on,

Using the components shown in the diagram, this FWR will rectify up to about 2 MHz, with input signal, as low as 10µV. I originally used it for full envelope detection in a 455 KHz IF chain. It maybe possible to squeeze more speed out the circuit by reducing R_8/R_{10}.

The input can he driven differentially or from a single-ended source. Assuming a single-ended input then the input signal is split into two equal parts 180° out of phase with one another,

Splitting is performed by the long-tailed pair Tr_1 and Tr_2. The two resulting signals drive two emitter followers.Tr_4 and Tr_5. connected in conjunction with Tr_7 and Tr_6, which serve as local current feedback pairs. This action ensures super linearity right down to the micro-volt region .i,e, constant bandwidth with wide dynamic range,

Transistors Tr_4 and Tr_5 conduct alternately and the summation of the two emitter currents results in full wave rectification across R_{22}.

The DC static offset voltage will be in the region of 6V or about $V_{cc}/2$, It can easily be removed by an op-amp, leaving just the rectified signal for further processing. The gain produced by long-tailed pair Tr_1 and Tr_2 is about seven. This, suited my needs at the time. Obviously though. this gain can be changed to suit other applications.

Adjust VR_1 to balance the rectification action with the aid of an oscilloscope. The whole circuit runs from a single 12Vsupply, Most importantly, the circuit is incredibly cheap.

Darren Heywood Buckley Flintshire

Parts List

4	2N3904	2	22R	2	150R	3	2K2	2	27K
2	2N3906	1	47R	1	600R	1	5K6	2	5K6
2	47 Mfd	2	68R	2	680R	1	6K8	1	220R 10 Turn
4	.1 Mfd	2	82R	1	1K2	1	10K		

Adapted From ELECTRONICS WORLD May 2004

Intrigued by Darren Heywood's precision full wave rectifier circuit described in the January 2003 issue of Circuit Ideas *(EW page 36),* Alan Bate has come up with some different ideas

As this kind of circuit is usually implemented by linearizing a diode rectifier forward characteristic within a negative feedback loop, Figure 1 shows the classic full wave circuit using this approach. The problem with such a circuit is the performance of amplifier 1 which not only needs to have wide small signal bandwidth and but also high slew rate to rapidly switch through the open loop transition when the diodes are shut off. See **Figure 2** of a SPICE simulation at 10kHz, using general purpose small signal Schottky diodes and OP37's. Note the fast transition required of the op amp in the diode drive waveform. However, new op amps like the Analogue Devices *AD3038/39,* with a small signal bandwidth of 350MHz, and slew rate of 425V *rms* would now turn this approach into a 'humdinger of a circuit' !

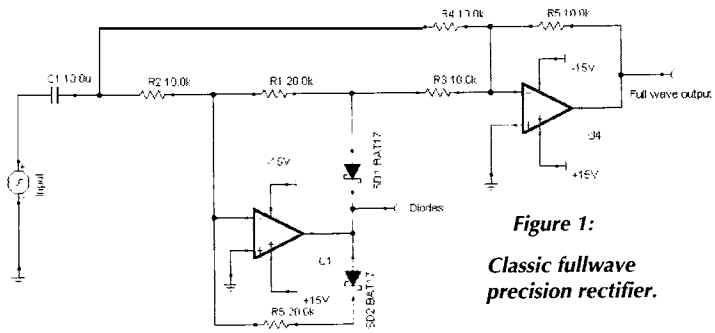

Figure 1:

Classic fullwave precision rectifier.

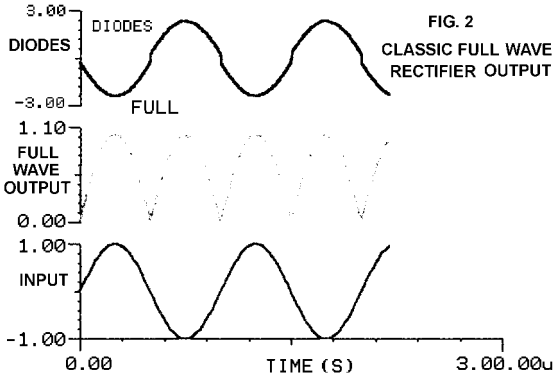

FIG. 2
CLASSIC FULL WAVE RECTIFIER OUTPUT

Mr. Heywood's approach to linearize the rectifier function is novel as it potentially offers wide bandwidth. However, his circuit suffers from a few limitations, which can easily be put right, greatly improving linearity at low signal level and bandwidth. His sensitivity and bandwidth claims of 20uV and 2Mhz are also worth investigating.

Rectifier out-put stage

The differential output rectifier stage, uses local feedback pairs in an attempt match the "rectifier gain" for each quadrant. There are three shortcomings with this circuit, which showed up in SPICE simulations.

Consider one compound pair, Tr4, Tr7. Degenerating the gain in both transistors is not necessary as there is 100% overall feedback applied to dilute the non-linearities in both transistors. The resistor R15 only suppresses precious loop gain and decreases the current transfer efficiency around the loop by raising the ac input impedance of the second transistor Tr7.

Even if the two compound pairs had infinite loop gain, we would still be left with a large dead-band around the null point. This is due to the comparatively large resistance value chosen for the emitter degeneration resistors RI9 and R20. At the quiescent bias condition, the resistors equally share the output current.

However, at either signal extremity all the output current will pass through one of the emitter resistors while the other compound pair is virtually turned off. This variation in current shifts the turn on threshold at each input, due almost entirely to the volt drop across R19 and R20.

Consider the **Figure 3** Model of the output stage DC requirements. Assuming a typical beta of 100, Vbe for silicon of 0.6 Volt, and using the rule of thumb for transistor intrinsic emitter resistance re = (26 *lie)* (based on Schottky's diode law at room temperature where the emitter current Ie is in mA)

Examining the left hand arm of the output stage Tr4 and Tr7 and letting output current = Iout (mA).

Let transistor current gain = 100, compound pair current gain = Ai = approximately Beta Tr4 x Beta Tr7 x say 50% current transfer at Tr7 base, then Ai = 100 x 100 x 0.5 = 5,000. Max input voltage (seen from the preceding stage) with Tr4 on and Tr5 fully off:
Voltage input for full output = Iout (R101 Ai + R20 + R22) + re/le (Tr4)+Vbe4. **(Eq 1)**

At the mid point the two arms of the output stage equally share the output current, so assuming the compound pair gain remains constant with lout and their Vbes (Tr4, Tr5) are equal;

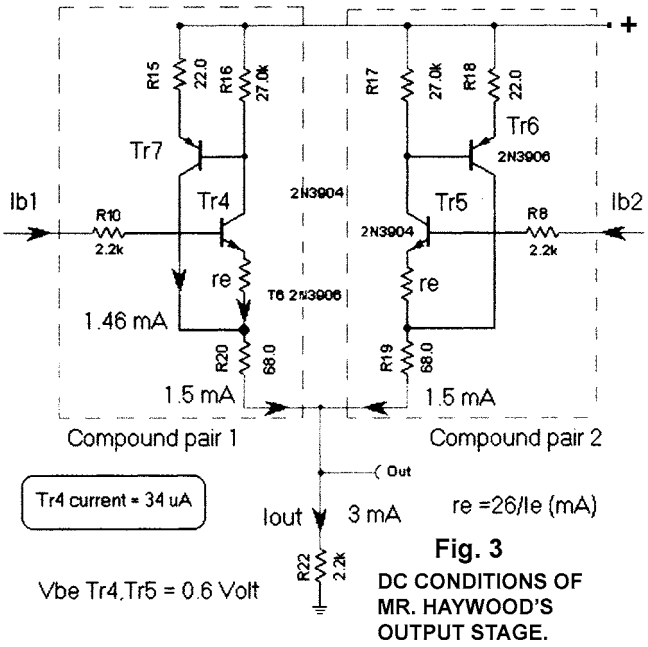

Fig. 3
DC CONDITIONS OF MR. HAYWOOD'S OUTPUT STAGE.

Voltage input at the null point = (Iout/2) (R10/ Ai + R20) + R22. lout + re/Ie (Tr4) + Vbe4. (Eq 2)

Now, assume the current in Tr4 is «Tr7, i.e. the bulk of the output current passes through Tr7, not through the re of Tr4. Running a DC SPICE analysis showed Ie of Tr7 = 1.46 mA and Ie of TR4 to be only 34.3µA. Hence, we can ignore the volt drop across re. Then: Change in Vin = (Equation 1) -(Equation 2).

Delta Vin = I(R10/Ai + R20). Iout/2 As the compound pair current gain Ai, is very large, we can ignore the volt drop across R10, simplifying the change in Vin to: Delta Vin = R20.(Iout/2)

For an output current of 3mA which is what Mr. Heywood's circuit runs at:

Rectifier stage dead-band, Delta Vin = 1.5(mA) x 68 Ohms = ±102mV

See **Figure** 4 of the SPICE simulation of the output stage differential DC transfer function about the DC null or steady state showing the dead-band discussed above.

This causes the output circuit to be 'blind' to the middle of the incoming signal, significantly reducing the dynamic range and progressively increasing low level distortion.

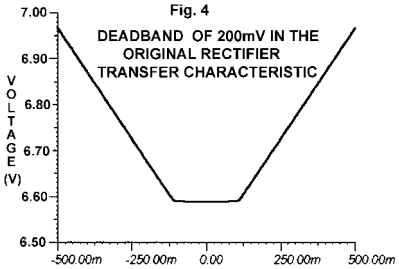

This effect when referred to the input is diluted only a little by the modest voltage gain (7: 1) of the preceding stage.

Looking at the compound pairs, the collector loads R 16 and R 17 are unnecessarily large. Here there are conflicting requirements as R 16, R 17 should be:

1. Lowest possible resistance, in order to rapidly remove base charge from Tr7, Tr6 for good high frequency performance.

2. Highest possible value, to efficiently transfer the current signal from Tr4 into Tr7 and achieve the highest current loop gain in the compound pair. R15 and R18 are not a good idea as they not only suppress gain in the wrong place but also raise the input impedance of Tr6, Tr7 and further reduce the efficient transfer of signal current from Tr4, Tr5.

The third improvement would be to ac couple the long tail pair preamplifier to the output stage.

This blocks any unwanted DC imbalance in the first stage, which any way is ac coupled on its input so there is no point in preserving DC coupling with all the associated temperature drift problems.

The bias requirements of the output stage can then be optimized separately.

Differential pre-amp stage

Considering the long tail pair input stage the current tail transistor Tr3 should be operated as a constant current device for efficient current signal transfer at the emitters of Tr1, Tr2. This means operating Tr3 in grounded base to give the highest ac output impedance (around 1MΩ at low frequency for common base). This requires voltage DC bias of the base and de-coupling it to ac right at the base with a (low inductance) ceramic capacitor. R2 defeats this, allowing a 'soggy' operation somewhere between common emitter and common base, giving a less efficient constant current sink and worse allows Miller feedback around Tr3 which adds a very undesirable capacitive lag across the current tail. This causes the high frequency gain to peak through Tr1 as it provides ac bypass to Tr1 emitter and to roll off at Tr2's frequency response by shunting the signal path to Tr2 emitter! This in turn, gives an increasing imbalance in the differential ac gain with increasing frequency. See **Figure 5a** and **Figure 5b** SPICE simulations demonstrating this effect. A minimal change is to decouple Tr3's base. The high frequency bandwidth of the circuit is also limited by the unnecessary resistors R8, R10, which with 'circuit strays' and the input capacitance of the following stage form low pass RC filters.

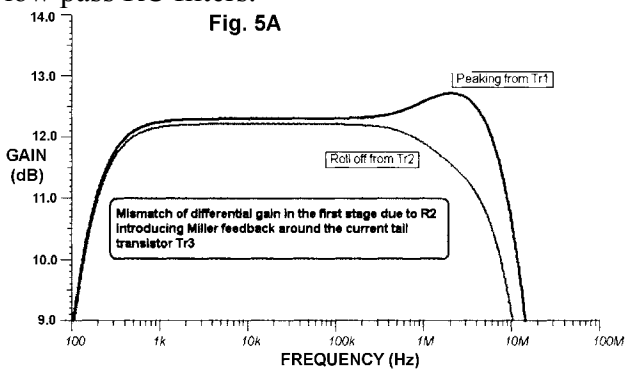

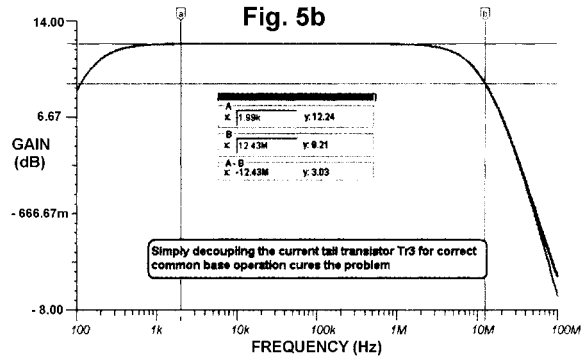

There is also a second Miller feedback effect from the base collector capacitance of Tr1. Miller feedback is minimal at Tr2 due to its de-coupled base and common base operation (with the long tail pair driven single ended). This second Miller effect can easily be demonstrated by driving the input from a low impedance generator rather than the 600 Ohm source used by Mr. Heywood. Compare **Figure 6** of the SPICE frequency response simulation of the first stage output, driven by a zero Ohm source with the 600 Ohm source performance of **Figure 5b**. Driving from a low generator source impedance 'absorbs' Tr1 's base collector capacitive current. This effectively minimizes the 'Miller effect' to the internal workings of the transistor. Adding an emitter follower to the input would be a practical way of achieving the same result.

Re-vamped circuit

With the above points in mind, I have re-vamped the circuit for interest sake, optimizing with the aid of SPICE circuit simulation.

See the **Figure 7** plot of rectifier gain versus Tr4, (and Tr5) collector loads R16 (R17) values.

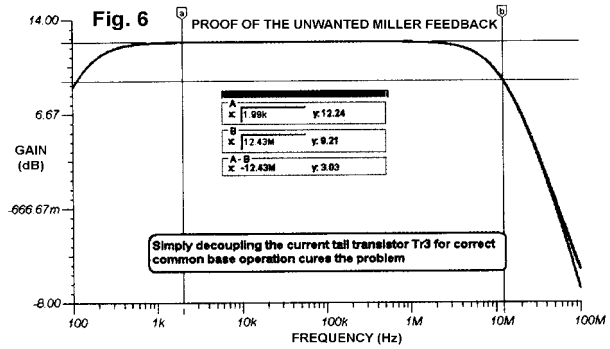

Examining the plot shows a rapidly diminishing return on gain increase with increasing load value. 3.3k Ohms appears about the optimum value, giving near maximum gain while maintaining a much lower resistance value than used in the original circuit and therefore enabling a faster turn off response. See also **Figure 8** of the revamped circuit and **Figure 9**, comparison of linearity with the original circuit at 500kHz.

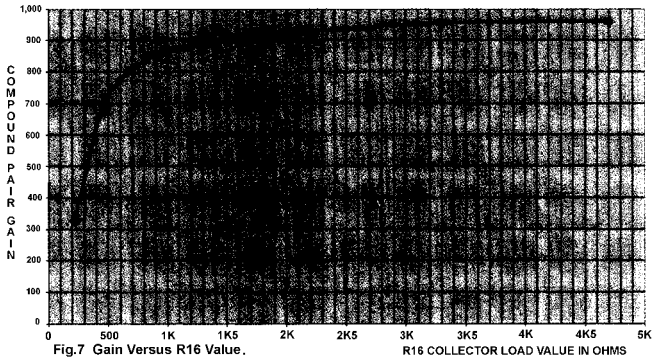

Fig.7 Gain Versus R16 Value.

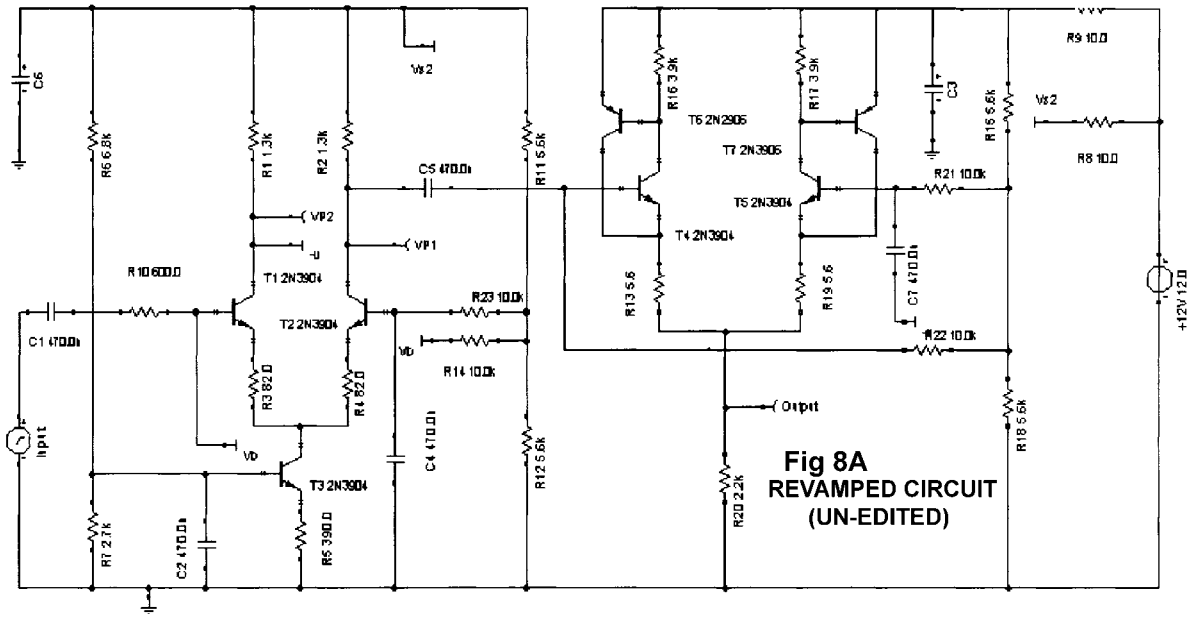

Further development.

With bandwidth limited by the Miller effect in the first stage and wishing to find a simpler output stage, my thoughts turned to designing a rectifier output stage, which would use the Cascode principle. The 'Cascode' was an amplifier topology invented back in 'valve days' to overcome Miller feedback.

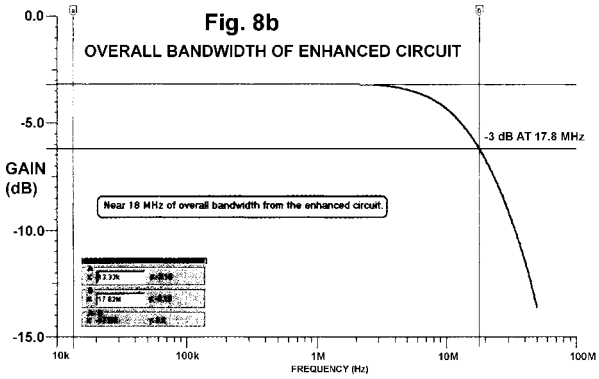

Voltage generation of the signal at the amplifier's first stage output was avoided and hence.

there was no internal feedback through the anode to grid capacitance (or base collector in transistor talk). The Cascode was used universally as the front end RF amplifier in valve VHF/UHF TV tuners to achieve high gain at RF. See **Figure 11**.

The first stage of triode amplification was fed directly into the low ac impedance of the cathode port of a second triode valve, operating in common grid (common base, in transistor talk). The first valve gave no voltage amplification but very high power gain due to the amplified signal current from the valves mutual or transconductance, gm.

The second stage had no Miller limitation due to the grounded control grid, preventing any anode to grid Miller capacitive feedback.

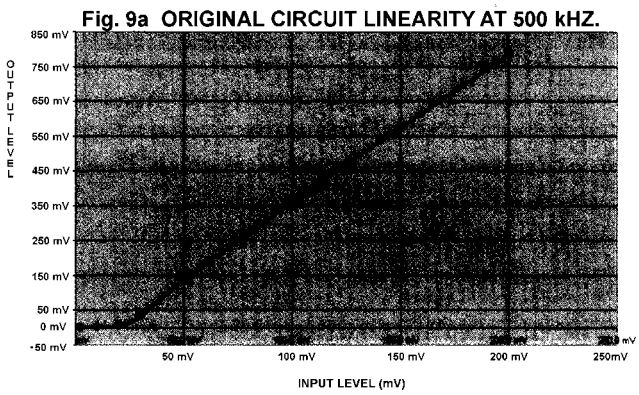

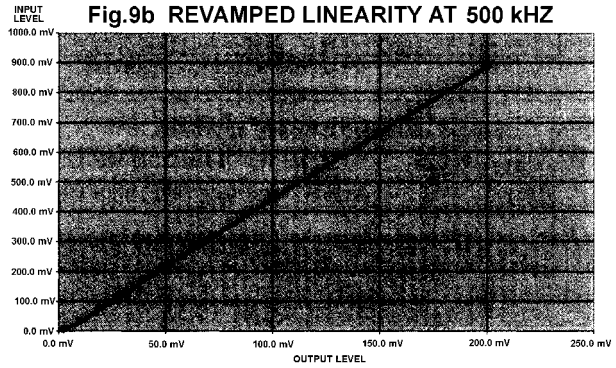

The common grid topology has high output impedance (analogous to transistor common base), allowing high voltage amplification to be achieved. The cascode principle adapts readily to transistor circuits with the advantage of folding the circuit, avoiding build up of DC levels by using complimentary PNP devices for the second stage.

They didn't have the advantage of a 'PNP valve', hence the valve circuit stacked up in its DC requirements. **Figure 12** shows my use of this technique with the output stage configured in differential common base.

The low impedance of the PNP emitters clamp the first stage output signal voltage so that the voltage change becomes minimal but near linear signal current is transferred into the output circuit. AC coupling and the high value emitter bias resistors allow each PNP transistor to be accurately biased on the verge of conduction.

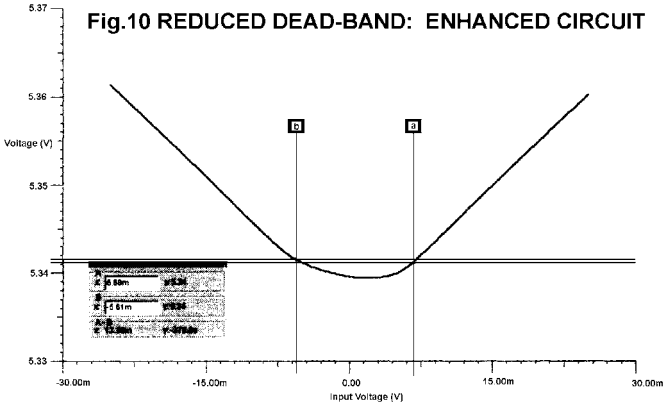

Figure 10, comparison of frequency response with the original circuit.

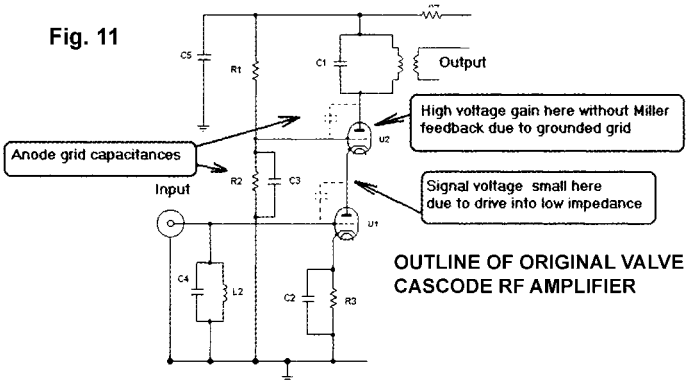

As soon as each amplified signal from the first stage swings positive the relevant PNP transistor conducts and the signal current flows on into the output resistive load. Common base operation ensures the PNP transistors will have very closely matched gains. Because hfb = hfe/(hfe + 1) and with hfe variations of 100 minimum to 300 typical for the 2N3904 devices used, the common base gain or emitter efficiency will only vary around 0.9901 to 0.99668.

The common base operation also enables high voltage gain to be achieved due to the inherently high output impedance of around 1M Ohm at low frequency, allowing a high collector load value.

See **Figure 13** of the simulated linearity at 500kHz showing non- linearity at very low levels (where re will be large and current gain at its lowest) and the simulated drive and output waveforms at 500kHz (**Figure 14**). Note the clamping of the pre-amp output voltage on each positive half cycle where the associated PNP turns on.

Fig. 12 CIRCUIT OF FOLDED CASCODE APPROACH (SPICE DRAWING)

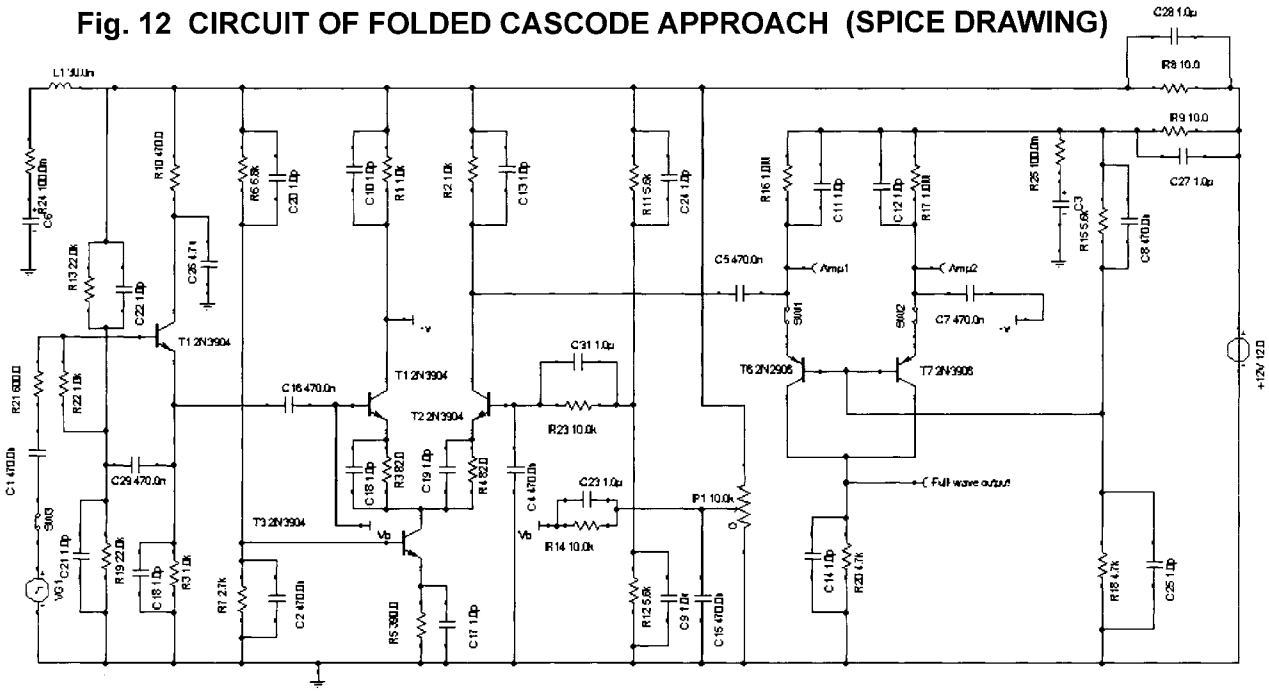

The active part of each signal offers little voltage variation and hence minimal Miller feedback, allowing near full bandwidth to be achieved on the positive half cycles. What happens on the negative cycles is a 'don't care' as the corresponding output device is shut off. This allows some over loading of the first stage to occur on large signals, with the input transistors bottoming on the unwanted negative half cycles.

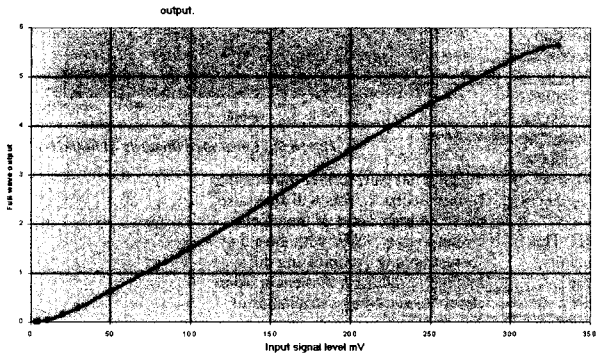

Figure 13: Linearity at 500kHz of the enhanced circuit using the PNP rectifier output.

Fig. 14 FOLDED CASCODE WAVEFORMS AT 500 kHz

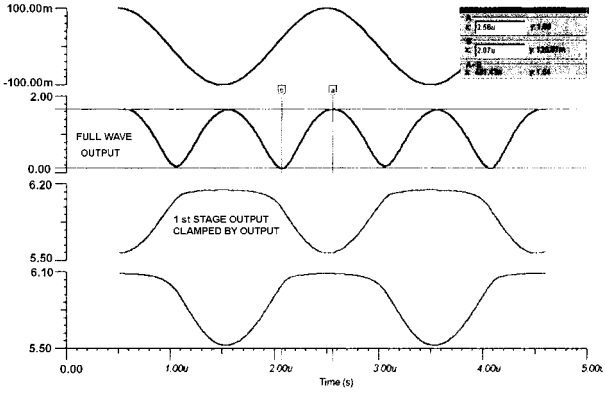

This effectively increases the dynamic range at frequencies where the propagation delay of Tr1 and Tr2 can be ignored. Finally a spare NPN transistor (the original circuit uses seven transistors) is used as an input (where re emitter follower to provide a low AC impedance drive, of around 15 Ohms to the long tail pair, further minimising Miller feedback. This will also raise the input impedance of the input circuit to over 50k Ohm with the aid of 'bootstrapping', eliminating the loading of the input bias chain from about 10 kHz. Stray capacitance of 1 pF has been assumed in the simulations across each resistor. Circuit strays have not been included in the simulations, as this will depend on layout.

Word on bread boarding

My own bread board method today is to glue surface mount components using 'super glue' to industrial fibre glass FR4 board with copper on the opposite side to serve as the reference (ground) plane. Unpopulated etched boards can also be used with the green masking serving as an insulating barrier. This has perfectly adequate insulation for low voltage circuitry.

If space is not an issue use 0805 size passive chip components as they are easier to manage than the smaller 0603 size components. Use the smaller 0403 components only if you have bionic eyesight! Wire point to point to the chip ends using the fine Kynar insulated wire available from RS or Farnell components. Glue down the wires to the required layout. Keep wiring as short as possible, especially to inputs of active devices.

I have found bread boarding like this gives a reasonable approximation to a final PCB layout using a ground plane.

Note on Miller feedback

This is the effect that unless prevented, kills bandwidth in any voltage amplifier. Assume we have an amplifier device with a voltage gain Av of 100 and ideal infinite input resistance with zero output impedance. It has unwanted feedback capacitance between the input and output terminals of Cf. The capacitance will cause feedback signal current from input. Usually, this feedback is small say 2pf.

The capacitor current will be proportional to the voltage across the capacitor, which in our case is Vin -(-Av. Vin) or Vin(1 +Av) = 101 Vin.

If the capacitor volt drop has increased 101 times due to the amplifier then the feedback capacitive current will be101 times larger for the same input voltage. The feedback capacitance Cf, now looks 101 times bigger at the amplifier input! The problem occurs when we drive the amplifier input from a real world generator of finite source impedance Rs. With no voltage gain, the capacitance will be the input capacitance (Cin +Cf) which will form an RC lag with the generator source impedance, giving in turn a low pass RC filter. -3 dB bandwidth = 1/ (2π Rs (Cin +Cf)). If we now add gain Av, the bandwidth will shrink accordingly as-3 dB bandwidth = 1/ (2π Rs (Cin + Cf (l + Av)))

The bandwidth has now reduced in proportion to the voltage gain of the amplifier, in our case by one hundred times! This occurs inside any bipolar transistor due to the collector to base capacitance and the base spreading resistance rbb giving a minimum input source impedance even when voltage driven. This is why the common emitter gain of a transistor is often considerably less than its transition or unity gain frequency would imply.

Editors Notes:

1. I have re-drawn circuit Fig. 12, translating the circuit from SPICE to what normal human being's use and titled it Fig. 12A. The screen values on the figures are unreadable on the copy I have. If you can figure them out great.

2. Where the original schematic used lines ending in symbols to signify inter-connections they were removed and replaced with solid lines. After I did that the circuit explanation became more clear.

2. I removed the 1pF stray capacitor symbols, the power line inductance and the ESR values to the electrolytic capacitors as they are irrelevant to this circuit.

3. There was nothing in the text of drawings explaining what P1 did or how to adjust it. Reading the text of Darren Heywood's precision full wave rectifier circuit that's included with this addition may provide the answer.

4. I believe the author Alan Bate while having great technical skills has been out in the noonday sun far too long when he doesn't recommend using ordinary discrete components for construction.

5. Be aware that you might have to do a lot of circuit layout changes to get this circuit to operate as one would wish.

6. Last but not least, I made a great effort not to make errors in my drawing BUT CHECK IT YOURSELF!

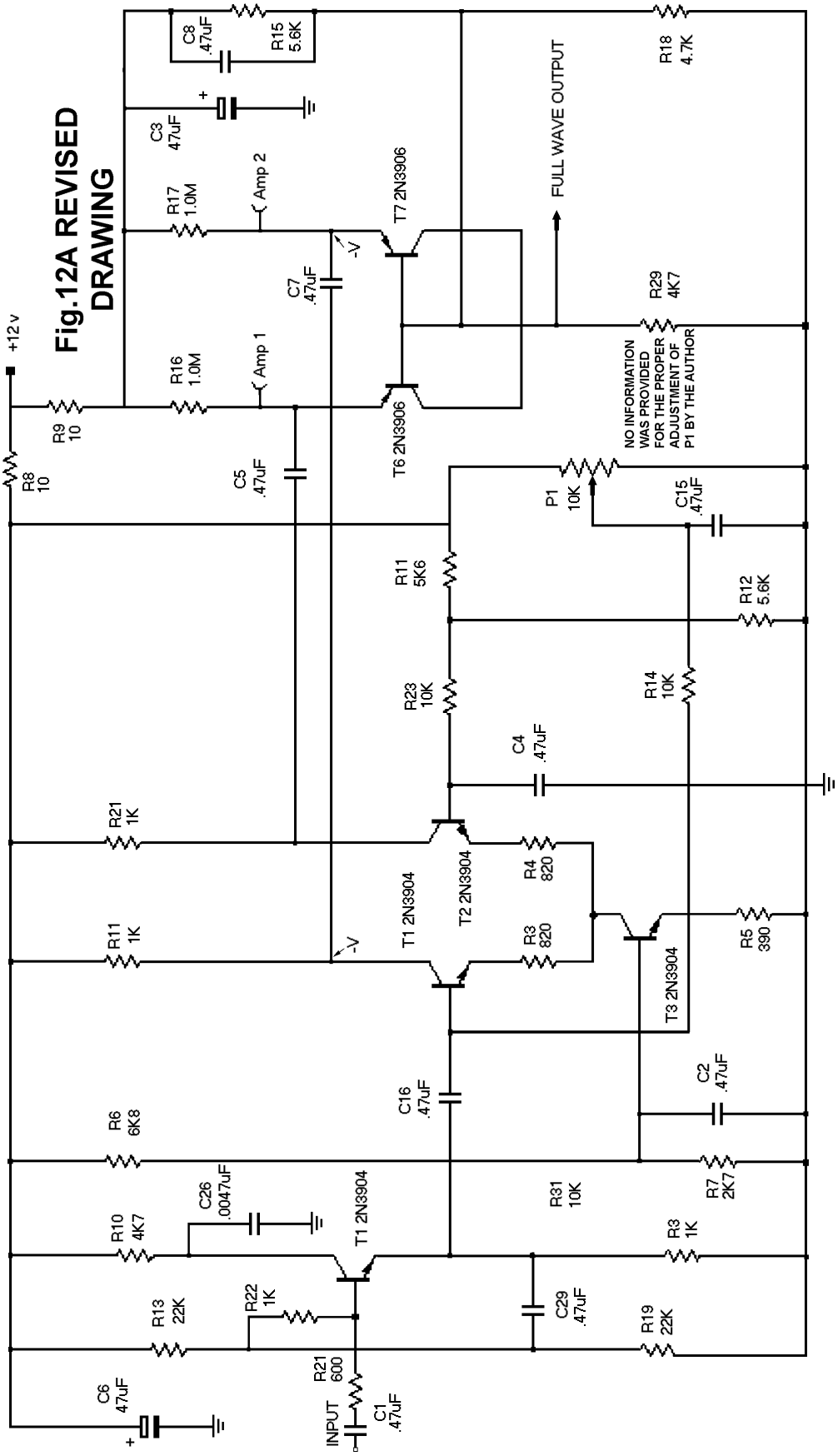

An Improved, Precision, Full Wave AM Detector

By Rob Schenck, K2CU K2CU@arrl.net

Detector Schematic

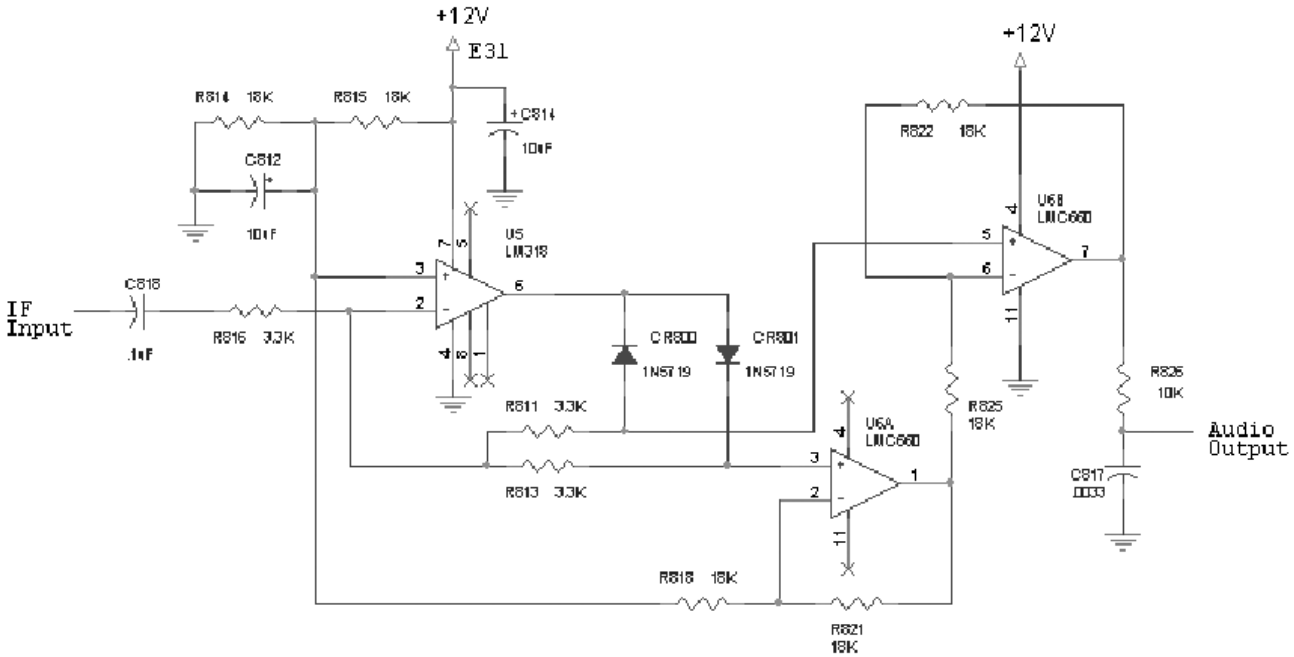

Theory of Operation

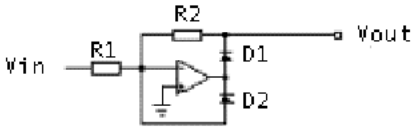

This circuit is a variation of the classic "Precision Half Wave Rectifier" as described in many op-amp application notes as shown:
Its operation is based upon basic principles of operational amplifier circuits. An ideal op-amp has extremely high input impedance, extremely low output impedance, and extremely high gain. Note the operative word "extremely". The non inverting input (+) of the op-amp is connected to ground. Feedback is provided by the two paths R2+D1 and D2. The op-amp will drive its output pin to a voltage such that the inverting input (-) is at ground voltage. There will be a slight variation (a few millivolts) from 0 volts as a result of what is known as input offset voltage, a property of real op-amps. The inverting input is often called the summing junction, as the sum of the currents in that node will be zero. Since virtually no current flows into the inverting input (-) of the op-amp itself, any current coming in through the input resistor R1 will be met by an equal and opposite current coming through either of the two paths of R2+D1 or D2.

The I.F. input signal will produce an input current of: I in = V in/R1

During the negative half of the input AC waveform, the op-amp output will drive positive such that the current through R2+D1 will be equal and opposite the input current, or:

I in = V in/R1 = -ID1 = -IR2

The voltage developed across R2, and hence the output voltage as the left side of R2 is at ground potential, will be:

V = Vout = -IR2 * R2 = -Vin/R1 * R2

By setting R1 = R2, the output voltage will be; V out = V in.

Similarly, the positive going input cycle produces a feedback current through D2. Any non linear voltages developed across the diodes is not relevant as the output is derived from the feedback resistor only.

A full wave detector was desired for a 50 KHz IF application so that the ripple frequency out of the detector would be 100 KHz, and more easily filtered. In the full wave detector version of the circuit, a second feedback resistor is added to the D2 diode path to produce a voltage of the other half of the input waveform. A virtual ground at +6 Volts was created with R814/R815/C812, so that the circuit could operate from a single supply. Again, any non linear voltages developed across the diodes are not relevant. The two rectified half waves are combined in the next two op-amp stages. The two outputs of the rectifier on R811 and R813, are connected directly to the non-inverting inputs of the op-amp stages so that there will be minimal loading to these outputs. U6A provides a gain of two to the signal voltage on R813. U6B provides a gain of two to the voltage on R811, and inverts and adds the output of U6A. The result is a full wave rectified signal at the output of U6B. Simple low pass filtering will remove the carrier energy which is at twice the ripple frequency.

The ability of this circuit to accurately track the input waveform is dependant on the speed of the op-amp and the switching speed of the diodes. For the circuit to track the input, the op-amp must be considerably faster than the input frequency. The LM318 with its 15 MHz bandwidth was selected for this reason and because it is readily available and stable. This circuit was built up and set up for comparison with the stock envelope detector in a Drake R4-C with a 50 KHz I.F. A HP 8640 signal generator was used to provide a 1Khz modulated carrier at 3.885 MHz which was input to the antenna connector. The input level was set to S9 (30 uV). The detectors were compared at modulation levels of 80% and 99+ %. A Link Inc. , PC based oscilloscope was used to record and display the resulting waveforms.

The distortion is visible at the crest of the wave, where the input signal is at the modulation trough in this inverting detector. The distortion at 80% is less visible than at 99+%, but still audible.

Applying the 99+% modulated signal and using the precision rectifier results in the waveform on the right below

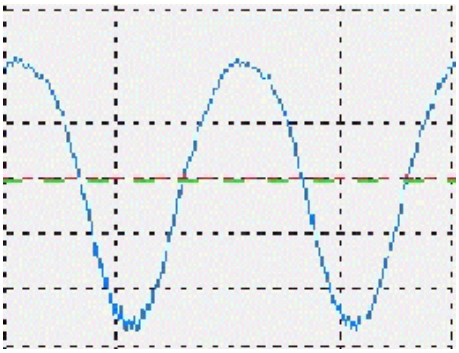

R4-C Stock Detector at 99+%

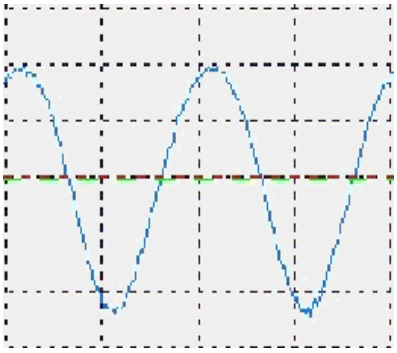

R4-C Stock Detector at 80%

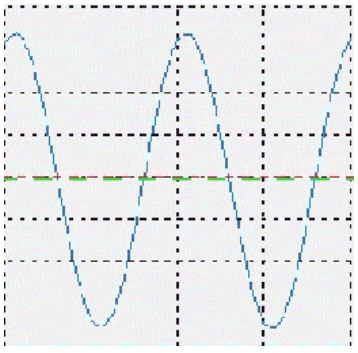

Precision Detector 99+% Modulation

This waveform displays virtually no distortion not only visually, but also audibly. A pure tone is heard coming from the speaker. Actual on air comparative listening tests of 75 meter AM signals at levels from just over the noise to well over S9 were quite conclusive. Low level signals could be more easily heard through the noise, and high level signals we noticeably clearer.

Comments: Purists may want to use LM318 op-amps for all three stages, but I found no significant improvement when doing same at 50 KHz.

I wanted to pick parts that were readily available and in particular in DIP packages so that any builder would be able to build up the circuit on a perf board, preferably the type with a ground plane on one side. This circuit is so stable at 50 KHz, that it was actually built and tested using a prototyping board with no ground plane at all. Operation at 455 KHz will definitely require a ground plane in the construction. At 455 KHz IF frequency and higher, the combining circuitry requires the use of three LM318's or equivalent.

The Math Behind The Detection Process.

There have been several articles written discussing the production of harmonic distortion by diode envelope detectors. Almost all of these start with the exponential diode equation and then examine the cross modulation products derived from the series expansion of the exponential function.

$$eX = 1 + X + \frac{1}{2} X2 + 1/6X3 + 1/24\ X4 + ...$$

The simplistic AM modulated signal is:

V(t) = cos(Wc) t + m/2 cos(Wc - Wm) t + m/2 cos(Wc + Wm) t , where m is modulation index = Carrier + LSB + USB

The term of significance in the e^x expansion series is the square term as it provides the cross product of the carrier with each sideband, as in synchronous detection. Unfortunately, it also provides the cross product of the two sidebands which produces second harmonic distortion of the modulating signal.

Consider : (a + b + c)2 = a2 + ab + ac + b2 + ba + bc + c2 + ca + cb = a2 + b2 + c2 + 2ab + 2ac + 2bc

Where; cos(Wc) t = a m/2 cos(Wc - Wm) t = b m/2 cos(Wc + Wm) t = c

The three squared terms produce signals at twice the carrier frequency by the trigonometric double angle formulas:

$$\cos2(W) = \frac{1}{2} (\cos (2W) + 1)$$

The 2ab and 2ac terms multiply each sideband with the carrirer:

2 (cos(Wc)t) (m/2cos(Wc-Wm)t) = m/2 [cos (2Wc –Wm)t + cos (Wm)t]

2 (cos(Wc)t) (m/2 cos(Wc+Wm)t) = m/2 [cos (2Wc +Wm)t + cos (Wm)t]

Which results in double sideband AM at twice the carrier (2Wc) plus the desired, demodulated output m cos (Wm)t.

These detectors are often referred to as square law detectors for this reason.

The problem is the 2bc term which is the cross modulation of the two sidebands themselves. It results in:

2bc = 2 (m/2 cos(Wc-Wm)t) (m/2cos(Wc+Wm)t) = m/4 [cos(2Wc)t + cos (2Wm)t]

The m/4 cos (2Wm)t term represents some 25% second harmonic distortion, which is much more than what is usually experienced in the real world.

In the real world, diode detectors work into a load resistor which often has a parallel "filter" capacitor.

If the diode were an ideal device, it would only allow current to flow in the load resistor during precisely one half of the input waveform. The resultant voltage developed across the resistor would then be precisely the half wave rectified voltage of the input signal. The reality is that the current/voltage relation in a diode is a non linear, exponential function as has been discussed. This means that the output voltage on that resistor would be the half waveform of the input signal minus the voltage across the diode.

$$V\ out = V\ in - V\ diode$$

It is the voltage across the diode that is the non-linear portion of the output signal, which becomes dominant at low input levels, such as the modulation trough of an AM signal. There are techniques that have been employed to reduce the diode component of the output waveform. One is to drive the detector into a high impedance load resistor. With the current very low, the voltage produced on the diode will be low. This approach is limited by the generally ignored reverse current of the diode. At high impedance levels, the rectifying function of the diode becomes compromised by the reverse leakage current, resulting in other performance problems.

The precision rectifier uses the features of op-amp feedback design to eliminate the diode error from the rectification process, resulting in a "perfect" rectifier. Well, why does a perfect rectifier work as a detector anyway? Most diode detector discussions talk about the square law function as discussed above to explain the demodulation process. The received carrier multiplies against the received sidebands. This is where the error comes in the thinking that it also should produce an objectionable level of second harmonic distortion. Let's go back to the pure half wave rectified signal that the precision detector produces and the diode with the load resistor tries to emulate. What is the process that takes an input signal at some frequency, Wc, and outputs only the positive half of the waveform. It is just as if the signal were multiplied by one during the positive half cycle, and zero during the negative half cycle. The type of waveform to do this would be a square wave, with a values of one or zero, and at the same frequency and phase as the incoming carrier. The mathematical representation of a square wave is what is known as a Fourier Series expansion. For our sequence of one, zero, one, zero... at a frequency of Wc the function is:

$$f(X) = \tfrac{1}{2} + 2/Pi \cos Wc\ t + 2/3Pi \cos 3Wc\ t + 2/5Pi \cos 5Wc\ t +$$

When this is multiplied times the incoming signal, we get a result that is the half wave rectified waveform. Our interest is in the fundamental term, cos Wc t. The higher frequency harmonic terms and the DC term will produce results that are all at or above the incoming IF frequency. So the product term of interest becomes:

$$Vout(t) = \{A \cos(Wc)\ t + \tfrac{1}{2} AB \cos(Wc - Wm)\ t + \tfrac{1}{2} AB \cos(Wc + Wm)\ t\} * 2/Pi \cos Wc\ t$$

The demodulated sideband terms are:

$$Vout(ty) = AB/2Pi * \cos(Wm)\ t + AB/2Pi * \cos(Wm)\ t\ , \text{ or}$$

$$Vout(ty) = AB/Pi * \cos(Wm)\ t$$

There are no intermodulation terms to contend with. In fact, functionally, this is identical to synchronous detection. The negative half wave signal is derived in a similar fashion. The two signals, when combined in the summing circuit produce an output with twice the ripple frequency to be filtered by an output low pass filter. This is of value when the IF frequency is only 50 KHz, as in the Drake R4-C and others. For receivers with a 455 KHz or 500 KHz IF, replace the two LCMC660 op amps with a pair of LM318's.

Elliptic Low Pass Audio Filters

Dallas Lankford 7/4/05 Rev 7/10/09

There are a number of different accessories for improving recovered audio from strongly fading MW and SW signals, including audio filters and AM synchronous detectors, for which designers, sellers, and users have often given glowing praise. But I have heard only modest improvement due to these kinds of devices when the receiver used with the devices had a suitably slow AGC release time. The distortion which one hears from strongly fading MW and SW signals manifests itself as high frequency sound akin to noise. So an appropriate low pass audio filter should substantially improve the audio quality of strongly fading MW and SW signals. However, the audio filters I tried did not. I suspected that either the cutoff frequencies of the filters were not appropriate, or the shape factors (roll off) of the filters were not appropriate, or both, or other factors were responsible for the lack of audio improvement. Also, many audio filters roll off the low frequencies, giving the recovered audio a tinny sound which degrades audio quality in my opinion. And there are no digital artifacts with the elliptic low pass audio filter as there were with a Timewave DSP-599zx filter which I used some time ago. Rather than spend thousands of dollars (Stanford Research 640) for audio filters with variable cutoff frequencies and steep attenuation roll off, which still might not be satisfactory and which might require additional circuits, I decided to design and build such audio filters myself; see the schematics above.

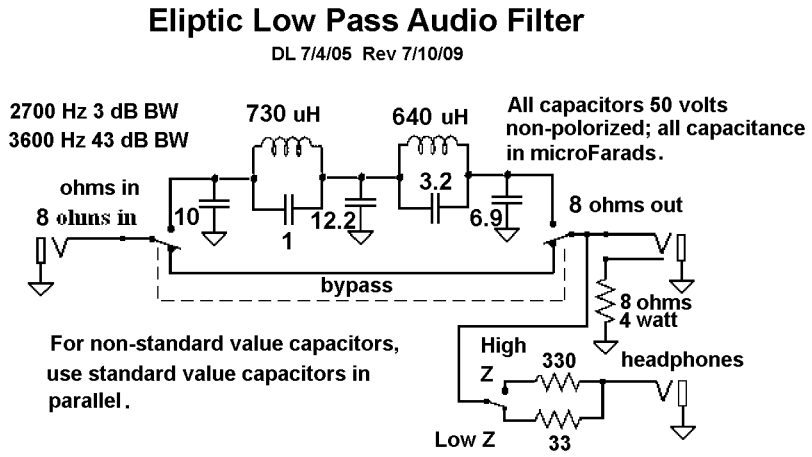

Option

A wider BW filter does not improve recovered audio as much as the 2700 Hz BW filter above. Nevertheless, below is a 4000 Hz BW filter for those who desire one. It can be used in place of the bypass, or a 3 rd option as I did for two of the prototypes.

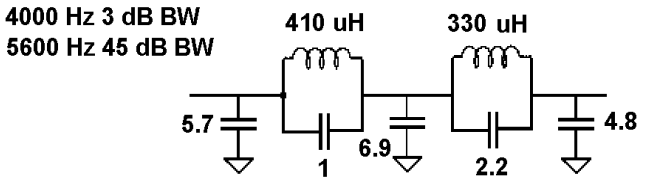

After considering possible kinds of audio filters, it seemed to me that elliptic filters, if they could be scaled to practical audio frequencies, might provide the sharp cutoff I wanted. Also, elliptic filter tables (in the ARRL Radio Amateur's Handbooks) allowed me to easily determine component values for whatever cutoff frequencies I wanted, and to scale the values for 8 ohms. As it turned out, the component values for 2.7 kHz and 4.0 kHz cutoff frequency elliptic low pass filters were practical. The voltage for 2 watts into 8 ohms is 4 volts. I used 50 volt non-polarize capacitors for greater power handling capability. The current for 2 watts into 8 ohms is 500 mA. No high Q and high current off-the-shelf inductors were found. So the inductors were wound on Amidon FT-82-61 toroids (u = 125) using #24 enameled copper wire. There is no formula for calculating the number of turns for multi-layer toroids. So the numbers of turns were found by trial and error using an Almost All Digital Electronics inductance meter (the current version is L/C Meter IIB; www.aade.com).

I used between 2 and 3 close wound (on the inside circumference) layers of #24 enameled copper wire, about 95 turns for 740 uH and about 89 turns for 630 uH. I used between 5 and 6 feet of #24 wire for each inductor, which provided excess wire (better too much than not enough). For 410 uH and 330 uH the turns were 72 and 65 respectively. The 8 ohm resistor at the output (which is switched by the 1/4 inch plug) provides the necessary 8 ohms filter termination when a speaker is not used. The switched resistors in the headphones line are for high and low impedance headphones. The filter input must be connected to the 8 ohms speaker output of the receiver; otherwise the filter performance will be degraded.

An audio spectrum analyzer was used to examine the shape factors of the elliptic low pass audio filters and to study the nature of fading distortion. The best audio spectrum analyzer we found for these purposes was WavePad; see www.nch.com.au/wavepad . Two "snapshots" of the WavePad spectrum display are given below. The first spectrum snapshot, without filtering, shows where most of the fading distortion occurs, in the frequency range above about 3500 Hz. The second spectrum snapshot shows the audio typically obtained with the 2700 Hz bandwidth elliptic low pass audio filter. The shape of the 2700 Hz bandwidth filter is better than 96 dB per octave (as indicated on the snapshot), but not as good as the Timewave DSP-599zx (also indicated on the snapshot). Also, the stopband of the 2700 Hz filter is not nearly as good as the DSP-599zx. Nevertheless, the 2700 Hz elliptic low pass audio filter stopband has been more than adequate for substantially reducing, if not totally eliminating, fading distortion.

Winding 4 toroids with between 65 and 96 turns of #24 enameled copper wire is quite tedious. So I thought about how I could implement the 2.7 and 4.0 kHz BW filters using only two toroids with taps. As it turned out it can easily be done in an obvious manner (using two tapped toroids, and switching capacitors) with the with a 6 pole double throw toggle switch.

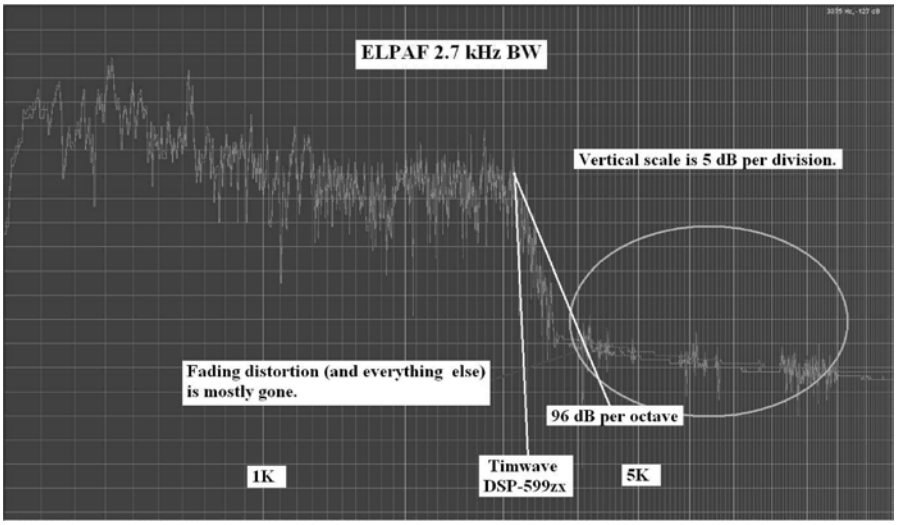

But I could find none in my catalogs. A high quality 6 pole double throw rotary switch is available for about $30, Electroswitch part # D4G0603N (Mouser 690D4G0603N), so the switched filter can be implemented that way By taking some minor liberties with the filters designs, a 4 pole double throw toggle switch can be used.

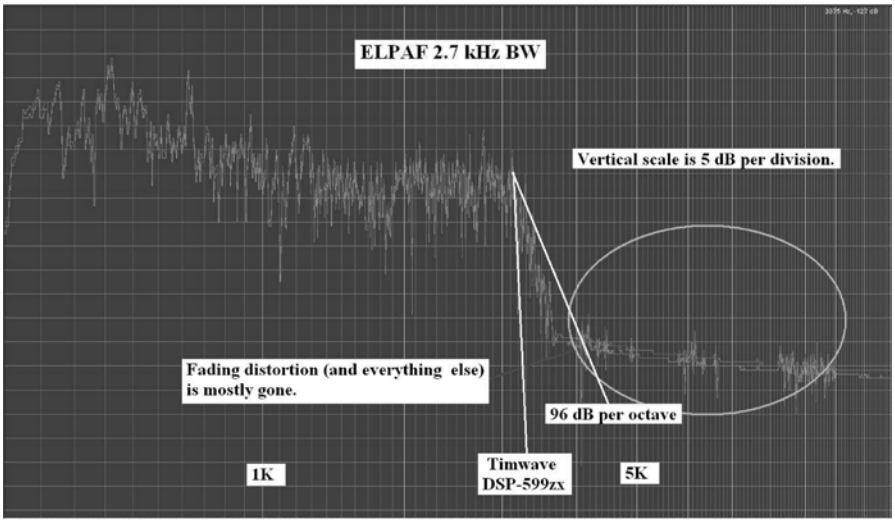

I used Allied Electronics 6763280 large lever C&K toggle switches, about $16, rated at 100,000 make and break cycles

The bypass shown in the schematic to the right is optional. Because a 5th switch position is not available with the toggle switch, the 2.2 mF cap cannot be switched to 3.2 mF; instead the 640 uH inductor is increased to 930 uH to give the same resonant frequency for that parallel LC. And because there is no 6th toggle switch position, the output cap cannot be switched; instead the intermediate value of 5.7 mF is used in place of switching 4.7 mF and 6.9 mF.

A Simlified Switched 2.7 And 4.0kHz BW ELPAF
DL 11/6/05 Rev 7/10/09

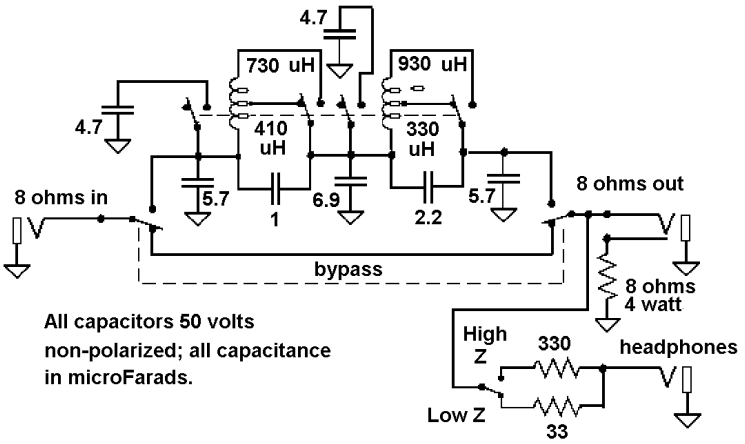

New MRF581A Transformer Feedback Amplifiers

Dallas Lankford, 8/26/08 Rev 7/10/09

The new MRF581A transformer feedback amplifiers described here were developed for use with insensitive low impedance antennas when used with relatively insensitive receivers, and for DXing situations where a high intercept preamplifier with more than normal gain is needed.

The single MRF581A amplifier at right was used with an LC tuned MW whip antenna with low impedance output together with a Grundig G5 portable radio to determine man made noise levels at remote sites.

For that application a high Q inductor consisting of 54 turns of #22 enameled copper wire on an Amidon FT-82-61 toroid with a four turn link was used.

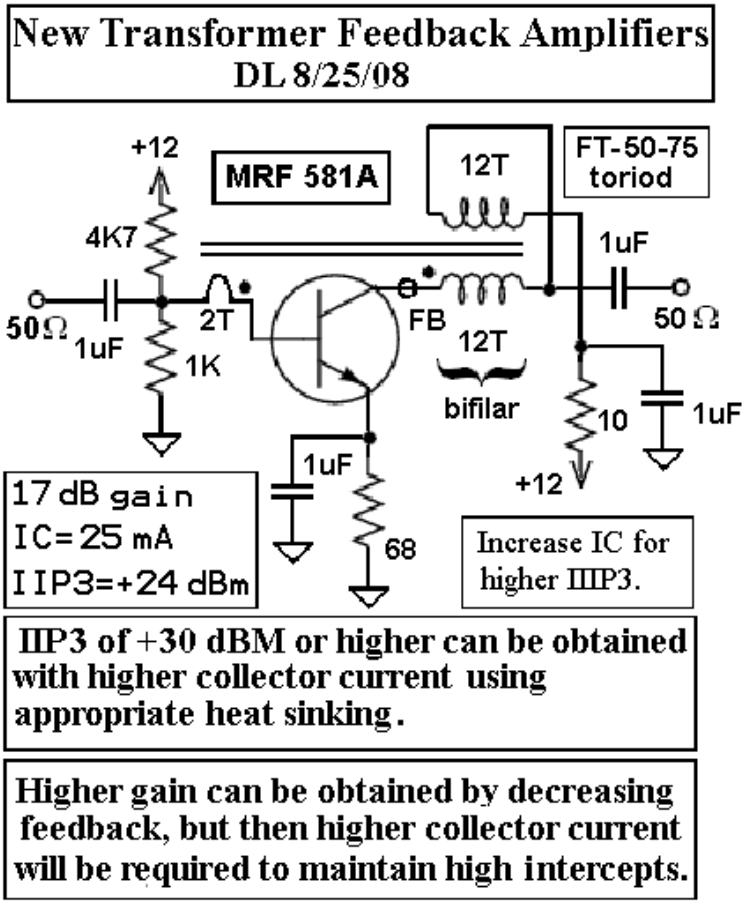

For broadband antennas a push-pull implementation using two of these amplifiers is recommended in order to obtain higher 2nd order intercepts. Substituting BJT's is not recommended. Sensitivity to DC coupled man made noise was observed when using an AC-DC power supply and was subsequently eliminated by a common mode choke consisting of 30 bifilar turns of #22 enameled copper wire on an Amidon FT-114-75 or -J at the DC input to the amplifier.

Short Amplified High Performance MW, LW, And SW Vertical Antennas

Dallas Lankford, 10/10/06, rev. 5/9/08 rev. 7/10/09

The amplifier is a push-pull Norton amplifier. It is described in several articles in The Dallas Files at www.kongsfjord.no

Antenna T may be an Amidon FT-114- 75 or FT-114-J with 80 close- spaced turns of #26 enameled copper wire primary and 8 turns wire of #26 enameled copper secondary at the grounded end of the primary.

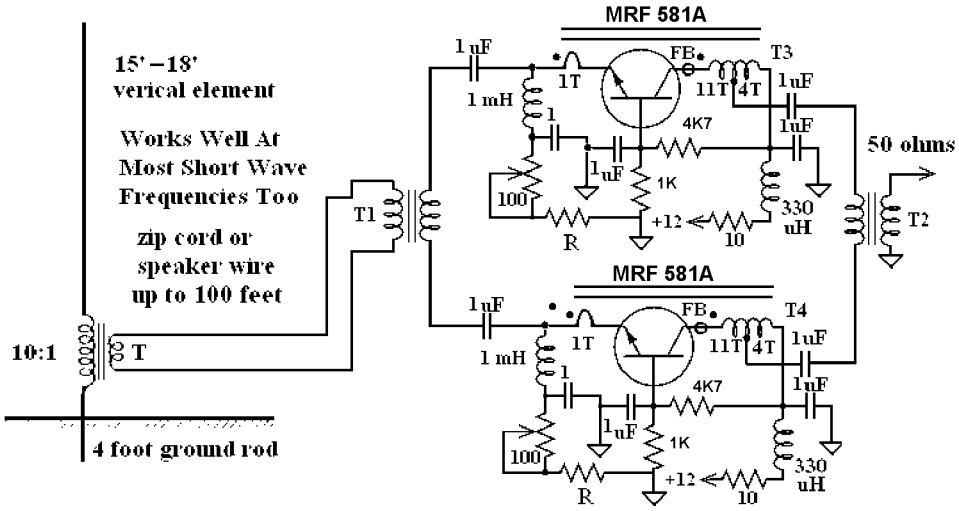

It is important to insulate the toroid T with, say, Scotch Glass Cloth Electrical Tape to prevent possible- shorting of turns (high permeability material is a semi-conductor).

If constructed with appropriate hardware, such as a 12' telescoping MJF J whip, a DX Engineering 5' nominal threaded aluminum mast section and coupler, and a Fire-Stick model K4 Stud mount, then it is easy to put up and easy to take down. The- Fire Stick or' equivalent whip element mount should be mounted on a heavy duty plastic electrical junction box, with the transformer T inside. If a metal box is used, water surface tension can cause the whip element to short during and after rain due to acid content of the rain or other ion contamination. A Delrin Antenna Insulator made by GeoTool may be used with a metal box if desired; see: www.geotool.com.

If you don't wish to build the amplifier yourself, you can buy one or two from Kiwa Electronics

The Best Small Antennas For MW, LW, And SW

Dallas Lankford, 5/5/08, rev. 3/30/09 rev. 7/10/09

The amplified vertical antenna below was developed during experiments to see how short I could make a noise reducing vertical antenna while maintaining good sensitivity using only a 10.8 dB gain push-pull Norton amplifier (discussed in detail in other articles in The Dallas Files) to bring signal levels back up to a good level. The amplified 15 foot noise reducing vertical antenna is not an active antenna. The push-pull Norton amplifier, which is located at the receiver, is a low impedance device (as opposed to the high impedance FET's used in most active antennas) and consequently does not have the common mode noise problems which active whips and active dipoles sometimes have.

This amplified short noise reducing vertical was tested with twin lead up to 100 feet in length. A pair of these separated by about 60 feet makes a good MW phased array. If you are not a builder, you can buy an equivalent Norton amp from Kiwa Electronics for about $110 plus shipping (as of May 2008). The gain of the 15 foot noise reducing vertical is about -15 dB, and its 2nd and 3rd order intercepts are typically greater than +120 dBm and +60 dBm respectively in the MW band. When used with a push pull Norton amplifier the cascaded input 2nd and 3rd order intercepts are greater than +95 dBm and +50 dBm respectively in the MW band. It is, in my opinion, the best small omni directional LW-MW-SW receiving antenna, period. A previous version used relay switching for improved performance at higher SW frequencies. Increasing the antenna transformer turns made relay switching unnecessary. I use two of them as my current phased receiving array. The antenna is now excellent for LW, MW, and SW. All of my longer and higher passive inverted L's and verticals and all of my active antennas have been permanently retired.

The amplifier is a push-pull Norton amplifier. It is described in several articles in The Dallas Files at www.kongsfjord.no

Antenna T may be an Amidon FT-114- 75 or FT-114-J with 80 close- spaced turns of #26 enameled copper wire primary and 8 turns wire of #26 enameled copper secondary at the grounded end of the primary.

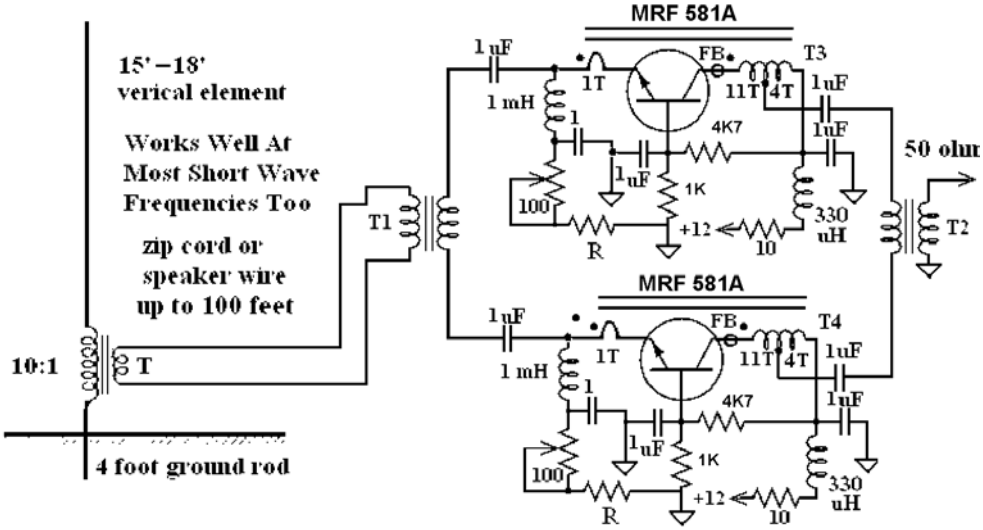

It is important to insulate the toroid T with, say, Scotch Glass Cloth Electrical Tape to prevent possible- shorting of turns (high permeability material is a semi-conductor).

If constructed with appropriate hardware, such as a 12' telescoping MJF J whip, a DX Engineering 5' nominal threaded aluminum mast section and coupler, and a Fire-Stick model K4 Stud mount, then it is easy to put up and easy to take down. The- Fire Stick or' equivalent whip element mount should be mounted on a heavy duty plastic electrical junction box, with the transformer T inside. If a metal box is used, water surface tension can cause the whip element to short during and after rain due to acid content of the rain or other ion contamination. A Delrin Antenna Insulator made by GeoTool may be used with a metal box if desired; see: www.geotool.com.

If you don't wish to build the- amplifier yourself, you can buy one or two from Kiwa Electronics.

At least one person has claimed that noise reducing antennas are noisy. But when I quizzed him about his implementation, it turned out that he had not implemented the antenna correctly. If you do not follow the instructions, then you may end up with a noise increasing antenna like he did

Although I have retired my active whips, there still seems to be a place for a high performance LW – MW – SW active whip antenna, such as for phased arrays at temporary locations, or as a compact substitute for the 15 foot noise reducing antenna above.

Revised Simplified complimentary Push-Pull Output Active Amplifier For Active Whip Antennas With Simple llP2 Adjustment

Dallas Lankford, 12/7./07 rev. 7/10/09

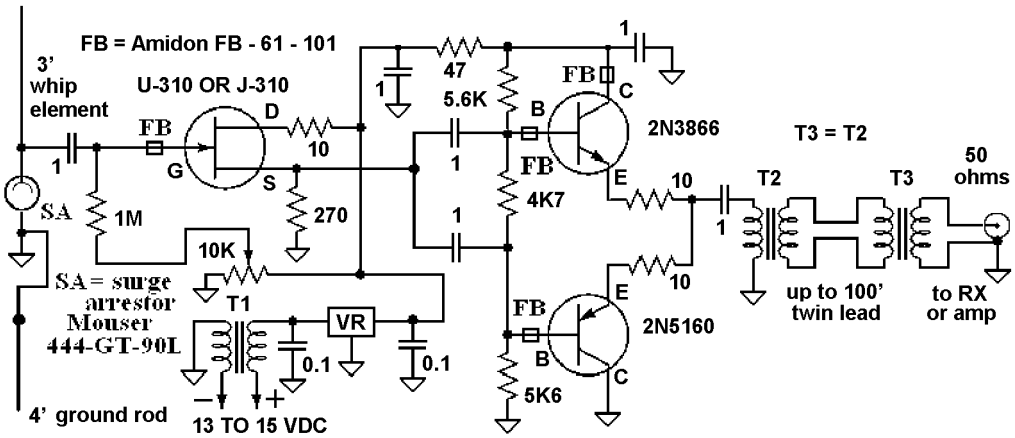

T1 = 30 bifilar turns #22 enameled copper wire on insulated Amidon FT-114-J.

T2 = 8 bifilar turns #24 enameled copper wire on insulated Amidon FT-50- 75.

VR = 12 volt 1 amp low dropout voltage regulator, Mouser 511-L4940V12.

**********+**********

10 Ohm resistors Should be 1% all other resistors 5% or better, adjust 10K: ohm pot for 0.200 voltage across 10 ohm resistor using 2% accuracy or better DVM.

****

While this method of adjusting llP2 is not ideal, it does has the advantage of being simple. A 12 volt voltage regulator is used to establish a constant DC supply voltage because IIP2 of the active whip is sensitive to changes in its DC supply voltage. A number of FET's were installed one at a time in a given active whip circuit and several parameters for each of the FET's was measured. No components other than the FET's of the whip were changed. A 10 ohm 100 resistor was inserted in series with the FET drain to simplify measuring the total FET current. The FET current was found to be the most accurate measure of llP2. For U-310's maximum llP2 was 19.5mA $\pm$ 0.1mA. (0.195 $\pm$ 0.001 DC). For Motorola J-310's maximum llP2 was 20.0 mA $\pm$ 0.1 mA. For Fairchild J-310's maximum llP2 was 20.7mA $\pm$ 0.1 mA. Measurements were made with a DVM having 2% accuracy. The voltage regulator output was measured as 12.04 VDC*. The 511-L4940V12 regulator is rated as 12.00 $\pm$ 0.25VDC'. We picked 0.200 V'DC as the adjustment voltage because it is all approximately the mean of the voltages we measured.

Yon can use the voltage for the particular FET yon use. However our sample was not large enough to determine if that is a better strategy. (*but 11.86 is another example)

Low Noise Active Antennas AC/DC Power Supplies

Dallas Lankford, 11/26/06, rev. 2/17/07

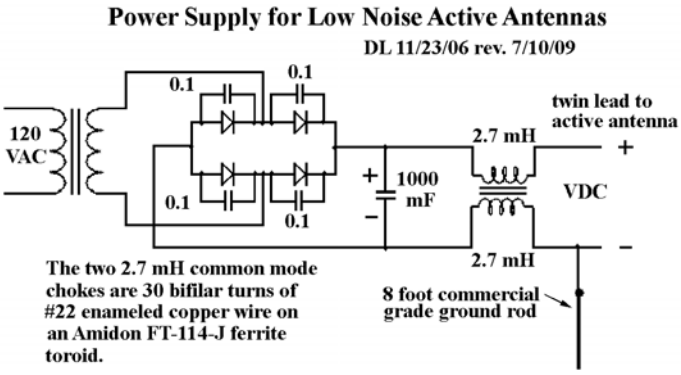

By using battery power it can be shown that AC/DC power supplies for active antennas often introduce noise into the signal path. With the power supplies I have used the noise usually begins in the NDB band and increases in intensity as frequency decreases. For some AC/DC power supplies the noise begins in the MW band and may even begin in the SW bands. This noise and the difficulty of eliminating it are the main reasons I have not used active antennas in the past as my main antennas.

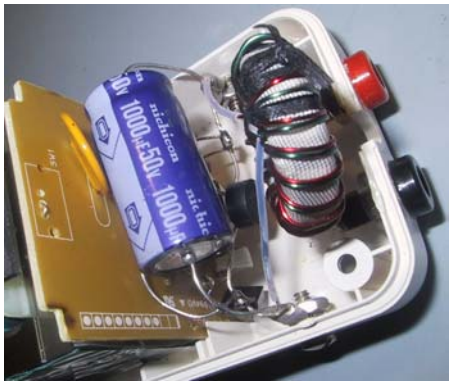

Common mode chokes often eliminate the noise in active whips due to AC/DC power supplies and other reasons for MW and higher frequencies; see "Some of my favorite small antennas for MW and LW" in The Dallas Files. For active antennas I have used common mode chokes both at the antenna, as shown in the article above, and at the power supply, as shown in the schematic here. However, common mode chokes alone usually are not sufficient to eliminate noise due to AC/DC power supplies for the lower NDB band and VLF band. For several AC/DC power supplies I tried much larger common mode chokes, as large as 1 Henry, but obtained no additional reduction in noise over the 2.7 mH specified in the schematic above

Recently I bought a Radio Shack # 273-1690 18/24 volt AC-AC adapter, thinking I was buying an AC/DC adapter. Fortunately, there was adequate space inside to convert it to a AC/DC supply, which I did. I used the 18 VAC output (1.4*18 = 25.2 VDC nominal, 25.7 VDC measured, which is close enough to 24 VDC), a 100 volt 1.4 amp full wave bridge rectifier Radio Shack # 276-1152, and a 1000 mF 50 volt electrolytic capacitor. Talk about noisy. The noise started at the low end of the MW band and increased as frequency decreased. Bypassing the negative DC lead to the AC neutral lead moved the beginning of the noise down into the middle of the NDB band, about the same as for other AC/DC power supplies I have used with active antennas. But again, using a larger common mode choke did not reduce the noise further.

I happened to mention this noise problem to Terry Fugate, who advised me to parallel each diode of the bridge with a 0.1 capacitor. And he sent along a reference from which I quote from as follows. ***I have also run into that*** [noise] ***problem*** [...] ***on LW. The mechanism that causes all of that noise is the rectifier diodes. If you use diodes that have a long minority carrier lifetime, no problem, but with the faster diodes that are being used nowadays, it sounds as if florescent lights are running, once you get below 600KHz. The cure is quite simple; I have posted it on this NG*** [rec.radio.shortwave] ***before. First of all, you need to connect .01uF capacitors across each of the rectifier diodes, so that they do not rectify RF.***

Next, you need to bypass each leg of the secondary of the power transformer with a 1uF non-polarized capacitor; a mylar or polyester would do fine. This will give you a power supply that is quiet, all the way down to 10KHz or so. I have done this mod on the power supplies for the Yaesu FRG-100, the ICOM R75, the AOR3030, the AOR7030, the Palstar R30, the Collins KWM-380, and even that old Radio Shack long range AM receiver that was sold in the 70s. Doug DeMaw gets the credit for bypassing those power supply diodes; I came up with the idea for bypassing the power transformer secondary. Pete KE9OA.

I modified my AC/DC power supply as Terry recommended , using 0.1 caps across each diode of the bridge as shown on the schematic above, and low and behold most of the noise was gone. Next I unsoldered the secondary bypass to AC neutral in order to evaluate that part of the mod. Curiously, bypassing the secondary to the AC neutral seemed to increase noise slightly, so I removed that part of the mod. Some additional noise reduction was obtained by grounding the negative DC lead on the antenna side of the power supply common mode choke to an 8 foot commercial grade ground rod.

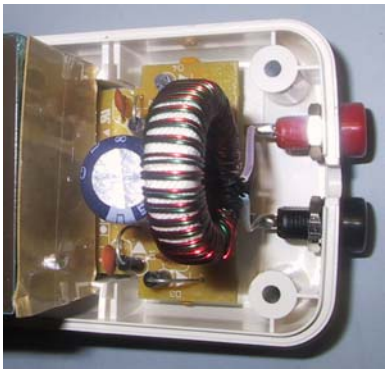

I intended to use the 9 VAC part of a dual 9/12 VAC radio shack transformer for a 12 VDC transformer (1.4*9 = 12.6 VDC nominal), but my local Radio shack did not have any. So I used a 12 volt AC/DC # 273-1776. It used individual rectifiers for the full wave bridge and a PC board which made it relatively easy to modify using small 1 mF 50 volt ceramic capacitors as shown in the photo here. The capacitors and their leads do not touch the PC board traces, but are about 1/32 inch above the trace surfaces which leaves adequate clearance between the bottom of the PC board and the inside bottom of the case. It turned out that the diodes in this power supply were not noisy like the diodes in the bridge I used for the 24 VDC supply because bypassing them with the 1 mF capacitors did not reduce noise at the lower end of the NDB (there was very little excess noise to begin with). Also, the dual 2.7 mH common mode chokes did not reduce noise at the low end of the NDB band either (again, there was very little excess noise to begin with). However, grounding the negative DC lead with an 8 foot commercial grade ground rod did reduce noise at the low end of the NDB band. I considered omitting the common mode chokes in the 12 VDC supply,. but decided to include them in case common mode noise makes its way into my house from the outside. On both power supplies I used insulated banana jacks, Radio Shack # 274-725B. The flimsy two wire (white) DC power cords of both power supplies were removed and discarded. The PC board solder pads where the DC power cords were removed were used for the mods. Banana plugs were used to connect the twin lead power feed of the active antennas to the power supplies banana jacks. Two photos of the 24 volt AC/DC power supply are included above.

While testing the low noise 12 VDC power supply about 2345 on 11/25/06 using my relatively new active whip (see below) I came across 183 kHz Felsberg, Germany in French relaying Europe 1 from Paris. The 183 kHz 2 relay of Europe 1 is uncommon here and almost never produces any understandable audio. So it was a first for me to hear it producing clear audio.

I switched over to my 45 foot noise reducing vertical and got another surprise; there was hardly any clear audio from the big antenna... business as usual. Just for fun I gave my ALA 100 clone a shot at

183 Europe 1; nope, no audio at all. I switched back and forth among the three antennas multiple times and got virtually identical results every time. After 183 closed down just after 0000, I tuned down to 162 Allouis, France. They are also uncommon here, rarely producing understandable audio. But on the whip they produced excellent audio, just beautiful, while the 45 foot vertical was very poor, and the ALA 100 clone was only slightly less poor. The receiver used was a modified IC-746 Pro using a 3.6 kHz BW and ECSS, USB or LSB depending on which had less interference, with the automatic notch engaged.

Even though the active whip was only a few meters away from the 45 foot noise reducing vertical and ALA 100 clone, the active whip placement turned out to be the reason it produced clear audio while the larger antennas did not. However, without the modified AC/DC power supply, even with the lucky placement I doubt the active whip would have produced any audio at all from 183 Germany and 162 France. Listeners on the ECNA, and especially New England, probably hear these signals most every evening, and often like locals. So they may not care whether their active whip antenna power supply is low noise. But I do because hearing these LF signals clearly in North Louisiana is a rare occurrence, and would not occur here on an active whip without a low noise AC/DC power supply.

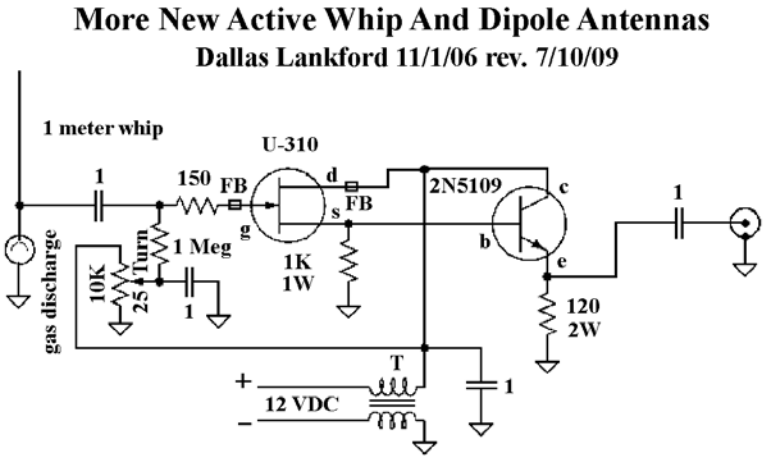

Here is a relatively new 12 volt whip / dipole which I used to evaluate the 12 VDC AC/DC power supply mods described above. Some might consider the 3rd order intercept somewhat low, at about 34 dBm, but the 2nd order intercept is quite good, about 69 dBm. Also, this one uses a common and inexpensive U-310 FET, and no transformers for the whip. For a dipole, build a second whip,. oppose the whips, and join the two outputs with a 1:1 balun. This version is shown with coax output, but I always use a 1:1 balun and twin lead. If you use coax for the signal lead-in, you may need to use a common mode choke on the coax The 25 turn pot is adjusted for minimum 2nd order intermod. This occurs at about 60 mA current drain for the 2N5109, so a heat sink is advisable. The U-310 draws about 18 mA, and while it runs quite warm to the touch, a heat sink is not really necessary for it. I used separate 1 mH common mode chokes for T instead of a 2.7 mH bifilar choke. The 24 VDC AC/DC power supply mods were evaluated using an ultra high intercept whip (+50 / +100 dBm II3 / II2) which I have agreed not to disclose.

Continuing the antenna comparisons the next day on MW groundwave signals, the active whip man made signal to noise ratio was often not quite as good as the 45 foot noise reducing vertical. For one signal, the 45 foot vertical produced clear audio, while the whip produced mostly noise. The ALA 100 clone signal to man made noise ratio was often not quite as good as the active whip, but on a few signals was better, due to the ALA 100 clone nulling local man made noise. On a few other signals the ALA 100 clone produced no audio at all compared to clear audio produced by the whip, due to the ALA 100 clone null being pointed at the desired signal, which illustrates one disadvantage of a large air core loop. The bottom of the whip for these comparisons was 2 meters above the ground. Placing the whip at a higher location might improve its signal to man made noise ratio. We will see.

As a result of these experiences I have revised my opinion of active whips. When used with a low nose AC/DC power supply, they are quite respectable, and with some placements and at some frequencies are superior to full size antennas.

Receiver noise figure sensitivity and dynamic range - what the numbers mean

From Ham Radio Magazine October 1975 Author: James R. Fisk, W1DTY (SK),
Ham Radio ceased publication in 1990 Repaginated and edited by Perry Sandeen Sept. 2008

A complete discussion of receiver sensitivity, intermoduation distortion, and gain compression, and what they mean in terms of performance

When it came to receivers, the earliest amateur operators were concerned primarily with sensitivity and experimented almost endlessly with different types of crystals, trying to find the one that was the most sensitive. Then came DeForest's Audion, and Armstrong's regenerative detector, and amateurs who could afford the tubes found they had all the sensitivity they could use. However, as the hobby grew, and more and more amateurs started populating the band below 200 kHz, the simple regenerative detector simply wasn't up to the task. Selectivity, with simple tuned input circuits, was practically nonexistent, and the regenerative detector hopelessly overloaded in the presence of strong signals.

In the early 1920s amateurs worked to improve their tuners, but even the so-called "Low-Loss" tuners were only marginally acceptable. Although several superheterodyne designs were described in the amateur magazines, it wasn't until low-cost, commercial i-f transformers became available in the late twenties that the superhet saw widespread amateur use. Selectivity against interfering signals was still a problem, however, and James Lamb revolutionized receiver design in 1932[1] with his "single-signal" CW circuit which used an i-f stage with extremely high selectivity - provided by regeneration or a simple crystal filter.

The single-signal, single-conversion superhet of the late 1930s suffered from poor RF image response at the higher frequencies, but it wasn't too severe on 14 MHz and few amateur receivers of the day, in fact, tuned much above 18 or 20 MHz (15 meters was not yet assigned to amateur use and most 10-meter operators used specialized receivers or converters). When the 10- and 15-meter bands opened up after the war, however, the poor RF image response of the single - conversion superhet with a 455-kHz i-f had to be faced - it was solved by going to a double-conversion layout with a first conversion to 2 or 3 MHz to minimize RF image response, and a second conversion to 455 kHz or lower for adjacent channel selectivity.

Although amateur radiotelephone operation in the 1930s was relatively limited, the huge growth of a-m activity after the war demanded improved adjacent-channel phone selectivity. While the crystal filter provided excellent selectivity for CW operation, it was of little or no use on a-m or ssb and some phone operators started using a Q5er an outboard 80-kHz i-f strip - for improved phone selectivity. This led to the triple-conversion superhets which were the rage of the 1950s.

As pointed out by Goodman[2], however, the multiple-conversion design had many shortcomings, including high-selectivity i-f which made it practically impossible the large number of stages between the antenna and the to attenuate strong, adjacent signals.

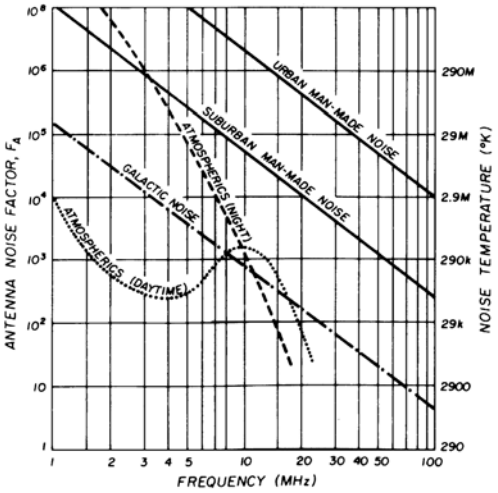

fig. 1. Receiver sensitivity is limited by the external available noise power which varies with frequency. For quiet, rural locations galactic noise is the limiting factor down to about 18 MHz, and atmospheric noise dominates below 18 MHz.

And, with at least three oscillators running at the same time, it was difficult to avoid the many spurious signals which were generated within the system. He advocated a return to the single-conversion superhet using highly-selective, high-frequency, crystal lattice filters which were just then becoming commercially available.

The 1960s saw a return to single conversion designs, the use of high frequency, crystal-lattice filters and the widespread use of semiconductors. With modern devices receiver sensitivity was no longer limited by the RF amplifier (or mixer) stage, but by the external galactic and man-made noise. Cross modulation and overload, on the other hand, were becoming a serious problem as more and more amateurs started using high-power Iinears and large, directive antennas.

Modern communications receivers, therefore, in addition to meeting stringent frequency accuracy, stability, sensitivity, and selectivity requirements, must provide freedom from cross modulation, intermodulation distortion and blocking. Some modern, solid-state solutions to these design goals were discussed recently by Rohde[3].

The specifications for a typical modern communications receiver might list sensitivity of 0.5 µV for 10 dB signal plus-noise-to-noise (S+N/N) ratio, intermodulation distortion of -65 dB, "wide" dynamic range, and "virtual elimination" of overload from adjacent signals.

However, is 0.5 µV sensitivity for 10 dB S+N/N adequate for operation on the high-frequency bands? For satellite communications on 10 meters? What is - 65 dB intermodulation distortion in terms of signal strength? "Wide dynamic range" and "virtual elimination of overload" are obviously advertising superlatives without definition but what, exactly, can you expect from a high quality, modern receiver design? Perhaps, if these performance data were defined, and amateurs understood what they meant, manufacturers would be encouraged to use no-nonsense numerical data. Only then can amateurs compare the dynamic range and cross-modulation performance of one receiver against that of another.

sensitivity

The minimum usable signal or sensitivity of a receiver is determined by the noise in the receiver output. This can be noise generated within the receiver, thermal noise generated by losses in the transmission line, or atmospheric, manmade or galactic noise picked up by the antenna. As shown in fig. 1, external noise sources are likely to be the limiting factor up to 100 MHz or so.[4] In urban areas man-made noise predominates and measurements indicate the average level of man-made noise in suburban areas is about 16 dB lower. In a quiet, rural location which has been chosen with care the man-made noise may be near the galactic noise level, but few amateurs are so fortunate.

Atmospheric noise usually predominates in quiet locations at frequencies below about 20 MHz and is produced by lightning discharges so the level depends upon a number of variables including frequency, weather, time of day, season and geographical location. This type of noise is particularly severe during rainy seasons near the equator and generally decreases at the higher latitudes. More complete data on high-frequency atmospheric noise is given in reference 5.

Galactic or cosmic noise is defined as RF noise caused by disturbances which originate outside the earth or its atmosphere. The primary causes of this noise, which extends from 15 MHz well into the microwave region, are the sun and a large number of noise sources distributed chiefly along the Milky Way. Solar noise can vary as much as 40 dB from "quiet" sun levels (low sunspot activity) to periods of "disturbed" sun (high sunspot activity).

Galactic noise from the center of the Milky Way is about 10 dB below the noise from a "disturbed" sun, whereas noise levels from other parts of the galaxy can be as much as 20 dB lower. This is important in satellite communications and will be discussed later.

thermal noise

The free electrons in any conductor are in continuous motion - motion that is completely random and is the result of thermal agitation. The effect of this electron motion is to cause minute voltages which vary in a random manner to be developed across the terminals of the conductor.

$$e^2 = 4kTBR \qquad (1)$$

where e2 = mean square noise voltage
k = Boltzmann's constant = 1.38 X 10^{-23} joules/o K
T = absolute temperature, ° K
B = bandwidth, Hz
R = resistance, ohms

Since this phenomenon was first demonstrated by J. B. Johnson in 1928[6], thermal noise is sometimes known as Johnson noise. At the same time, H. Nyquist showed, on the basis of the statistical theory of thermodynamics, that the mean square noise voltage generated in any resistance can be expressed as [7]

Note that the noise voltage is dependent upon the bandwidth across which it is measured. This implies that noise is evenly distributed across all frequencies which, for all practical purposes, it is. *

> *** At extremely high frequencies statistical mechanics is no longer valid, and eq. 1 must be revised on the basis of quantum theory. This equation is valid, however, to at least 6000 GHz.[8]**

Although noise bandwidth is not precisely the same as the 3-dB bandwidth of a receiver, in modern receivers with high skirt selectivity the 3-d B bandwidth can be used in **eq. 1** with little error.

The equivalent circuit of any impedance as a source of noise voltage is shown in **fig. 2A**. Note that the thermal noise voltage is dependent only on the resistive component and is independent of any reactance in the circuit. As might be expected, maximum noise power is transferred from a thermal noise source when the load impedance presents a conjugate match to the source impedance . This is represented in fig. 28 where the load resistance, R_L, is equal to the source resistance Since R = R_L, the noise voltage developed across the load is e/2, and from Ohm's law:

$$P = \frac{E^2}{R} = \frac{(e/2)^2}{R} = \frac{e^2}{4R} \ watts \qquad (2)$$

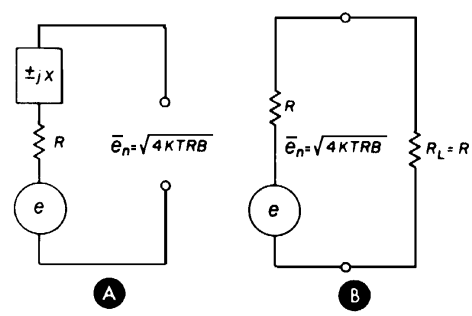

Fig. 2. Mean noise voltage depends on temperature, resistance and bandwidth, and is completely independent of reactance as shown in (A). Maximum noise power is transferred to the load when the load resistance is matched to the source resistance (B).

Substituting the value of e2 from eq. 1 into eq. 2, the power which can theoretically be transferred under such conditions is called the available noise power and is given by

$$P_n = kTB \qquad (3)$$

The factor of ***4R*** has cancelled out so the available noise power does not depend upon the value of the resistance. This is significant because it means that the available noise power of any resistor (or any noise source), if measured over the same bandwidth, can be represented by a resistor at temperature T. Thus, every noise source has an equivalent noise temperature.

The actual noise power dissipated in the load resistance may be affected by loss in the connecting leads, noise power generated in the load resistor itself, or a less than perfect match to the original resistance. This property is sometimes used in low-noise uhf amplifiers by creating a deliberate (but carefully determined) mismatch between the input termination and the detection device so that something less than the available termination noise power is coupled into the detector.

signal-to-noise ratio and receiver noise figure.

The relation of signal amplitude to noise is commonly referred to as the signal-to-noise (S/N) ratio. Unfortunately, this ratio has not been well standardized and is often used interchangeably to mean the ratio of rms signal voltage to rms noise voltage, the ratio of peak signal voltage to peak noise voltage and, in pulse systems, the ratio of peak signal power to average noise power. Therefore, when discussing SIN ratio, it's important to determine exactly which ratio is being referred to.

Although the minimum discernible signal (MDS) that can be heard above the receiver noise level is sometimes used as an indication of receiver sensitivity, it is extremely subjective because it differs many dB from measurement to measurement, and from one operator to another (some experienced weak-signal operators can detect signals as much as 20 dB below the noise level while other operators may have difficulty discerning signals which are equal to the noise level).[9]

Receiver sensitivity has also been defined in terms of a signal-to-noise ratio of unity (signal equals noise)* or equivalent noise floor, but this is difficult to measure unless you have a calibrated signal generator and a spectrum analyzer.

***This is sometimes erroneously referred to as tangential sensitivity. Tangential sensitivity, however, corresponds to a signal-to-noise ratio of 6.25 and is about 8 dB higher.[10]**

Noise figure or noise factor, on the other hand, is less susceptible to measurement errors than sensitivity and, since its introduction in 1944 by Friis,[11] it has become the accepted figure of merit for receiver sensitivity. Noise figure, NF, is simply noise factor, F, expressed in dB.

$$NF = 10 \log F \text{ (dB)} \qquad \textbf{(4)}$$

The concept of noise factor allows the sensitivity of any amplifier to be compared to an ideal (lossless and noiseless) amplifier which has the same bandwidth and input termination. As far as noise is concerned, that part of a receiver between the antenna and the output of the i-f amplifier can be regarded as an amplifier. The fact that the mixer stage shifts the frequency of the noise does not change the situation – it merely causes the noise to lie in a different place in the spectrum from the input noise. The only exception is when the receiver has poor RF image rejection. In this case the noise figure of the receiver is 3 dB worse than it would be if the same receiver had good RF image rejection because the image noise appears at the output along with noise associated with the desired received frequency. This effectively doubles the noise at the output of the i-f amplifier.*

The noise factor, F, of a receiver is defined as:

$$F = \frac{S/N\ (ideal\ receiver)}{S/N\ (practical\ receiver)} = \frac{S_i/N_i}{S_o/N_o} \qquad \textbf{(5)}$$

S_i = available signal input power
N_i = available noise input power
S_o = available signal output power
N_o = available noise output power

Using this definition, it can be seen that an ideal receiver adds no noise to a signal so its output signal-to-noise ratio is the same as that at the input and the noise factor, $F = 1$.

***The noise figure is always defined at the input of the final detector(i-f output) because the noise output of a detector (but not of a mixer) is affected by the presence of a signal. An fm signal, for example, will suppress weak noise but will be suppressed itself by strong noise.**

Since the available noise input power, N_i is defined as $kToB$ in **eq. 3**, and the power gain of the system $G = S_o/S_i$, eq. 5 can be rewritten as

$$F = \frac{N_o}{GkT_oB} \qquad \textbf{(6)}$$

Where T_o is 290^0 kelvin (IEEE definition). With the receiver noise factor defined in terms of noise output power, N_o, power gain, G, and noise input power, kT_oB, noise factor can be easily correlated to receiver sensitivity. Consider the case where the output signal to-noise ratio, $\boldsymbol{S_o/N_o}$, is unity.

$$\boldsymbol{S_o = N_o}$$

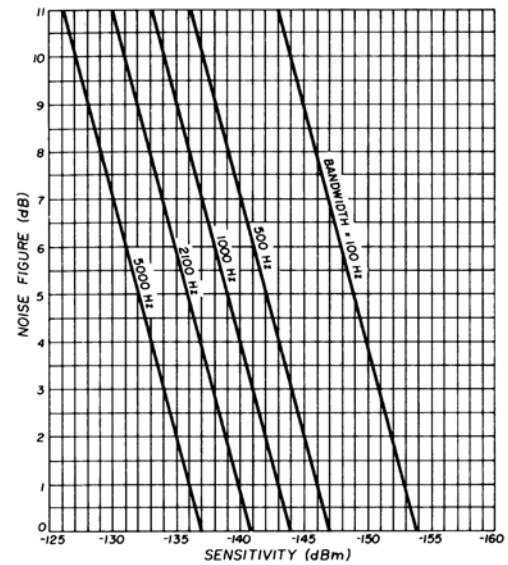

Fig. 3. Receiver sensitivity (-dBm) vs receiver noise figure and bandwidth for unity signal. to-noise ratio (signal equals noise). Add 10 dBm for a SIN ratio of 10 dB. Table 1 lists microvolt sensitivity for 50- and 75-ohm systems in terms of dBm sensitivity.

For this specialized case, eq. 6 can be rewritten

$$F = \frac{S_i}{kT_oB} \qquad \textbf{(7)}$$

When the temperature is 290^0 K and the bandwidth is in kHz, $kT_oB = 4 \times 10^{-15}$ mW per kHz. Rewriting **eq. 7** in terms of dBm (dB referenced to 1 mW)

$$\boldsymbol{S_i = 10 \log kT_0 + 10 \log B + NF = -144 + 10 \log B_{kHz} + NF \text{ (dBm)}} \qquad \textbf{(8)}$$

This function is plotted graphically in **fig. 3** for bandwidths commonly found in amateur communications receivers . For example, assume a high-frequency receiver has an 8 dB noise figure at 14.2 MHz and a bandwidth of 2.1 kHz. From **eq. 8** or **fig. 3**, the noise floor of the receiver at 14.2 MHz is at about -133 dBm. An input signal of -123 dBm (10 dB greater) would be required for a 10 dB SIN ratio.* To convert dBm to microvolts, recall that:

$$\boldsymbol{E} = \text{the square Root of } \boldsymbol{RP} \qquad \textbf{(9)}$$

where E is in volts, R is resistance in ohms and P is power in watts. Since -123 dBm is 5.01×10^{-16} watts, -123 dBm is equivalent to 0.16 µV *across* a 50-ohm input termination. However, for a matched signal source, as shown in **fig. 4**, where the source resistance, R_s, is equal to the load resistance, R_L the source voltage must be twice the voltage across R_L because of the voltage dividing effect of the two series resistors in the network. For a matched 50-ohm source, therefore, an input signal of -123 dBm requires a source voltage of 0.32 µV. A chart of dBm vs microvolts for matched 50- and 75-ohm systems is presented in **table 1**.

*This is the signal-to-noise ratio in ssb and CW reception. The SIN ratio of a-m and nbfm signals is somewhat less because a-m (and nbfm) detection use only the envelope as a useful output and the SIN ratio must be reduced by a factor which is related to percentage of modulation (or modulation index).

Because of this two-to-one voltage dividing effect, you must be very careful when comparing the sensitivity of one receiver against that of another. An input of +119 dBm, for example, implies an input directly at the receiver terminals and is 0.25 µV rms across 50 ohms. Sensitivity, on the other hand, implies the use of a matched signal generator so sensitivity of 0.25 µV corresponds to an input of -125 dBm.

This is a 6 dB difference. Since most amateur receiver manufacturers tend to use sensitivity specifications, there is no advantage, but the difference must be considered when you calculate the receiver noise figure and dynamic range. I n this article inputs will be stated in dBm as this eliminates the 6 dB conversion factor - **table 1** can be used to convert to *sensitivity*.*

cascaded stages

A relatively simple equation for the noise factor of a receiving system, in terms of the individual stage gains and noise factors is

$$F_T = F_1 + \frac{F_2 - 1}{G_1} + \frac{F_3 - 1}{G_1 G_2} \qquad \textbf{(10)}$$

F_T = overall system noise factor
F_1 = noise factor of the first stage
F_2 = noise factor of the second stage
F_3 = noise factor of the third stage
G_1 = power gain of the first stage
G_2 = power gain of the second stage
G_3 = power gain of the third stage

µV dBm 50 ohms		µV 75 ohms		P.V µV dBm 50 ohms	75 ohms
-76	70.8	86.7	-111	1.26	1.54
-77	63.2	77.4	-112	1.12	1.38
-78	56.2	69.1	-113	1.00	1.23
- 79	50.2	61.5	-114	0.90	1.09
- 80	44.8	54.9	-115	0.80	0.97
- 81	39.8	48.7	-116	0.71	0.87
- 82	35.6	43.6	-117	0.63	0.77
- 83	31.6	38.7	-118	0.56	0.69
- 84	28.2	34.5	-119	0.50	0.62
- 85	25.2	30.9	-120	0.45	0.55
- 86	22.4	27.4	-121	0.40	0.49
- 87	20.0	24.5	-122	0.36	0.44
- 88	17.8	21.8	-123	0.32	0.39
- 89	15.8	19.4	-124	0.28	0.35
- 90	14.2	17.3	-125	0.25	0.31
- 91	12.6	15.4	-126	0.22	0.27
- 92	11.2	13.8	-127	0.20	0.25
- 93	10.0	12.3	-128	0.18	0.22
- 94	9.0	10.9	-129	0.16	0.19
- 95	8.0	9.7	-130	0.14	0.17
- 96	7.1	8.7	-131	0.13	0.15
- 97	6.3	7.7	-132	0.11	0.14
- 98	5.6	6.9	-133	0.10	0.12
- 99	5.0	6.2	-134	0.09	0.11
-100	4.5	5.5	-135	0.08	0.10
-101	4.0	4.9	-136	0.071	0.087
-102	3.6	4.4	-137	0.063	0.071
-103	3.2	3.9	-138	0.056	0.069
-104	2.8	3.5	-139	0.050	0.062
-105	2.5	3.1	-140	0.045	0.055
-106	2.2	2.7	-141	0.040	0.049
-107	2.0	2.5	-142	0.036	0.044
-108	1.8	2.2	-143	0.032	0.039
-109	1.6	1.9	-144	0.028	0.035
-110	1.4	1.7	-145	0.025	0.031

Table 1. Microvolt sensitivity vs dBm for *matched* 50- and 75-ohm receiving systems.

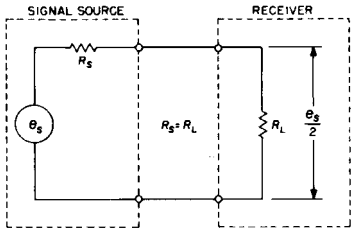

fig. 4. When a signal source is matched to a load, the voltage across the load is one-half the source voltage because of the voltage. dividing effect of the source and load resistors. When making receiver sensitivity measurements in the laboratory. a G-dB attenuator is placed in the line so sensitivity can be read directly from the signal generator's internal calibrated attenuator.

fig. 5. Noise factor of cascaded stages can be calculated by using equation 10 where all quantities are in power ratios. Noise factor at the input of the three cascaded stages shown here is 1.946 (noise figure = 2.9 dB).

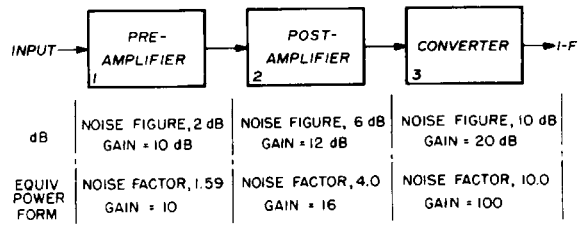

Note that all terms are in power ratios. If the gain of the first stage is high, and the noise factor of the second stage is low, the overall system noise factor is determined primarily by the first stage and the third term of **eq. 10** may be dropped.

For example, consider the block diagram of the first three stages of a typical vhf receiving system shown in **fig. 5**. The overall system noise factor is:

$$F_T = 1.59 + \frac{4-1}{10} + \frac{10-1}{10 \cdot 16}$$

$$= 1.59 + 0.3 + 0.056 = 1.946$$

$$NF_T = 10 \log 1.946 = 2.9 \text{ dB}$$

For this receiver the overall system noise figure is 0.9 dB higher than that of the preamplifier alone. Raising the preamplifier gain to 13 dB or dropping the noise figure of the second stage to 4 dB (F = 2.5) would reduce the system noise figure to approximately 2.45 dB (F = 1.75). Depending on the frequency and the application, this may be a worthwhile improvement.

noise temperature

It is often convenient when working with very low noise uhf and microwave receivers to represent the noise figure of the receiver as an equivalent noise temperature. This is because the noise temperature of a receiving system varies over the range from 0^0 to 174^0 K as the noise factor varies from 1.0 to 1.6 (0 to 2 dB noise figure) and noise calculations using equivalent noise temperatures will provide better accuracy.

As mentioned above, the noise figure of an ideal receiver is 1, so the component of receiver noise figure which is due to internally generated noise, N_r, is $F - 1$. Therefore $N_r = (F - 1)\, GkT_oB$ **(11)**

The internally generated noise, N_r, can be represented by a noise power, GkT_rB, where T_r is the equivalent noise temperature. Substituting into **eq. 11**, this equivalent noise temperature can be expressed in terms of the reference noise temperature, T_o = 2900K. $T_r = (F - 1)\, T_o$ **(12)**

Eq. 12 can be easily rearranged to express noise factor as a function of the receiver noise temperature, T_r, and the reference noise temperature, T_o

$$F = 1 + \frac{T_r}{T_o} \quad \textbf{(13)}$$

Although noise temperature is seldom used by amateurs, it is a more basic unit than noise factor and is actually easier to deal with, both in understanding concepts and making practical noise calculations. For a more complete discussion of noise temperature, see reference 12.

*The usual procedure for measuring receiver sensitivity is to place a 6 dB attenuator between the signal generator and the receiver. Receiver sensitivity can then be read directly from the signal generator's calibrated output attenuator.

transmission lines

The transmission line's contributions to receiver noise come from a common source: line losses. The first of these is the more obvious. When a signal travels down a lossy transmission line, the signal is attenuated. This reduces the signal-to-noise ratio and is equivalent to increasing the noise factor of the receiver. This increase can be calculated by introducing a loss factor, L, which is the loss of the cable expressed as a power ratio.

The second effect is due to the noise factor of the transmission line. The fact that the line has losses implies that there is a loss resistance associated with it (which is distinct from characteristic impedance). Since the line is warm it generates noise due to thermal agitation.

The noise factor of the line, F_t, is related to the loss factor, L, and the physical temperature of the line, T_t, by the following equation:

$$F_t = \frac{\left(\frac{1}{L} - 1\right) T_t}{290} + 1 \qquad \textbf{(14)}$$

The degradation of the receiver noise figure due to transmission line contributions may be calculated by considering the transmission line and the receiver as cascaded stages and using a form of **eq. 10**

$$F_{tr} = F_t + \frac{F_r - 1}{L} \qquad \textbf{(15)}$$

where F_{tr} = noise factor of the receiver and transmission line
F_r = noise factor of the receiver
F_t = noise factor of the transmission line
L = loss factor of the transmission line

For example, a receiver with a noise factor of 4 (NF = 6 dB) is used with a transmission line which has a loss factor of 0.63 (2 dB loss). The physical temperature of the line is 300^0 K (Ft = 1.61). What is the combined noise figure?

When line losses are low but receiver noise figures are 3 dB or greater, line loss is the predominate contributor to increased noise figure. When receiver noise figure is very low, the thermal effect predominates.

$$F_{tr} = 1.61 + \frac{4 - 1}{0.63} = 6.37$$

$$NF_{tr} = 8.04\ dB$$

antenna noise

Of all the contributions to system noise, antenna noise is probably the least understood. Assuming the antenna is built of good conducting materials, it contributes virtually no thermal noise of its own to the receiving system. The noise power the antenna does deliver to the receiver depends almost entirely on the temperature and other physical characteristics of the material lying in the antenna's field of view.

Table 2

frequency	noise factor at antenna	noise figure	external available noise power	receiver input signal for 10 µV dB S+N/N	acceptable noise figure
1.8 MHz	15.8	12.0	- 93 dBm	15.3µV	45 dB
3.5 MHz	16.2	12.1	-101 dBm	12.6µV	37 dB
7.0 MHz	16.7	12.2	-111 dBm	4.0µV	27 dB
14.0 MHz	17.6	12.5	-113dBm	3.1µV	24 dB
21.0 MHz	18.3	12.6	-118 dBm	1.8µV	20 dB
28.0 MHz	18.9	12.8	-123 dBm	1.0µV	15 dB
50.0 MHz	20.9	13.2	-129 dBm	0.5µV	9 dB
144.0 MHz	26.9	14.2	-139 dBm	0.2µV	2 dB

Table 2 Performance of a receiver with 0.5 µV sensitivity for 10 dB S+N/N with 100 feet (30.5m) of RG 8 A/U transmission line is shown in first two columns. Third column lists external available noise power for quiet receiving locations on each of the amateur bands. Fourth column shows receiver signal (50-ohms) required for 10 dB S+N/N on each of the bands (based on external noise). Last column lists acceptable noise figure for each of the bands (see text). Bandwidth = 2.1 kHz.

A 432-MHz moonbounce receiving antenna looking out into space, for example, may deliver only as much noise power as a resistor at 10° K (noise factor = ".03). If this same antenna is rotated so that the warm earth comes into its field of view, the antenna noise temperature would rise to about 300° K (noise factor = 2).

A ten-meter Oscar receiving antenna which is pointed into "cold" space, on the other hand, will see a noise temperature of about 10,000^{0}K minimum (noise factor = 35). Pointed at the horizon, however, the antenna noise temperature may be ten or fifteen times higher, depending upon the amount of man-made noise.

There is little that can be done to improve the situation of a terrestrial radio circuit, but an antenna that looks at the sky, such as a satellite antenna, deserves careful design. This is because the effect of the earth is still present, and any sidelobe that sees the earth will pick up thermal noise. This is sometimes quite serious and sidelobes are of major concern in many deep-space communications and radio astronomy systems. Careful attention to antenna design with respect to sidelobes can provide antenna temperatures significantly under 50° K, while poor design can result in much higher values.

minimum usable sensitivity

With an understanding of receiver noise factor and its relationship to signal-to-noise ratio, it's now possible to determine the minimum usable sensitivity (MUS) of a receiving system, and how the performance of your own equipment affects your ability to receive weak signals. Let's first consider that modern communications receiver mentioned earlier which had a specified sensitivity of 0.5 µV for 10 dB S+N/N ratio.*

From table 1 a 0.5 µV sensitivity for 10 dB S+N/N is equivalent to a sensitivity of -119 dBm in a 50-ohm system (-129 dBm noise floor). Assuming a bandwidth of 2.1 kHz, the noise figure of the receiver is about 11.8 dB (noise factor = 15.1). Assuming 100 feet (30.5m) of RG-8A/U transmission line at 300^{0}K, the noise factor at the antenna terminals may be calculated from **eq. 15**, and is shown in **table 2** for the six high-frequency amateur bands, (calculated on the basis of 0.5 µV sensitivity for 10 dB S+N/N on all bands, which may be optimistic). Even at 28 MHz, where the line loss has increased the noise factor by 25 per cent, the system noise factor is still well below the available noise power seen by the antenna (see **fig. 1**).

At 50 MHz, however, the system is limited by receiver noise and a lower noise figure would be required for weak signal work (system noise at 50 MHz in this example is about 2.4 dB higher greater than external noise for a quiet location). If the receiver was connected directly to the antenna terminals to eliminate transmission line losses the system noise figure would be essentially that of the receiver alone and a 0.5 µV signal would provide the desired 10 dB S+N/N ratio. Although 100 feet (30.5m) of RG-8A/U coaxial cable has only about 1.35 dB loss at 50 MHz, it degrades the noise figure sufficiently that the system is no longer limited by external noise sources. This points up the importance of using low-loss transmission lines (or mounting a receiving preamp at the antenna).

Assuming a quiet, rural location that is limited primarily by galactic noise down to about 18 MHz, and atmospheric noise below 18 MHz, what is the minimum usable receiver sensitivity for terrestrial communications?

As can be seen from **table 2**, rather poor receiver sensitivity is acceptable on 40, 80 and 160 meters because the external noise at these frequencies is very high. This also explains why the simple receivers of the 1920s were relatively successful. The high external noise levels also make it possible to use rather inefficient receiving antennas on the lower frequencies.[13]

It's important to note that a 0.5 µV signal is of little practical use on 160, 80 or 40 meters because it would be buried in the noise level.

The required sensitivity on 20, 15 and 10 is not difficult to obtain with modern devices, but receivers which are optimized for the lower frequencies may not offer top performance on 10 meters. It should be pointed out that the "acceptable" noise figure in the last column of table 2, is somewhat arbitrary and is based on setting the receiver noise floor about 3 dB below the external noise floor. This is probably adequate 90 per cent of the time, but since noise varies randomly, a statistical analysis indicates there may be times when a lower noise figure may be desirable. However, it is generally agreed that a 10 dB noise figure is more than adequate up to 22 MHz and an 8-dB noise figure may occasionally prove useful on 10 meters. Why design a high frequency receiver for extraordinary sensitivity when its performance is limited by external noise over which you have no control? A very sensitive receiver is more prone to intermodulation and cross-modulation effects, and these may be more important.

At vhf the external noise levels are much lower and low-noise receivers are required for good weak-signal performance. Since it's relatively easy to build low-noise receivers for 50 MHz with modern semiconductors, there's no excuse for being limited by system noise figure on this band.

A receiver with a 5 dB noise figure at 50 MHz, for example, when used with 100 feet (30.5m) of RG-8A/U transmission line, will provide a system noise factor of 4.38 (NF = 6.4 dB) at the antenna terminals. This is well below the external noise.

The 144-MHz example in **table 2** is hopelessly inadequate and represents at least 12 dB degradation over what can be obtained in practice. A receiver with a 1.5 dB noise figure on this band, when used with the 100 feet (30.5m) of RG-8A/U, will provide a system noise factor of 2.54 (NF = 4.1 dB) at the antenna terminals which is still inadequate. A transmission line with 0.7 dB loss would bring receiver noise figure within acceptable limits, but it might be easier and less expensive to install a low noise preamp at the antenna.

As pointed out earlier, the noise temperatures of antennas that are pointed into space for satellite communications (or EME) are much lower than for terrestrial communications where the antenna is pointed at the horizon. This means that the receiver noise figures must be lower for maximum performance. Some parts of the sky are noisier than others due to the presence of noise sources, but the noise figure of the receiver should ideally be low enough that the system is galactic-noise limited. Following are the receiver noise figures to shoot for when designing receivers or converters for satellite communications on vhf.

These figures are based on a 2.1-kHz bandwidth and assume a lossless transmission line. For more accurate calculations at low noise figures, the use of noise temperatures is recommended.

frequency	galactic noise floor	noise figure
28 MHz	-125 dBm	8 dB
50 MHz	-130 dBm	5 dB
144 MHz	-139 dBm	1 dB
220 MHz	-140 dBm	0.7 dB
432 MHz	-141 dBm	0.2 dB

Although the topic of noise figure measurement is beyond the scope of this article, the simplest method of making the measurement is to compare receiver noise to the noise generated by a temperature-limited vacuum diode.

This technique is easily applied in the home workshop and has been discussed many times in the amateur radio magazines.14,15,16 Guentzler also described a noise measuring system which used a pilot lamp as a noise source.[17]

intermodulation distortion

Amplitude distortion occurs in an amplifier when the magnitude of the output signal is not exactly proportional to the input signal. Although amplifiers can be designed to be nearly perfectly linear over a portion of their operating range, every amplifier has nonlinearity which can cause distortion products or harmonics of the driving waveform. Intermodulation distortion or IMD is a type of amplitude distortion which occurs when a nonlinear amplifier is driven by more than one discrete frequency. Although the discussion here is limited to IMD in receivers, this is the same distortion which is used to define the linearity of ssb linear power amplifiers.

When an rf signal with varying amplitude is passed through a nonlinear device, many new products are generated. The frequency and amplitude of each component can be calculated mathematically since the nonlinear device can be represented by a power series expanded about the zero-signal operating point.18 Although many products are generated, the ones of primary concern are the second and third. This can be demonstrated with a two-tone signal with outputs at f_1 and f_2 at 14001 and 14003 kHz.

$f_1 = 14001$ $2f_1 = 2802$ $3f_1 = 42003$ $f_2 = 14002$ $2f_2 = 28004$ $3f_2 = 42006$

Although each of the harmonics fall well outside the passband of a receiver which is tuned to pass 14001 and 14002 kHz, the harmonics mix together to produce intermodulation products which do fall within the passband.

The third order products consist of: The fifth-order products consist of:

$2f_1 - f_2 = 14000$ kHz $2f_2 - f_1 = 14003$ kHz $3f_1 - 2f_2 = 13999$ $3f_2 - 2f_1 = 14004$ kHz

The output spectrum is shown in **fig. 6**. Unless the nonlinearity of the amplifier is particularly severe, fifth-order IMD is not usually a problem and can be ignored in receiver applications.

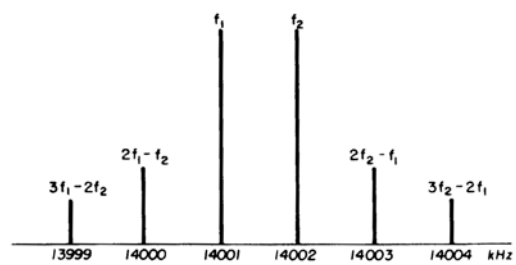

fig. 6. Third- and fifth-order intermodulation products generated by input signals at 14001 and 14002 kHz. In receiver stages fifth-order IMD is usually small enough to be neglected.

Although the IMD distortion products which are generated by two discrete frequencies are used here because they're easy to visualize, exactly the same sort of thing occurs with complex speech waveforms.

In a receiver rf amplifier or mixer stage IMD may be caused by two adjacent CW signals or by a ssb signal. Furthermore, in a mixer where the input must be wideband (such as the double-balanced mixer which is currently finding wide use). Two input signals, $f_{R\,1}$ and $f_{R\,2}$ may mix with the local oscillator (f_L) to produce in-band, two-tone, third-order intermodulation products $(2f_{R\,1} - f_{R\,2}) \pm f_L$ and $(2f_{R\,2} - f_{R\,1}) \pm f_L$. Third-order inter-modulation products also occur at $(2f_{R\,1} - f_{R\,2})$ and $(2f_{R\,2} - f_{R\,1})$.

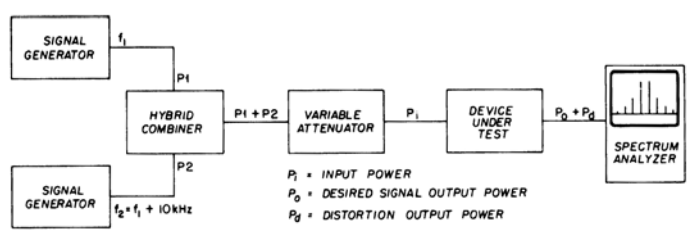

fig. 7. Block diagram of the test setup for evaluating the IMD performance of an amplifier or mixer with a spectrum analyzer.

Two input frequencies at 14210 and 14230 kHz, for example, with a 5.2-MHz local oscillator (9 MHz i-f). will produce two-tone, third-order intermodulation products at 8990 and 9050 kHz (i-f passband) and 14190 and 14250 kHz (rf passband).

Third-order IMD is measured in the laboratory with a spectrum analyzer using the test setup in fig. 7. However, the concept of the third-order intercept is finding increased use to describe the IMD response of mixers, and can also be used to describe the linearity of amplifiers.* The third-order intercept is the theoretical point where the two-tone, third-order response is exactly equal to the two-tone input. Amplifiers and mixers are not operated at this level in practice, but the intercept point offers an internationally recognized figure of merit for comparison of devices, both active and passive.

In addition, the intercept point permits comparison of amplifiers and mixers where the intermodulation specifications are given at different two-tone levels. Once the intercept point is known, you can calculate the two-tone, third-order response at any input level by simply remembering that every 1-dB change in the two-tone input produces a 3-dB change in the third-order output. With this information it is possible to predict the maximum rf input level which is allowable.

*Class A amplifiers. Linear class AB or B amplifiers often exhibit two-tone, third-order intermodulation products which follow an S-shaped curve that both increases and decreases with additional input signal level so they cannot be compared by the intercept point method.

With each 1 dB decrease in the IR input level, for example, the third-order product is decreased an additional 2 dB. As shown in **fig. 8**, a high-level double balanced mixer will suppress third-order products about 65 dB when both signals are at zero dBm (224 mV across 50 ohms) and 85 dB when both input signals are at -10 dBm (71 mV across 50 ohms). The third-order intercept point for these mixers is +27.5 dBm, relative to the output. Relative to the input, the intercept point is at +32.5 dBm. This is 17 dB higher than the intercept point for a low-level double-balanced mixer such as the Minilabs SR1A or Anzac MD108. The 3-dB compression point shown on the graph is a combination of both conversion compression and desensitization.

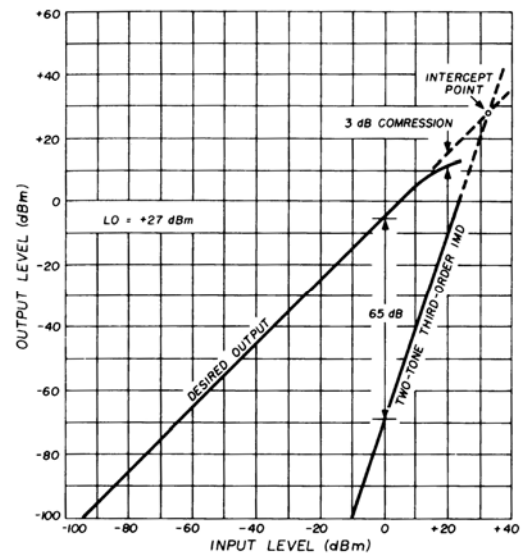

fig 8 Third-order intercept point of high level double balanced mixer (SRA 1H) at 50 MHz is +32.5 dBm relative to the input, 3 dB compression occurs at +20 dBm and third-order IMD is suppressed 65 dB when both input signals are 0 dBm (224 mV across 50 ohms).

intercept point

The third-order intercept point, IP, can be calculated from the relationship

$$IP = 1/2(P_o - P_d) + P_i \quad \textbf{(16)}$$

IP = third-order intercept, dBm
P_o = desired output, dBm
P_d = third-order distortion products, dBm
P_i = input power, dBm

Since the third-order IMD is defined as (P_o - P_d). eq. 16 can be rewritten as

$$IP = 1/2\ IMD + P_i \quad \textbf{(17)}$$

For the spectrum display shown in **fig. 9**, for example, the third-order inter-modulation distortion products with two input signals of 4 mV (-35 dBm) are 80 dB down, and the third-order intercept is *IP = 0.5 + 80 - 35 = +5 dBm.*

Most amateurs don't have spectrum analyzers, but if good intermodulation distortion information is provided on the receiver data sheet, the intercept point can be easily calculated with eq. 17 (in all too many cases, however, amateur receiver manufacturers ignore IMD completely, and when they do provide IMD data, it is incomplete).

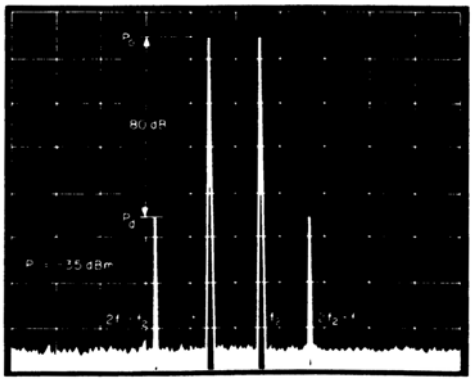

fig 9. Spectrum analyzer display of communications receiver shows IMD is 80 dB down with a two- tone input 0f –35 dBm (4 mV across 50 ohms). Intercept point is at +5 dBm.

How ever, assume the specifications for an amateur-band receiver list -75 dB IMD for an input of 1 mV (- 47 dBm). The third-order intercept is *IP=0.5 + 75 – 47 = -9.5dBm*

Once the intercept point is known, the IMD performance at any input level can be found by rearranging **eq. 17.**

$$IMD = 2(IP - P_i) \qquad \textbf{(18)}$$

For an intercept point of -9.5 dBm, for example, the IMD at various input levels is shown to the right.

input signal	IMD
100 µV (-67 dBm)	115 dB
500 µV (-53 dBm)	87 dB
1000 µV (-47 dBm)	75 dB
5 mV (-33 dBm)	47 dB
10 mV (-27 dBm)	35 dB

Compare this with the state-of-the-art receiver front end described on page 17 of this which has -74 dB IMD at an input of 100 mV (-7 dBm). The intercept point is at +30 dBm.

input signal	IMD
100 µV (-67 dBm)	194 dB
500 µV (-53 dBm)	166 dB
1000 µV (-47 dBm)	154 dB
5 mV (-33 dBm)	126 dB
10 mV (-27 dBm)	114 dB

The superiority of this receiver is ovious - for all but the strongest signals the IMD products are at or below the receiver noise level. Assuming a 10 dB noise figure and 2.1-kHz bandwidth, an input signal of -23.7 dBm (14.7 mV across 50 ohms) will produce IMD products just equal to the noise level. In the receiver with an intercept point at -9.5 dBm, however, the IMD products are already 3 dB greater than the noise with an input of -49 dBm (800 µV). This will be discussed further under the subject of dynamic range.

double-balanced mixers

Often a mixer data sheet does not specify the third-order intercept point, but a rule-of-thumb estimate can be easily made by examining the 1-dB compression point. As the rf input is increased, the i-f output should follow in a linear manner. However, after a certain point, the i-f output increases at a lower rate until the mixer output becomes fairly constant. The point at which the i-f output deviates from the linear curve by 1 dB is called the 1 dB compression point. At this point the conversion loss is 1 dB greater than it was when the rf input was smaller.

The importance of the 1-dB compression point is its utility in comparing the dynamic range, maximum output and two-tone performance of various double-balanced mixers. As a rule of thumb, the third-order intercept point is approximately 10 to 15 dB higher than the 1-dB compression point19 (about 15 dB at the low frequencies and 10 dB at higher frequencies). This is shown in **fig. 10**.

To properly use a double-balanced mixer, it is necessary to relate the two tone input and third-order output levels to avoid generating excessive distortion which would compromise the final design. This is equally valid for amplifiers. Also important, but not as obvious, is the effect higher operating frequencies have on the double-balanced mixer's two-tone, third-order distortion characteristics. Performance is usually better at the lower frequencies and drops off as frequency is increased. For typical high-frequency double-balanced mixers with a maximum frequency specification of 500 MHz, performance starts to fall off somewhere between 50 and 100 MHz.

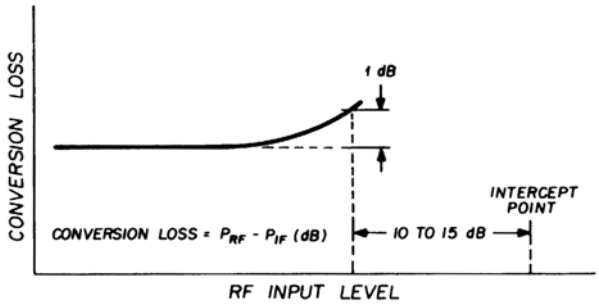

fig. 10. When working with double-balanced mixers, the third-order intercept point may be estimated by using the rule of thumb that the intercept point is 10 to 15 dB above the l-dB compression point (see text).

It is now possible, using a double balanced mixer in the front end, to build high-frequency communications receivers with a third-order intercept at +30 dBm. Using the rule of thumb that the 1-dB compression point is 15 dB below the intercept point, 1-dB compression occurs at an input of approximately + 15 d Bm or 1.25 volts across 50 ohms.

By comparison, the 1 dB compression point of many commercial amateur receivers is in the vicinity of - 20 dBm (22 mV across 50 ohms) and some solid state receivers with bipolar rf amplifiers go into compression at -40 dBm (2 mV across 50 ohms).

cross modulation

Another type of amplitude distortion which can occur in tuned amplifiers is *cross modulation*. This is related to IMD and is produced when the modulation from an undesired signal is partially transferred to a desired signal in the passband of the receiver. The 3.dB compression point in **fig. 8** describes the start of cross-modulation effects.

The cross-modulation effect is independent of the desired signal level and is proportional to the square of the undesired signal amplitude. Because of this relationship, an RF attenuator which lowers the signal level at the input to the receiver may provide a great improvement in cross-modulation performance. A 6 dB attenuator at the receiver input terminals, for example, will reduce cross modulation by 12 dB. If the desired signal is at least 6 dB above the level at which the receiver provides a satisfactory S/N ratio this results in a marked improvement in received signal quality.

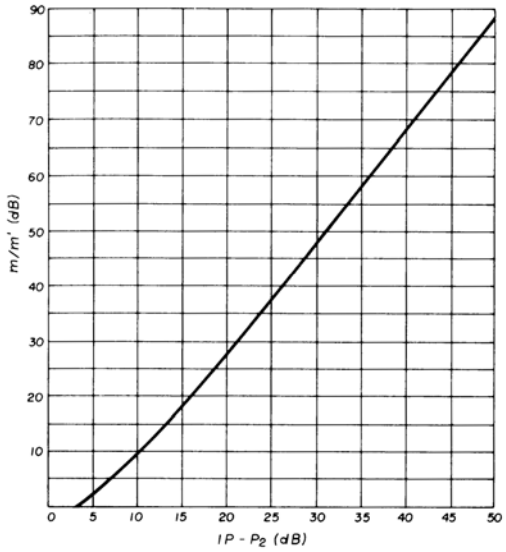

fig 11. Graph of cross modulation vs the ratio of the intercept point to the interfering signal level in dB.

Cross modulation is measured in the laboratory by setting one signal generator to deliver a CW output and another generator is set up for 30% amplitude modulation. The output of the a-m generator is increased until 1% modulation appears on the CW signal as measured with a spectrum analyzer. This represents a cross-modulation ratio of about 30 dB (cross-modulation level 30 dB below the reference level).

Cross modulation is related to the intercept point by the relationship $m/m^1 = (P_{ip}/4P_c) - 1/2$ **(19)**

m/m^1 = ratio of cross modulation transferred from a large signal to a smaller one
P_{ip} = intercept point power
P_c = interfering signal power

Cross modulation in dB is simply: $m/m^1\,(dB) = 20 \log (m/m^1)$ **(20)**

In **fig. 11** cross modulation is plotted against the difference between the intercept point and the cross-modulating signal in dBm. Cross modulation of 30 dB, for example, corresponds to 21 dB difference between the intercept point and the signal producing the cross modulation. For a receiver with an intercept point at +30 dBm, a modulated input signal at a level of +9 dBm (630 mV across 50 ohms) will produce 30 dB cross modulation. For a receiver with an intercept point at -9.5 dBm (the more usual case), an interfering signal level of -30.5 dBm (6.7 mV) will produce 30 dB cross modulation.

gain compression

When a receiver is tuned to a weak signal, a strong, adjacent signal may cause an apparent decrease in receiver gain. This is called compression or desensitization and occurs when the input voltage from the undesired signal is large enough to exceed the bias on an RF amplifier or mixer and drives the base (or grid) into conduction. This reduces gain, as shown by the compressed curve of fig. 8, and increases distortion. The rectified base (or grid) current can also be coupled back to the receiver's agc system which results in a further reduction in overall receiver gain.

Compression is measured by setting one signal generator to produce a CW signal and another generator, at a given frequency spacing, is adjusted to depress the desired signal a certain amount, usually 3 dB. Like cross modulation, however, a compression specification has little meaning if the frequency separation between the two signals is not specified.

Since both cross modulation and compression are caused by strong, undesired signals which are adjacent to the receiver passband, they can be controlled to a certain extent by the selectivity at the front end of the receiver. High receiver sensitivity, of course, is the antithesis of good cross-modulation and compression performance - this reinforces the argument for receiver noise figures on the order of 10 dB for the high frequency range.

dynamic range

The front end of a receiver is subjected to a multiplicity of input signals which tend to intermodulate to produce a level of distortion products which is dependent on the magnitude of the incoming signals. Therefore, the upper end of a receiver's dynamic range is defined by the input signal level which produces third-order 1M 0 products just equal to the receiver's noise level.

At the lower end dynamic range is limited ultimately by the noise figure of the receiver. Also important, however, is the way the receiver handles weak signals. Some linear RF amplifiers and mixers give good performance in the middle of their operating range but exhibit transfer curves that introduce considerable distortion at low signal levels. With proper design, however, this is not a problem, and the dynamic range of a receiver is usually defined as the spurious-free dynamic range where the maximum input signal is as defined above and the minimum input signal is at the noise floor of the receiver (**eq. 8**).

$$DR = 2/3\,(IP - N_o) \qquad \textbf{(21)}$$

where DR = spurious-free dynamic range, dB
IP = intercept point, dBm
N_o = receiver noise floor, dBm

The dynamic range of a receiver is important because it allows you to directly compare the strong-signal performance of one receiver against that of another. On today's crowded bands, and the high incidence of kilowatt transmitters and directive antennas, strong signal performance is usually much more important than sensitivity. Although dynamic range can be used as a figure of merit, it's also useful to know the maximum input signal level, $P_{i(max)}$, which will produce third-order IMD products just equal to the noise level. This can be calculated from

$$P_{i(max)} = 1/3\ (2IP + N_o) \qquad \textbf{(22)}$$

$P_{i(max)}$ = maximum input signal, dBm
IP = intercept point, dBm
N_o = receiver noise floor, dBm

For example, assuming a noise figure of 10 dB and 2.1-kHz bandwidth, the spurious-free dynamic range and maximum input signal of a receiver with an intercept point at +30 dBm are

$$DR = 2/3[30 - (-131)] = 107.3\ dB$$

$$P_{i(max)} = 1/3[\ 2 \times 30) + (-131)]$$

$$= -23.7dBm$$

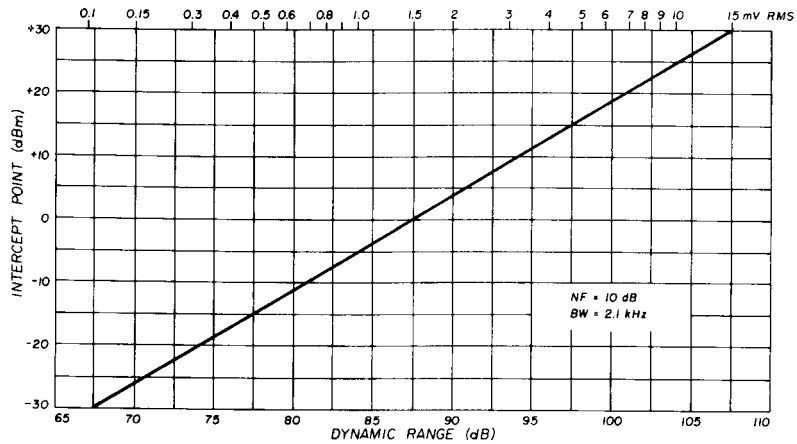

fig. 12. Spurious-free dynamic range vs intercept point (based on 2.1.kHz bandwidth, 10 dB noise figure). Maximum input signal (millivolts rms across 50 ohms) is shown at top.

Thus, the IMD products will be well below the noise level for all input signals below -23.7 dBm (14,000 µV or about S9+43 dB)! As a comparison, consider a receiver with a third-order intercept at -9.5 dBm (10 dB noise figure, 2.1-kHz bandwidth):

DR = 2/3[- 9.5 - (-131)] = 81 dB $\qquad$ $P_{i(max)} = 1/3[2(-9.5) +(-131)] = -50\ dBm$

With this receiver the distortion products are equal to the noise level with an input signal of about 710 µV or S9+17 dB. This may represent adequate strong-signal performance if you live out in the country, but it's doubtful. If you live in an urban area, you'll have a lot of trouble digging weak signals out of the morass of IMD products which effectively raise the noise floor of the receiver. A graph of intercept point vs dynamic range and maximum input signal is presented in fig. 12 for a receiver with a 10 dB noise figure and 2.1-kHz bandwidth (typical for modern amateur communications receivers).

summary

Although modern amateur receivers are no longer performance limited by noisy vacuum tubes or poor selectivity, the published performance specifications have changed little since the 1940s and are still limited essentially to data on sensitivity and selectivity. Specifications on intermodulation distortion, cross modulation, desensitization and dynamic range, if they're mentioned at all, provide insufficient information for direct buyer comparison. Purchasing a new receiver under these conditions is a bit like buying a new car without knowing gas mileage or how many passengers it will carry.

The performance specifications for the high-frequency receiver shown in table 3 leave no question as to receiver performance and are recommended as a guide for receiver manufacturers to follow in the future. Well informed amateurs should demand nothing less.

table 3. Specifications for a high-performance, high-frequency communications receiver provide a good format for amateur equipment manufacturers to follow. These specifications give complete reference and qualifying data and leave little question as to actual receiver performance.

Frequency range	500 kHz to 30 MHz
Tuning accuracy :	± 500 Hz relative to the frequency of the desired signal
Sensitivity	CW and ssb: 0.5 µV for 10 dB SIN ratio in a 2.4-kHz bandwidth (11 dB noise figure)
I-f selectivity	2.1 kHz at -6 dB, 4.2 kHz at -60 dB (2.0 shape factor)
Intermodulation products	**Out of band**: With two 20 mV signals separated and removed from the desired signal by not less than 25 kHz the third-order IMD products are not less than 90 dB below either of the interfering signals. Intercept point = + 24 dBm. **In band:** Two In-band signals of 20 mV will produce third order IMD products not greater than -50 dBm
Dynamic range	102 dB
Cross modulation	With a desired signal greater than 100 µV In a 2.4-kHz bandwidth, an un-wanted signal, 30% modulated, removed not less than 25 kHz, must be greater than 175 mV to produce an output 30 dB below the output produced by the desired signal.
Compression	With a desired signal of 500 µv, an unwanted signal more than 25 kHz removed must be greater than 300 mV to reduce the output by 3 dB
Spurious response	**External signals** 25 kHz or more removed from the desired signal must be at least 85 dB above the level of the desired signal to produce an equivalent output **Internal** spurious signals are not more than 3 dB above the noise level measured in a 2.1-kHz bandwidth
AGC range	An increase in input of 110 dB above 1 µV will produce an output change of less than 6 dB

references

1. J. J. Lamb, W1AL, "Short-Wave Receiver Selectivity to Match Present Conditions," QST, August, 1932, page 9.
2. B. Goodman, W1 OX, "What's Wrong with Our Present Receivers?" QST, January, 1957, page 11.
3. U. L. Rohde, "Eight Ways to Better Radio Receiver Design," Electronics, February 20, 1975, page 87.
4. "World Distribution and Characteristics of Atmospheric Radio Noise," CCIR Report 322, International Radio Consultive Committee (CCIR), ITU, Geneva, 1963.
5. C. R. Graf, W5LFM, and M. R. Clinch, K2BYM, "High-Frequency Atmospheric Noise," QST, October, 1971, page 42; February, 1972, page 16.
6. J. B. Johnson, "Thermal Agitation of Electricity in Conductors," Physical Review, July, 1928, page 97.
7. H. Nyquist, "Thermal Agitation of Electric Charge in Conductors," Physical Review, July, 1928, page 110.
8. S. Goldman, Frequency Analysis, Modulation and Noise, McGraw-Hili, New York, 1948, page 394.
9. R. H. Turrin, W2IMU, "Simple Super Selectivity," QST, January, 1967, page 48.
10. G. E. Tralle, "A Guide to Noise Figure," Microwaves, June, 1962, page 46.
11. H. T. Friis, "Noise Figures of Radio' Receivers," Proceedings of the IRE, July, 1944, page 419.
12. J. R. Kennedy, K6MIO, "Noise Temperature - The Real Meaning of Noise Figure," ham radio, March, 1969, page 26.
13. .R. L. Nelson, K6ZGQ, "Receiving Antennas," ham radio, May, 1970, page 56.
14. . L. N. 14Anciaux, WB6NMT, "Accurate Noise-Figure Measurements at VHF ," ham radio, June, 1972, page 36.
15. R. E. Guentzler, W8BBB, "Noise Generators," QST, March, 1972, page 44.
16. J. A. Huie, K2PEY, "A VHF Noise Generator ," QST, February, 1964, page 23.
17. R. E. Guentzler, W8BBB, "The 'Monode' Noise Generator," QST, April, 1967, page 30; "Additional Data on the Monode Noise Generator," QST, Technical Correspondence, August, 1969, page 50.
18. F. E. Terman, Electronic and Radio Engineering, McGraw-Hill New York, 1955, chapter 10.
19. "Get the Most from Mixers," Mini-Circuits Laboratory, 837-843 Utica Avenue, Brooklyn, New York 11203.