CCD-TR606E
RMT-706

SERVICE MANUAL

AEP Model
UK Model
E Model
Australian Model

Remote commander is available as a unit. But as individual parts the battery case lid of commander is only avaiable.

Video 8 Handycam

A MECHANISM

For the block diagram and interface, refer to the separate Service Manual.

For MECHANISM ADJUSTMENTS, refer to the "8 mm Video MECHANICAL ADJUSTMENT MANUAL IV" (9-973-199-11).

SPECIFICATIONS

Video Camera Recorder

System

Video recording system
Two rotary heads, Helical scanning FM system
Audio recording system
Rotary heads, FM system
Video signal PAL colour, CCIR standards
Usable cassette
8 mm video format cassette (standard 8 mm)
Tape speed SP mode: Approx. 20.051 mm (13/16 inches)/second
LP mode: Approx. 10.058 mm (13/32 inches)/second
Recording time
SP mode: 1 hour and 30 minutes (P5-90)
LP mode: 3 hours (P5-90)
Playback time SP mode: 1 hour and 30 minutes (P5-90)
LP mode: 3 hours (P5-90)
Fastforward/rewind time
Approx. 6 min. 30 sec. (P5-90)
Image device CCD (Charge Coupled Device)
Viewfinder Electronic viewfinder (monochrome)
Lens Combined 10 x power zoom lens
f= 6.1 to 61 mm (1/4 to 2 7/16 inches) (44 to 440 mm when converted to a 35 mm still camera)
F 1.6 to 2.9
Filter diameter 52 mm (2 1/8 inches)
TTL autofocus system inner focus wide macro system

Colour temperature
Auto
Minimum illumination
2 lx (F 1.6)
Illumination range
2 lx to 100,000 lx
Recommended illumination
More than 100 lx

Output connector

Video output Phono jack, 1 Vp-p, 75 Ω, unbalanced, sync negative
Audio output Phono jacks (2: stereo L and R) –7.5 dBs, (at output impedance 47 kΩ) impedance less than 2.2 kΩ
RFU DC OUT Special minijack, DC 5 V
Headphones jack
Stereo minijack
Remote jack Stereo mini-minijack (ø 2.5 mm)
MIC jack Stereo minijack, –66 dBs low impedance with 2.5 to 3 V DC, output impedance 6.8 kΩ (ø 3.5 mm)

General

Power requirements
On battery mounting surface
6.0 V (battery pack)
7.5 V (AC power adaptor)
Average power consumption
5.6 W (camera recording) including the viewfinder

— Continued on next page —

MICROFILM

8 VIDEO CAMERA RECORDER

SONY®

Installation	Vertically, Horizontally
Operating temperature	0°C to 40°C (32°F to 104°F)
Storage temperature	–20°C to +60°C (–4°F to +140°F)
Dimensions	Approx. 109 x 109 x 197 mm (w/h/d) (4 3/8 x 4 3/8 x 7 4/8 inches)
Mass	About 920 g (2 lb) excluding the battery pack, lithium battery, cassette, and shoulder strap About 1140 g (2 lb 7 oz) including the battery pack NP-55H, lithium battery CR2025, cassette P5-90, and shoulder strap
Microphone	Electret condenser microphone, stereo type

AC power adaptor

Power requirements	110-240 V AC, 50/60 Hz
Power consumption	20 W
Output voltage	DC OUT: 7.5 V, 1.6 A in operating mode Battery charge terminal: 10 V, 1.3 A in charge mode
Application	Sony battery packs NP-55H, NP-66H, NP-77H/-77HD
Operating temperature	0°C to 40°C (32°F to 104°F)
Storage temperature	–20°C to +60°C (–4°F to +140°F)
Dimensions	Approx. 170 x 41.6 x 82 mm (w/h/d) (6 3/4 x 1 11/16 x 3 1/4 inches) including projecting parts and controls
Mass	Approx. 520 g (18 oz)

Design and specifications are subject to change without notice.

Note
This appliance conforms with EEC Directive 87/308/EEC regarding interference suppression.

Supplied accessories

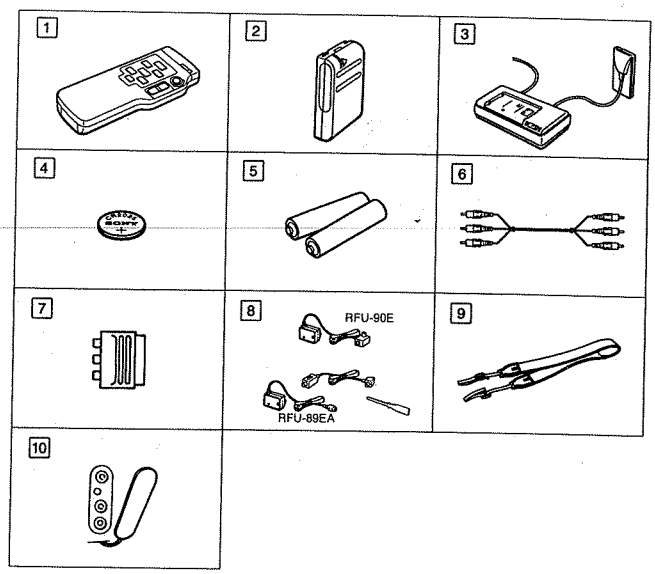

1 **Wireless Remote Commander** (1) (p. 44)
2 **NP-55H Battery pack** (1) (p. 5)
3 **AC-V35A AC power adaptor** (1) (p. 5)
4 **CR2025 Lithium Battery** (1) (p. 9)
5 **Size AA (R6) battery for Remote Commander** (2) (p. 10)
6 **A/V connecting cable** (1) (p. 20)
7 **21-pin adaptor** (1) (p. 20)
8 **RFU-90E or RFU-89EA RFU adaptor (With the RFU-89EA, an aerial selector and a screwdriver are supplied.)** (1) (p. 21)
9 **Shoulder strap** (1) (p. 45)
10 **Jack cover** (1)
(Attached to camcorder)

SAFETY CHECK-OUT

After correcting the original service problem, perform the following safety checks before releasing the set to the customer:

1. Check the area of your repair for unsoldered or poorly-soldered connections. Check the entire board surface for solder splashes and bridges.
2. Check the interboard wiring to ensure that no wires are "pinched" or contact high-wattage resistors.
3. Look for unauthorized replacement parts, particularly transistors, that were installed during a previous repair. Point them out to the customer and recommend their replacement.
4. Look for parts which, though functioning, show obvious signs of deterioration. Point them out to the customer and recommend their replacement.
5. Check the B+ voltage to see it is at the values specified.

SAFETY-RELATED COMPONENT WARNING!!

COMPONENTS IDENTIFIED BY MARK ⚠ OR DOTTED LINE WITH MARK ⚠ ON THE SCHEMATIC DIAGRAMS AND IN THE PARTS LIST ARE CRITICAL TO SAFE OPERATION. REPLACE THESE COMPONENTS WITH SONY PARTS WHOSE PART NUMBERS APPEAR AS SHOWN IN THIS MANUAL OR IN SUPPLEMENTS PUBLISHED BY SONY.

TABLE OF CONTENTS

8. MECHANICAL SECTION ADJUSTMENTS

9. VIDEO SECTION ADJUSTMENTS

SERVICE NOTE

[SEMICONDUCTOR FOR CORRECTION LIST DISPLAY]

Part code and part name of the semiconductor for correction of the print board is discribed in the space of each print figure. Use this list when ordering parts.

[PARTS LOCATION DIAGRAM RELATED TO POWER SUPPLY]

The parts location diagram for the power suppply which are often checked and replaced when repairing the fuse and IC link and so on. (See page 60, 94, 100, 121, 122, 124)
This diagram is useful for repair.

[SEMICONDUCTOR LOCATION]

In this service manual, the mounted locations of the semiconductors (IC, transistor, diodes) are indicated in red as shown below. This enables to find the location on the board easily when servicing.

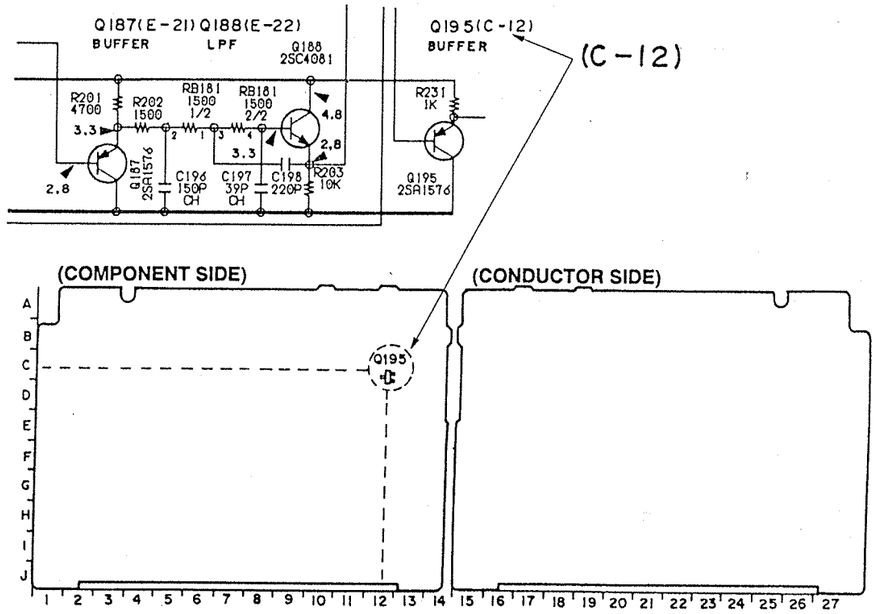

[HEAD CLEANING]

After an extended period of use the video image may become indistinct or may not appear at all during playback of a tape. The cause of this usually are dirty video heads. For remedy, cleaning of the heads is required.

Check for Head Clogs During Recording

① Use a blank tape, record a short section, then press the stop button to stop.
② Set to recording mode again.
③ If the [✕] mark is flashing in the viewfinder at this time, head clogs are occurred.

Check During Playback of a Tape

① Play back a pre-recorded tape and display the image on a TV screen.
② If there is no sound and the image is unstable, no image appears on the screen, or tape transport is unstable, head clogs are occurred.

Remedy

[Cleaning method using a cleaning tape]

- Use the Cleaning Tape. (Please follow the instructions attached to the cleaning tape.)

This section is extracted from instruction manual.

Charging and Installing the Battery Pack

Removing the Battery Pack
Slide the battery pack in the direction of the arrow (see drawing).

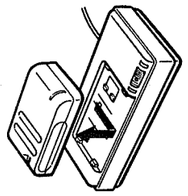

Note on charging the battery pack
The POWER lamp will remain lit for a while even if the battery pack is removed and the power cord is unplugged after charging the battery pack. This is normal.

Installing the Battery Pack

(1) Lift up the viewfinder. (2) Align the right side of the battery pack with the white line on the camcorder, and slide the battery pack to the right.

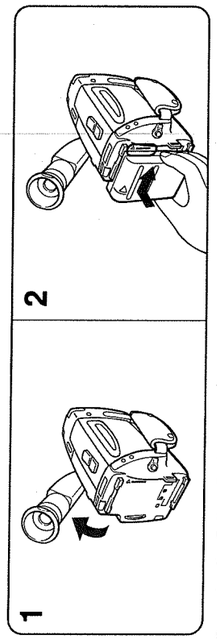

Removing the Battery Pack
(1) Lift up the viewfinder. (2) While pressing BATT, slide the battery pack to the left.

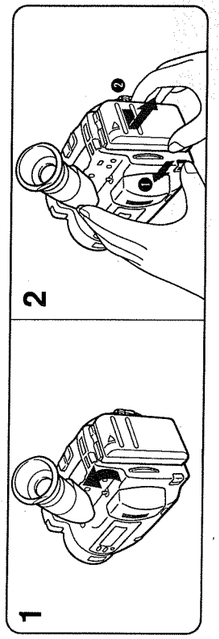

Getting Started
Charging and Installing the Battery Pack

Before using your camcorder, you first need to charge and install the battery pack. To charge the battery pack, use the supplied AC-V35A AC power adaptor.

Charging the Battery Pack

Charge the battery pack on a flat place without vibration.
(1) Connect the power cord to a wall outlet. (2) Align the right side of the battery pack with the white line on the AC power adaptor, then slide the battery pack in the direction of the arrow. (3) Set the selector to CHARGE. The CHARGE lamp (orange) lights up. Charging begins.
When charging is completed, the CHARGE lamp goes out. Set the selector to the center position and unplug the unit from the wall outlet. Then remove the battery pack and install it on the camcorder. To stop charging, set the selector to the center position.

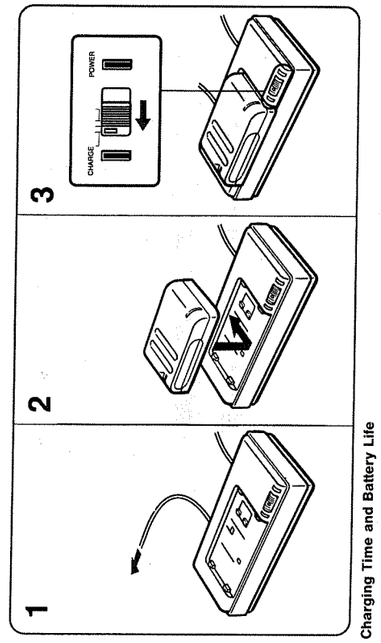

Charging Time and Battery Life

Battery pack	NP-55H (supplied)	NP-77H/ NP-77HD	NP-66H
Charging time*	70	140	100
Battery life**	65	145	105

* Approximate minutes to charge an empty battery pack using the AC-V35A (Lower temperatures require a longer charging time.)
** Approximate continuous recording time (in minutes) indoors

Important!

Use the battery completely before re-charging!

Before you recharge the battery pack, make sure the battery has been used up (discharged) completely. Repeated charging while some capacity remains causes a lowering of battery capacity. However, the original battery capacity can be recovered if you use the battery completely and charge it fully again.

To use up the battery, remove the cassette and slide the POWER switch to CAMERA with the battery pack attached, and leave the camcorder until the indicator and the red lamp flash in the viewfinder.

Tips for Using the Battery Pack

This section shows you how you can get the most out of your battery pack.

Preparing the Battery Pack

Have Sufficient Battery Pack Power to Do 2 to 3 Times as much Recording as You have Planned.

"Battery life" indicated in this manual is measured by the continuous recording time of the camcorder, placed at room temperature using a fully-charged battery pack.

Battery Life is Shorter in Cold Environment

Battery efficiency is decreased and the battery will be used up more quickly if you are recording in a cold environment.

To Save Battery Power

Turn STANDBY on the camcorder down when not recording to save battery power. (p. 8) **[a]**
A smooth transition between scenes can be made even if recording is stopped and started again. While you are positioning the subject, selecting an angle, or looking through the viewfinder lens, the lens moves automatically and the battery is used. The battery is also used when a tape is inserted or removed.

When to Replace the Battery Pack

While you are using your camcorder, the remaining battery indicators in the viewfinder **(1)** and in the display window **(2)** decrease gradually as battery power is used up.

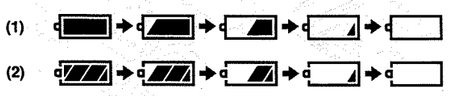

When the remaining battery indicator reaches the lowest point, the indicator appears and starts flashing in the viewfinder. (p. 8) **[b]**
When the indicator in the viewfinder changes from slow flashing to rapid flashing while you are recording, slide the POWER switch to OFF on the camcorder and replace the battery pack. Leave the tape in the camcorder to obtain a smooth transition between scenes after the battery pack is replaced.

Note on the remaining battery indicator
The remaining battery indicator of the camcorder may indicate a different remaining capacity from that of the NP-77HD battery pack (not supplied). The indicator of NP-77HD is more accurate.

Note on the Rechargeable Battery Pack

The Battery Pack Heats Up

During charging or recording, the battery pack heats up. This is caused by energy that has been generated and a chemical change that has occurred inside the battery pack. This is not cause for concern.

Battery Pack Care

- Remove the battery pack from the camcorder after using the battery pack, and keep it in a cool place. When the battery pack is attached to the camcorder, a small amount of current flows to the camcorder even if the POWER switch is set to OFF, which shortens battery life.
- The battery pack is always discharging even when it is not in use after charging. Therefore, you should charge the battery pack right before using the camcorder.

How to Use the Switch on the Battery Pack

This switch is provided so that you can mark the charged battery pack. Set the switch to the "no mark" position when charging is completed. Set the switch to the "red mark" position when the battery is used up (or in whichever direction you want to remind yourself). (p. 8) **[c]**

The Life of the Battery Pack

The battery pack can be fully charged and discharged about 500 times under normal temperatures. If the battery indicator flashes rapidly just after turning on the camcorder with a fully charged battery pack, the battery pack should be replaced with a new fully charged one.

Charging Temperature

You should charge batteries at temperatures from 10°C to 30°C (from 50°F to 86°F). Lower temperatures require a longer charging time.

Note on Charging

A Brand-new Battery Pack

A brand-new battery pack is not charged. Before using the battery pack, charge it completely.

Before Recharging a Used Battery Pack

- Make sure to use up the battery before recharging.
- If recording is completed before the indicator appears in the viewfinder, you should remove the tape, slide the POWER switch to CAMERA, turn STANDBY up, and leave the camcorder until the battery indicator flashes rapidly.
- When you use the AC-S10 power adaptor or the DC-S10 car battery charger, you can use the discharging function.
- **Charging the usable battery pack causes a lowering of battery capacity. Battery capacity can be recovered if you fully discharge and charge the battery pack again.**

After Long Storage

Recharge the battery pack after a long period of storage. If the battery pack is charged fully but not used for a long time (about 1 year), it becomes discharged. Charge it again, but in this case the battery life will be shorter than normal. After several charging and discharging cycles, the battery life will recover its original capacity.

Note on the Terminals

If the terminals (metal parts on the back) are not clean, the battery duration will be shortened.
When the terminals are not clean or when the battery pack has not been used for a long time, repeat installing and removing the battery pack. This improves the contact condition. Also, wipe the + and – terminals with a soft cloth or paper.

Be Sure to Observe the Following

- **To prevent an accident caused by a short circuit, do not allow metal objects such as a necklace to touch the battery terminals. Carry the battery pack attaching to the terminal cover. [d]**
- Keep the battery pack away from fire.
- Keep the battery pack dry.
- Do not open nor convert the battery pack.
- Do not expose the battery pack to any mechanical shock.

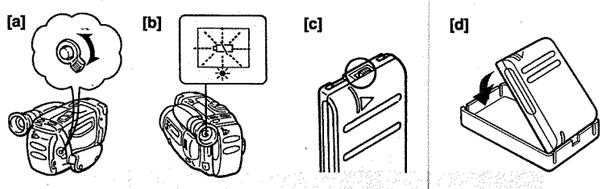

Inserting the Supplied Batteries

Your camcorder is supplied with a lithium battery and two size AA (R6) batteries. The lithium battery is for the camcorder and the size AA (R6) batteries are for the Remote Commander.

Inserting the Lithium Battery into the Camcorder

The lithium battery has a positive (+) side and a negative (–) side as illustrated below. Be sure to install the lithium battery with the positive side facing out.

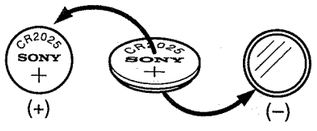

Inserting the Lithium Battery

To activate the clock, you must insert a lithium battery.
(1) Open the lid of the lithium battery compartment on the bottom of the camcorder. (2) Install the lithium battery with the positive (+) side facing out. (3) Close the lid.

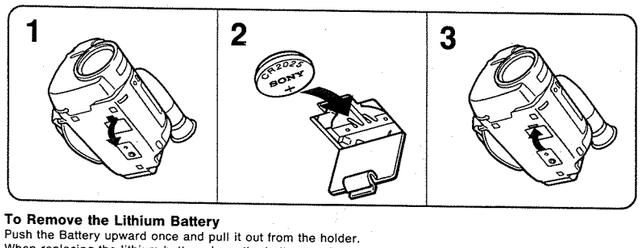

To Remove the Lithium Battery

Push the Battery upward once and pull it out from the holder.
When replacing the lithium battery, keep the battery pack or other power source attached. Otherwise, you will need to reset the date and time.

Lithium Battery Life

The lithium battery for the camcorder lasts for about 1 year under normal operation. When the battery becomes weak or dead, the date or the time indicator and the indicator flash in the viewfinder for about 5 seconds and the date or the time indicator keeps flashing in the display window when you set the POWER switch to CAMERA.

In this case, **replace the battery with a Sony CR2025 lithium battery. Use of any other battery may present a risk of fire or explosion.**

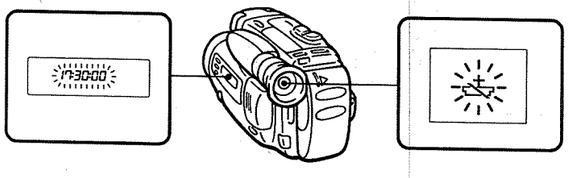

Caution

Keep the lithium battery out of the reach of children.
Should the battery be swallowed, consult a doctor immediately.

Inserting the Size AA (R6) Battery into the Remote Commander

To use the Remote Commander, you must insert two size AA (R6) batteries. Use the supplied size AA (R6) batteries.
(1) Remove the battery cover from the Remote Commander. (2) Insert both of the size AA (R6) batteries with correct polarity. (3) Put the battery cover back onto the Remote Commander.

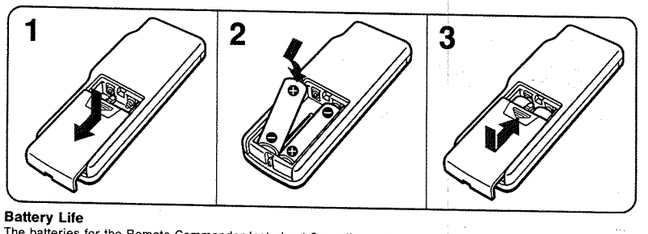

Battery Life

The batteries for the Remote Commander last about 6 months under normal operation. When the batteries become weak or dead, the Remote Commander does not work.

To avoid damage from possible battery leakage
Remove the batteries when you will not use the Remote Commander for a long time.

WARNING

The battery may explode if mistreated. Do not recharge, disassemble, or dispose of in fire.

Setting the Date and Time

You need to set the camcorder's date and time to record the correct ones onto your video. Before setting the clock, make sure a power source and lithium battery are installed.
(1) Pull out the viewfinder until it clicks. (2) While pressing the small green button on the POWER switch, slide it to CAMERA. (3) Turn STANDBY up. (4) Turn the viewfinder lens adjustment ring so that the "STBY" indicator in the viewfinder comes into sharp focus. (5) Press DATE (+) and TIME (NEXT) simultaneously for 3 seconds. (6) Adjust the digits of the year, month, day, hour and minutes by pressing DATE (+) and TIME (NEXT). To set the year to 1993, there is no need to press DATE (+) in 6-❶. Note that when you keep DATE (+) pressed, the digits advance faster.

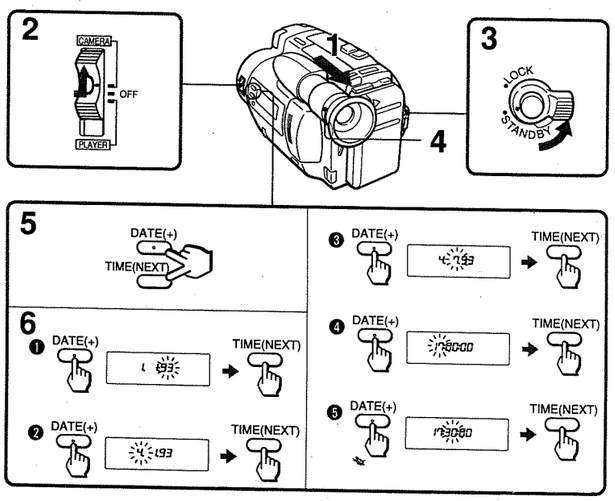

To Correct the Date and Time Settings
Press TIME (NEXT) repeatedly until the minute digits stop flashing. Then repeat steps 5 and 6.

To Check the Preset Date and Time
Press DATE (+) to display the date indicator in the viewfinder and the display window.
Press TIME (NEXT) to display the time indicator. When you press the same button again, the indicator goes off.

Note on the setting of the year
When you set the year, each time you press DATE (+) the digits change as follows.

1993 → 1994 → - - - - → 2023

Inserting a Cassette

Make sure that the power source is installed.
(1) While pressing the small blue button on the EJECT knob, slide it in the direction of the arrow. The cassette holder automatically lifts up and opens. (2) Insert a tape with the window facing out. (3) Close the cassette holder by pressing the "PUSH" mark on the cassette holder.

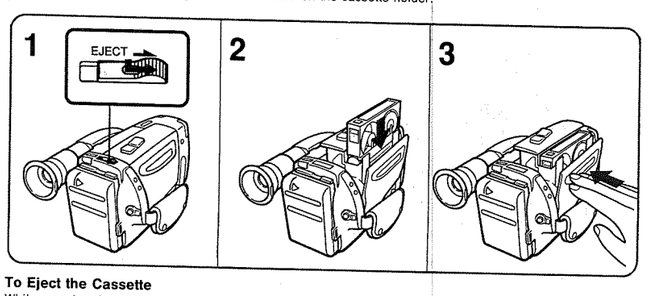

To Eject the Cassette
While pressing the small blue button on the EJECT knob, slide it in the direction of the arrow.

Adjusting the Viewfinder Lens

Before you use the camcorder for the first time or after someone else has used it, focus the viewfinder lens. Make sure that the power source is attached to the camcorder.
(1) Pull out the viewfinder until it clicks. (2) While pressing the small green button on the POWER switch, slide it to CAMERA. The lens cover opens. (3) Turn STANDBY up. (4) Turn the viewfinder lens adjustment ring so that the indicators in the viewfinder come into sharp focus.

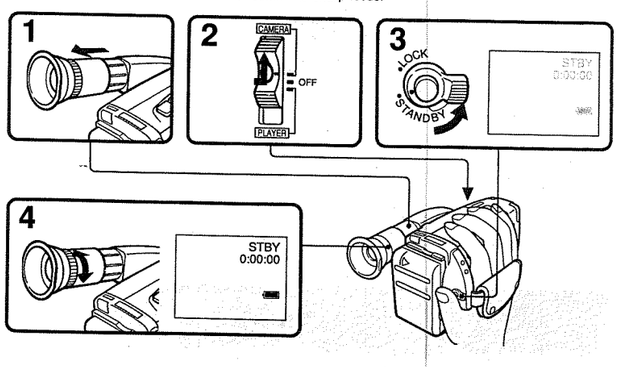

Hints for Better Shooting

For hand-held shots, you'll get better results by holding the camcorder according to the following suggestions:

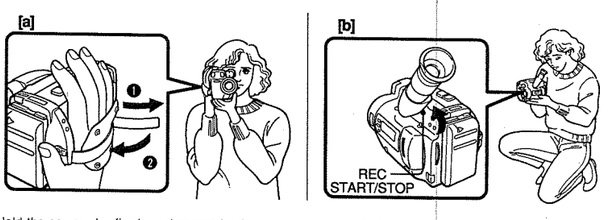

- Hold the camcorder firmly and secure it with the grip strap so that you can easily manipulate the controls with your thumb. **[a]**
- Place your right elbow against your side.
- Place your left hand under the camcorder to support it.
- Place your eye firmly against the viewfinder eyecup.
- Use the viewfinder frame as a guide to determine the horizontal plane.
- You can also record in a low position to get an interesting recording angle. Lift the viewfinder up for recording from a low position. (You can lift it up to 90 degrees.) Press REC START/STOP with your left thumb. Do not pull out the viewfinder when you record in a low position. **[b]**

Place the camcorder on a flat surface or use a tripod
Try placing the camcorder on a table top or any other flat surface of suitable height. If you have a tripod for a still camera, you can also use it with the camcorder (p. 42). When attaching a non-Sony tripod, make sure that the length of the tripod screw is less than 6.5 mm (9/32 in.) Otherwise, the screw may damage the inner parts of the camcorder.

Camera Recording

Make sure that the power source is installed and a cassette is inserted. If you set the date (p. 11), the date is automatically recorded for 10 seconds after you start recording (AUTO DATE feature). This feature works only once a day.
Before you record one-time events, you may want to make a trial recording to make sure that the camcorder is working perfectly.
(1) Pull out the viewfinder until it clicks. (2) While pressing the small green button on the POWER switch, slide it to CAMERA. The lens cover opens. (3) Close the AUTO LOCK cover. Now all the camera functions activate automatically (i.e. focus, shutter speed). (4) Turn STANDBY up. (5) Press START/STOP. The camcorder starts recording. The "REC" indicator appears and the red lamp lights up in the viewfinder.
You can also select Recording mode, SP (standard play) mode or LP (long play) mode. Set REC MODE in the menu system (p. 31) according to the length of your planned recording before you start.

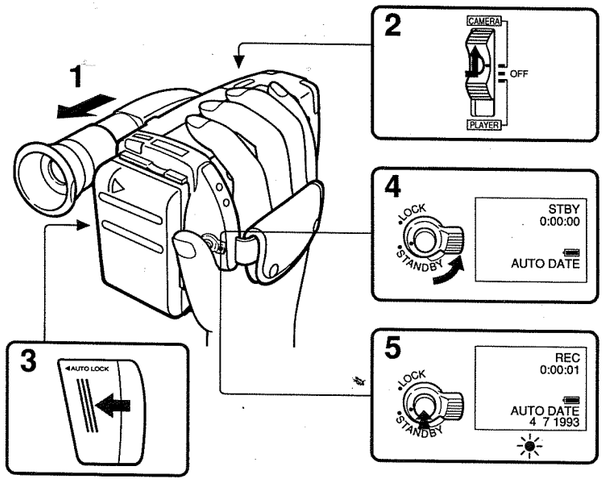

To Stop Recording Momentarily
Press START/STOP again. The "STBY" indicator appears in the viewfinder (**Standby mode**).

To Finish Recording
Turn STANDBY down and slide the POWER switch to OFF. The lens cover closes. Then, eject the tape (p. 12).

Notes on Standby mode
If you leave the camcorder in Standby mode for 5 minutes, the camcorder goes off automatically. This prevents wearing down the battery and wearing out the tape. To resume Standby mode, turn STANDBY down once and turn it up again. To start recording, press START/STOP.

Note on the tape counter
The tape counter indicates the recording or playback time. Use it as a guide. There will be a time lag of several seconds from the actual time. To set the counter to zero, press RESET.

Note on the AUTO DATE feature
You can change the AUTO DATE settings by selecting ON or OFF in the menu system.
- The AUTO DATE feature works once a day. However, the date may automatically appear more than once a day when:
  - you reset the date and time.
  - you eject and insert the tape again.
  - you stop recording within 10 seconds.
  - you set AUTO DATE to OFF once and set to ON again in the menu system.
- Once the AUTO DATE feature turns off the date display 10 seconds after the start of recording, the date and time are displayed as follows:
  - If the date display setting has been made, the date is displayed.
  - If the time display setting has been made, the time is displayed.
  - If neither display setting has been made, nothing is displayed.

Note on BEEP Feature
A beep sounds when you turn the power on or when you start recording and two beeps sound when you stop recording, confirming the operation. Several beeps also sound as a warning of any unusual condition of the camcorder. Note that the beep sound is not recorded on the tape.
If you do not want to hear the beep sound, set BEEP to OFF in the menu system (p. 32).

If you wear glasses
You can bend back the eyecup to get a better view of the viewfinder.

When moving from indoors to outdoors (or vice versa)
Turn STANDBY up and point the camcorder at a white object for about 15 seconds so that the white balance is properly adjusted.

When there is a strong wind
Set WIND to ON in the menu system (p. 32). The noise from the wind will be reduced. The indicator appears in the viewfinder.
After recording, set WIND to OFF. If you leave it ON, the sound may be recorded unnaturally.

Note on recording
When you record from the beginning of a tape, run the tape for about 15 seconds before starting the actual recording. This will ensure that you won't miss any start-up scenes when you play back the tape.

Recording mode
This camcorder records in the SP mode (approximately 20.051 mm/second) and in the LP mode (approximately 10.058 mm/second) and can play back in the SP mode and LP mode. The quality of the playback picture in the LP mode, however, will not be as good as that in the SP mode.

Preventing Accidental Erasure

To prevent accidental erasure, slide the tab on the cassette to expose the red mark. If you try to record with the red mark exposed, the and indicators flash in the viewfinder, and you cannot record.
To re-record on this tape, slide the tab back out covering the red mark.

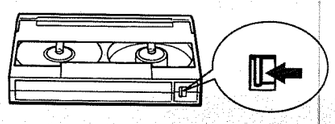

Using the Zoom Feature

Zooming is a recording technique that lets you change the size of the subject in the scene. You can also use the zoom to focus manually or to decide on a shooting angle before you start recording.
For more professional-looking recordings, use the zoom function sparingly.
"T" side: for telephoto (subject appears closer)
"W" side: for wide-angle (subject appears farther away)

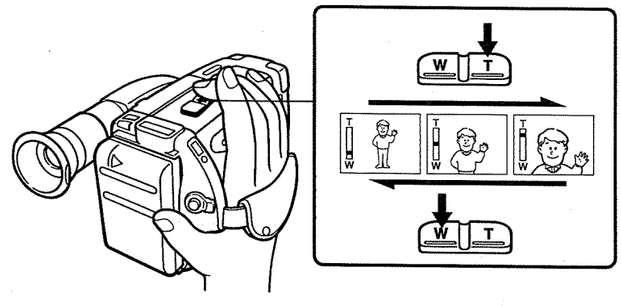

Zooming Speed (Dual speed zooming)
Press the power zoom button firmly for a high-speed zoom, press it softly for a relatively slow zoom.

When you shoot a subject using a telephoto zoom
If you cannot get a sharp focus while in extreme telephoto zoom, press the "W" side of the power zoom button until the focus is sharp. You can shoot a subject that is at least 1 m (about 39 3/8 inches) away from the lens surface in the telephoto position.

Manual focusing in macro
You can also shoot with manual focus while doing close-ups (p. 27).

Getting a Steady Picture

You can use the Steady Shot function to compensate for camera-shake. Set STEADY SHOT to ON. The indicator appears in the viewfinder and the indicator appears in the display window.
Use Steady Shot:
— When you zoom in
— When you shoot scenery from a car window
— When you shoot scenes while moving

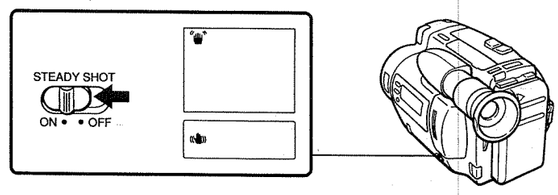

To Release Steady Shot Function
Set STEADY SHOT to OFF.

Notes on using Steady Shot
- To conserve the battery, set STEADY SHOT to OFF when you don't need it. When it is set to ON, battery power is used up more quickly.
- Steady Shot will not correct excessive camera movement.
- When you shoot stationary objects with a tripod, set STEADY SHOT to OFF.

Camera Recording

Recording the Date or Time

While you are recording, press DATE (+) or TIME (NEXT). The date or time displayed in the viewfinder is recorded with the picture. You cannot record the date and time at the same time. Except for the date or time indicator, no indicator in the viewfinder is recorded.

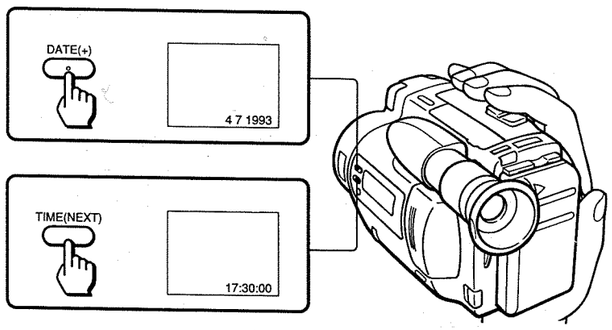

To Stop Recording with the Date and Time
Press DATE (+) or TIME (NEXT) again. The date or time indicator disappears. The recording continues.

Checking the Recorded Picture in the Viewfinder

Using EDITSEARCH, you can review the last recorded scene or check the recorded picture in the viewfinder.
(1) While pressing the small green button on the POWER switch, slide it to CAMERA. (2) Turn STANDBY up. (3) Press the – (⊖) side of EDITSEARCH momentarily; the last few seconds of the recorded portion plays back (**Rec Review**).
Keep pressing EDITSEARCH to play back the last recorded portion (**Edit Search**).
+ side: to view the forward playback picture
– side: to view the reverse playback picture

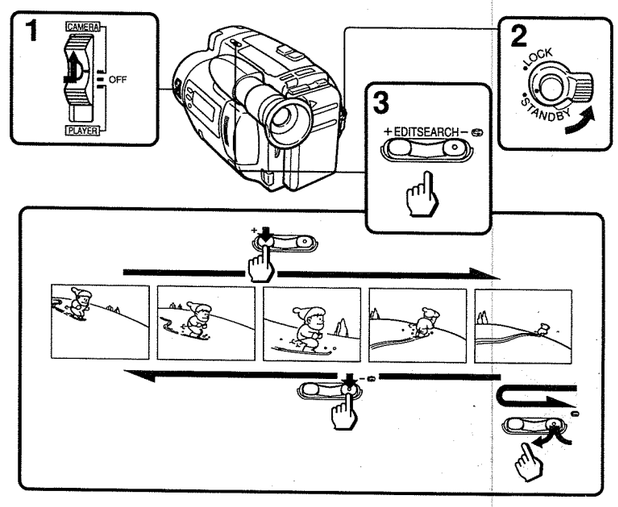

Monitoring the Sound while Viewing the Playback Picture in the Viewfinder
Connect headphones (not-supplied) to the PHONES jack. Play back the tape in PLAYER mode (p. 22).

To Stop Playback
Release EDITSEARCH.

To Begin Re-recording
Press START/STOP. Re-recording begins from the point you released EDITSEARCH. Provided you do not eject the tape, the transition between the last scene you recorded and the next scene you record will be smooth.

Note on using EDITSEARCH
You cannot hear the recorded sound during Edit Search.

Connections for Playback

You can use this camcorder as a VCR by connecting it directly to your TV for playback. There are two ways to connect the camcorder to your TV.

Connecting to a TV or a VCR with Audio/Video Input Jacks

Connect the camcorder to the TV by using the supplied connecting cable. Set the TV/VCR selector on the TV to VCR. When connecting the camcorder to VCR, set the input selector on the VCR to LINE.

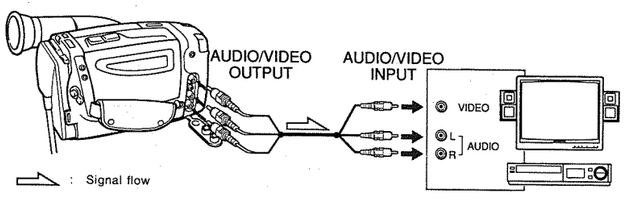

If your TV or VCR is a monaural type, connect only the white plug for audio on both the camcorder and the TV or the VCR. With this connection, the sound is in monaural.

If your TV has a 21-pin connector (EUROCONNECTOR)
Use the supplied 21-pin adaptor.

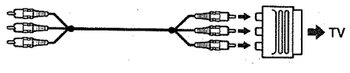

Connecting to a TV without Audio/Video Input Jacks

For Customers Supplied with the RFU-90E
Connect the camcorder to the TV by using the supplied RFU adaptor. Set the channel selector on the RFU adaptor to 3CH or 4CH whichever is not used in your area. Turn on the TV and select the 0 position. Tune the TV so that you can get picture and sound from the camcorder.

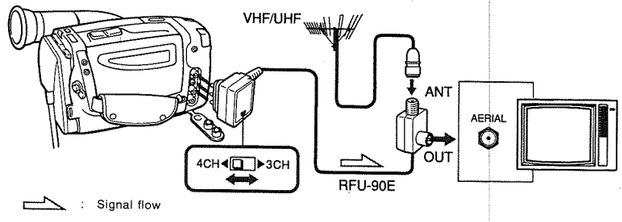

For Customers Supplied with the RFU-89EA and an Aerial Selector
Connect the camcorder to the TV by using the supplied RFU adaptor. Set the I/G selector on the RFU adaptor according to the TV system of your country. Set the ANT/VTR selector on the aerial selector to VTR. Turn on the TV and select a programme position that is not used to receive a TV station. Tune the TV so that you can get a picture and sound from the camcorder.

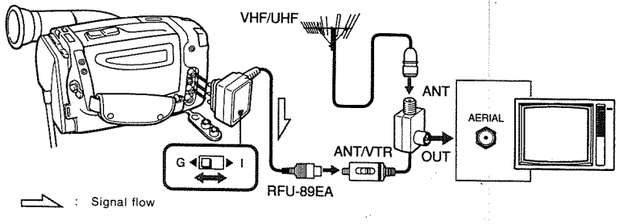

If the Playback Picture is Deteriorated
Set the ANT/VTR selector on the aerial selector to ANT. Tune the TV between UHF channels 30 and 39, so that the TV shows no picture and a steady rustling sound or no sound is heard. Set the ANT/VTR selector on the aerial selector to VTR. Turn the RF channel setting screw of the RFU adaptor slowly with a screwdriver, so that a playback picture is clearly displayed on the TV screen.

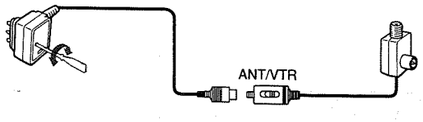

Playing Back a Tape

Playing Back a Tape

You can monitor the playback picture in the viewfinder. You can also monitor the picture on a TV screen, after connecting the camcorder to a TV or VCR (p. 20). You can use the supplied Remote Commander to control playback, if you want. Before using the Remote Commander, slide the HOLD switch in the opposite direction of the arrow.
(1) While pressing the small green button on the POWER switch, slide it to PLAYER. (2) Insert the recorded tape with the window facing out. (3) Press ▷. Playback starts.

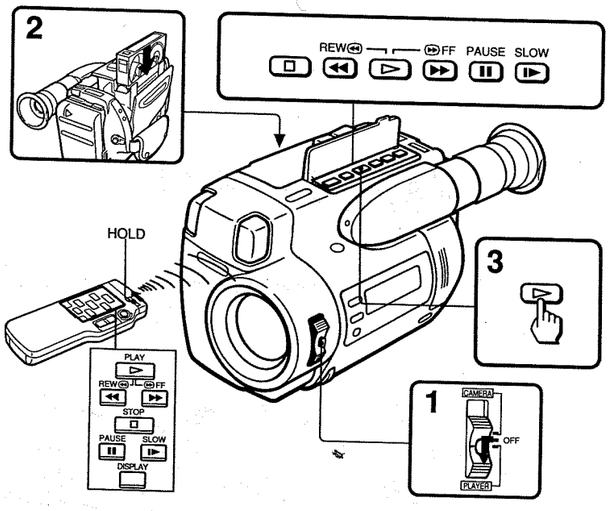

To stop playback, press □.
To rewind the tape, press ◀◀.
To advance the tape rapidly, press ▶▶.
To play back at 1/5 speed, press ▮▶.

When you use the Remote Commander
Make sure COMMANDER is set to ON in the menu system (p. 32), and the HOLD switch on the Remote Commander is not working.
When you do not use the Remote Commander, slide the HOLD switch in the direction of the arrow to prevent any misoperation.

Various Playback Modes

To view a still picture (Playback pause)
Press ❚❚ during playback. To resume playback, press ❚❚ or ▷.

To locate a scene (Picture search)
Keep pressing ◀◀ or ▶▶ during playback. To resume normal playback, release the button.

To monitor the high-speed picture during advancing the tape or rewind (Skip scan)
Keep pressing ◀◀ while rewinding or ▶▶ while advancing the tape. To resume normal playback, press ▷.

To view the picture in a sequence of stop-motion images
Press EDITSEARCH in Playback pause mode. If you keep pressing EDITSEARCH, you can view the picture plays back in the forward (+) or reverse (–) direction.

Note on playback
- Streaks appear and the sound is muted in the various playback modes.
- When Playback pause mode lasts for 5 minutes, the camcorder automatically enters stop mode.

To display the viewfinder screen indicators on the TV
Press DISPLAY on the Remote Commander. To erase the indicators, press it again.

To select the playback sound
Change the "HiFi SOUND" mode setting in the menu system (p. 32).

Advanced Operations

Using Alternative Power Sources

You can choose any of the following power sources for your camcorder: battery pack (p. 6), house current, and a 12/24 V car battery. Choose the appropriate power source depending on where you want to use your camcorder.

Place	Power source	Accessory to be used
Indoors	House current	AC-V35A AC power adaptor (supplied), AC-S10
Outdoors	Battery pack	NP-55H Battery pack (supplied), NP-77HD, NP-77H, NP-66H
In the car	12 V or 24 V car battery	DCP-77 DC pack

Using House Current

To use the supplied AC-V35A AC power adaptor:
(1) Lift up the viewfinder. (2) Connect the AC power cord to a wall outlet. Connect the connecting plate to the battery mounting surface of the camcorder. (3) Set the selector to VTR (DC OUT).

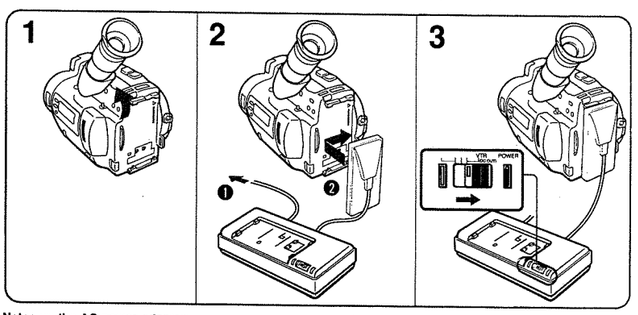

Notes on the AC power adaptor
- The camcorder cannot be operated while charging the battery pack.
- The camcorder cannot be operated unless the selector is changed to VTR (DC OUT) position.
- Keep the adaptor away from the video equipment if video operation is disturbed.
- The POWER lamp will remain lit for a while even if the unit is unplugged after use. This is normal.

To remove the connecting plate
The connecting plate is removed in the same way as the battery pack. (p. 6)

Using a Car Battery

Use the DCP-77 DC pack (not supplied). Connect the cord of the DC pack to the cigarette lighter socket of the car (12 V or 24 V). Connect the DC pack to the battery mounting surface of the camcorder.

To remove the DC pack
The DC pack is removed in the same way as the battery pack. (p. 6)

Options for Charging the Battery Pack

AC-S10 AC power adaptor:
You can charge a battery pack whether it is used up or not with this adaptor because it has a discharging function.

Selecting Automatic or Manual Adjustment Mode

The camcorder's automatic functions offer you worry-free operation under most shooting conditions. But in some circumstances, manual adjustment is better for creative recording.

Automatic Adjustment Mode

Close the AUTO LOCK cover. In automatic mode, the camcorder adjusts the focus automatically. It also sets the shutter speed to 1/50.

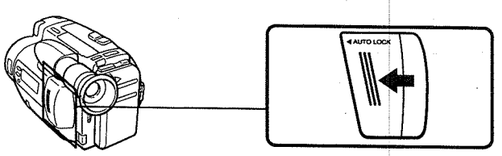

Manual Adjustment Mode

Open the AUTO LOCK cover. In manual mode, you can adjust the focus manually, and select from four PROGRAM AE modes to fit the shooting situation.
Even if in manual mode, the settings you didn't adjust manually remain the same as when in automatic adjustment mode.

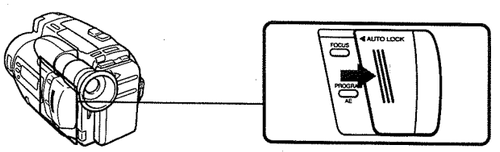

About the previous settings
Manual settings are saved in the following case:
- When you resume automatic mode after you make manual adjustments and then select manual mode again.
- When you set the POWER switch to OFF.

However, manual settings are cancelled once 5 minutes pass if you have removed the battery.

Focusing Manually

When to Use Manual Focus

In the following cases you should obtain better results by adjusting the focus manually.

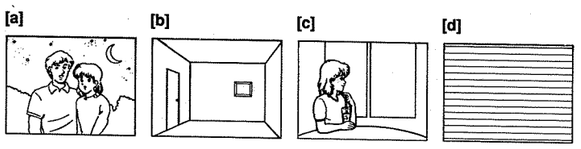

- Insufficient light **[a]**
- Subjects with little contrast — walls, sky, etc. **[b]**
- Too much brightness behind the subject **[c]**
- Horizontal stripes **[d]**
- Subject through frosted glass
- Subjects beyond nets, etc.
- Bright subject or subject reflecting light
- Shooting a stationary subject when using a tripod

Focusing Manually

When focusing manually, first focus in telephoto before recording, and then reset the shot length. (1) Open the AUTO LOCK cover. (2) Press FOCUS. The indicator appears in the viewfinder and FOCUS MANUAL indicator appears in the display window. (3) Keep pressing the "T" (telephoto) side of the power zoom button until the zooming stops. (4) Turn the focus dial to achieve a sharp focus. (5) Set the desired shot length.

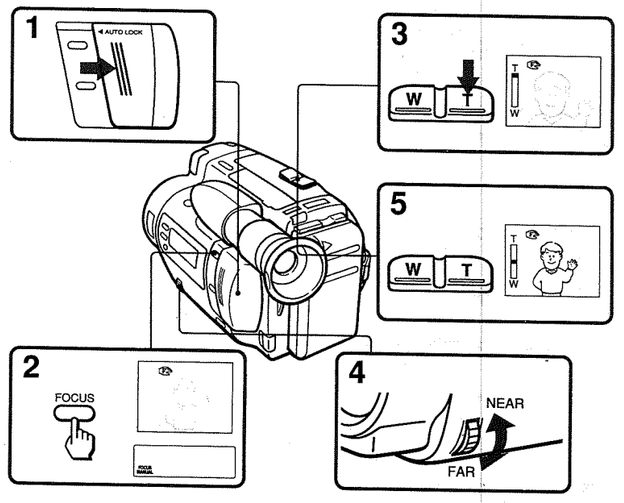

To Reactivate Autofocusing

Press FOCUS again, or close the AUTO LOCK cover. The indicator in the viewfinder and FOCUS MANUAL indicator in the display window disappear.

Shooting in relatively dark places
Shoot at wide-angle after focusing in the telephoto position.

Note on the focus dial
The focus dial does not have a stop position.

Using the PROGRAM AE Function

You can select from four PROGRAM AE (Auto Exposure) modes to suit your shooting situation. When you use PROGRAM AE, you can get a Portrait effect (the subject is in focus and the background is out of focus), capture high-speed action, or record night views.

Selecting the Best Mode

Select one of four modes, referring to the following.

Portrait mode
- A still subject such as a person or a flower
- Zooming in on a subject in the telephoto mode
- A subject behind an obstacle such as a net

Sports mode
- Outdoor sports scene such as football, tennis, golf or skiing
- A landscape in a moving car

High-speed shutter mode
- A golf swing or a tennis match in fine weather with the ball captured clearly
- Playing back certain scenes with high-speed movements in a clear, sharp picture

Twilight mode
Recording night views, neon signs or fireworks

Using the PROGRAM AE Function

(1) Open the AUTO LOCK cover. (2) Press PROGRAM AE. The indicator of the selected PROGRAM AE mode appears in the viewfinder and the display window.

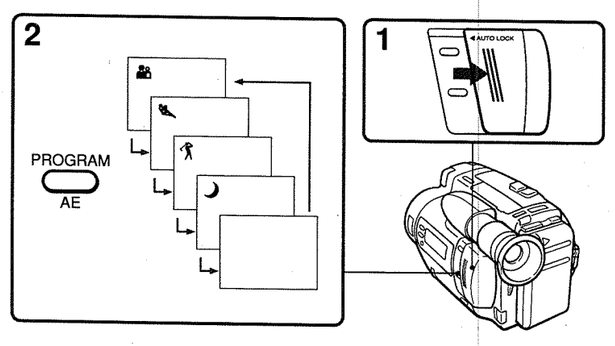

Note on shutter speed
The shutter speed in each PROGRAM AE mode is as follows:
Portrait mode — between 1/50 to 1/2000
Sports mode — between 1/50 to 1/500
High-speed shutter mode — 1/4000
Twilight mode — 1/50

Fade-in and Fade-out

You can fade a picture in or out with sound to give your recording a professional appearance.
When fading in, you can make the picture gradually appear from black or mosaic while increasing the sound. When fading out, you can make the picture gradually fade to black or mosaic while decreasing the sound.

When Fading in [a]

(1) While the camcorder is in Standby mode, press FADER. (2) Press START/STOP. The fade indicator stops flashing and the recording starts fading in.

When Fading out [b]

(1) During recording, press FADER. (2) Press START/STOP. The fade indicator stops flashing and the picture fades out. Then, recording stops.

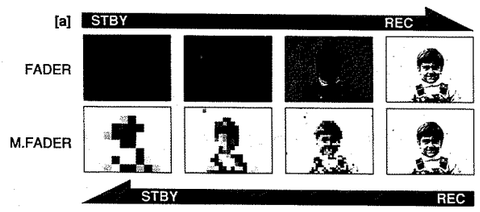

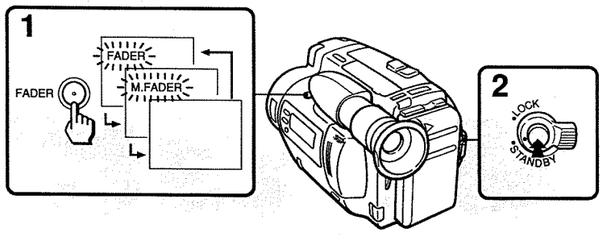

To Cancel the Fade-in/Fade-out Function

Before pressing START/STOP, press FADER until the fade indicator disappears.

Changing the Mode Settings

You can change the mode settings in the menu system to further enjoy the features and functions.
(1) Lift up the viewfinder. (2) Press MENU to display the menu in the viewfinder. ([a] Menu for CAMERA mode, [b] Menu for PLAYER mode) (3) Press ITEM to move the cursor ▶ and select the desired item. (4) Press SET to move the cursor ● or ○ and set the desired mode. If you want to change the other modes, repeat steps 3 and 4. (5) Press MENU to erase the menu display.

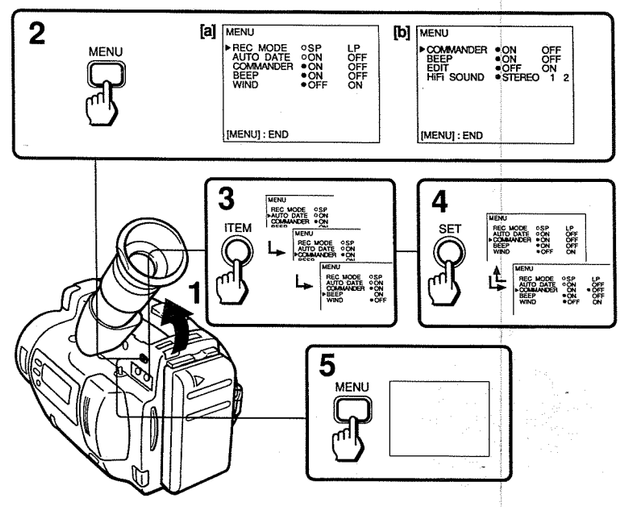

Note on the cursor ○
The settings of items marked with the cursor ○ are retained even when the battery is removed, as long as the lithium battery is in place.

Changing the Mode Settings

Selecting the Mode Setting of Each Item

REC MODE <SP/LP>
In PLAYER mode, this option is not displayed.
- Select SP to record a tape in the SP (standard play) mode.
- Select LP to record in the LP (long play) mode.

AUTO DATE <ON/OFF>
In PLAYER mode, this option is not displayed.
- Select ON to record the date for 10 seconds after recording has started.
- Select OFF for not recording the date.

COMMANDER <ON/OFF>
- Select ON when using the supplied Remote Commander for the camcorder.
- Select OFF when not using the Remote Commander.

BEEP <ON/OFF>
- Select ON to hear the beep sound.
- Select OFF otherwise.

WIND <ON/OFF>
In PLAYER mode, this option is not displayed.
- Select ON when recording in a strong wind.
- Normally select OFF.

EDIT <ON/OFF>
In CAMERA mode, this option is not displayed.
- Select ON to minimize picture deterioration when editing.
- Select OFF otherwise.

HiFi SOUND <STEREO/1/2>
In CAMERA mode, this option is not displayed.
- Normally select STEREO.
- Select 1 or 2 to play back a dual sound track tape.

Editing onto Another Tape

You can create your own video programme by editing with any other 8 mm, Hi8, VHS, S-VHS, VHSC, S-VHSC, Betamax or ED Betamax VCR that has audio/video inputs.

Before Editing

Connect the camcorder to the VCR using the A/V connecting cable (supplied). (p. 20)
Set the input selector on the VCR to LINE, if available.
(1) Set the POWER switch to PLAYER. (2) Set EDIT to ON in the menu system (p. 32).

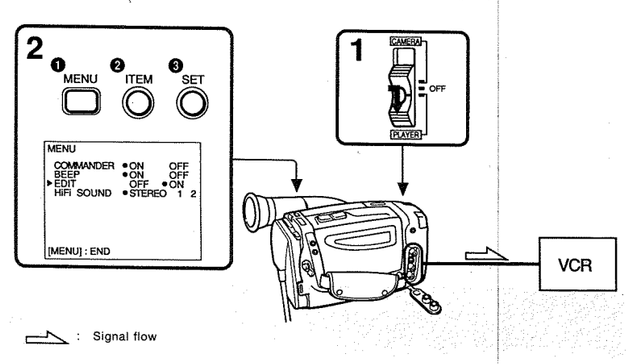

: Signal flow

If your VCR is a monaural type, connect only the white plug for audio on both the camcorder and VCR.

Editing onto Another Tape

Starting Editing

(1) Insert a blank tape (or a tape you want to record over) into the VCR. And insert your recorded tape into the camcorder. (2) Play back the recorded tape on the camcorder until you locate the point where you want to start editing, then set the camcorder in the Playback pause mode. (3) On the VCR, locate the recording start point and set the VCR in the recording pause mode. (4) Press ❚❚ on the camcorder and VCR simultaneously to start editing.

To Edit More Scenes
Repeat steps 2 to 4.

To Stop Editing Momentarily
Press ❚❚ on the VCR.

To Stop Editing
Press □ on both the camcorder and the VCR.

Use of the EDITSEARCH button
You can play back the tape in normal/reverse direction by keep pressing EDITSEARCH during Playback pause mode. You can also play back still pictures successively at specific intervals by pressing EDITSEARCH intermittently.

Note on the EDIT mode
When you set EDIT to ON in the menu system, you can keep picture deterioration resulting from editing to a minimum. However, when you edit or copy to another VCR, avoid using the edited tape for multiple generations of editing. After editing, be sure to set EDIT to OFF.

Note on the DISPLAY function
If you have displayed the viewfinder screen indicators on the TV, erase the indicators by pressing DISPLAY on the Remote Commander so that they will not be superimposed on the edited tape.

Additional Information

Playback Modes

The playback mode (SP or LP) is selected automatically according to the format in which the tape has been recorded. The quality of the recorded picture in LP mode, however, will not be as good as that in SP mode.

Note on AFM Hi-Fi stereo
When you play back a tape, the sound is in monaural if:
- You record the tape using this camcorder, then play it back on an AFM Hi-Fi monaural video recorder/player.
- You record the tape on an AFM Hi-Fi monaural video recorder, then play it back on this camcorder.

Dual sound
You can play back a dual sound track tape. Set HiFi SOUND to "1" or "2" in the menu system. (p. 32)

Recording mode
When you play back a tape, the SP/LP indicator in the viewfinder shows the recording mode SP/LP.

Foreign 8 mm video
You cannot play back software recorded on a different TV colour system. Because the TV colour systems differ from country to country, you may not be able to play back foreign pre-recorded software. Refer to page 39 to check the TV colour system of foreign countries.

Maintenance Information and Precautions

Moisture Condensation

If the camcorder is brought directly from a cold place to a warm place, moisture may condense inside the camcorder, on the surface of the tape, or on the lens. In this condition, the tape may stick to the head drum and be damaged or the unit may not operate correctly. To prevent possible damage under these circumstances, the camcorder is furnished with moisture sensors. However, take the following precautions.

Inside the Camcorder
When the [💧] and ⏏ indicators flash in the viewfinder, moisture has condensed inside the camcorder. If this happens, no other functions except for tape ejection will work.
Eject the tape, turn off the camcorder and leave it with the cassette holder open for at least one hour in a dry place.
The camcorder can be used again if the [💧] indicator does not appear when the power is turned on again.

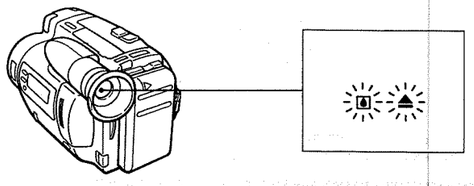

Maintenance Information and Precautions

On the Surface of the Tape
If there is moisture on the surface of the tape, when the cassette is inserted and a tape transport button is pressed, the ⏏ indicator in the viewfinder flashes.
In this case, no other functions except for tape ejection will work. **Eject the tape, turn off the camcorder and leave it with the cassette holder open for at least one hour in a dry place.** The camcorder can be used again if the ⏏ indicator does not appear when you insert the cassette and press one of the tape transport buttons.

On the Lens
If moisture condenses on the lens, no indicator appears, but the picture becomes dim. Turn off the power and do not use the camcorder for about one hour.

How to Prevent Moisture Condensation
When bringing the camcorder from a cold place to a warm place, put the camcorder in a plastic bag and allow it to adapt to room conditions over a period of time.
(1) Be sure to tightly seal the plastic bag containing the camcorder.
(2) Remove the bag when the air temperature inside it has reached the temperature surrounding it (after about 1 hour).

Video Head Cleaning

To ensure clear pictures, clean the video heads periodically. When playback pictures are "noisy" or hardly visible, the video heads may be contaminated.

[a] Slight contamination
[b] Critical contamination

If this happens, clean the video heads with the Sony V8-25CLH cleaning cassette (not supplied). After checking the picture, if it is still "noisy", repeat the cleaning. (Do not repeat cleaning more than 5 times.)

Caution
Do not use a commercially available wet-type cleaning cassette. It may damage the video heads.

Note
If the V8-25CLH cleaning cassette is not available in your area, consult your Sony service facility.

Removing Dust from inside the Viewfinder

(1) Pull out the viewfinder barrel until the illustrated mark appears. (2) Turn the viewfinder counterclockwise until it stops, and pull it out. (3) Clean the surface with a commercially available blower.

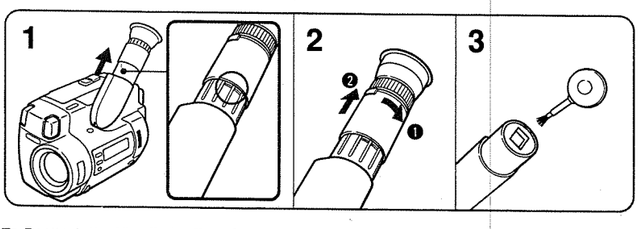

To Reattach the Viewfinder Barrel
(1) Align the mark on the viewfinder barrel with the mark on the viewfinder and push in the viewfinder barrel until it clicks. (2) Turn it clockwise until it stops and push it in.

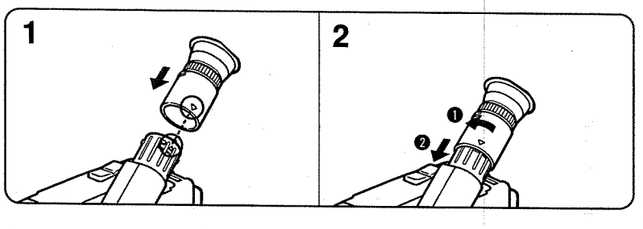

Identifying the Parts

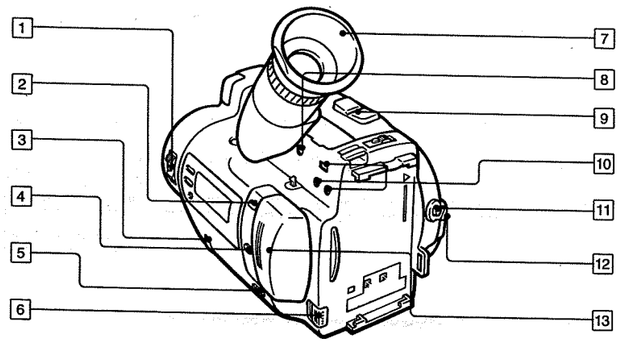

1 **POWER switch** (p. 14, 22)
2 **FOCUS button** (p. 27)
3 **Focus dial** (p. 27)
4 **PROGRAM AE button** (p. 29)
5 **STEADY SHOT switch** (p. 17)
6 **BATT (battery eject) knob** (p. 6)
7 **Eyecup** (p. 15)
8 **REC START/STOP button** (p. 13)
9 **Power zoom button** (p. 16)
10 **Menu operation buttons** (p. 31)
11 **START/STOP button** (p. 14)
12 **STANDBY switch** (p. 14)
13 **AUTO LOCK cover** (p. 14, 25)

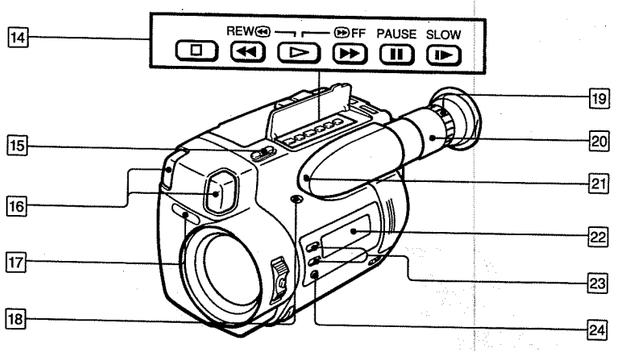

14 **Tape transport buttons** (p. 22)
□ (stop)
◀◀ REW (rewind)
▷ (playback)
▶▶ FF (fastforward)
II PAUSE
I▶ SLOW (slow playback)
15 **EDITSEARCH button** (p. 19)
16 **Built-in microphone (stereo)**
17 **Remote sensor** (p. 45)
Aim the Remote Commander here for remote control.
18 **FADER button**
19 **Viewfinder lens adjustment ring** (p. 12)
20 **Viewfinder** (p. 12, 14)
21 **Camera recording/battery lamp**
22 **Display window** (p. 43, 50)
23 **DATE (+) and TIME (NEXT) buttons** (p. 11)
24 **RESET button** (p. 15)

Identifying the Parts

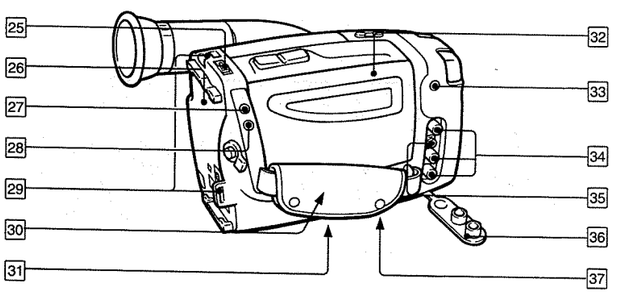

25 **EJECT switch** (p. 12)
26 **Battery mounting surface** (p. 6)
27 **REMOTE (LANC) control jack**
stands for Local Application Control Bus System. The control jack is used for controlling the tape transport of video equipment and peripherals connected to it. This jack has the same function as the jack indicated as CONTROL L or REMOTE.
28 **PHONES (headphones) jack (stereo mini jack)**
29 **Hooks for shoulder strap** (p. 45)
30 **Grip strap** (p. 13)
31 **Lithium battery compartment** (p. 9)
32 **Cassette holder** (p. 12)
33 **MIC jack (PLUG IN POWER)**
Connect an optional external microphone (stereo or monaural). This jack also accepts a "plug-in-power" microphone.
34 **Audio/Video output jacks** (p. 20)
35 **RFU DC OUT (RFU adaptor DC output) jack** (p. 21)
36 **Jack cover**
37 **Tripod receptacle** (p. 13)

Operation Indicators

For details on each indicator, refer to the pages indicated in the parenthesis.

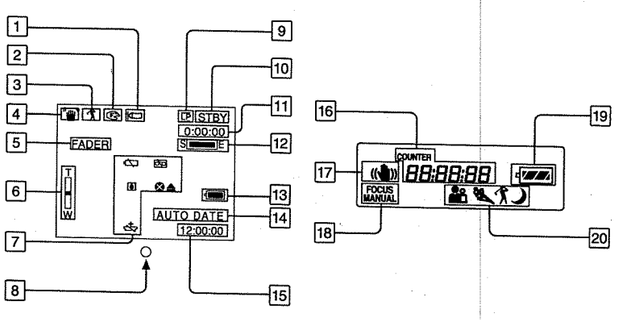

1 WIND indicator (p. 15)
2 Manual focusing (p. 27)
3 PROGRAM AE indicator (p. 28, 29)
4 STEADY SHOT indicator (p. 17)
5 FADER indicator (p. 30)
6 Power zoom indicator (p. 16)
7 Warning indicators (p. 50)
8 Recording lamp/Battery lamp
9 Indicates the recording mode when recording/playing back a tape
10 Tape transport mode (p. 22)
11 Tape counter (p. 15)
12 Remaining tape indicator
S E → S E → S E → 5min → 0min
13 Remaining battery indicator (p. 7, 50)
14 AUTO DATE indicator (p. 14, 15)
15 Date or Time (p. 11)
16 Tape counter, time or date indicator (p. 11, 15)
17 STEADY SHOT indicator (p. 17)
18 FOCUS MANUAL indicator (p. 27)
19 Remaining battery indicator (p. 7, 50)
20 PROGRAM AE indicator (p. 28, 29)

Remote Commander

The buttons that have the same name on the Remote Commander and on the camcorder function identically.

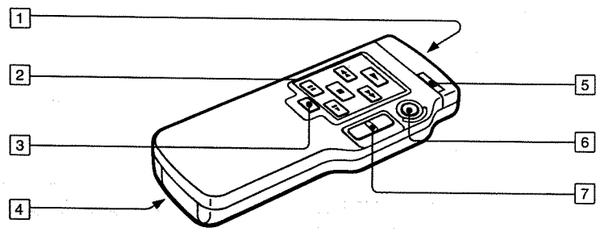

1 **Transmitter**
Point toward the remote sensor to control the camcorder after turning on the POWER switch on the camcorder.

2 **Tape transport buttons**

3 **DISPLAY button**

4 **Size AA (R6) battery holder** (p. 10)

5 **HOLD Switch**

6 **START/STOP button**

7 **Power zoom button**
The zooming speed is unchangeable in the Remote Commander.

Using the Remote Commander

Make sure that the COMMANDER mode is set to ON in the menu system on the camcorder, and that the HOLD switch on the Remote Commander is not working.

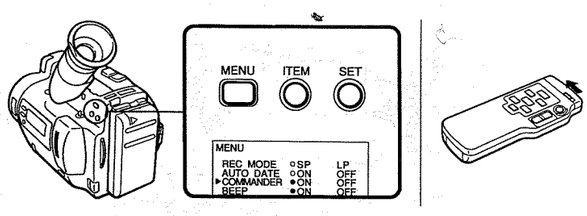

Remote Control Direction

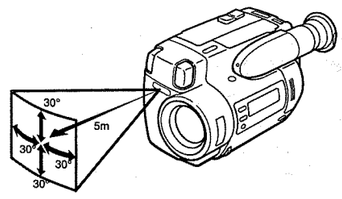

Notes on the Remote Commander

- Keep the remote sensor away from strong light sources such as direct sunlight or illumination. Otherwise, the remote control may not be effective.
- Be sure that there is no obstacle between the remote sensor and the Remote Commander.
- This camcorder works at commander mode VTR 2. The commander modes (1, 2 and 3) are used to distinguish this camcorder from other Sony VCRs to avoid remote control misoperation. If you use another Sony VCR at commander mode VTR 2, we recommend you change the commander mode or cover the remote sensor of the VCR with black paper.

Attaching the Shoulder Strap

Attach the supplied shoulder strap to the hooks for the shoulder strap (p. 42).

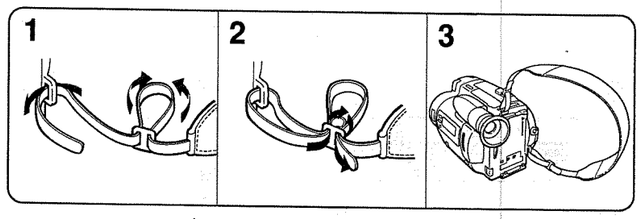

Indicators in the Viewfinder and the Display Window

Warning Indicators

If indicators flash in the viewfinder and in the display window or a caution lamp on the camcorder flashes, check the following:

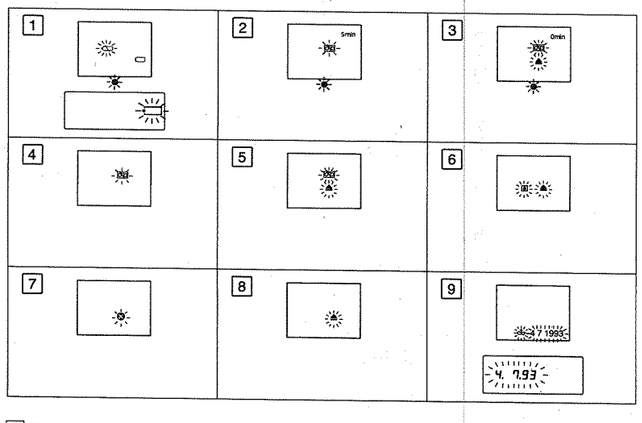

1 The battery is weak or dead.
Slow flashing: The battery is weak.
Fast flashing: The battery is dead.

2 The tape is near the end.
The flashing is slow.

3 The tape has run out.
The flashing becomes rapid.

4 No tape has been inserted.

5 The tab on the tape is out (red).

6 Moisture condensation has occurred. (p. 35)

7 The video heads may be contaminated. (p. 36)

8 Some other trouble has occurred.
Disconnect the power source and contact your Sony dealer or local authorized facility.

9 The lithium battery is weak or is not installed. (p. 10)

SECTION 2
DISASSEMBLY

NOTE: Follow the disassembly procedure in the numerical order given.

2-1. REMOVAL OF FRONT PANEL ASSEMBLY

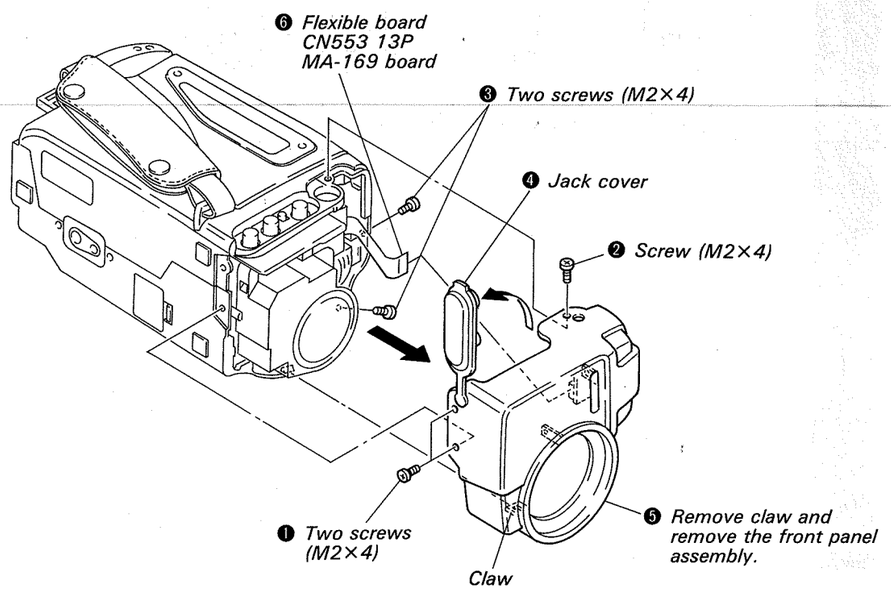

2-2. REMOVAL OF CASSETTE LID ASSEMBLY

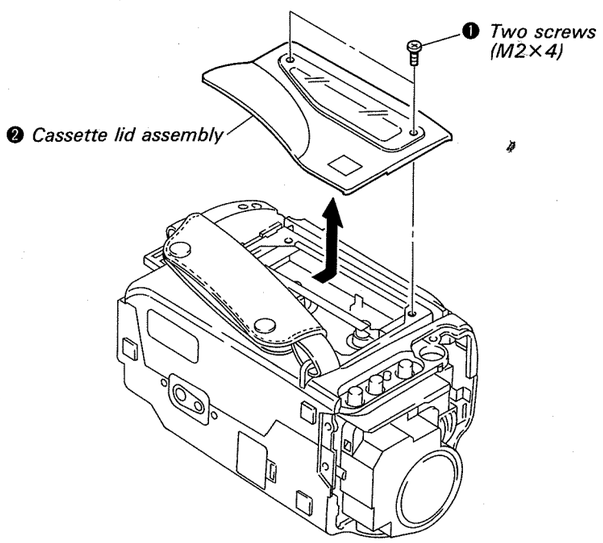

2-3. REMOVAL OF CABINET (L) ASSEMBLY

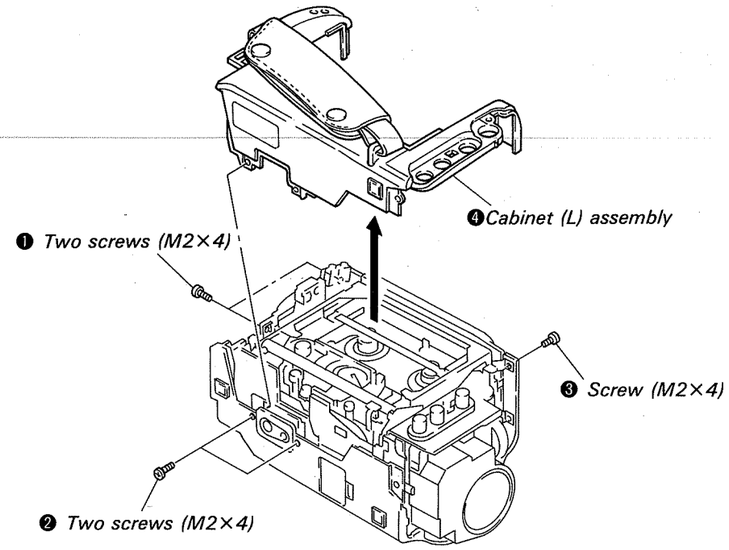

2-4. REMOVAL OF CABINET (R) ASSEMBLY

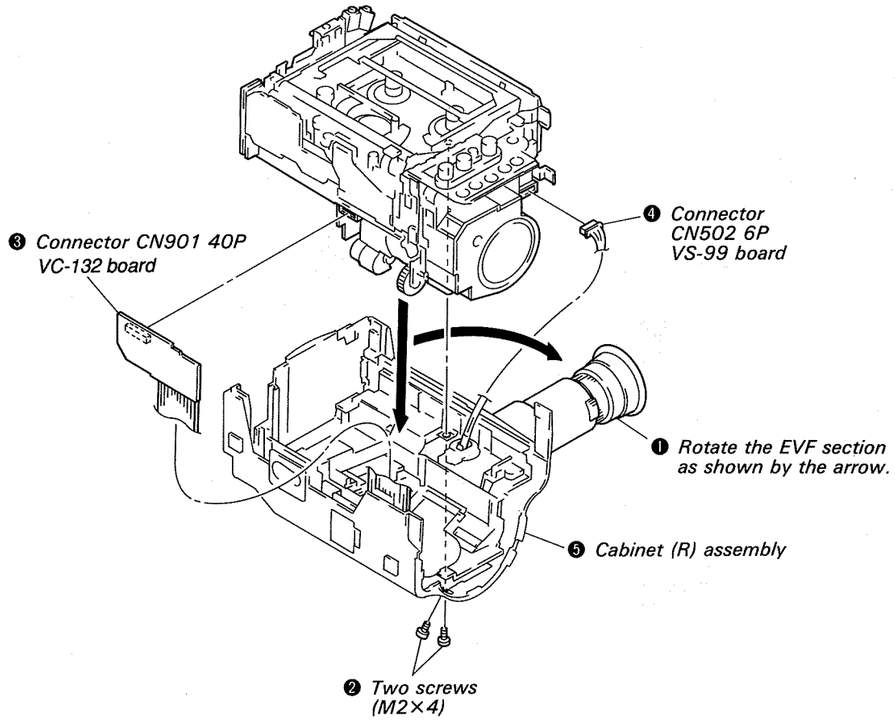

2-5. REMOVAL OF CONTROL SWITCH BLOCK

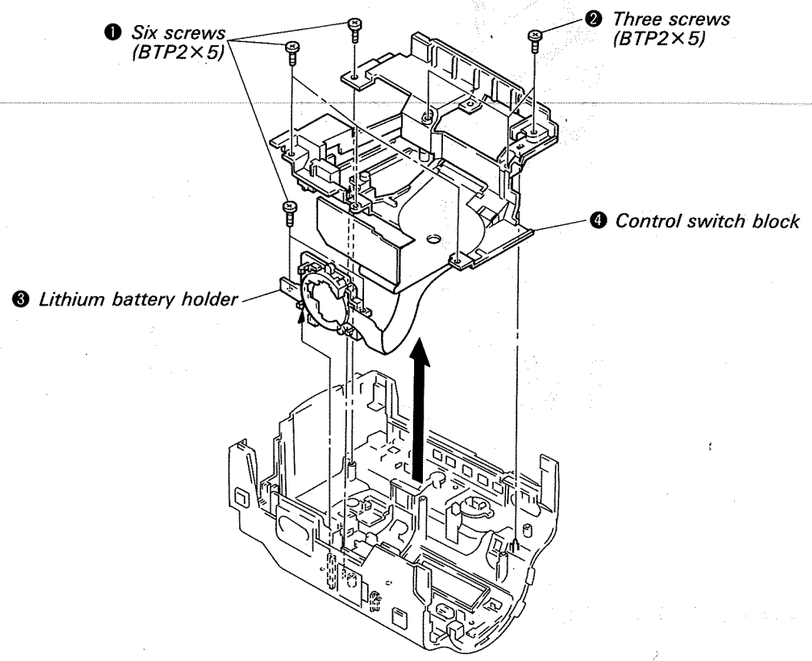

2-6. REMOVAL OF DD-55 AND SW-222 BOARDS

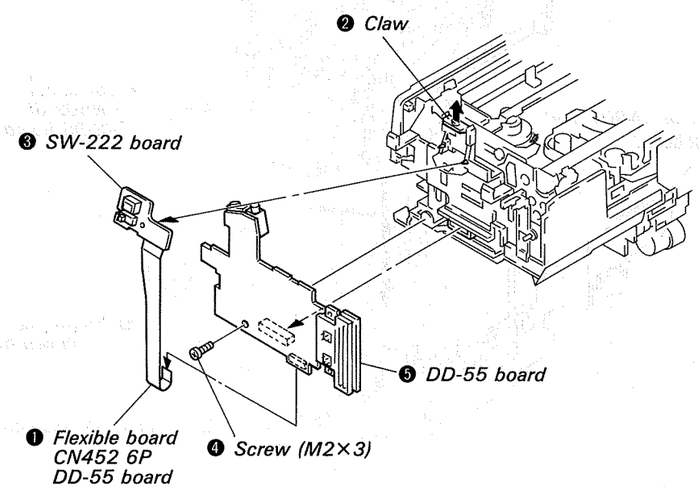

2-7. REMOVAL OF LS LID ASSEMBLY

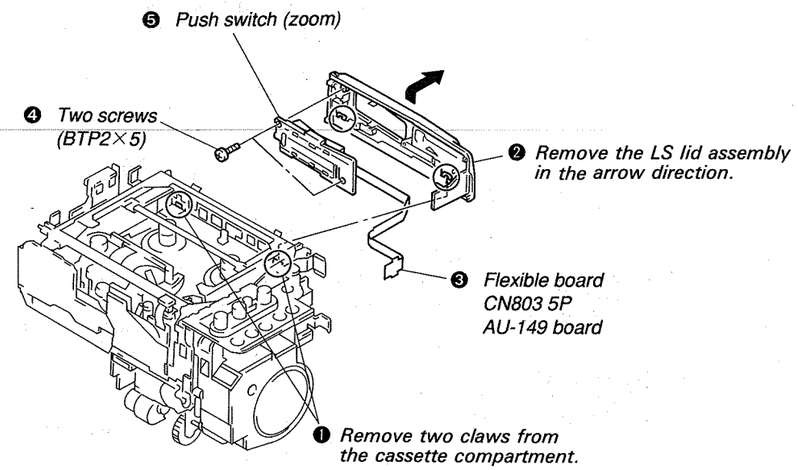

2-8. OPENING OF VC-132 BOARD

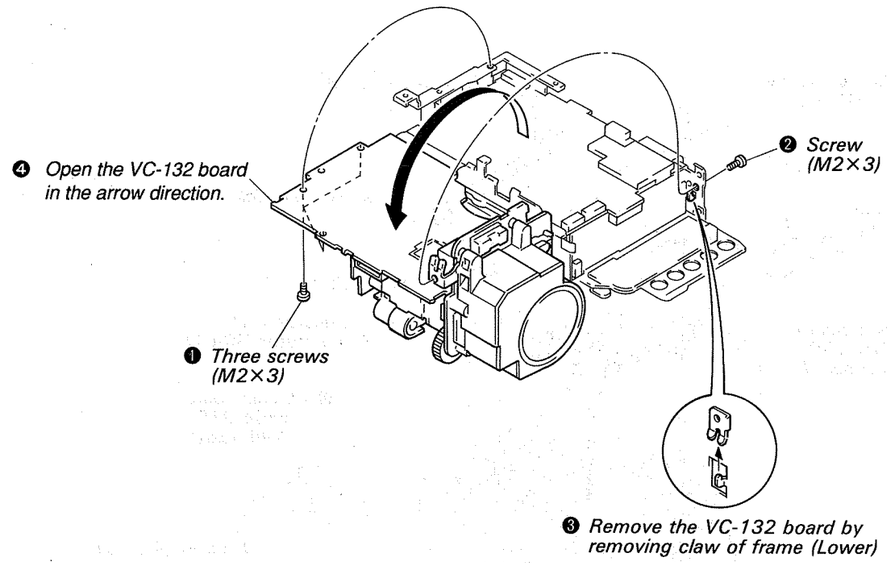

2-9. REMOVAL OF LENS ASSEMBLY (CD-105 BOARD)

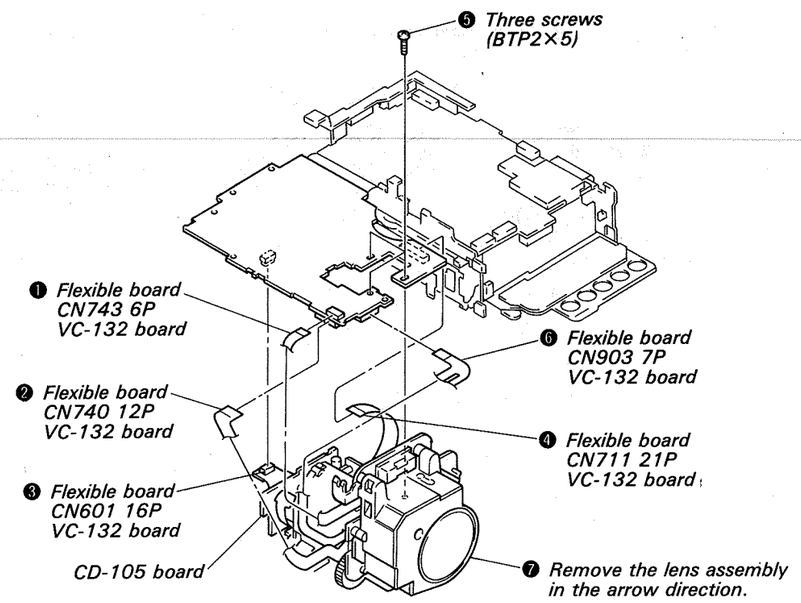

2-10. REMOVAL OF VS-99 BOARD

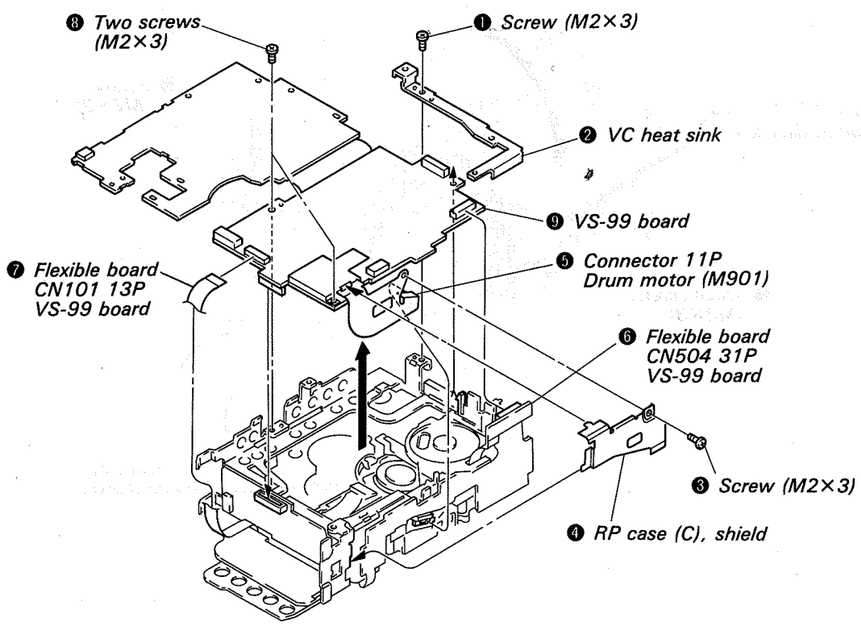

2-11. REMOVAL OF JK-98 AND AU-149 BOARDS

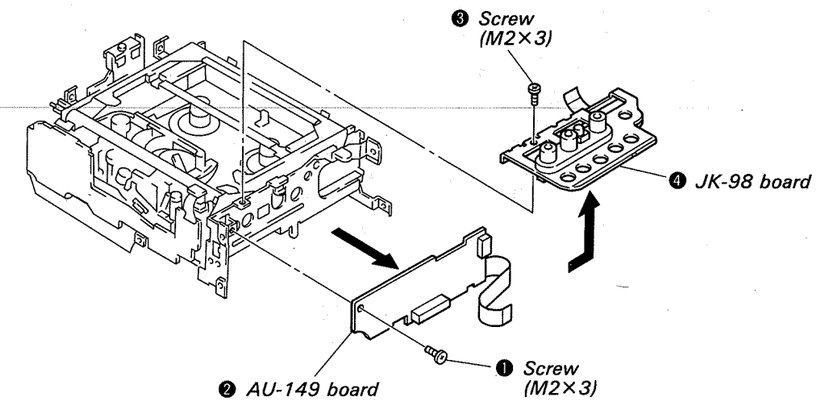

2-12. REMOVAL OF SL-32 BOARD

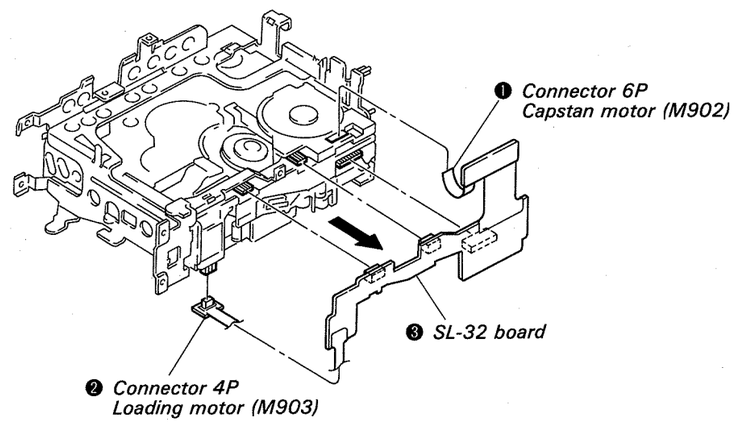

2-13. REMOVAL OF EVF ASSEMBLY (VF-42 BOARD)

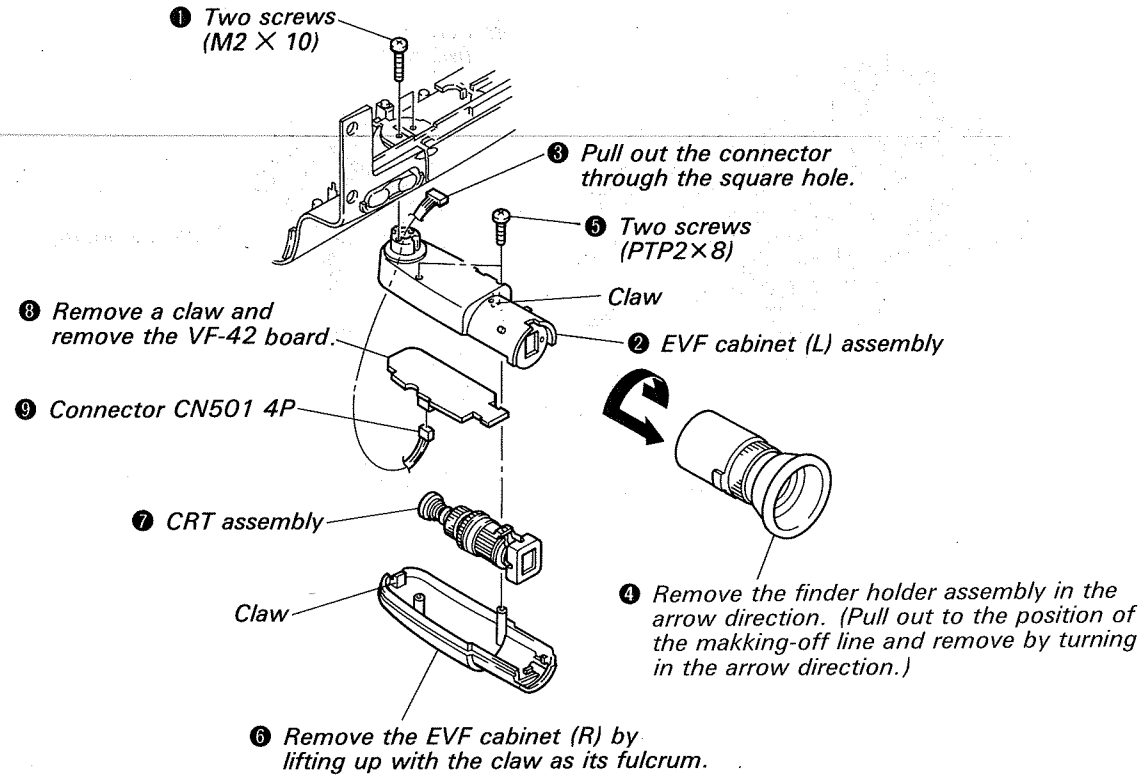

2-14. INTERNAL VIEWS

— Left Side —

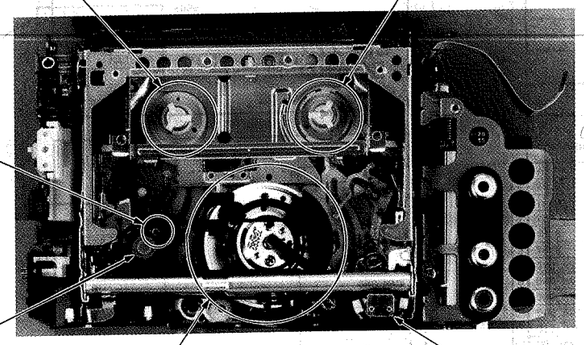

— Right Side —

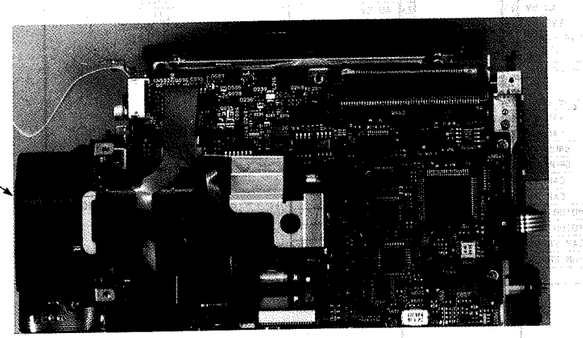

— Lower Side —

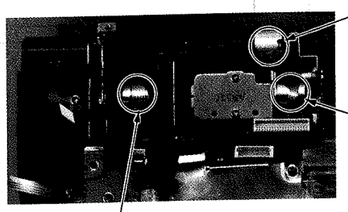

SECTION 3
DIAGRAMS

3-1. CIRCUIT BOARDS LOCATION

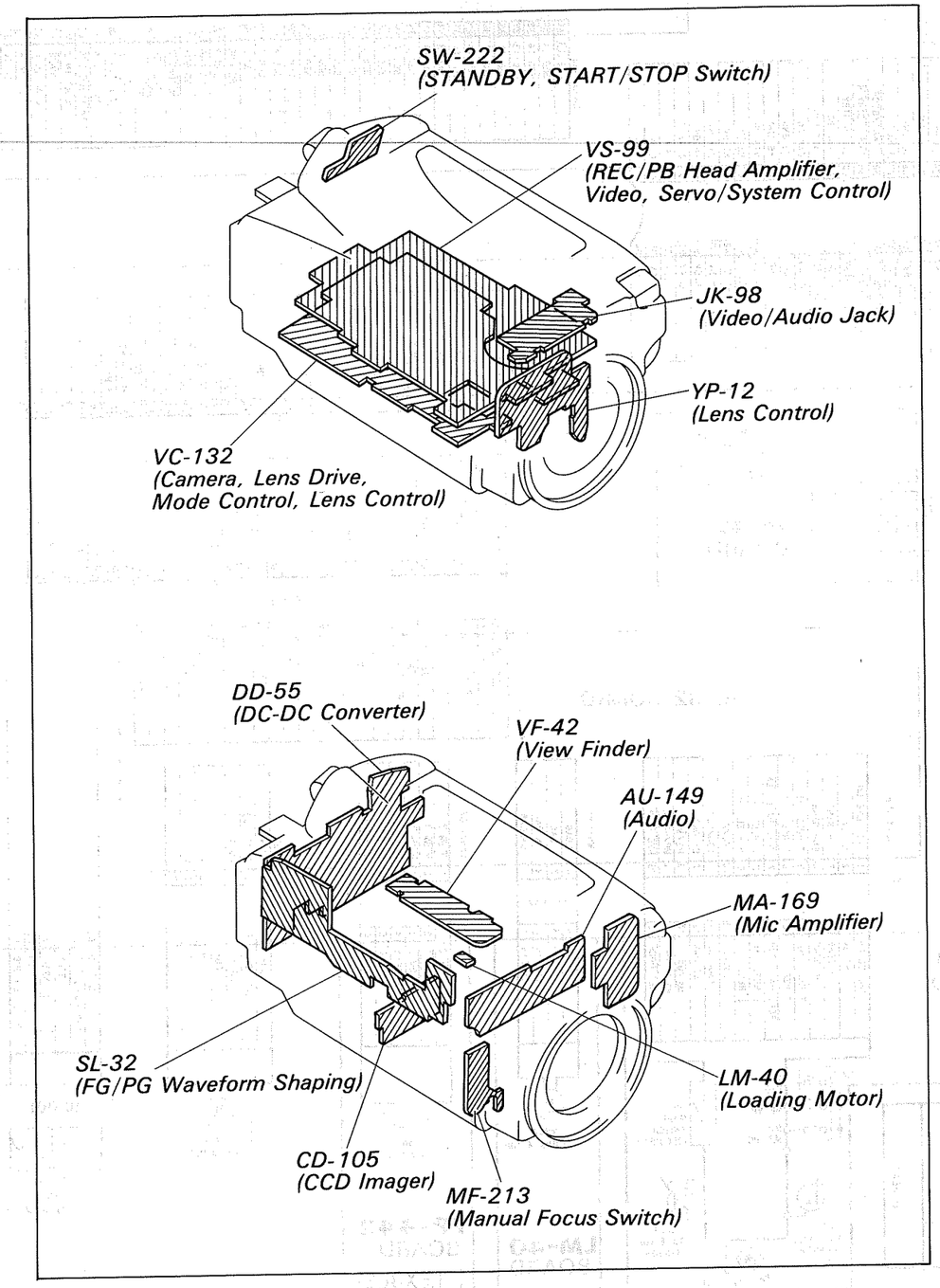

SECTION 3
DIAGRAMS

3-1. CIRCUIT BOARDS LOCATION

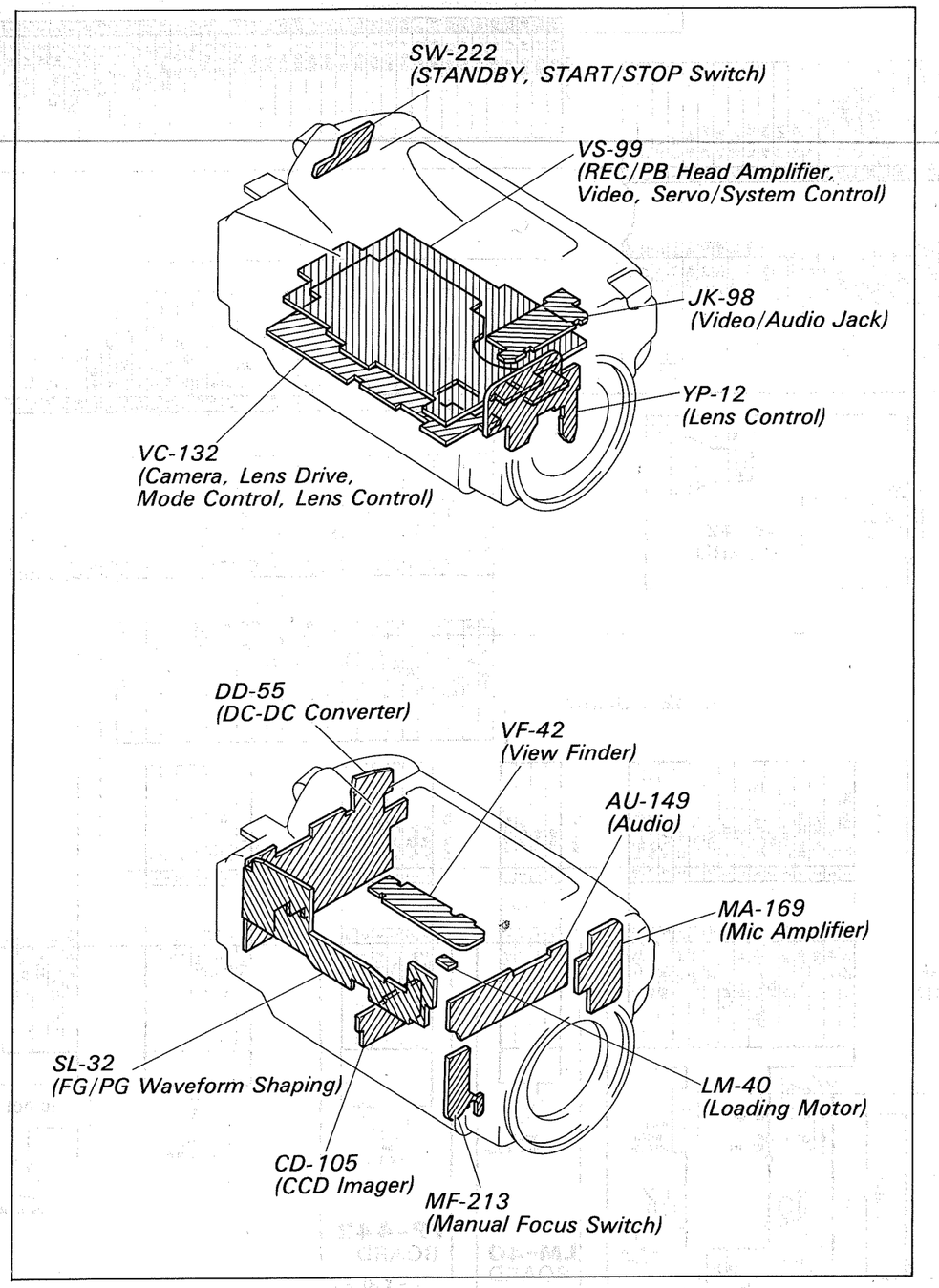

SECTION 4
PRINTED WIRING BOARDS AND SCHEMATIC DIAGRAMS

4-1. FRAME SCHEMATIC DIAGRAM

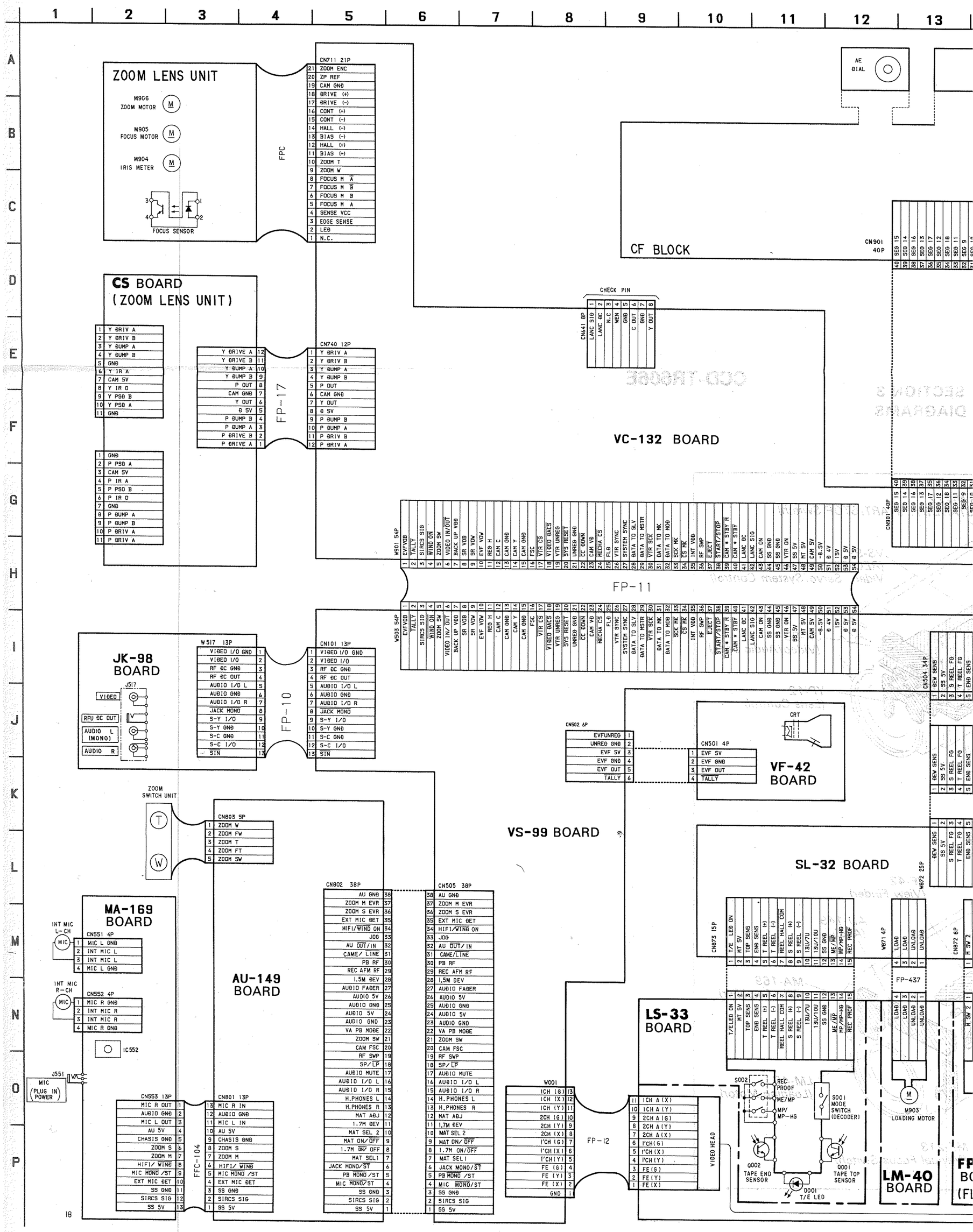

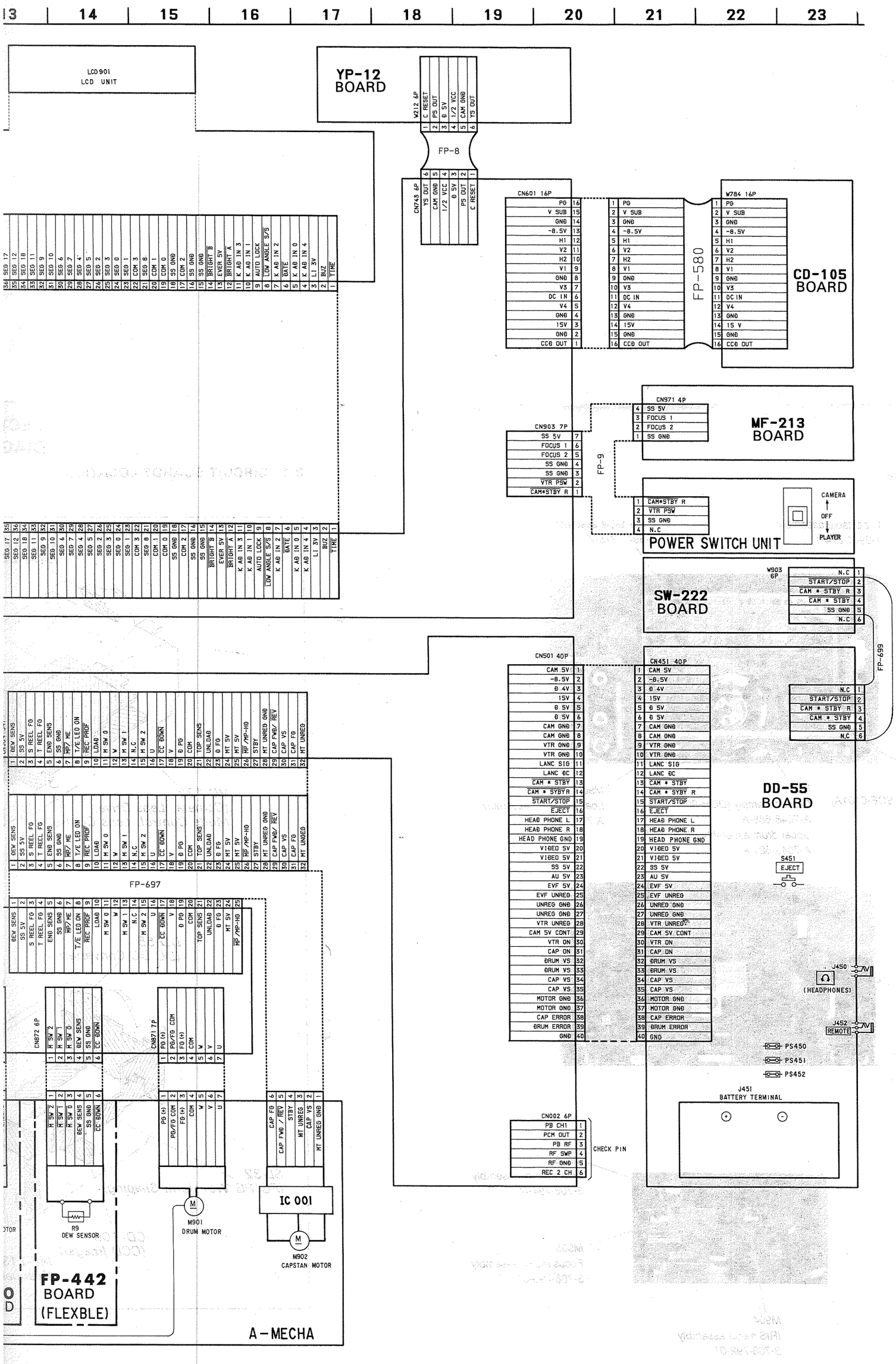
13 14 15 16 17 18 19 20 21 22 23
LCD 901
LCD UNIT
YP-12
BOARD
W212 6P
1 C RESET
2 P5 OUT
3 B 5V
4 1/2 VCC
5 CAM GND
6 Y5 OUT
FP-8
CN743 6P
6 Y5 OUT
5 CAM GND
4 1/2 VCC
3 B 5V
2 P5 OUT
1 C RESET
CN601 16P
PG 16
V SUB 15
GND 14
-8.5V 13
H1 12
V2 11
H2 10
V1 9
GND 8
V3 7
DC IN 6
V4 5
GND 4
15V 3
GND 2
CCD OUT 1
FP-580
W784 16P
CD-105
BOARD
CN971 4P
4 SS 5V
3 FOCUS 1
2 FOCUS 2
1 SS GND
MF-213
BOARD
CN903 7P
SS 5V 7
FOCUS 1 6
FOCUS 2 5
SS GND 4
SS GND 3
VTR PSW 2
CAM*STBY R 1
FP-9
1 CAM*STBY R
2 VTR PSW
3 SS GND
4 N.C
POWER SWITCH UNIT
CAMERA
OFF
PLAYER
W903 6P
N.C 1
START/STOP 2
CAM * STBY R 3
CAM * STBY 4
SS GND 5
N.C 6
SW-222
BOARD
FP-699
CN501 40P
CN451 40P
DD-55
BOARD
S451
EJECT
J450
(HEADPHONES)
J452
REMOTE
PS450
PS451
PS452
J451
BATTERY TERMINAL
CN002 6P
PB CH1 1
PCM OUT 2
PB RF 3
RF SWP 4
RF GND 5
REC 2 CH 6
CHECK PIN
FP-697
CN872 6P
CN871 7P
R9
DEW SENSOR
M901
DRUM MOTOR
IC 001
M902
CAPSTAN MOTOR
FP-442
BOARD
(FLEXBLE)
A-MECHA

CD-105 (CCD IMAGER) PRINTED WIRING BOARD

— Ref. No. CD-105 BOARD: 1,000 series —

CD-105 BOARD(COMPONENT SIDE) **CD-105** BOARD (CONDUCTOR SIDE)

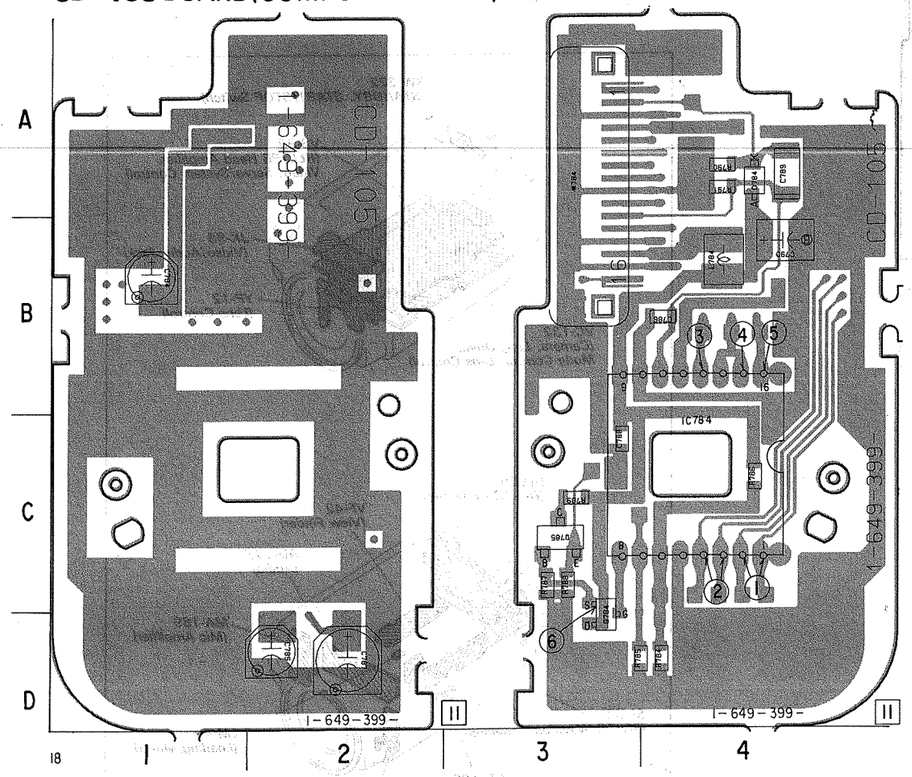

- **For printed wiring boards.**
- CD-105 board is the printed wiring board which has four layers structure but inner two layers' patterns are omitted.
- ●: Through hole is omitted.

Caution:	
Pattern face side: (conductor Side)	Parts on the pattern face side seen from the pattern face are indicated.
Parts face side: (Component side)	Parts on the parts face side seen from the parts face are indicated.

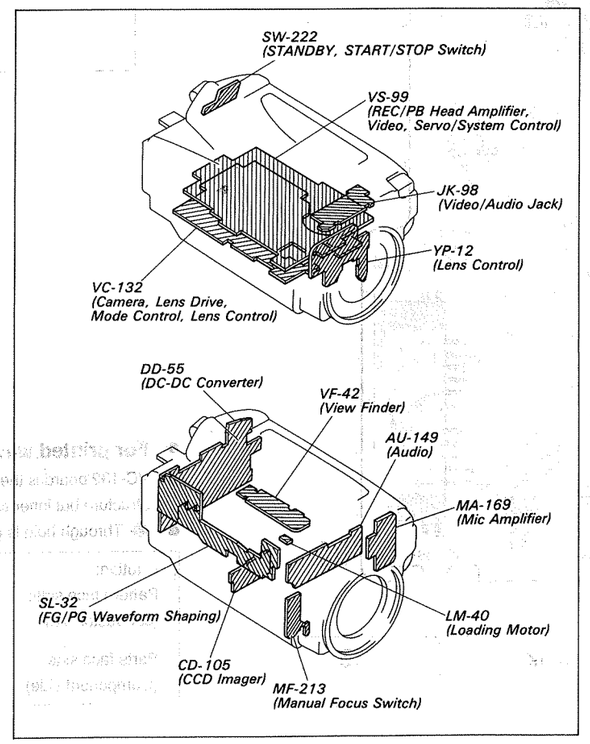

CD-105 (CCD IMAGER) SCHEMATIC DIAGRAM

— Ref. No. CD-105 BOARD: 1,000 series —

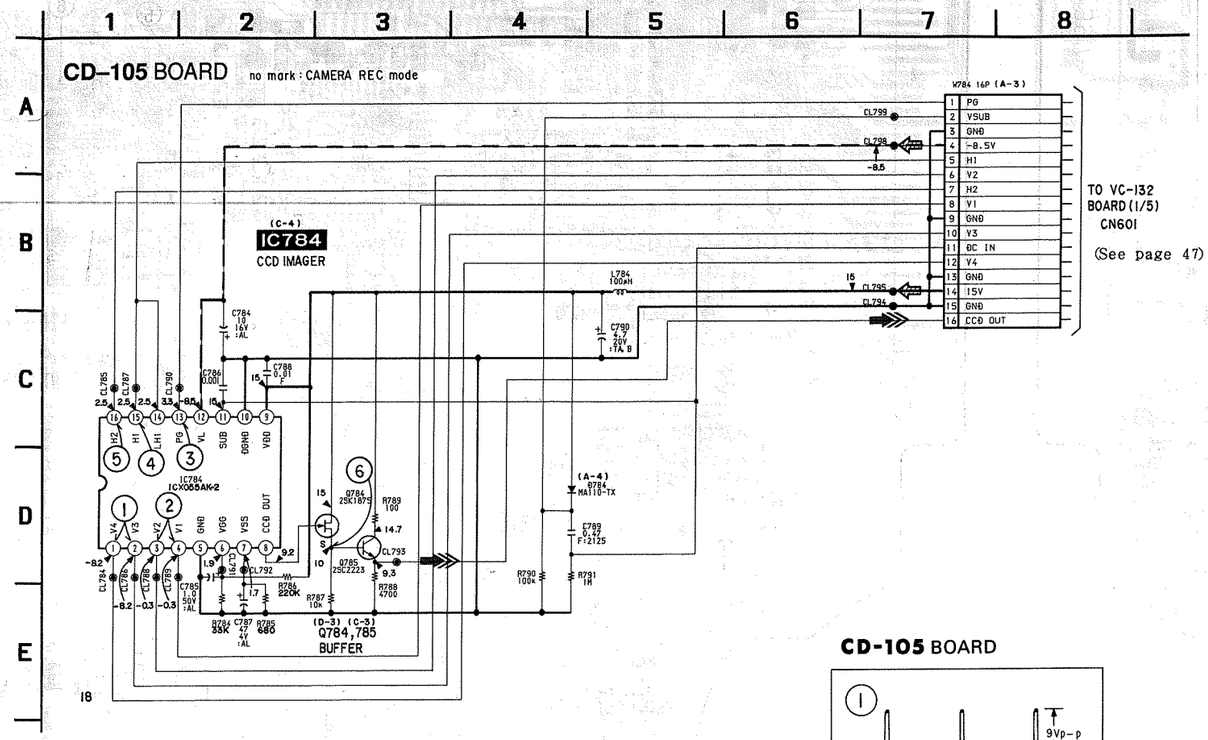

CD-105 BOARD

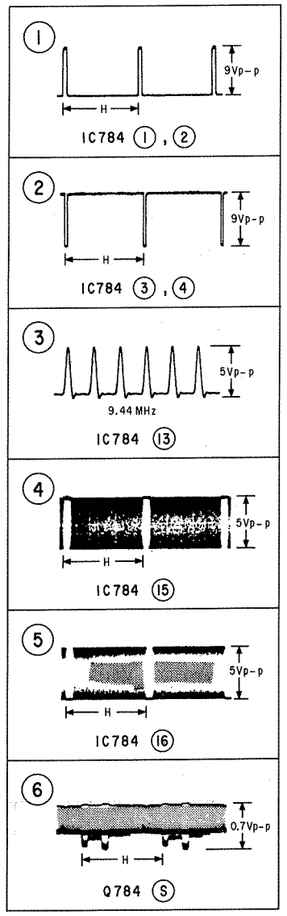

·SIGNAL PATH

	VIDEO Signal			AUDIO Signal
	CHROMA	Y	Y/CHROMA	
REC			➡	
PB				

Note on the CCD imager replacement

- Some of this units require the correction data by the CCD imager (IC784 on CD-105 board), some do not.
  The correction data is input in F page and addresses 1D to 2C of the camera micro processor (IC653 on VC-132 board), and also written on the CCD data label put on the shield case (upper) of the DD-55 board.
  The correction data is not required for the CCD imager supplied for repair. Therefore, when replacing the CCD imager to which the CCD data label is put, remove the CCD data label and input 00 to F page and addresses 1D to 2C of the camera micro processor. Refer to the camera adjustment for input method.
- The CCD imager is not mounted for the already mounted CD-105 board supplied as the repair parts.
  When replacing the CD-105 board, remove the CCD imager from the old board and install on the new board.
- Perform all adjustments of the camera block when the CCD imager has been replaced.
- Handle the CCD imager with attention such as MOS IC as it may be broken by static electricity in the structure.
  Also, prevent the receiving light section from dust attached and strong light.

4-2. PRINTE

THIS NOTE I
(In addition to

- **For printed**
- ○— : indica
- —— : indica
- ■ : Parts
- ▒ : Patter which
  (The other lay
- Circled numbe
- (B) or (F), characteristics
- ● : Throu

Caution:
Pattern face sid
(Conductor Sid
Parts face side:
(Component si

- **For schema**
- Caution when
  New parts mus
  Be careful no
  because it is d
- All resistors ar
  Chip resistor a
  kΩ : 1000Ω , M
- All capacitors a
  50V or less
  tantalums.
- All variable an
  unless otherwi
- : nonflam
- : fus
- : panel
- △ : interna
- : adjust
- —— : B+ Lin
- - - - : B– Lin
- : IN/OU
- Circled numbe

Note:
The component
mark ⚠ are criti
Replace only wi

When indicating
ence number, p
board name.

CD-105 (CCD IMAGER) SCHEMATIC DIAGRAM

— Ref. No. CD-105 BOARD: 1,000 series —

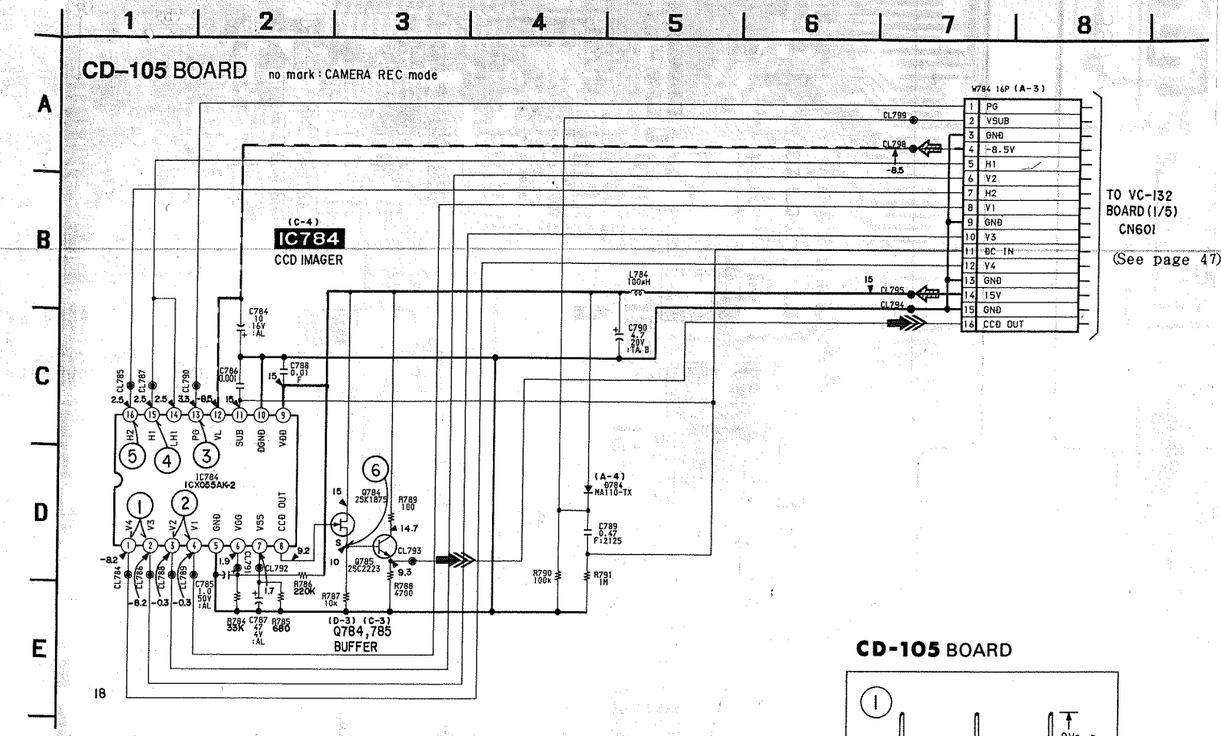

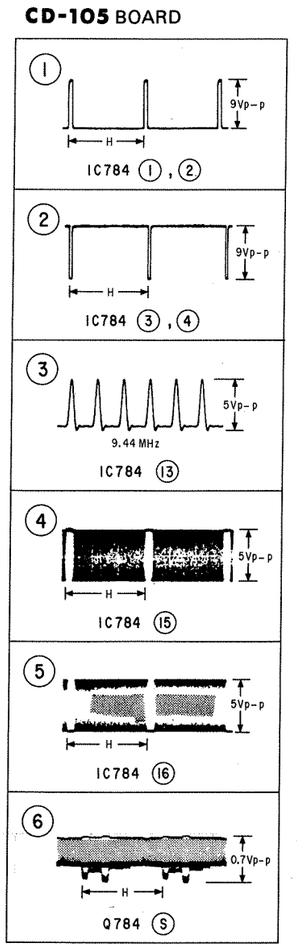

·SIGNAL PATH

	VIDEO Signal			AUDIO Signal
	CHROMA	Y	Y/CHROMA	
REC			➡	
PB				

Note on the CCD imager replacement

- Some of this units require the correction data by the CCD imager (IC784 on CD-105 board), some do not.
  The correction data is input in F page and addresses 1D to 2C of the camera micro processor (IC653 on VC-132 board), and also written on the CCD data label put on the shield case (upper) of the DD-55 board.
  The correction data is not required for the CCD imager supplied for repair. Therefore, when replacing the CCD imager to which the CCD data label is put, remove the CCD data label and input 00 to F page and addresses 1D to 2C of the camera micro processor. Refer to the camera adjustment for input method.
- The CCD imager is not mounted for the already mounted CD-105 board supplied as the repair parts.
  When replacing the CD-105 board, remove the CCD imager from the old board and install on the new board.
- Perform all adjustments of the camera block when the CCD imager has been replaced.
- Handle the CCD imager with attention such as MOS IC as it may be broken by static electricity in the structure.
  Also, prevent the receiving light section from dust attached and strong light.

THIS NOTE IS COMMON FOR PRINTED WIRING BOARDS AND SCHEMATIC DIAGRAMS.
(In addition to this , the necessary note is printed in each block.)

- **For printed wiring boards.**
- ○— : indicated a lead wire mounted on the component side.
- —— : indicated a lead wire mounted on the conductor side.
- ■ : Parts mounted on the conductor side.
- ▒ : Pattern from the side which enables seeing.
  (The other layers'patterns are not indicated.)
- Circled numbers refer to waveforms.
- (B) or (F), etc. of capacitors indicate the temperature characteristics.
- ● : Through hole is omitted.

Caution:	
Pattern face side: (Conductor Side)	Parts on the pattern face side seen from the pattern face are indicated.
Parts face side: (Component side)	Parts on the parts face side seen from the parts face are indicated.

- **For schematic diagrams.**
- Caution when replacing chip parts.
  New parts must be attached after removal of chip.
  Be careful not to heat the minuts side of tantalum capacitor, because it is damaged by the heat.
- All resistors are in ohms, 1/4W unless otherwise noted.
  Chip resistor are 1/10W unless otherwise noted.
  kΩ : 1000Ω , MΩ : 1000kΩ .
- All capacitors are in μF unless otherwise noted. pF: μμF.
  50V or less are not indicated except for electrolytics and tantalums.
- All variable and adjustable resistors have characteristic curve B, unless otherwise noted.
- : nonflammable resistor.
- : fusible resistor.
- : panel designation.
- △ : internal component.
- : adjustment for repeair.
- ▬▬ : B+ Line.
- - - - : B− Line.
- ➡ : IN/OUT direction of (+, −) B LINE.
- Circled numbers refer to waveforms.

Note:
The components identi- fied by mark ⚠ or dotted line with mark ⚠ are critical for safty.
Replace only with part number specified.

When indicating parts by reference number, please include the board name.

- **Measuring conditions voltage value and waveform. (CAMERA REC mode)**
- The object is color bar chart of pattern box.
- Voltages are dc between ground and measurement points. Readings are taken with a digital multimeter (DC 10MΩ).
- Voltage variations may be noted due to normal production tolerances.

1. Connection

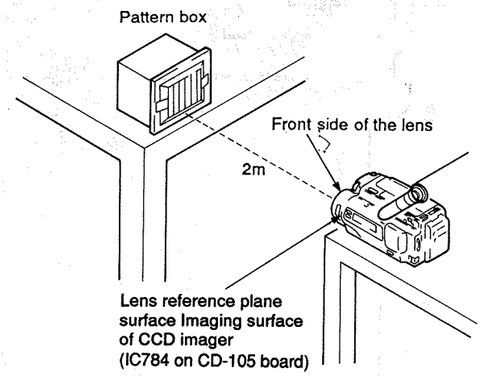

2. Adjust the distance so that the output waveform of Fig. a and the Fig. b can be obtain.

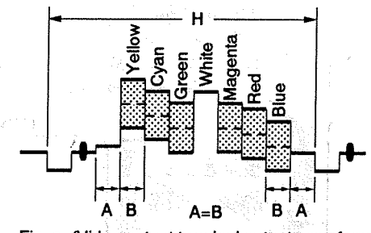

Fig. a (Video output terminal output waveform)

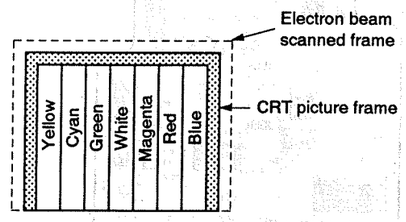

Fig. (Picture on monitor TV)

(VTR REC, VTR PB mode)

- Voltages are dc between ground and measurement points.
- Readings are taken with a color-bar signal input.
- Readings are taken with a digital multimeter (DC10MΩ).
- Voltage variations may be noted due to normal production tolerances.

Note : Refer to "9-1-3. How to set the REC mode in the model without REC switch. " in VIDEO SECTION ADJUSTMENTS.

VC-132 (CAMERA, LENS DRIVE, MODE CONTROL, LENS CONTROL) PRINTED WIRING BOARD

— Ref. No. VC-132 BOARD: 2,000 series —

VC-132 BOARD (COMPONENT SIDE)

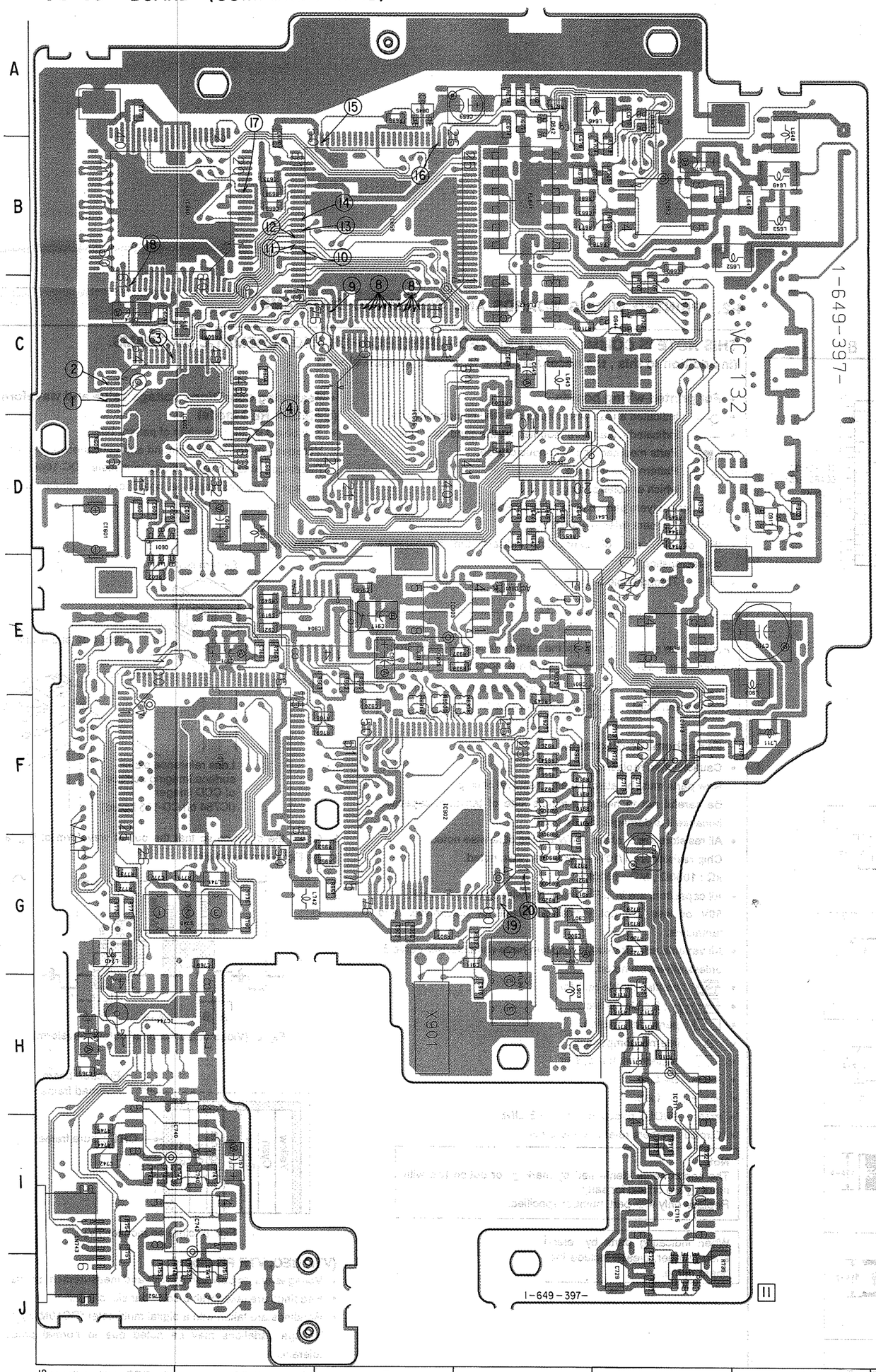

VC-132 BOARD (CONDUCTOR S

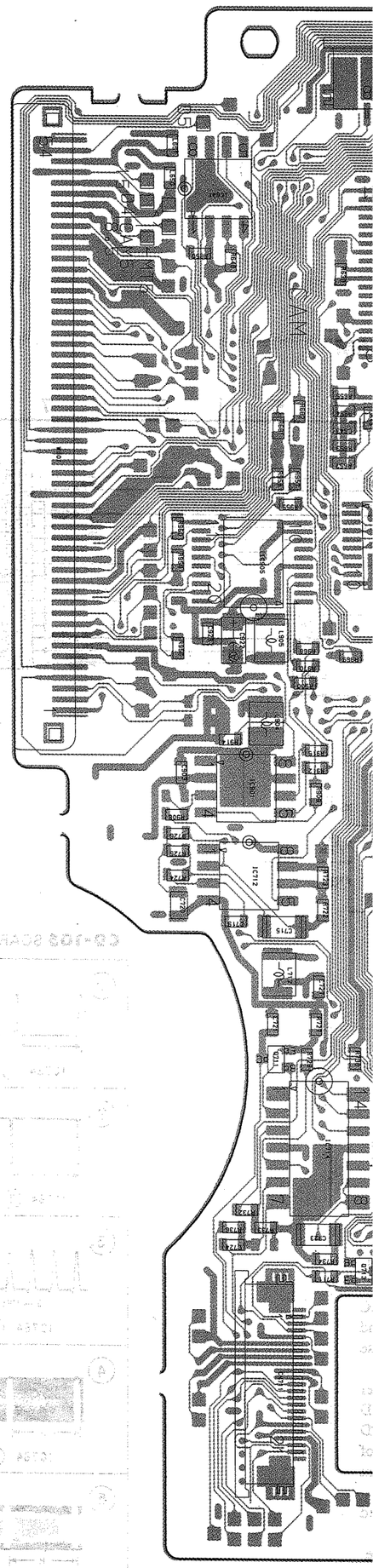

CTOR SIDE)

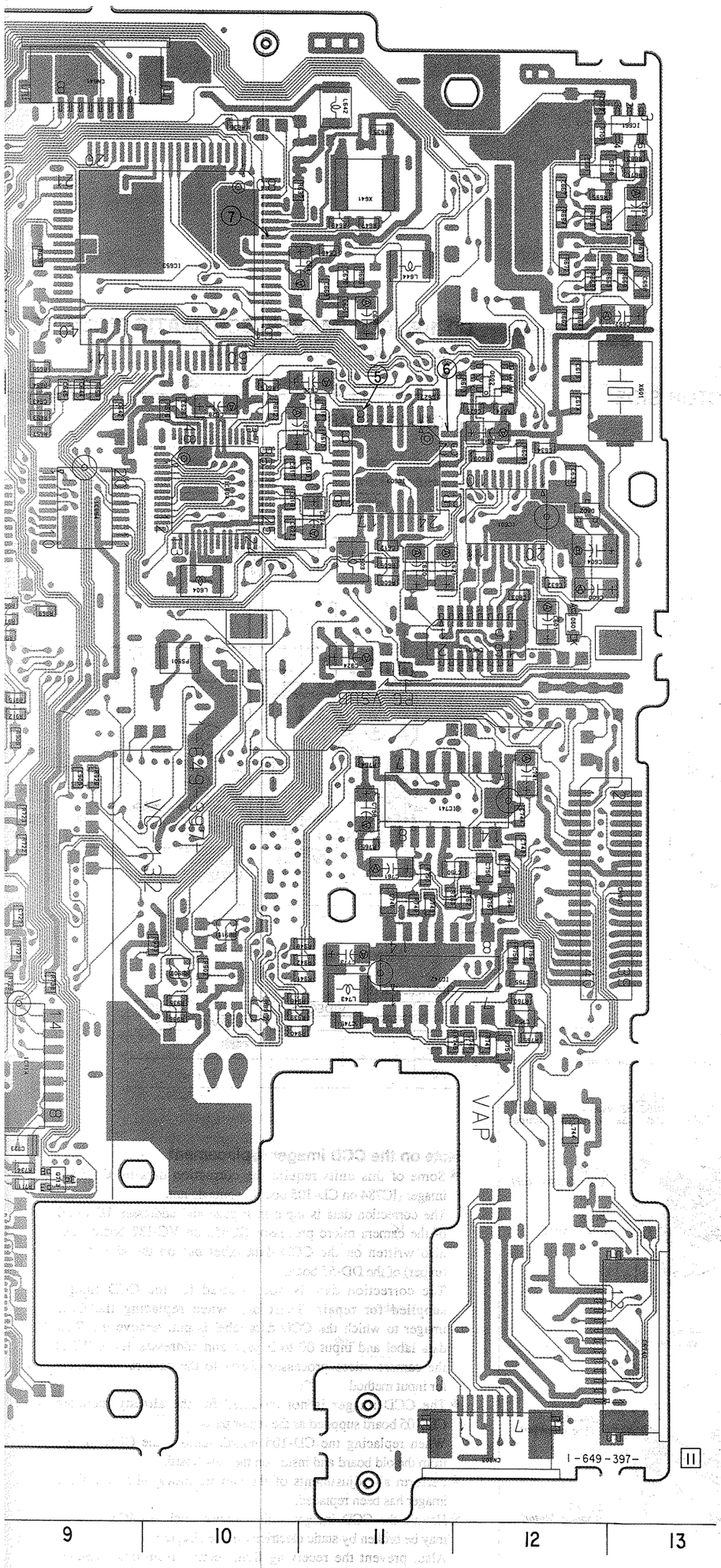

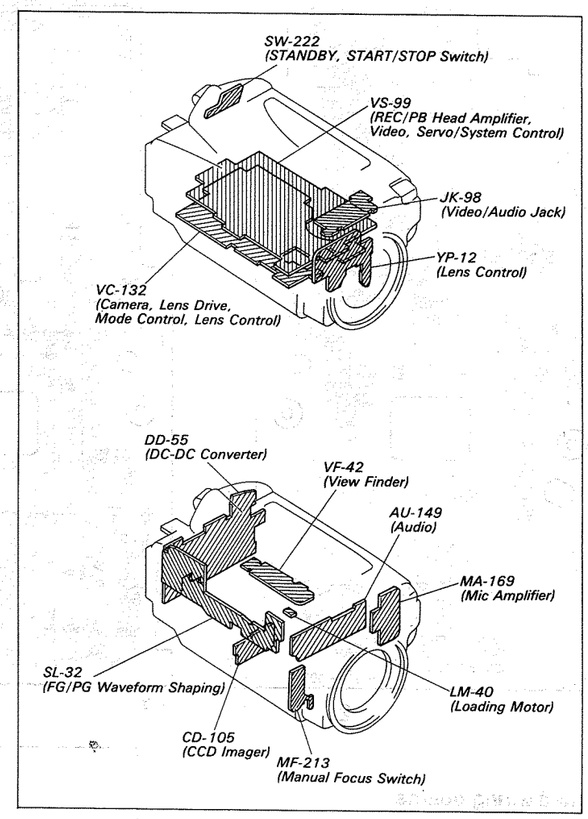

- **For printed wiring boards.**
- VC-132 board is the printed wiring board which has four layers structure but inner two layers' patterns are omitted.
- ●: Through hole is omitted.

Caution:	
Pattern face side: (conductor Side)	Parts on the pattern face side seen from the pattern face are indicated.
Parts face side: (Component side)	Parts on the parts face side seen from the parts face are indicated.

VC-132 (CAMERA)SCHEMATIC DIAGRAM

— Ref. No. VC-132 BOARD: 2,000 series —

● Refer to page 44 for printed wiring board.

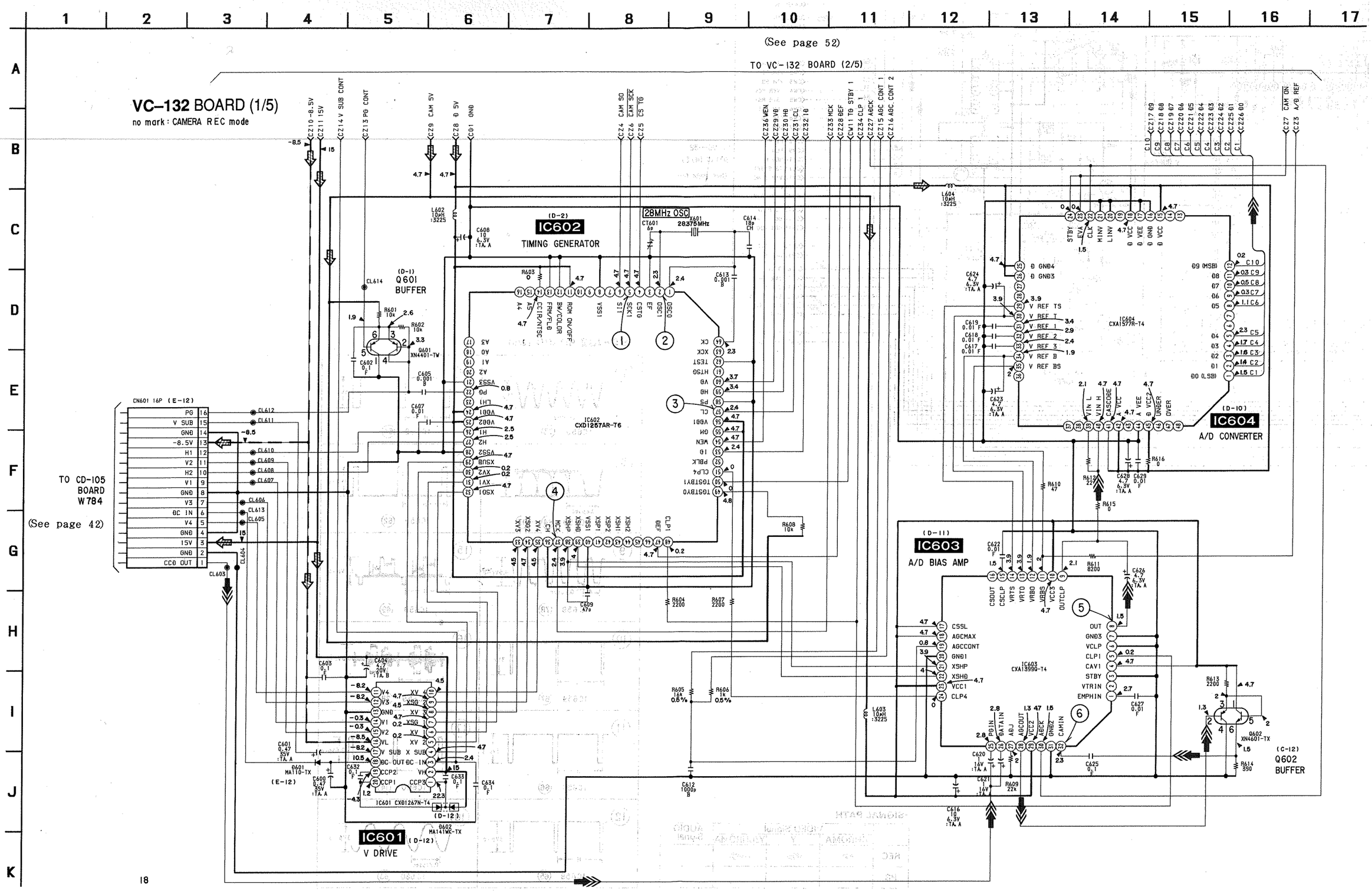

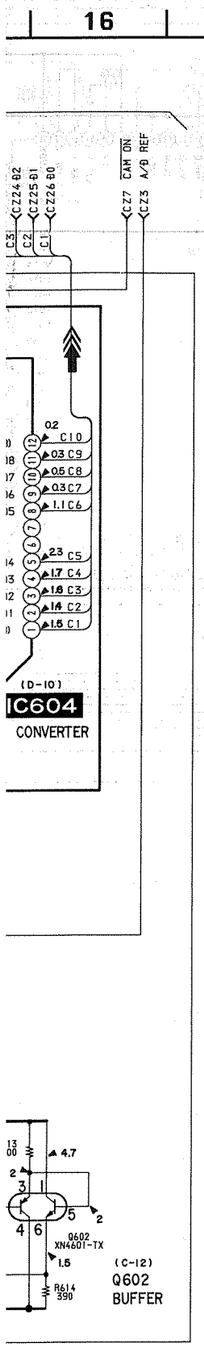

VC-132 BOARD (1/5)

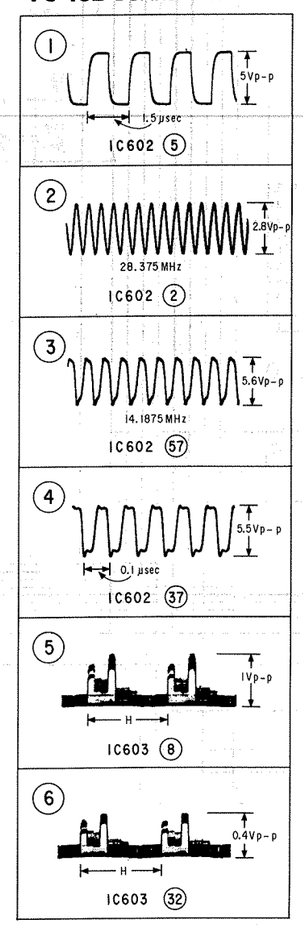

·SIGNAL PATH

	VIDEO Signal			AUDIO Signal
	CHROMA	Y	Y/CHROMA	
REC			➡	
PB				

VC-132 (CAMERA) SCHEMATIC DIAGRAM

— Ref. No. VC-132 BOARD: 2,000 series —

● Refer to page 44 for printed wiring board.

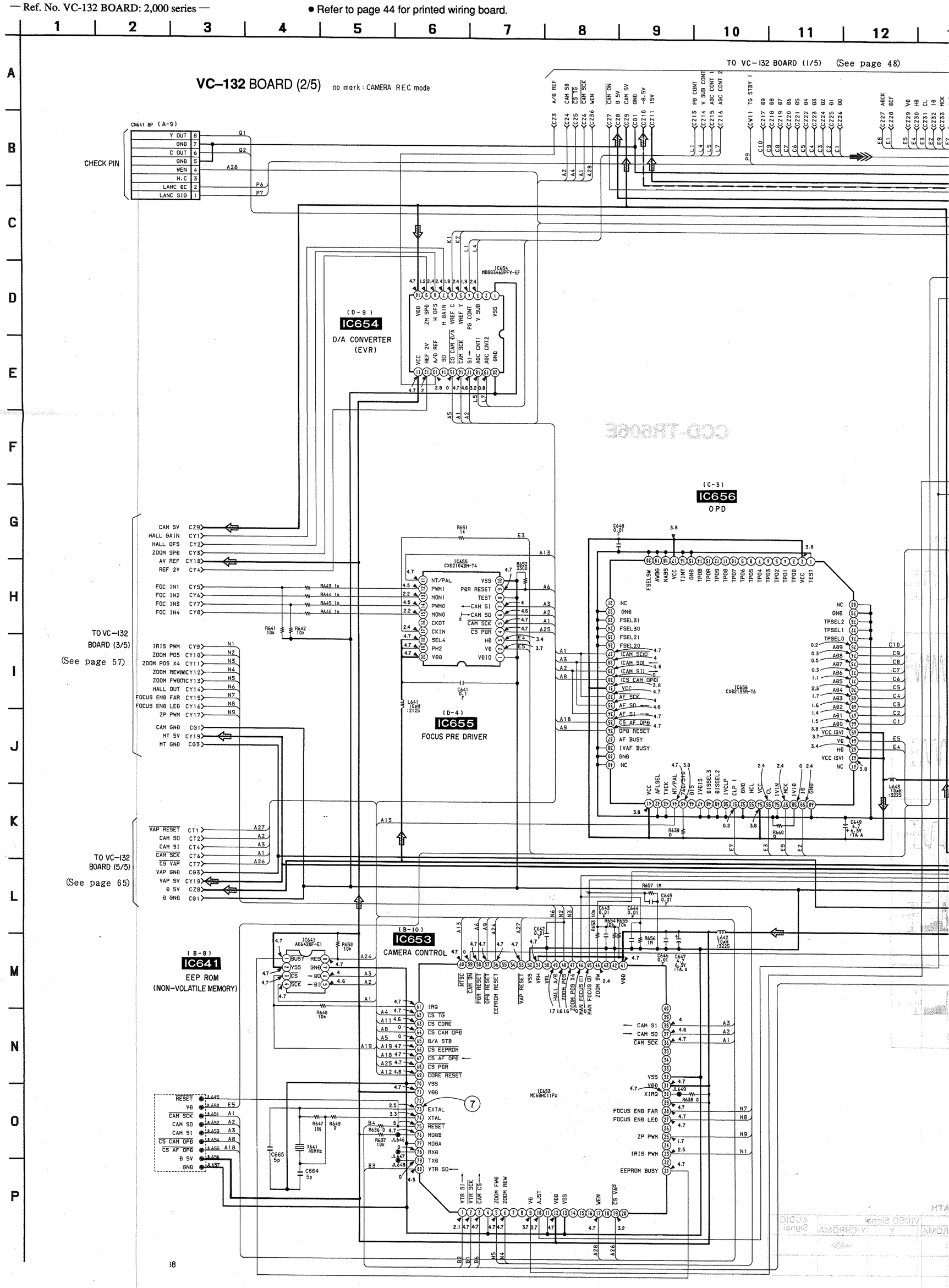

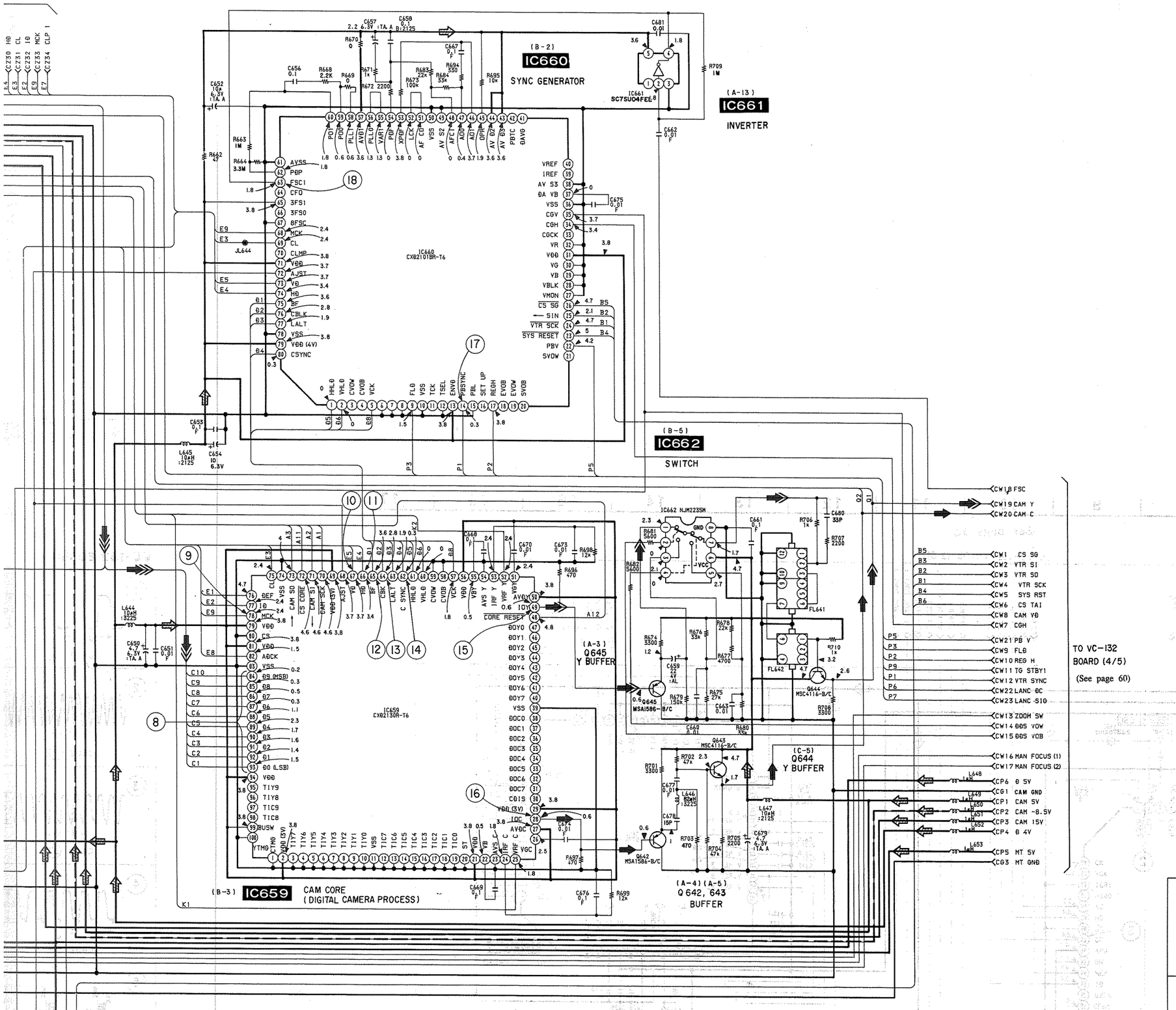

·SIGNAL PATH

	VIDEO Signal			AUDIO Signal
	CHROMA	Y	Y/CHROMA	
REC	➡	➡	➡	
PB				

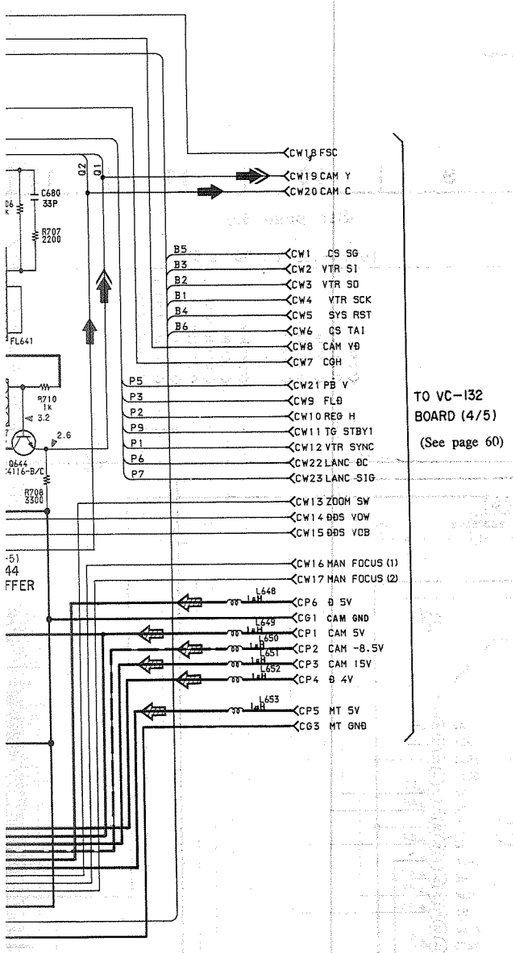

VC-132 BOARD (2/5)

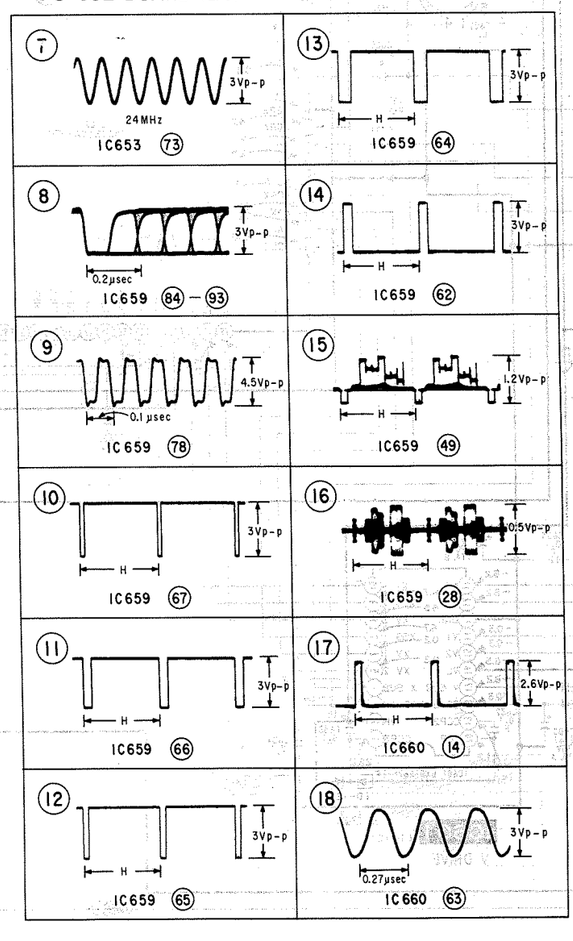

·SIGNAL PATH

	VIDEO Signal			AUDIO Signal
	CHROMA	Y	Y/CHROMA	
REC	➡	➡	➡	
PB				

VC-132 (LENS DRIVE) SCHEMATIC DIAGRAM

— Ref. No. VC-132 BOARD: 2,000 series —

● Refer to page 44 for printed wiring board.

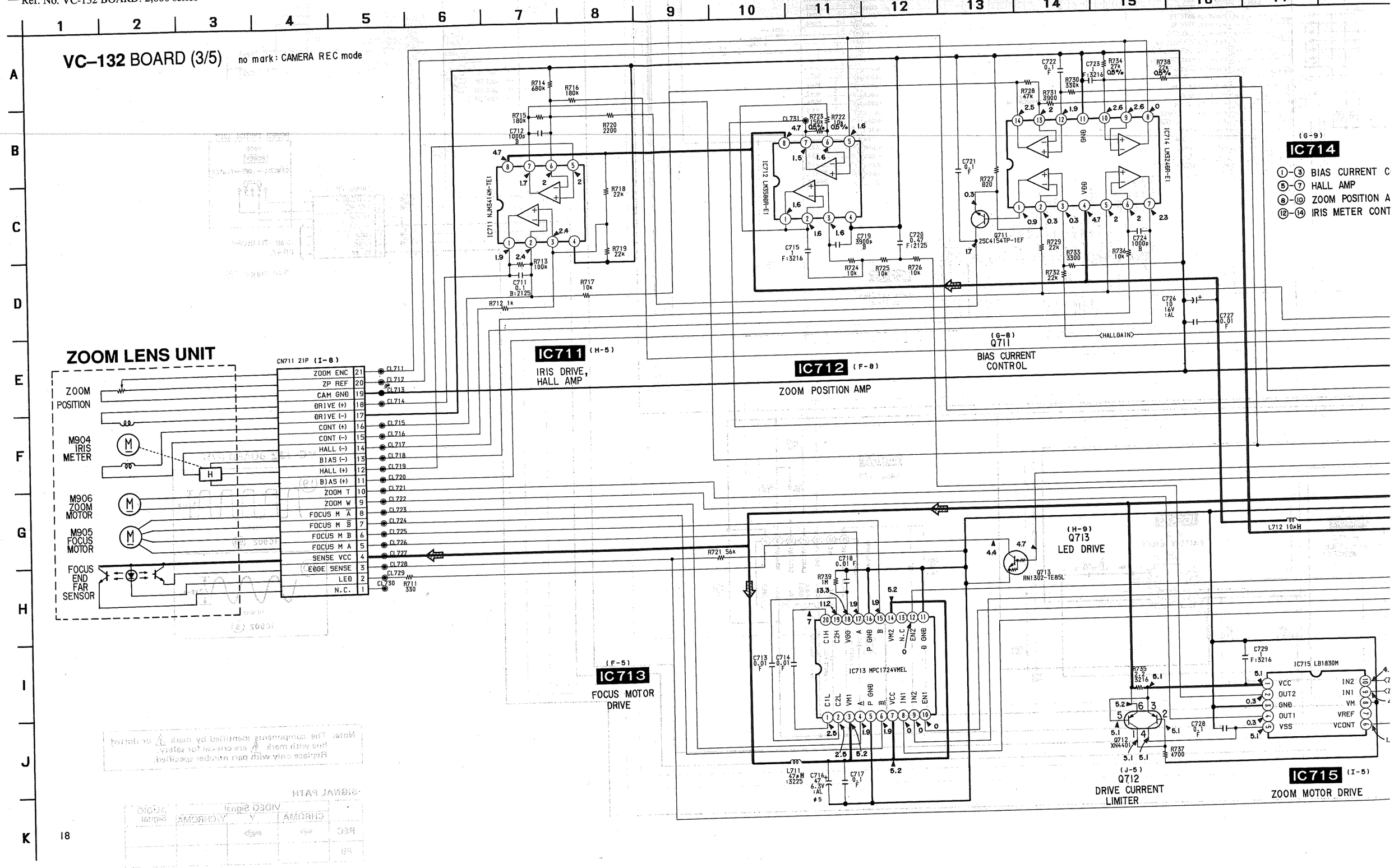

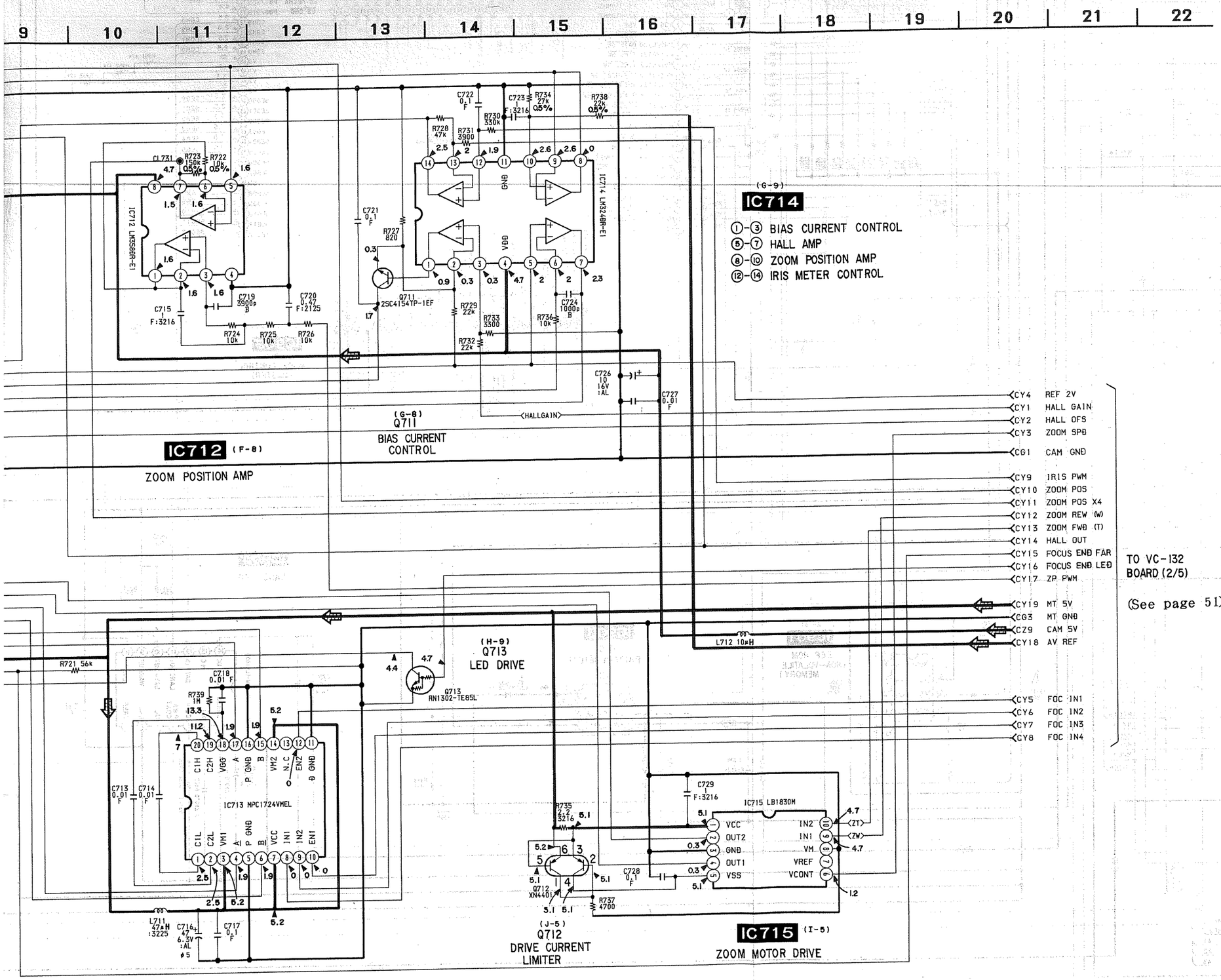
IC714
(G-9)
① - ③ BIAS CURRENT CONTROL
⑤ - ⑦ HALL AMP
⑧ - ⑩ ZOOM POSITION AMP
⑫ - ⑭ IRIS METER CONTROL
IC712 (F-8)
ZOOM POSITION AMP
(G-8)
Q711
BIAS CURRENT CONTROL
(H-9)
Q713
LED DRIVE
(J-5)
Q712
DRIVE CURRENT LIMITER
IC715 (I-5)
ZOOM MOTOR DRIVE
IC713 MPC1724VMEL
IC715 LB1830M
IC714 LM324BI-E1
IC712 LM358BI-E1
CY4 REF 2V
CY1 HALL GAIN
CY2 HALL OFS
CY3 ZOOM SPD
CG1 CAM GND
CY9 IRIS PWM
CY10 ZOOM POS
CY11 ZOOM POS X4
CY12 ZOOM REW (W)
CY13 ZOOM FWD (T)
CY14 HALL OUT
CY15 FOCUS END FAR
CY16 FOCUS END LED
CY17 ZP PWM
CY19 MT 5V
CG3 MT GND
CZ9 CAM 5V
CY18 AV REF
CY5 FOC IN1
CY6 FOC IN2
CY7 FOC IN3
CY8 FOC IN4
TO VC-132 BOARD (2/5)
(See page 51)

LENS DRIVE

VC-132 (MODE CONTROL) SCHEMATIC DIAGRAM

— Ref. No. VC-132 BOARD: 2,000 series —

● Refer to page 44 for printed wiring board.

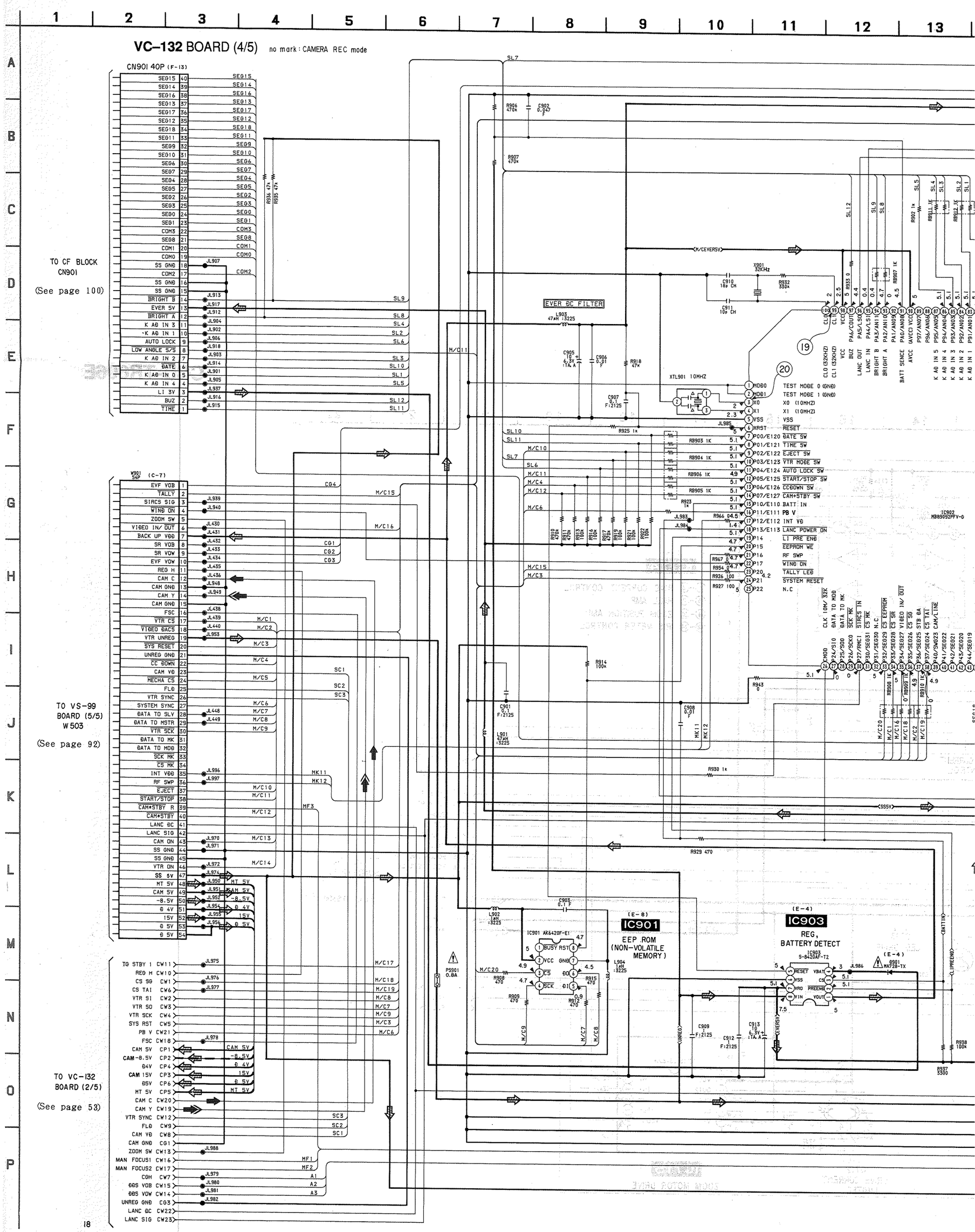

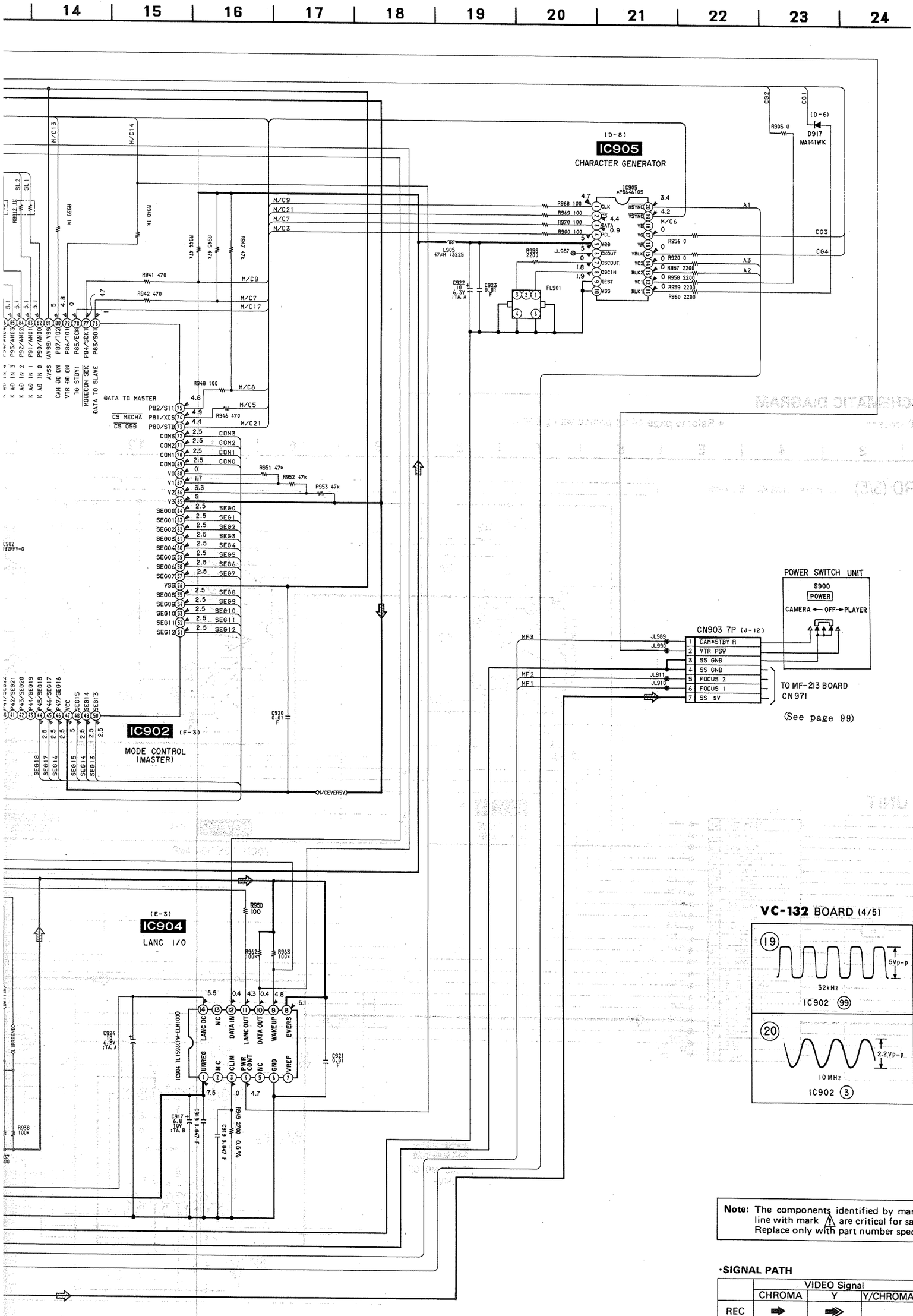

VC-132 BOARD (4/5)

Note: The components identified by mark ⚠ or dotted line with mark ⚠ are critical for safety. Replace only with part number specified.

·SIGNAL PATH

	VIDEO Signal			AUDIO Signal
	CHROMA	Y	Y/CHROMA	
REC	➡	➡		
PB				

VC-132 (LENS CONTROL) SCHEMATIC DIAGRAM

— Ref. No. VC-132 BOARD: 2,000 series —

● Refer to page 44 for printed wiring board.

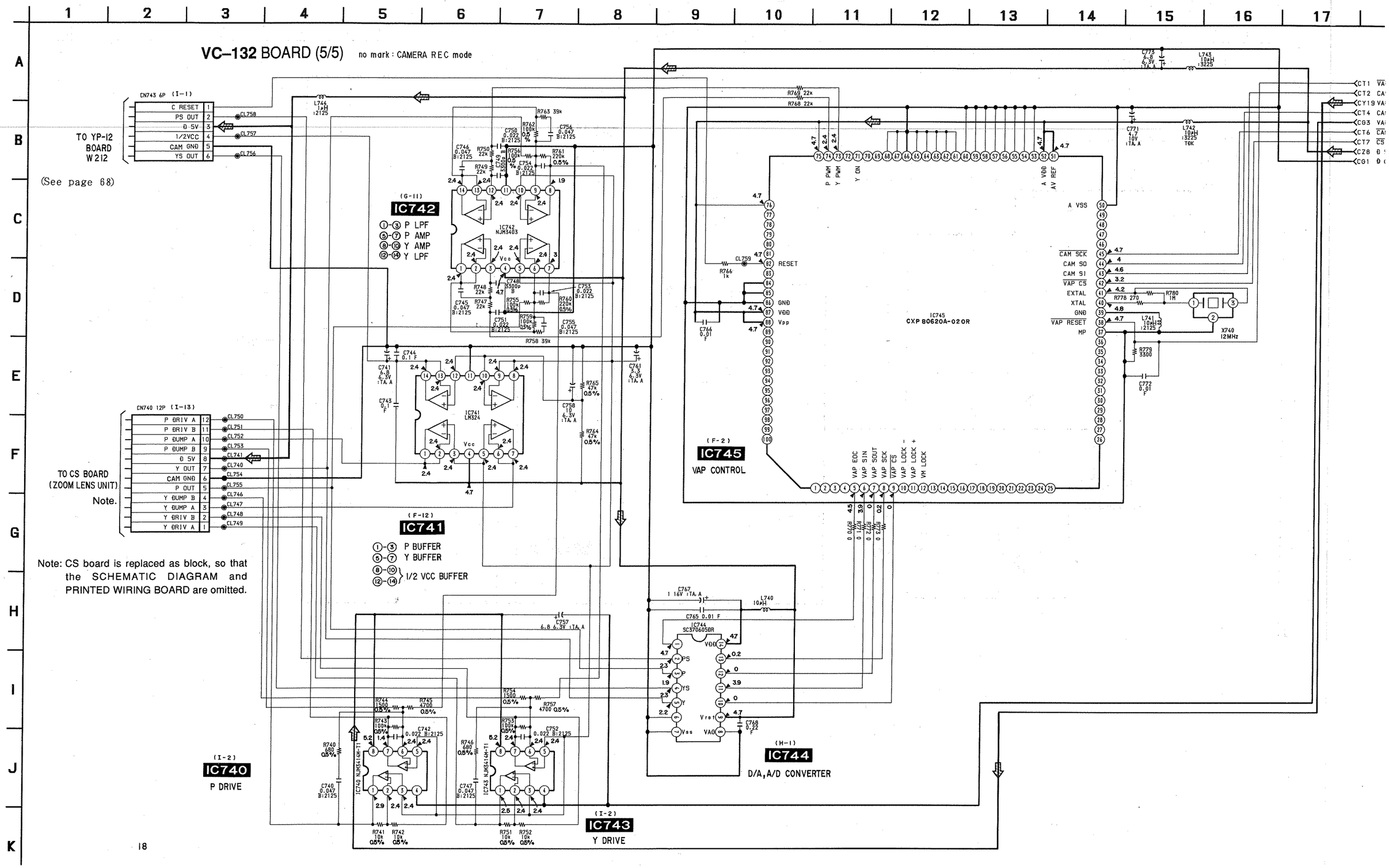

ed wiring board.

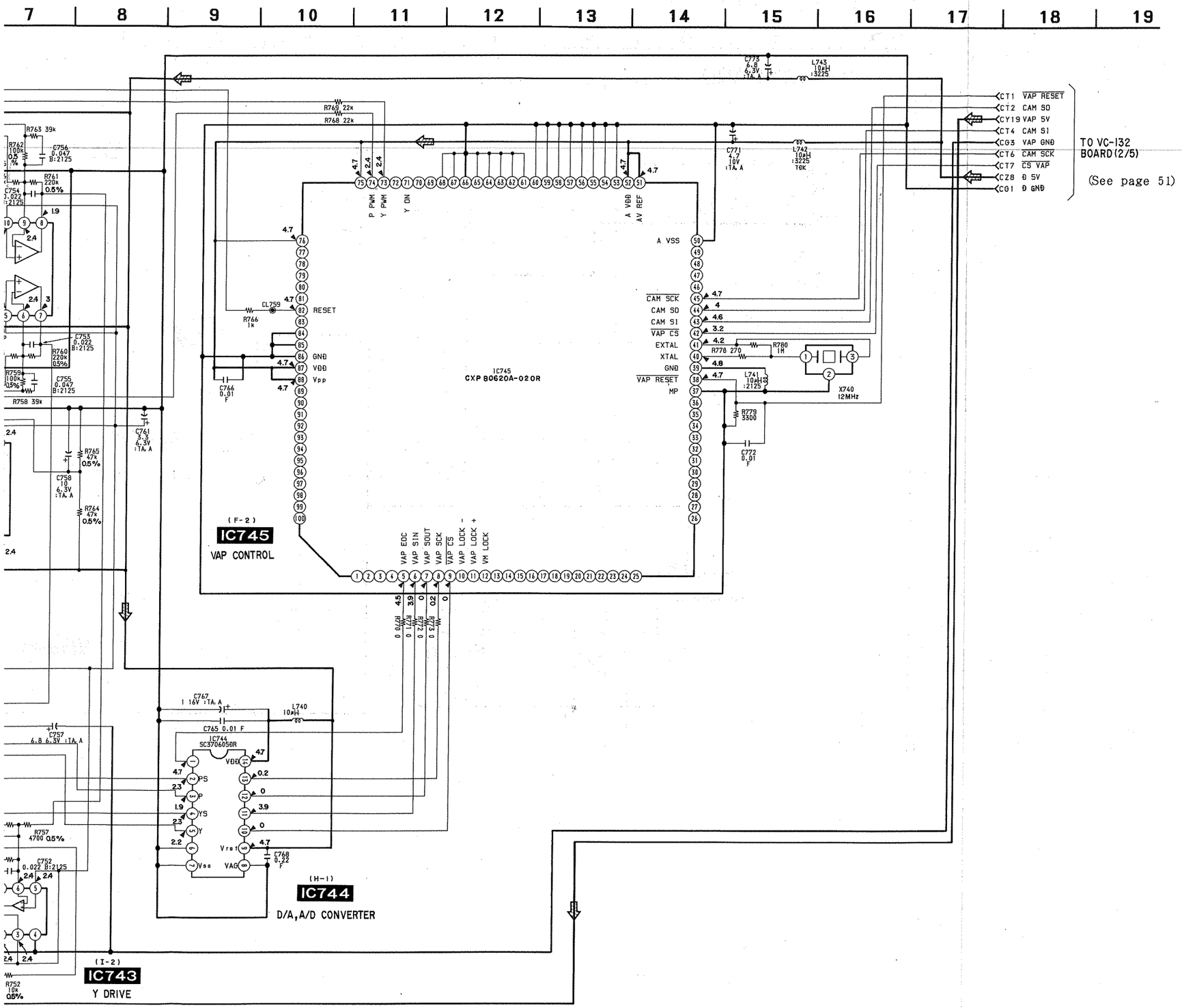

YP-12 (LENS CONTROL) SCHEMATIC DIAGRAM

— Ref. No. YP-12 BOARD: 2,000 series —

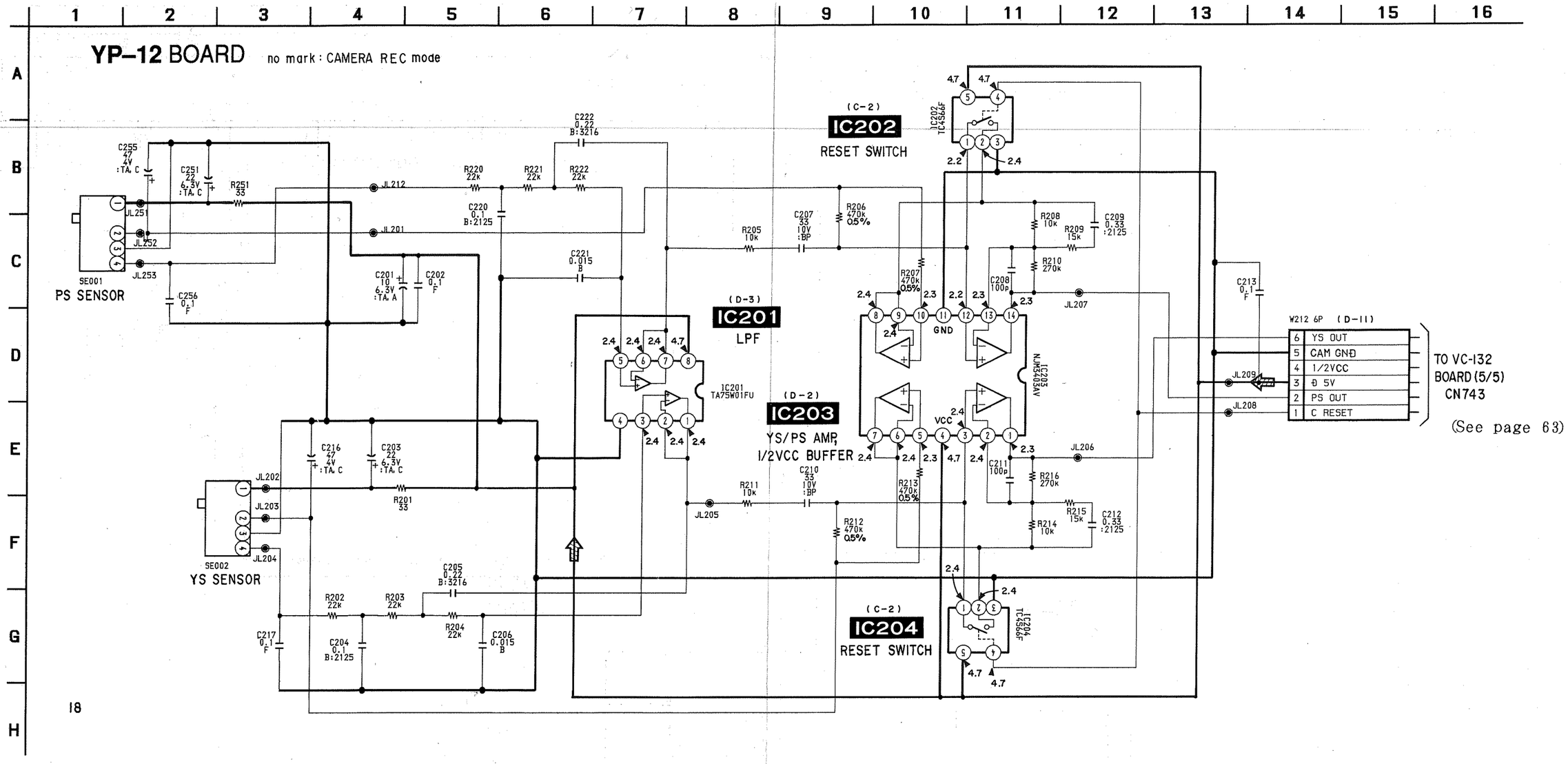

YP-12 (LENS CONTROL) PRINTED WIRING BOARD

— Ref. No. YP-12 BOARD: 2,000 series —

YP-12 BOARD (COMPONENT SIDE)

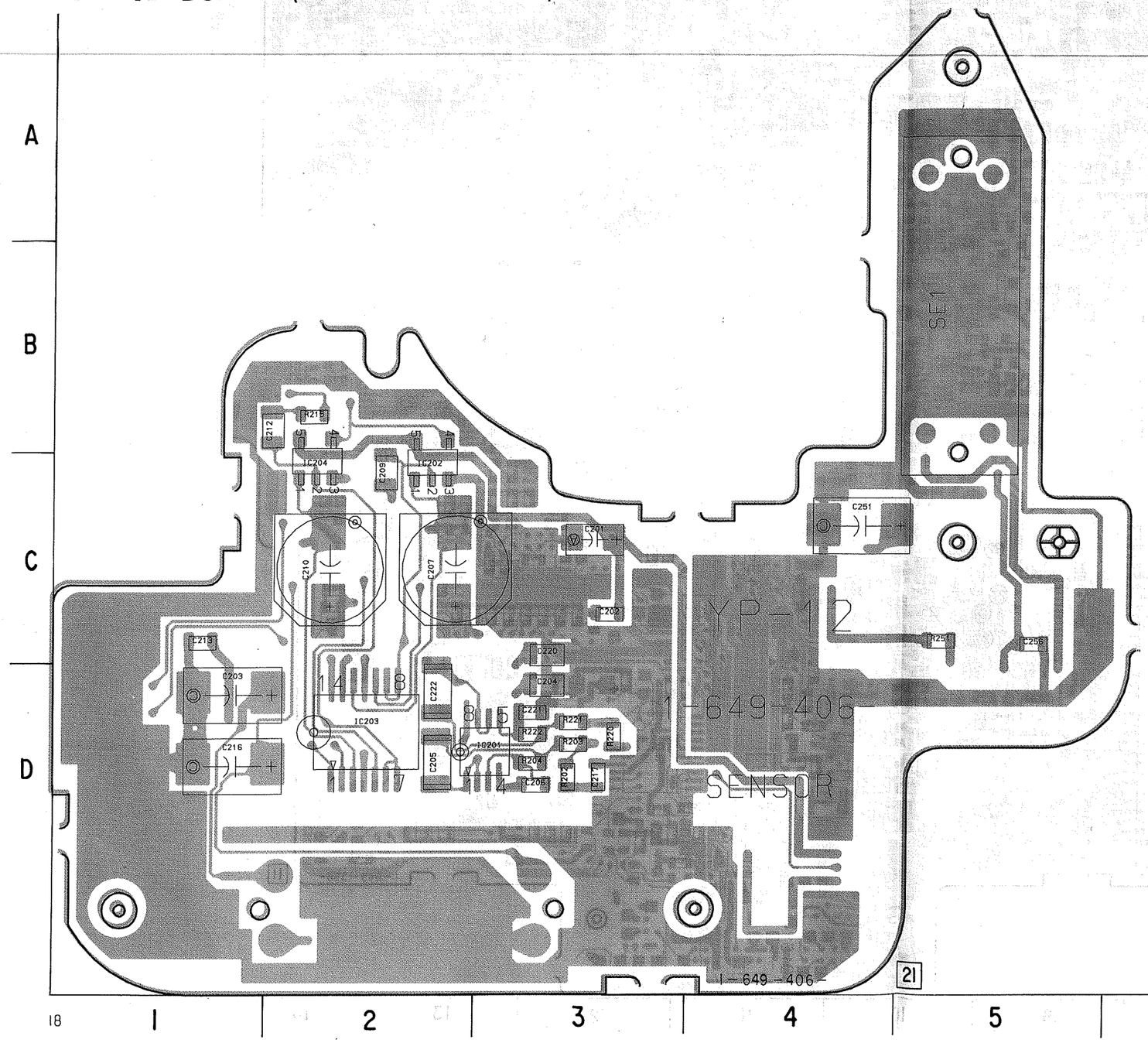

YP-12 BOARD (CONDUCTOR SIDE)

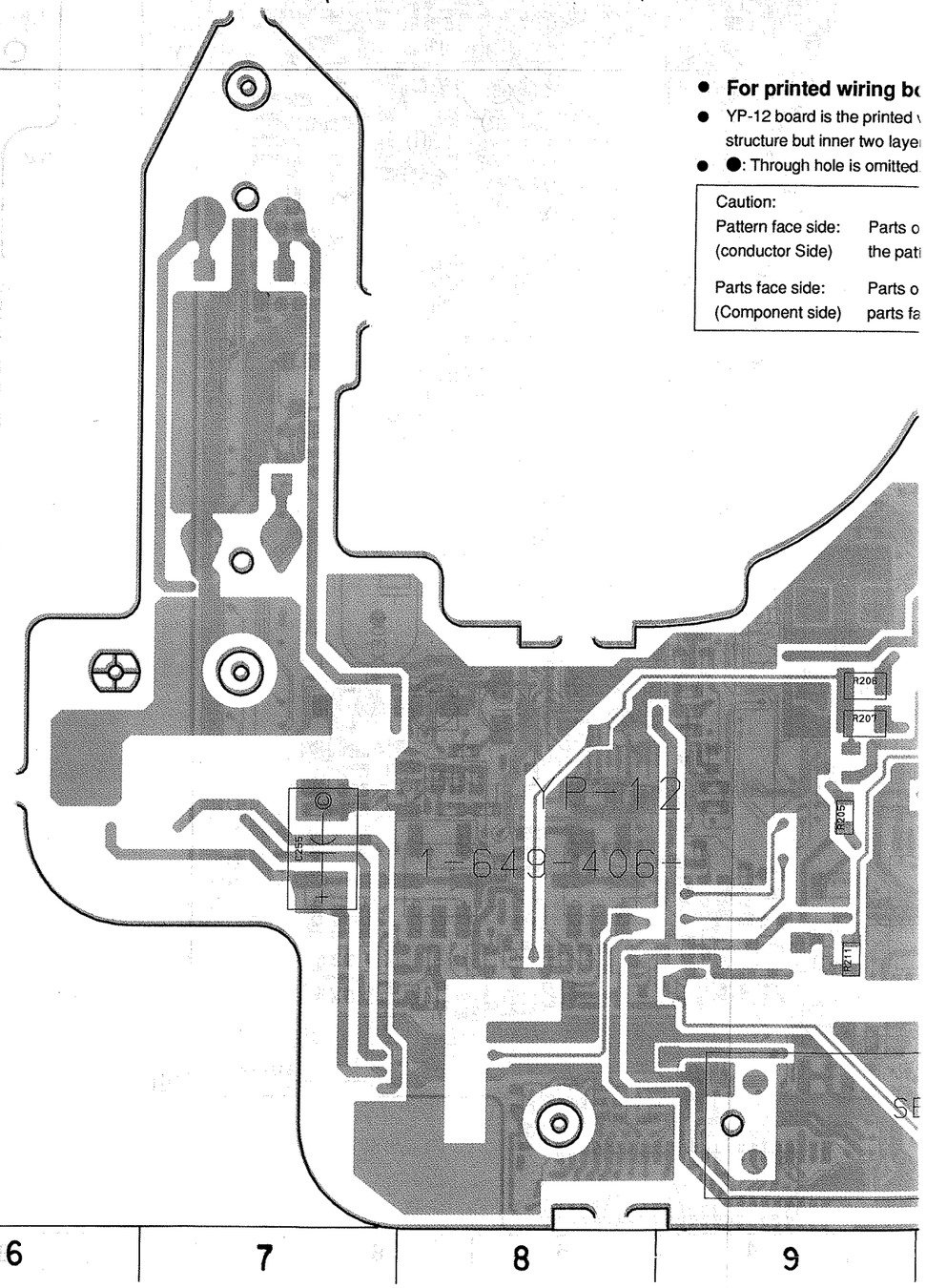

- **For printed wiring bo**
- YP-12 board is the printed
  structure but inner two laye
- ●: Through hole is omitted

Caution:	
Pattern face side: (conductor Side)	Parts o the pat
Parts face side: (Component side)	Parts o parts fa

YP-12 BOARD (CONDUCTOR SIDE)

- **For printed wiring boards.**
- YP-12 board is the printed wiring board which has four layers structure but inner two layers' patterns are omitted.
- ●: Through hole is omitted.

Caution:	
Pattern face side: (conductor Side)	Parts on the pattern face side seen from the pattern face are indicated.
Parts face side: (Component side)	Parts on the parts face side seen from the parts face are indicated.

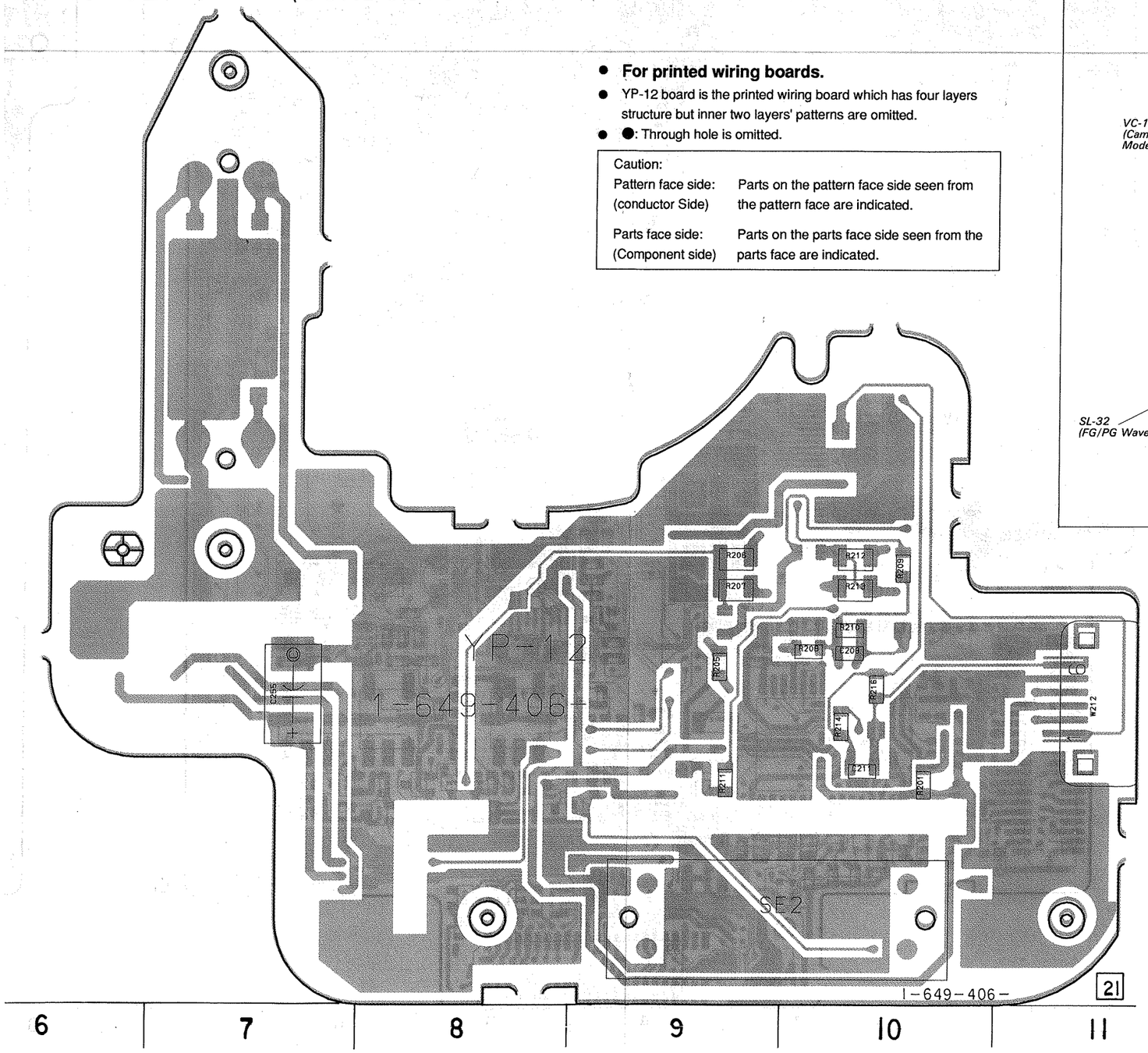

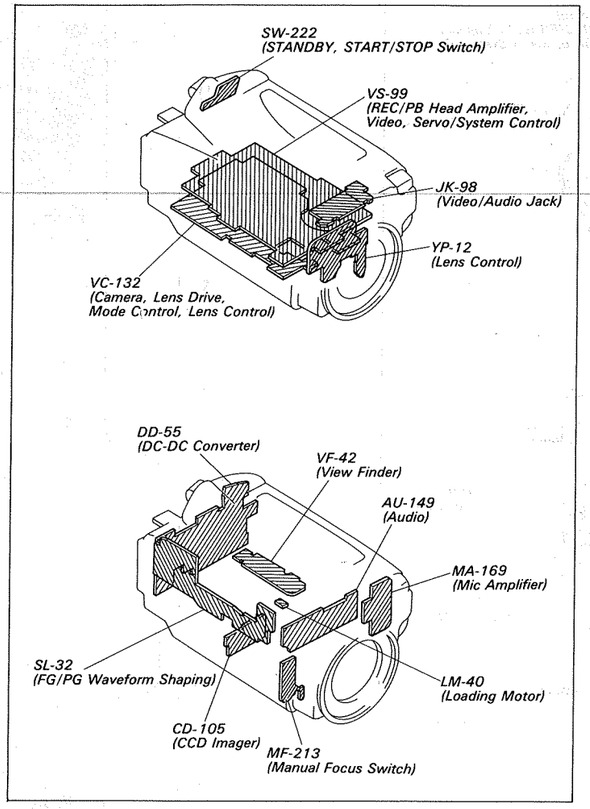

LENS CONTROL

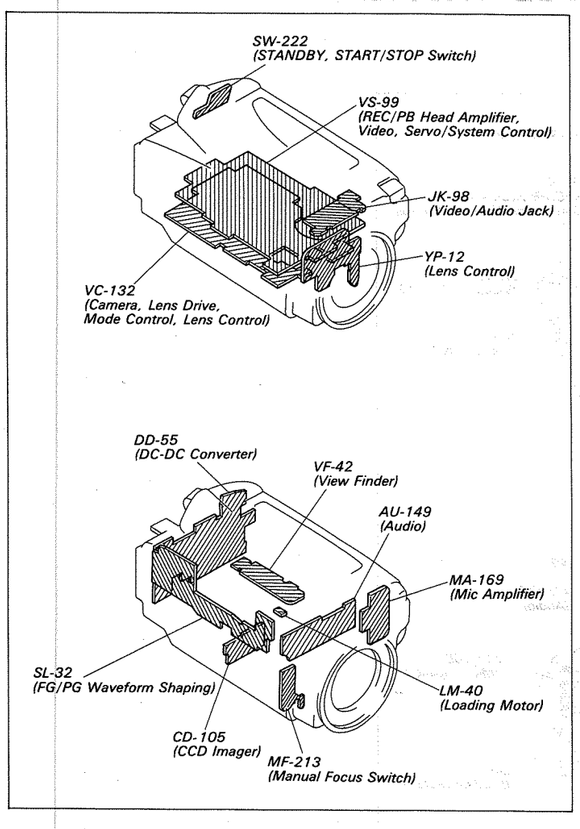

- **For printed wiring boards.**
- VS-99 board is the printed wiring board which has four layers structure but inner two layers' patterns are omitted.
- ●: Through hole is omitted.

Caution:	
Pattern face side: (conductor Side)	Parts on the pattern face side seen from the pattern face are indicated.
Parts face side: (Component side)	Parts on the parts face side seen from the parts face are indicated.

VS-99 (REC/PB HEAD AMP, VIDEO, SERVO/SYSTEM CONTROL) P

— Ref. No. VS-99 BOARD: 3,000 series —

VS-99 BOARD (COMPONENT SIDE)

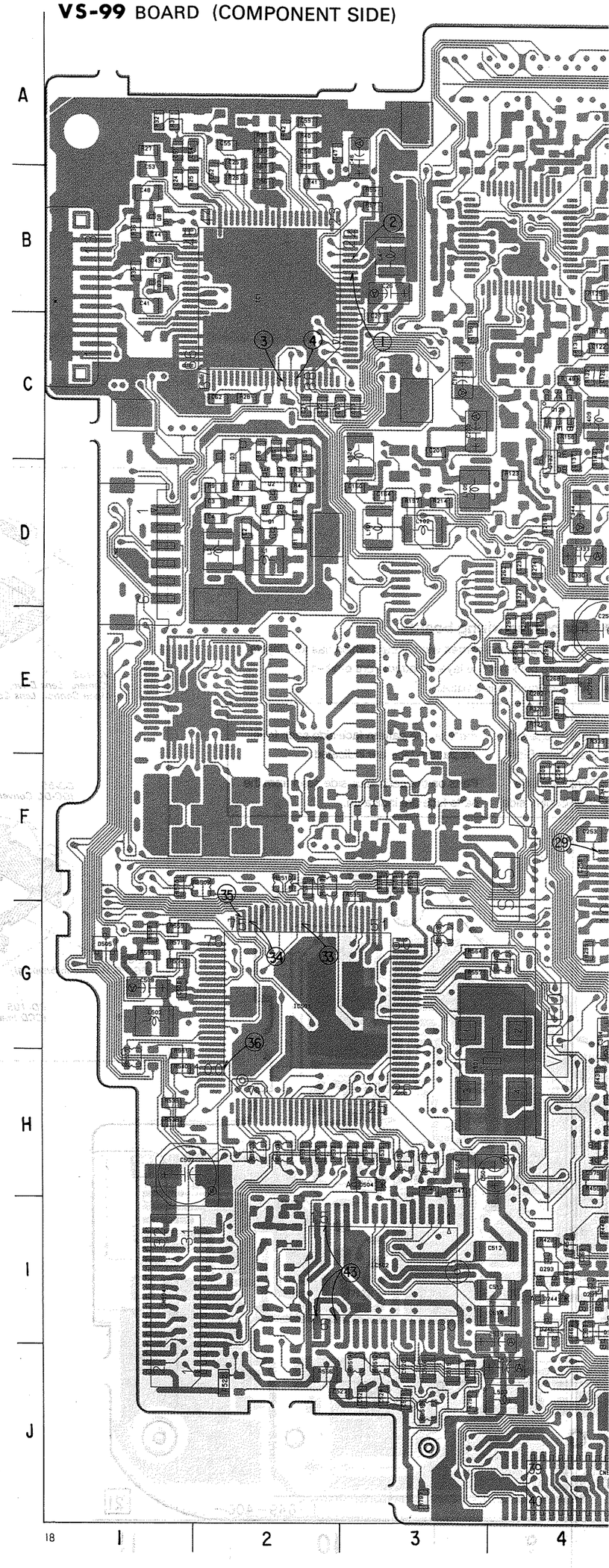

CONTROL) PRINTED WIRING BOARD

VS-99 BOARD (CONDUCTOR SIDE)

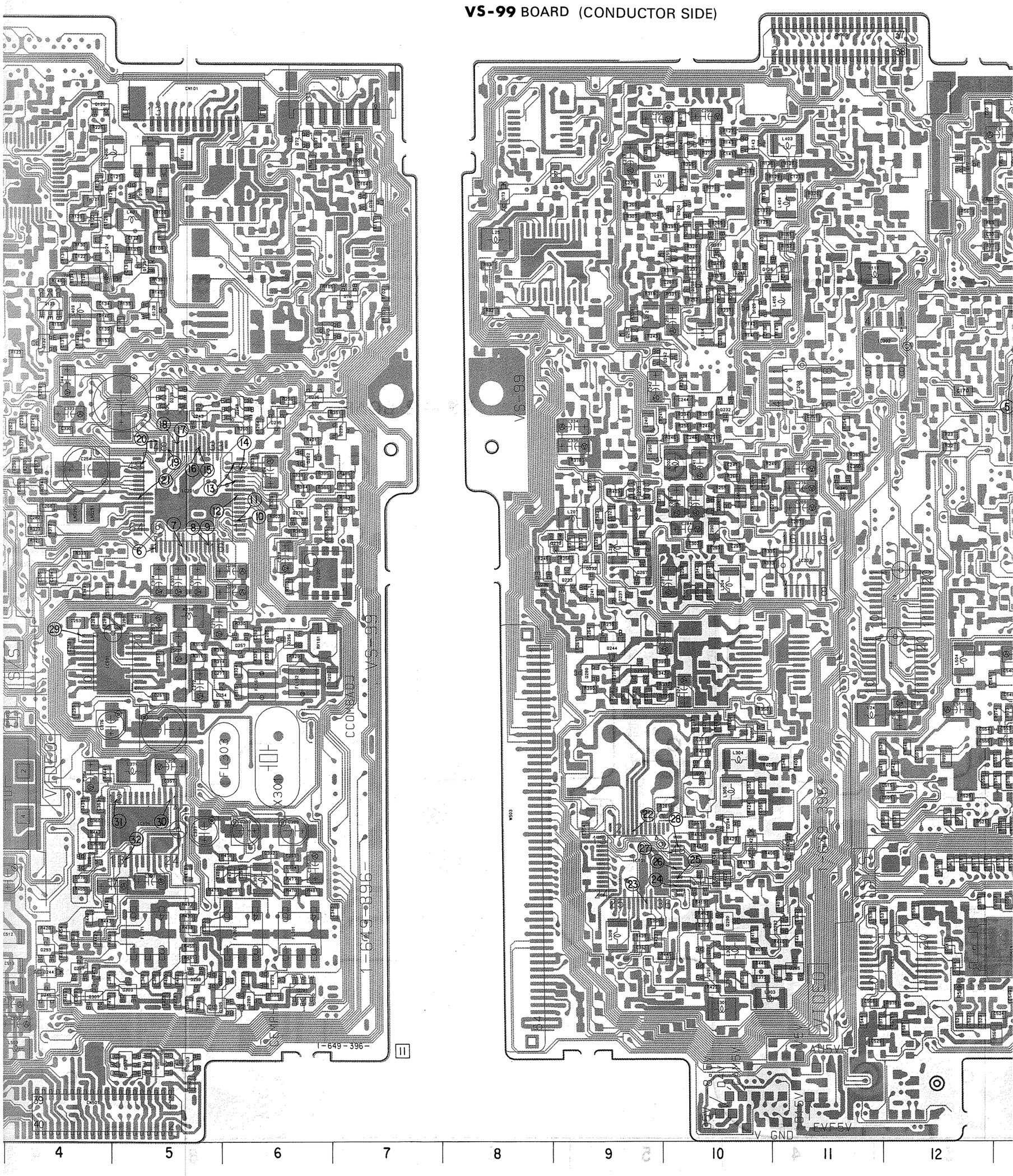

VS-99 BOARD (CONDUCTOR SIDE)

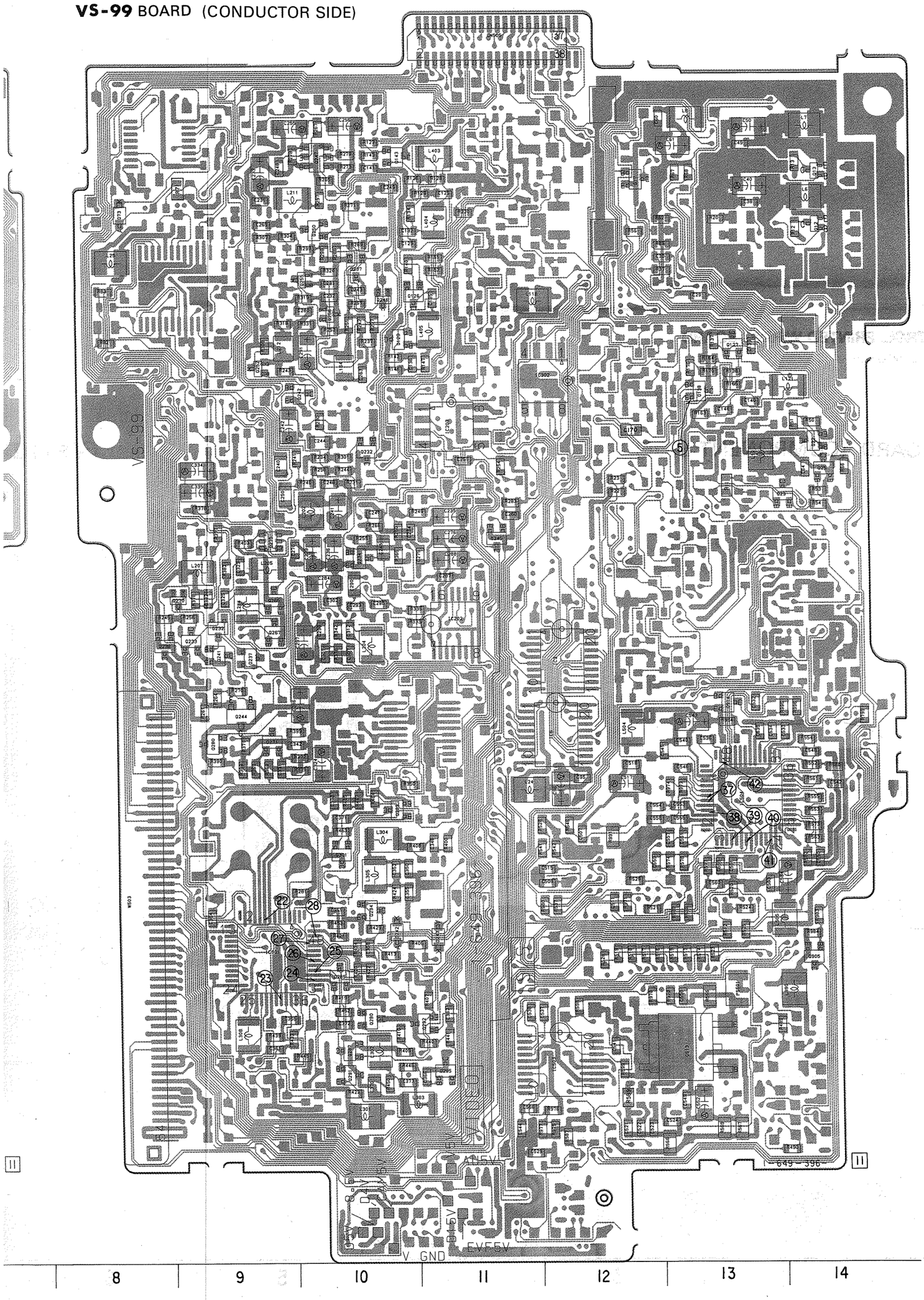

VS-99 (REC/PB HEAD AMP) SCHEMATIC DIAGRAM

— Ref. No. VS-99 BOARD: 3,000 series —

● Refer to page 74 for printed wiring board.

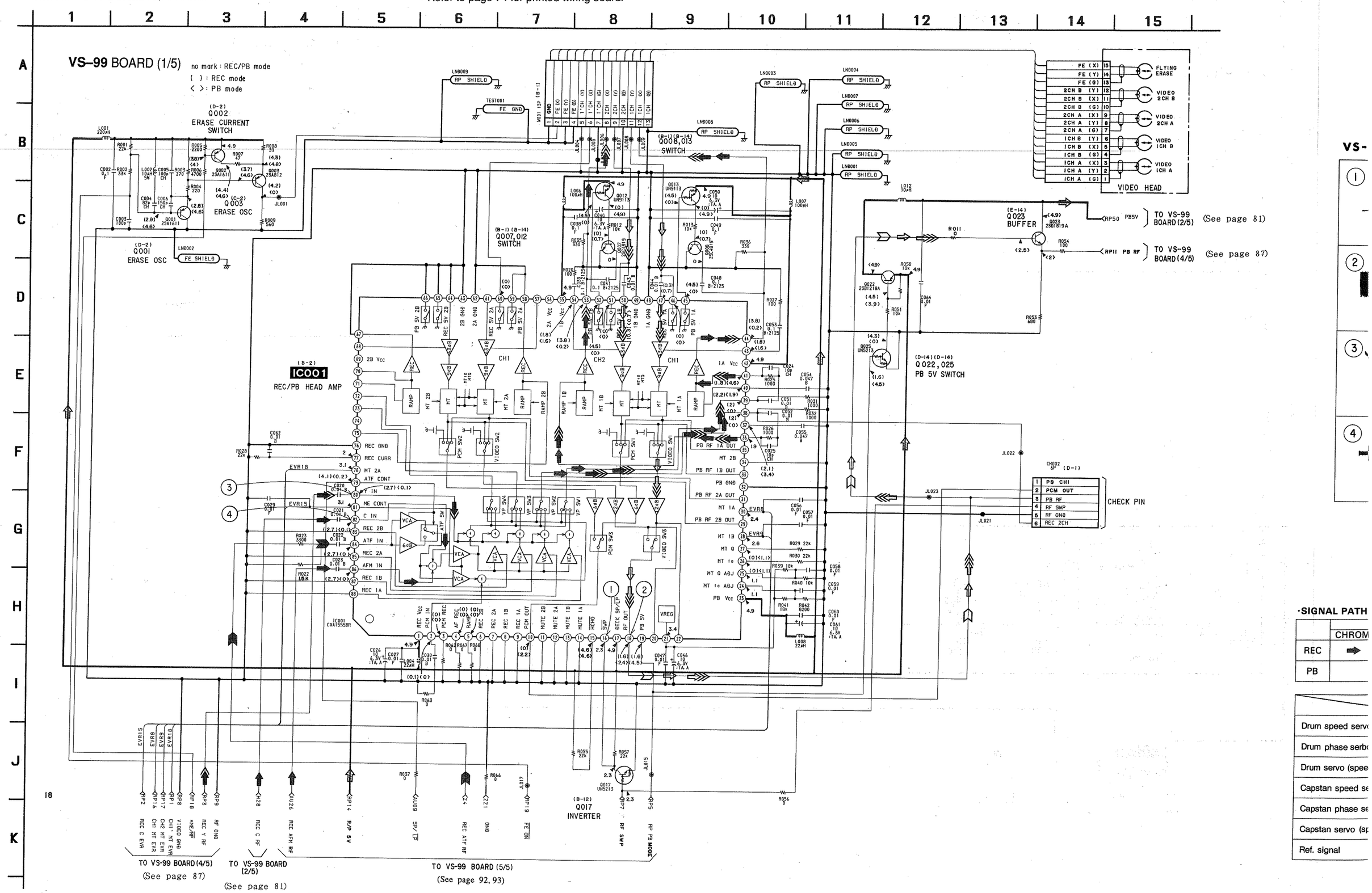

·SIGNAL PATH

	CHROM
REC	➡
PB	

Drum speed servo
Drum phase servo
Drum servo (speed
Capstan speed se
Capstan phase se
Capstan servo (sp
Ref. signal

r printed wiring board.

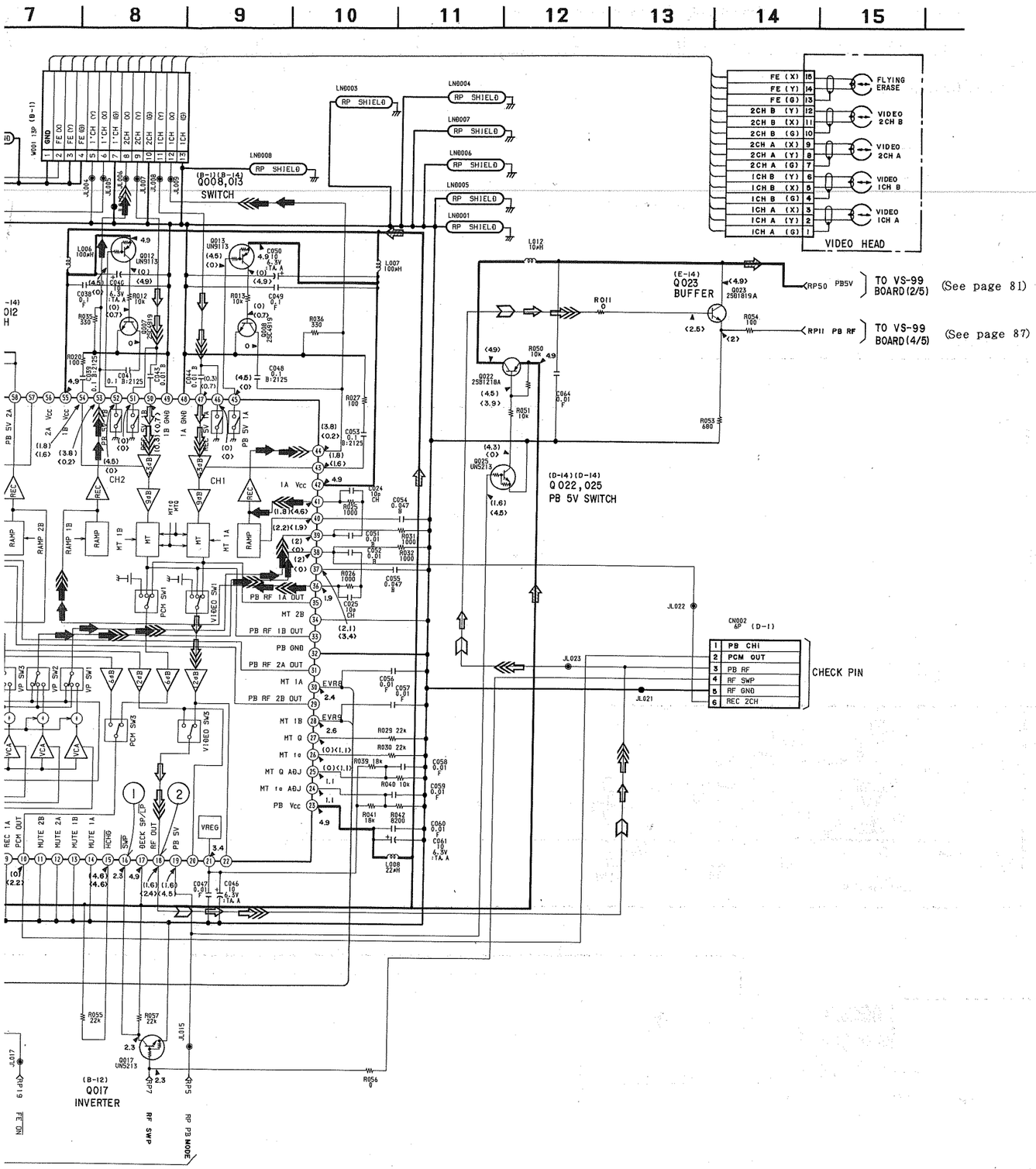

VS-99 BOARD (1/5)

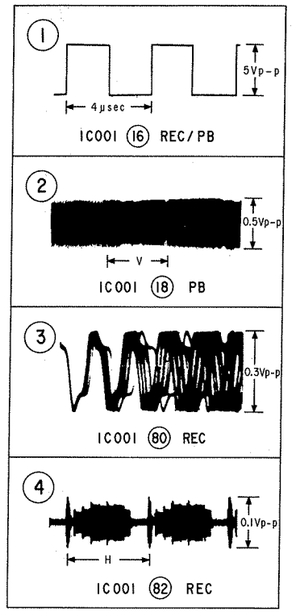

·SIGNAL PATH

	VIDEO Signal			AUDIO Signal
	CHROMA	Y	Y/CHROMA	
REC	➡	➡	➡	➡
PB			⇨	⇨

	REC	REC/PB	PB
Drum speed servo			
Drum phase serbo			
Drum servo (speed and phase)			
Capstan speed servo			
Capstan phase servo			
Capstan servo (speed and phase)			
Ref. signal	➡		⇨

VS-99 (VIDEO) SCHEMATIC DIAGRAM

— Ref. No. VS-99 BOARD: 3,000 series —

● Refer to page 74 for printed wiring board.

VS-99 BOARD (2/5)

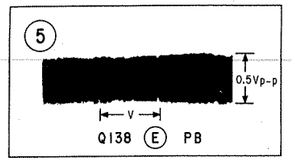

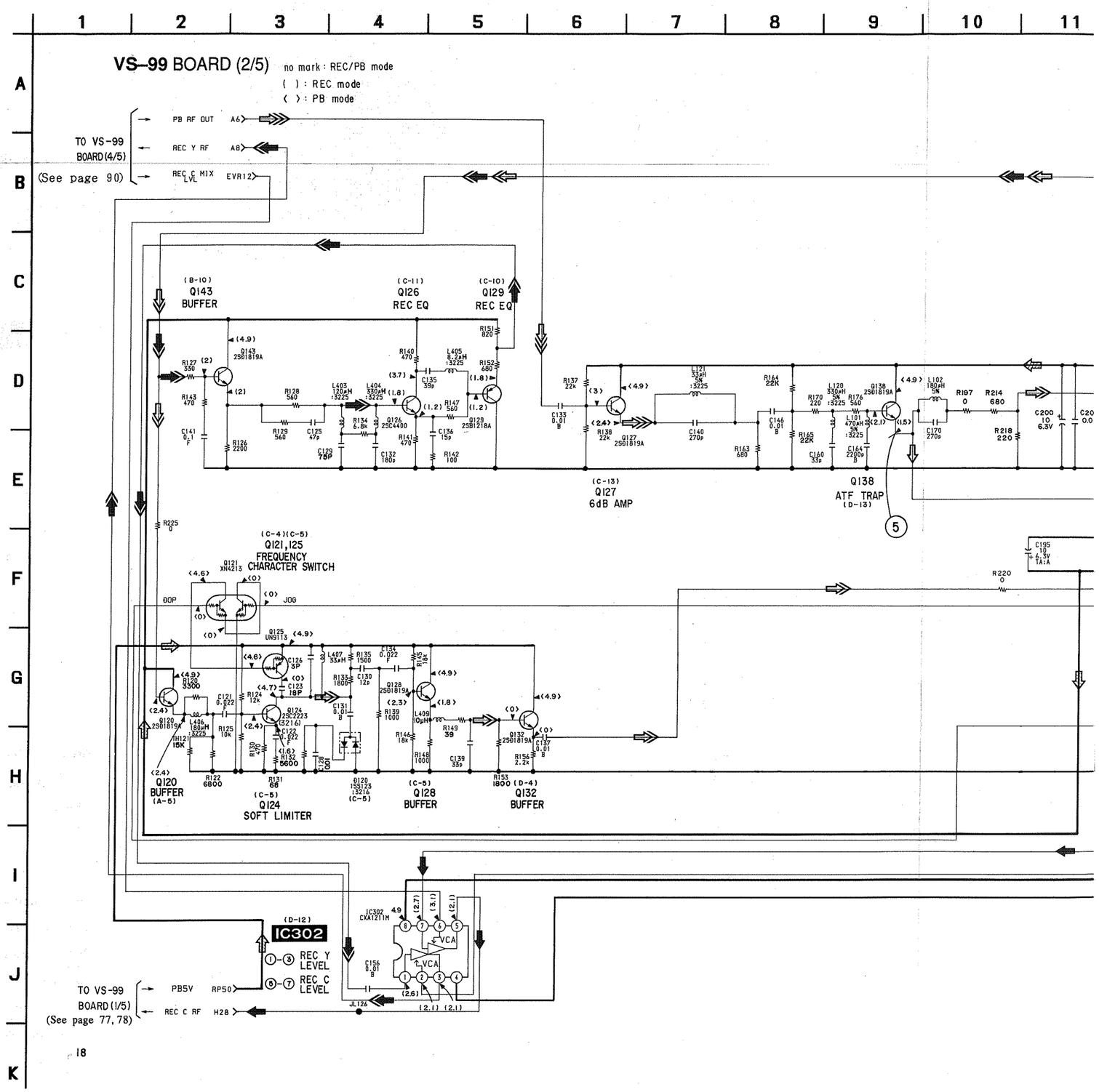

·SIGNAL PATH

	VIDEO Signal			AUDIO Signal
	CHROMA	Y	Y/CHROMA	
REC	➡	➡		
PB	⇨	⇨	⇨	

VS-99 (VIDEO) SCHEMATIC DIAGRAM

— Ref. No. VS-99 BOARD: 3,000 series —

● Refer to page 74 for printed wiring board.

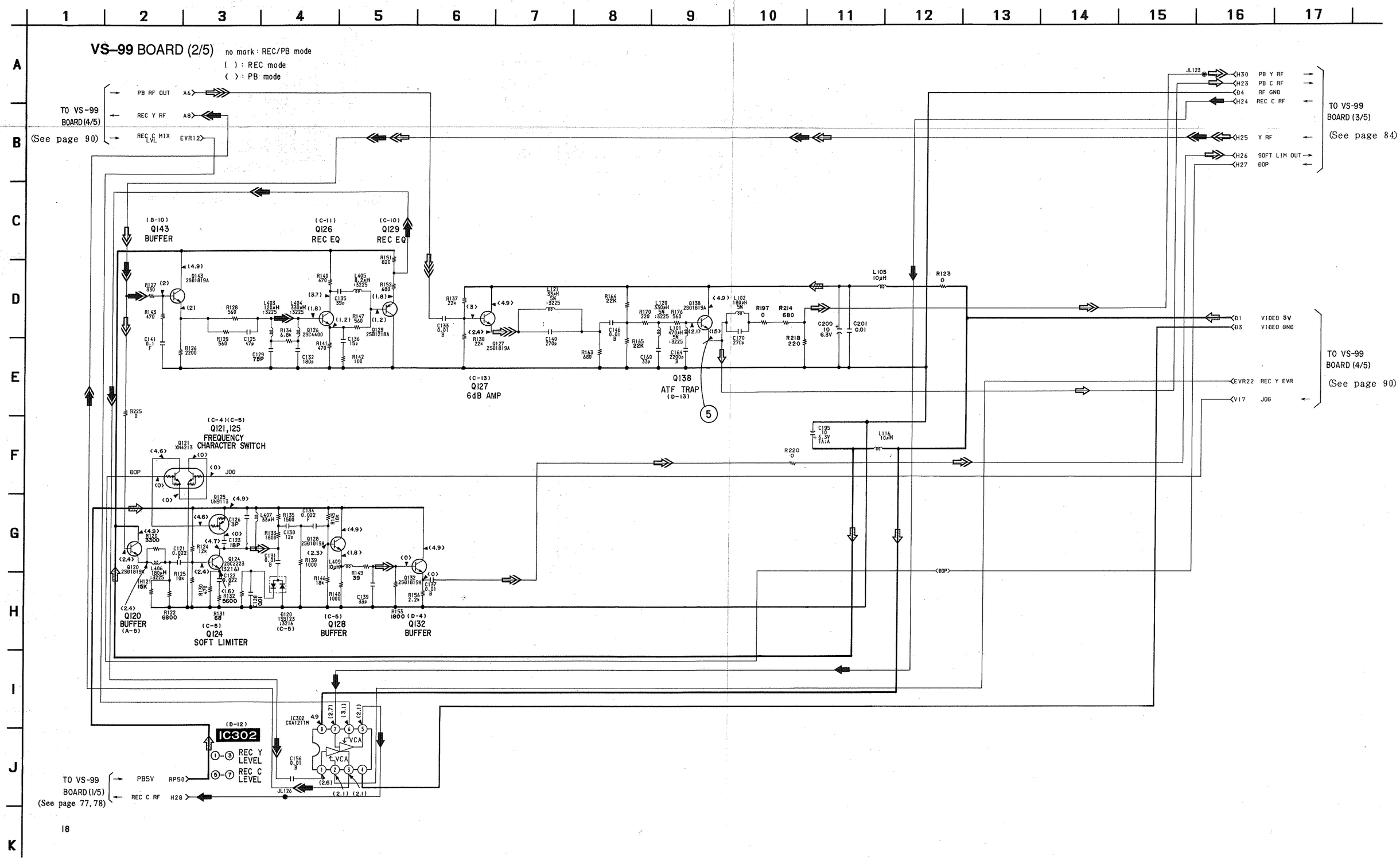

VS-99 (VIDEO) SCHEMATIC DIAGRAM

— Ref. No. VS-99 BOARD: 3,000 series —

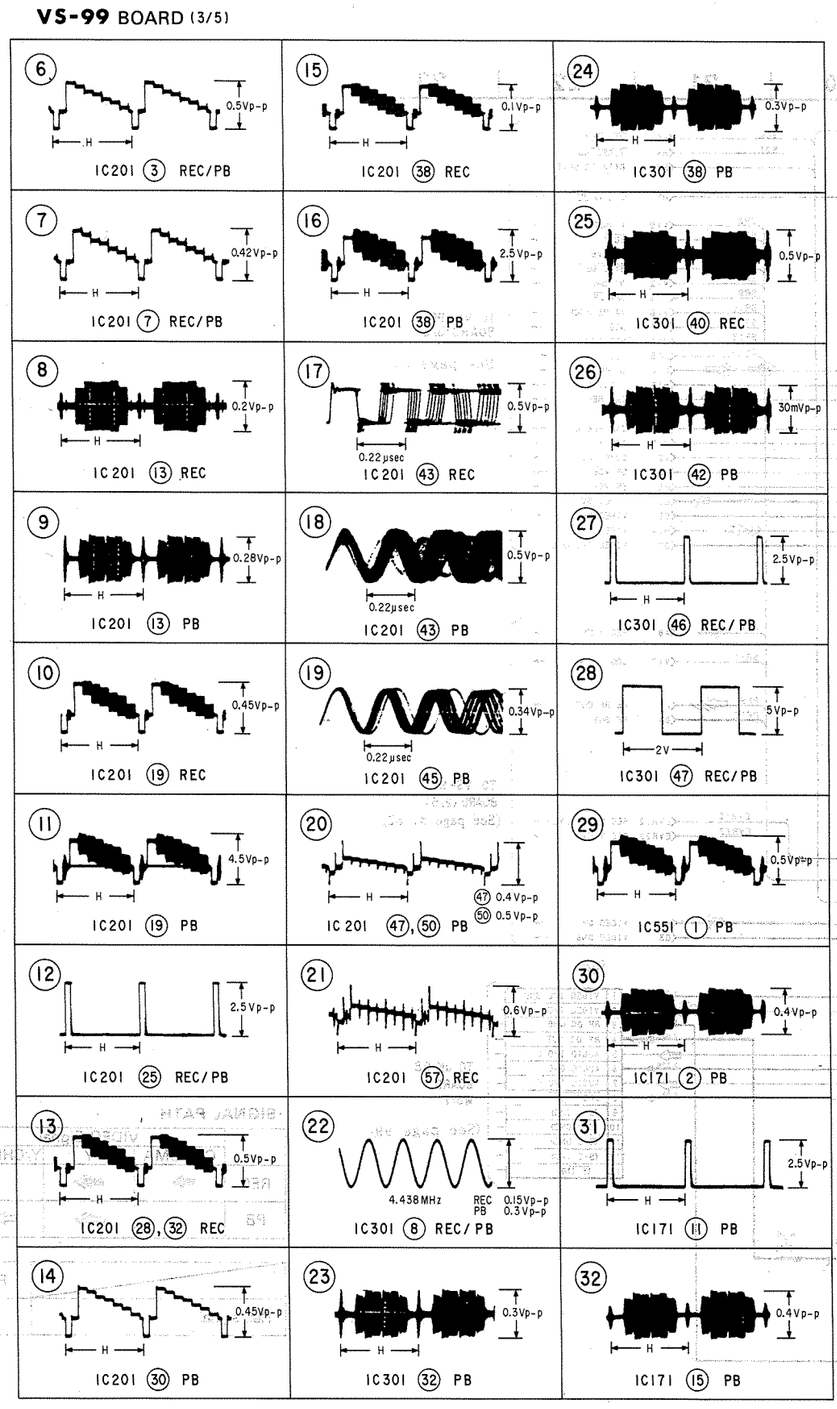

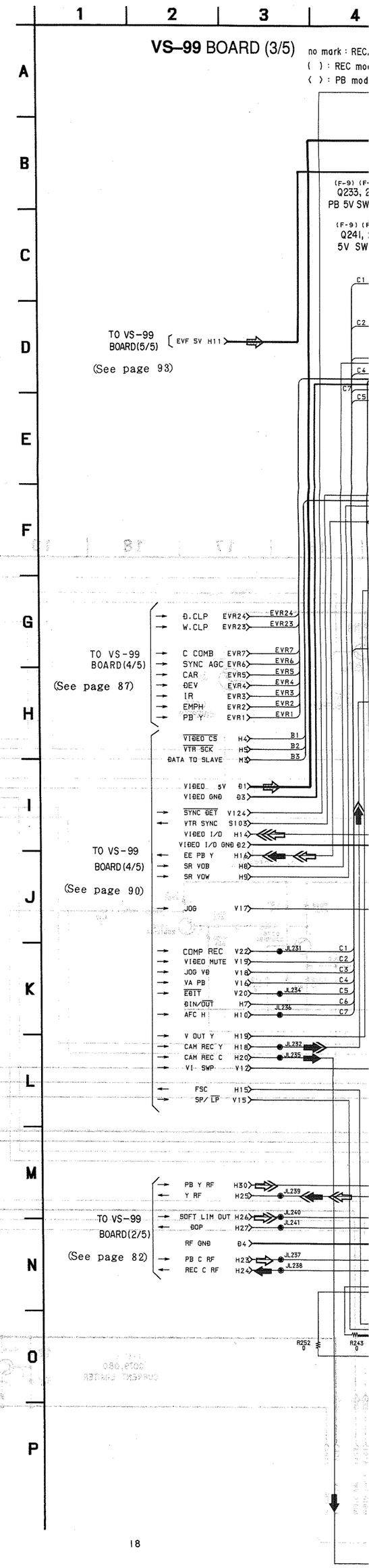

·SIGNAL PATH

	VIDEO Signal			AUDIO Signal
	CHROMA	Y	Y/CHROMA	
REC	➡	➡		
PB	⇨	⇨	⇨	

● Refer to page 74 for printed wiring board.

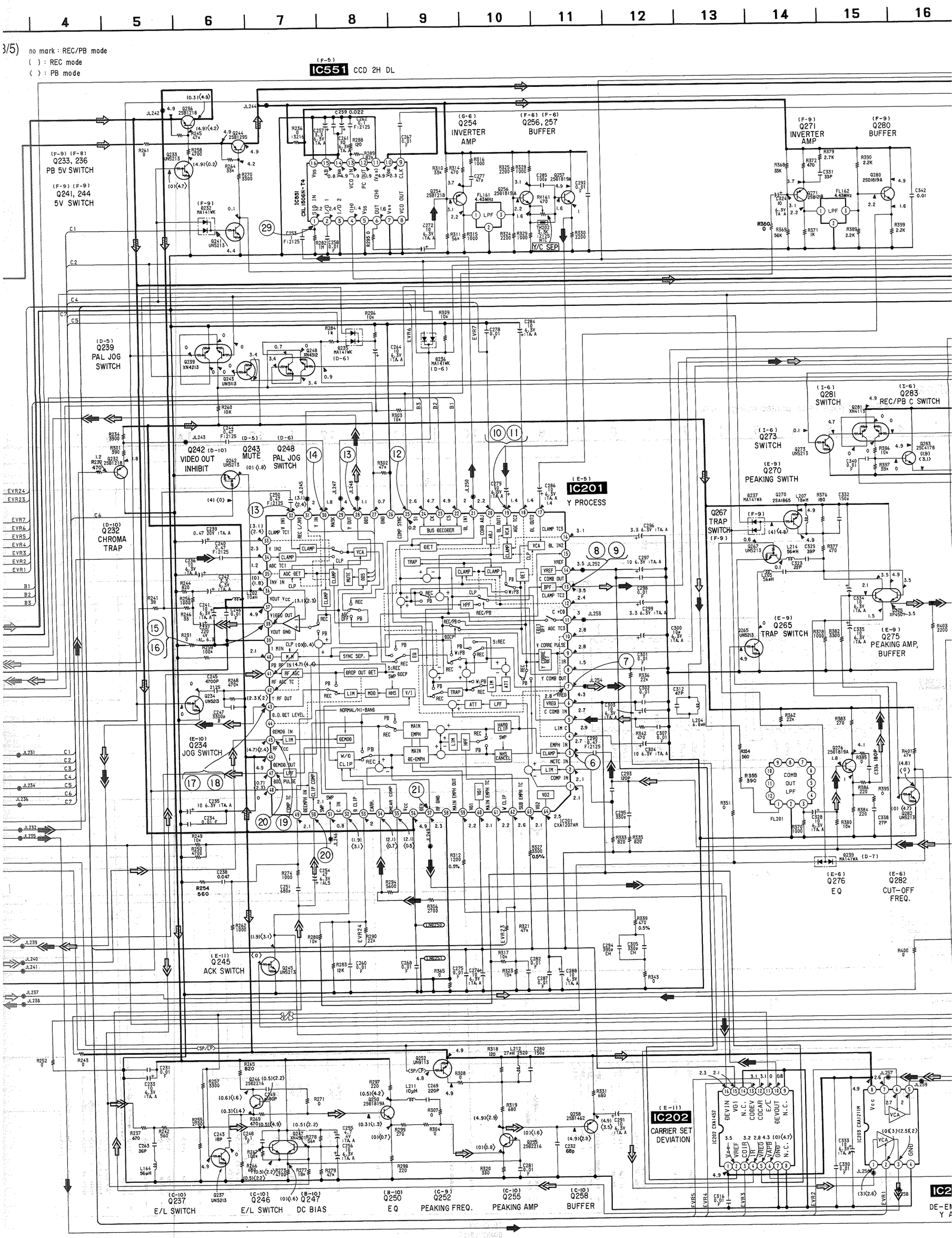

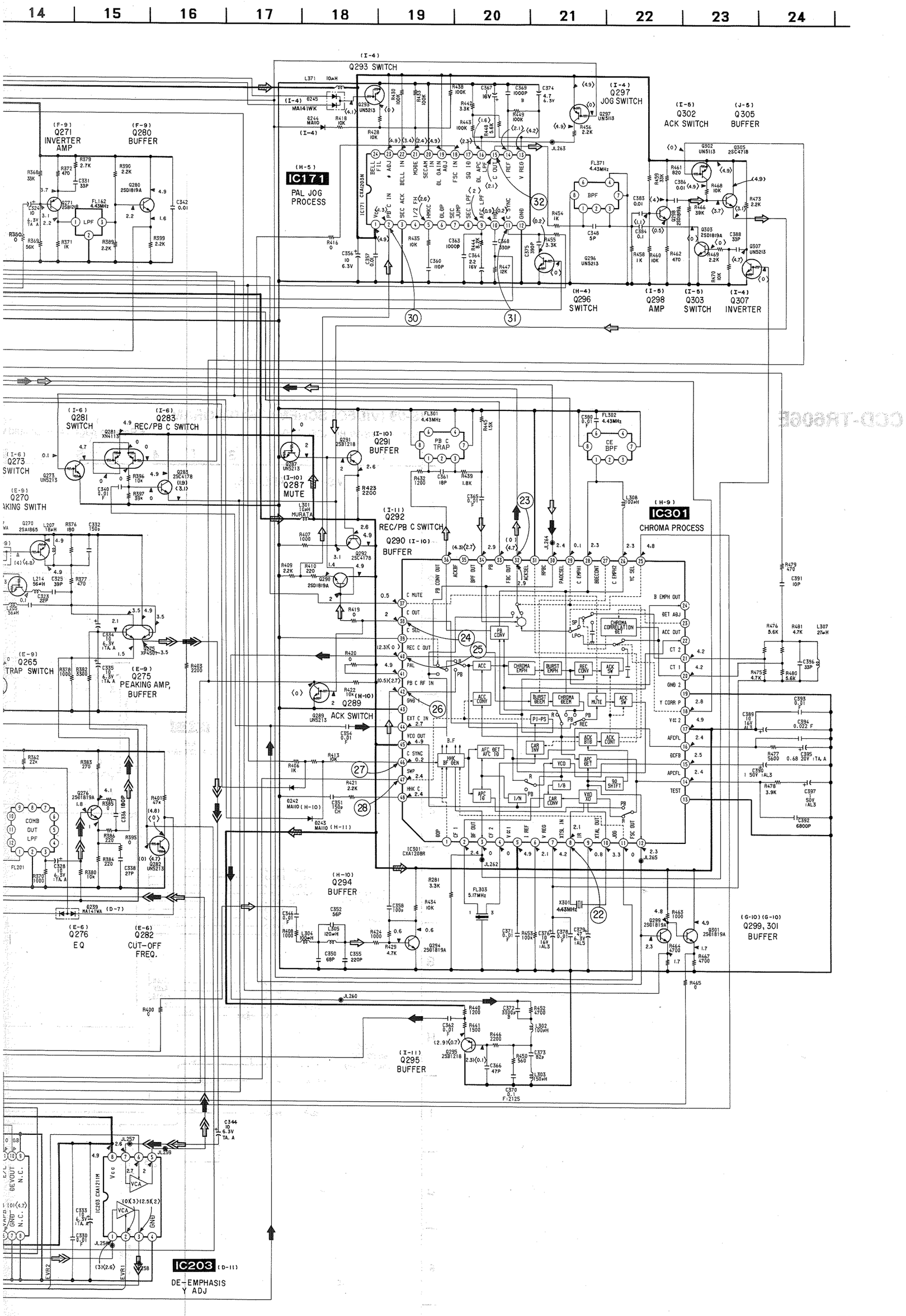
14
15
16
17
18
19
20
21
22
23
24
Q293 SWITCH
Q297 JOG SWITCH
Q302 ACK SWITCH
Q305 BUFFER
Q271 INVERTER AMP
Q280 BUFFER
IC171
PAL JOG PROCESS
Q296 SWITCH
Q298 AMP
Q303 SWITCH
Q307 INVERTER
Q281 SWITCH
Q283 REC/PB C SWITCH
Q273 SWITCH
Q270 AKING SWITH
Q287 MUTE
Q291 BUFFER
Q292 REC/PB C SWITCH
Q290 BUFFER
IC301
CHROMA PROCESS
Q265 TRAP SWITCH
Q275 PEAKING AMP, BUFFER
Q289 ACK SWITCH
Q276 EQ
Q282 CUT-OFF FREQ.
Q294 BUFFER
Q299, 301 BUFFER
Q295 BUFFER
IC203
DE-EMPHASIS Y ADJ

VS-99 (VIDEO) SCHEMATIC DIAGRAM

— Ref. No. VS-99 BOARD: 3,000 series —

● Refer to page 74 for printed wiring board.

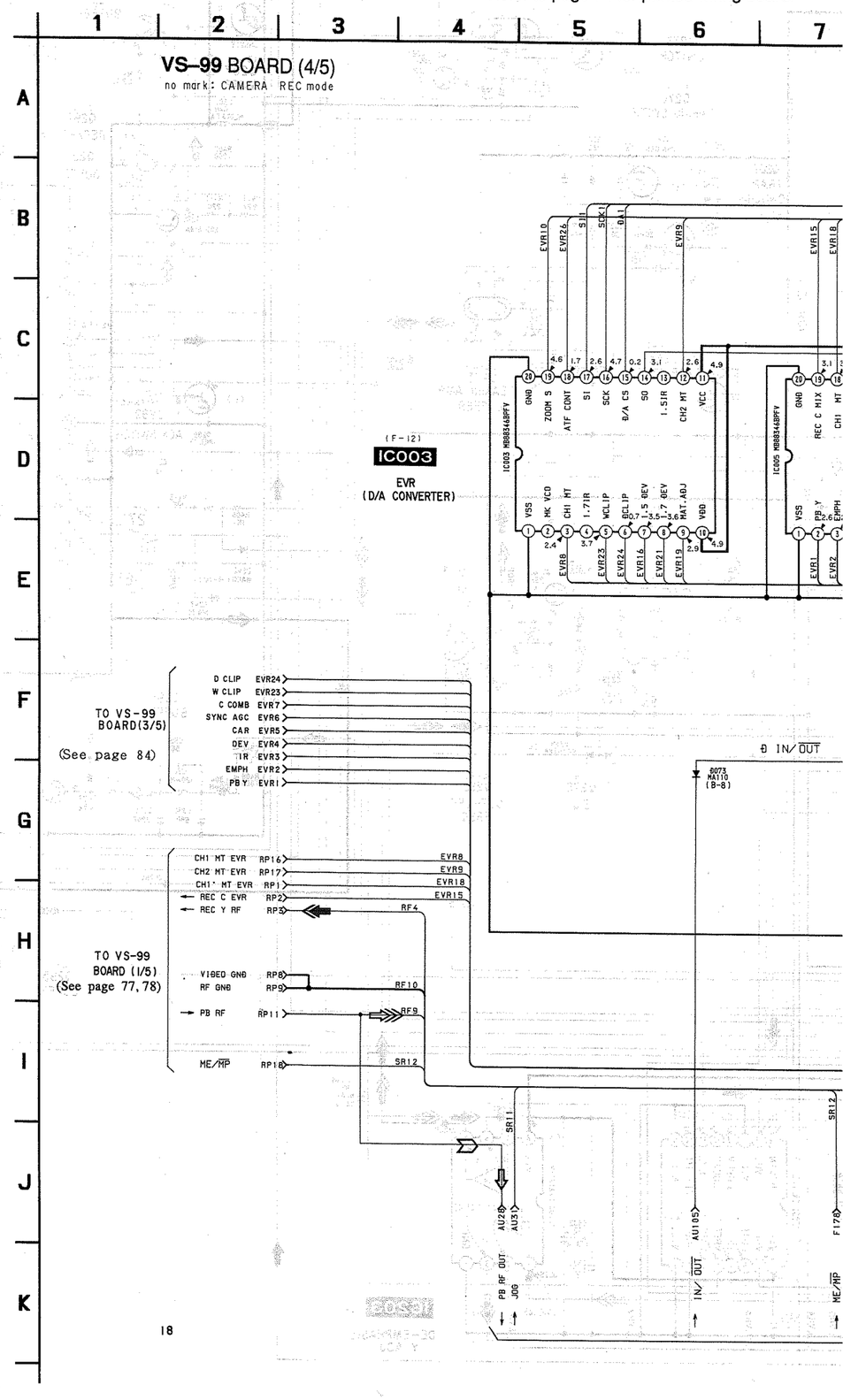

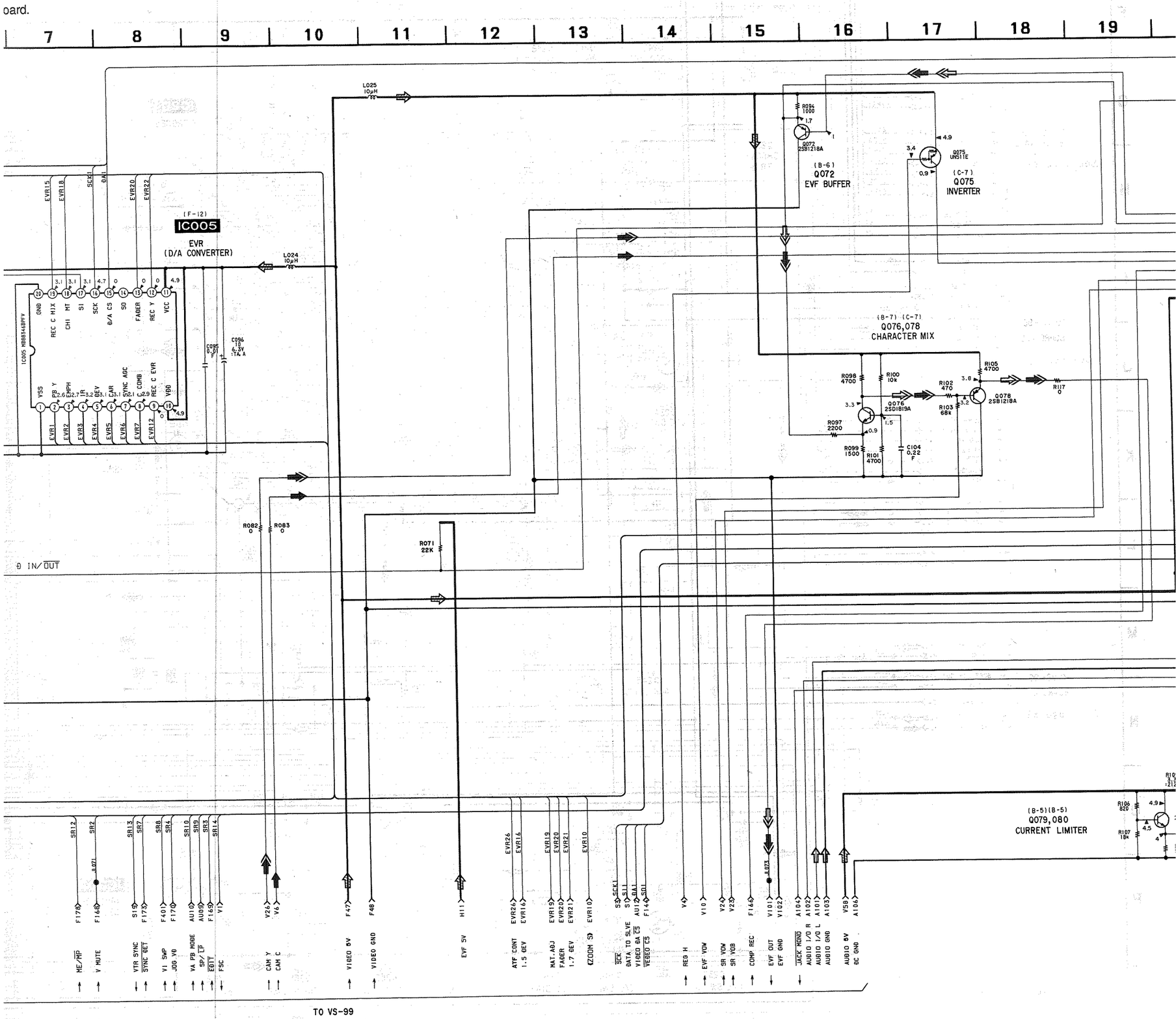
7
8
9
10
11
12
13
14
15
16
17
18
19
(F-12)
IC005
EVR
(D/A CONVERTER)
IC005 HB88346PFV
L025 10μH
L024 10μH
R094 1000
Q072 2SB1218A
(B-6)
Q072
EVF BUFFER
Q075 UN511E
(C-7)
Q075
INVERTER
(B-7) (C-7)
Q076,078
CHARACTER MIX
R098 4700
R100 10k
Q076 2SD1819A
R097 2200
R099 1500
R101 4700
C104 0.22 F
R102 470
R103 68k
R105 4700
Q078 2SB1218A
R117 0
R082 0
R083 0
R071 22K
IN/OUT
(B-5)(B-5)
Q079,080
CURRENT LIMITER
ME/MP
V MUTE
VTR SYNC
SYNC DET
V1 SWP
JOG V0
VA PB MODE
SP/LP
EDIT
FSC
CAM Y
CAM C
VIDEO 6V
VIDEO GND
EVF 5V
ATF CONT
1.5 GEV
MAT.ADJ
FADER
1.7 GEV
ZOOM S3
DATA TO SLVE
VIDEO Ba CS
VIDEO C5
RED H
EVF VOW
SR VOW
SR VOB
COMP REC
EVF OUT
EVF GND
JACK MONO
AUDIO I/O R
AUDIO I/O L
AUDIO GND
AUDIO 6V
DC GND
TO VS-99
BOARD (5/5)
(See page 94)

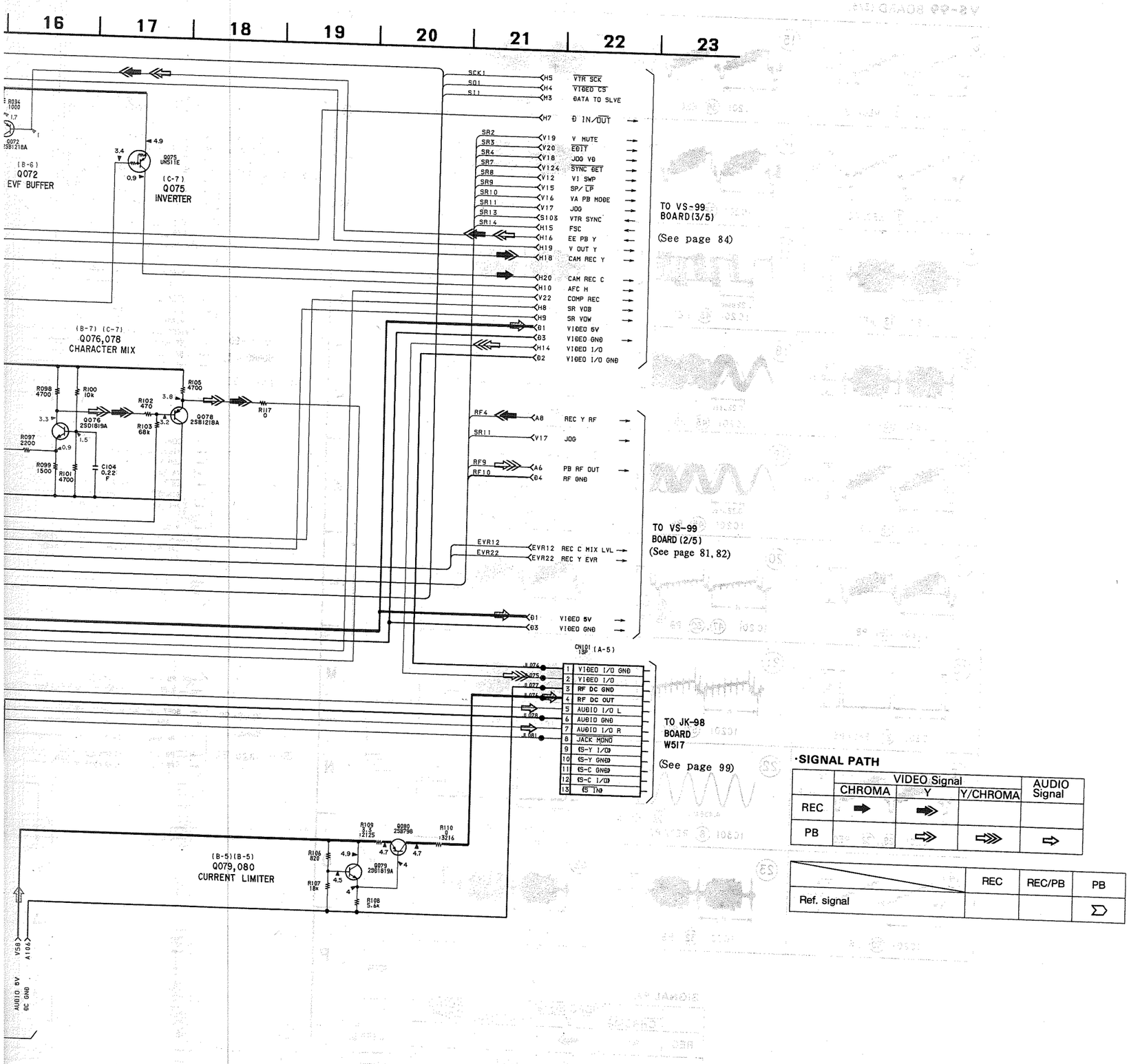

·SIGNAL PATH

	VIDEO Signal			AUDIO Signal
	CHROMA	Y	Y/CHROMA	
REC	➡	➡		
PB		⇨	⇨	⇨

	REC	REC/PB	PB
Ref. signal			▷

VS-99 (SERVO/SYSTEM CONTROL) SCHEMATIC DIAGRAM

— Ref. No. VS-99 BOARD: 3,000 series —

● Refer to page 74 for printed wiring board.

VS-99 BOARD (5/5)

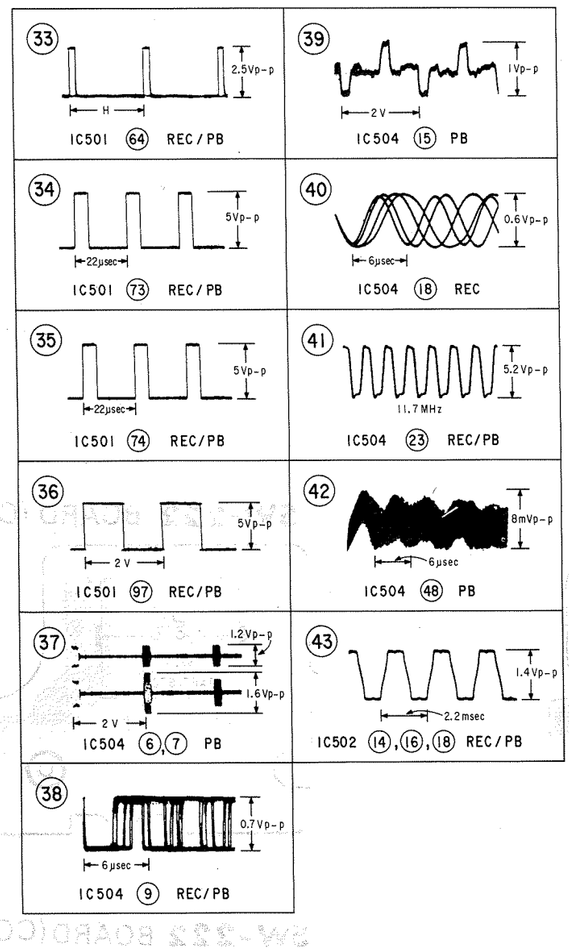

Note: The components identified by mark ⚠ or dotted line with mark ⚠ are critical for safety. Replace only with part number specified.

·SIGNAL PATH

	VIDEO Signal			AUDIO Signal
	CHROMA	Y	Y/CHROMA	
REC	➡	➡		➡
PB		⇨		⇨

	REC	REC/PB	PB
Drum speed servo		▷	
Drum phase serbo		▷	
Drum servo (speed and phase)		▷	
Capstan speed servo			
Capstan phase servo			▷
Capstan servo (speed and phase)		▷	
Ref. signal	▶	▷	▷

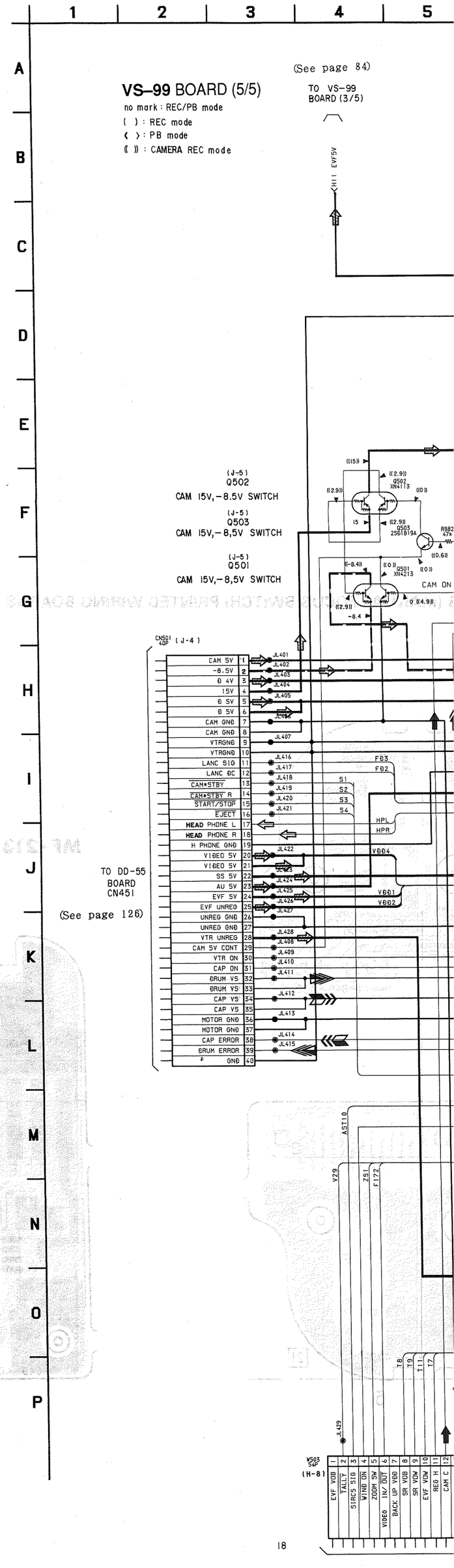

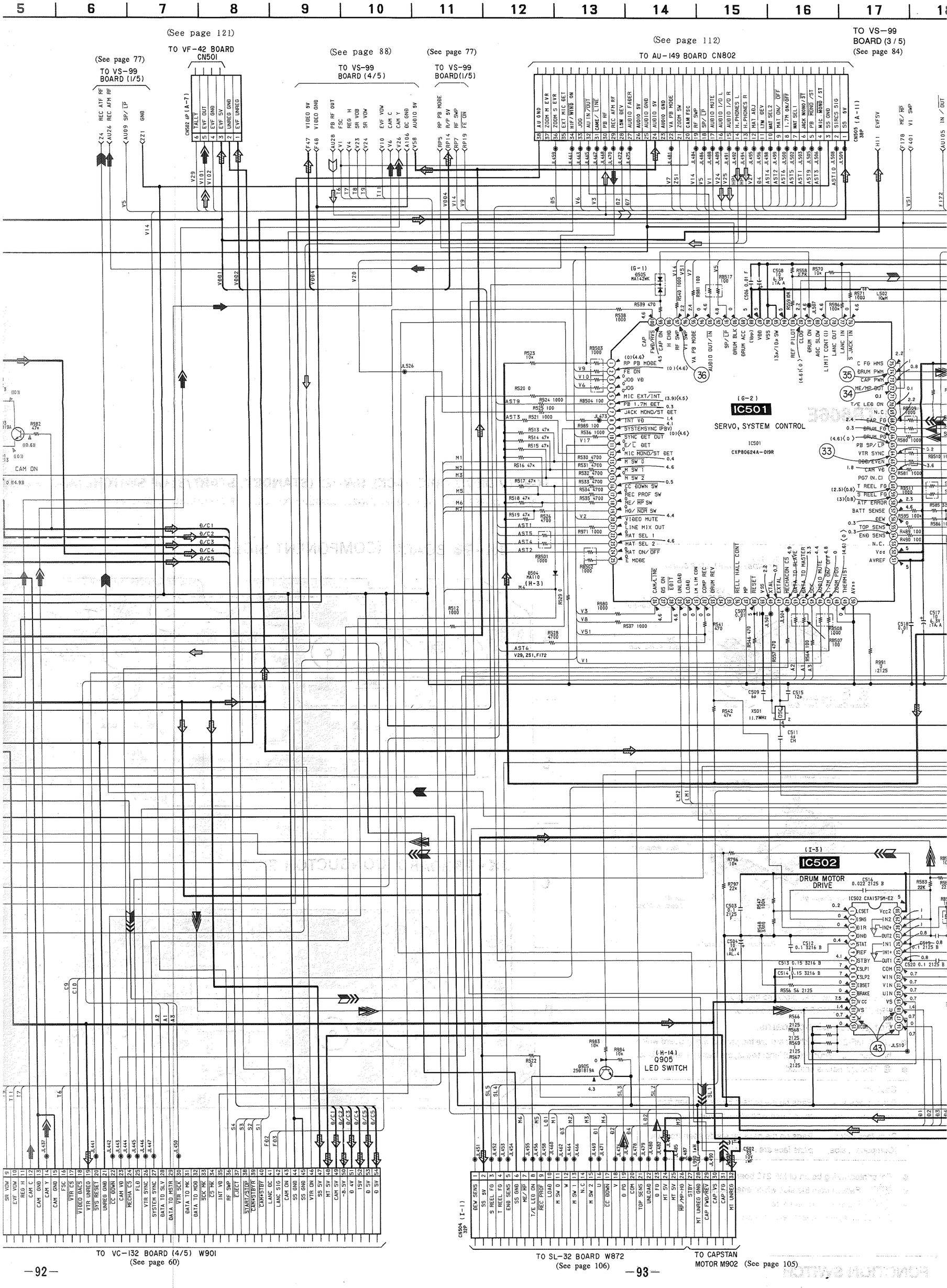
(See page 121)
TO VF-42 BOARD CN501
(See page 77)
TO VS-99 BOARD (1/5)
(See page 88)
TO VS-99 BOARD (4/5)
(See page 77)
TO VS-99 BOARD(1/5)
(See page 112)
TO AU-149 BOARD CN802
TO VS-99 BOARD (3/5)
(See page 84)
IC501
SERVO, SYSTEM CONTROL
IC501
CXP80624A-019R
IC502
DRUM MOTOR DRIVE
IC502 CXA1575M-E2
Q905
LED SWITCH
TO VC-132 BOARD (4/5) W901
(See page 60)
TO SL-32 BOARD W872
(See page 106)
TO CAPSTAN MOTOR M902 (See page 105)

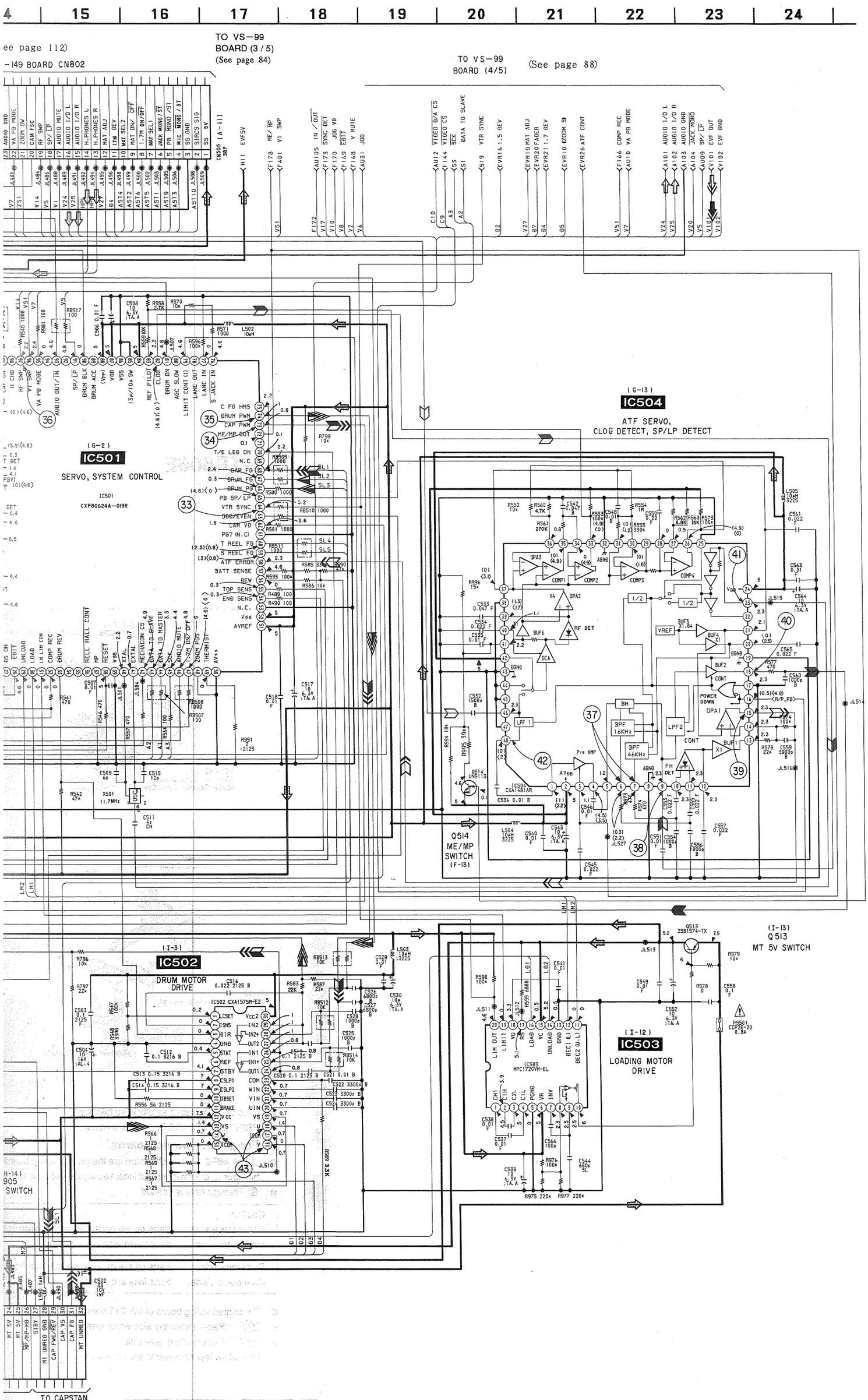
TO VS-99 BOARD (3/5) (See page 84)
TO VS-99 BOARD (4/5) (See page 88)
(See page 112)
-149 BOARD CN802
(G-2)
IC501
SERVO, SYSTEM CONTROL
IC501
CXP80624A-019R
(G-13)
IC504
ATF SERVO, CLOG DETECT, SP/LP DETECT
IC504
CXA1481AR
Q514
ME/MP SWITCH
(F-13)
(I-3)
IC502
DRUM MOTOR DRIVE
IC502
CXA1575M-E2
(I-13)
Q513
MT 5V SWITCH
(I-12)
IC503
LOADING MOTOR DRIVE
IC503
MPC1720VH-EL
TO CAPSTAN MOTOR M902 (See page 105)

JK-98 (VIDEO/AUDIO JACK), SW-222 (STANDBY, START/STOP SWITCH), MF-213 (MANUAL FOCUS SWITCH) PRINTED WIRING BOARDS

— Ref. No. JK-98 BOARD: 4,000 series, SW-222 BOARD: 5,000 series, MF-213 BOARD: 6,000 series —

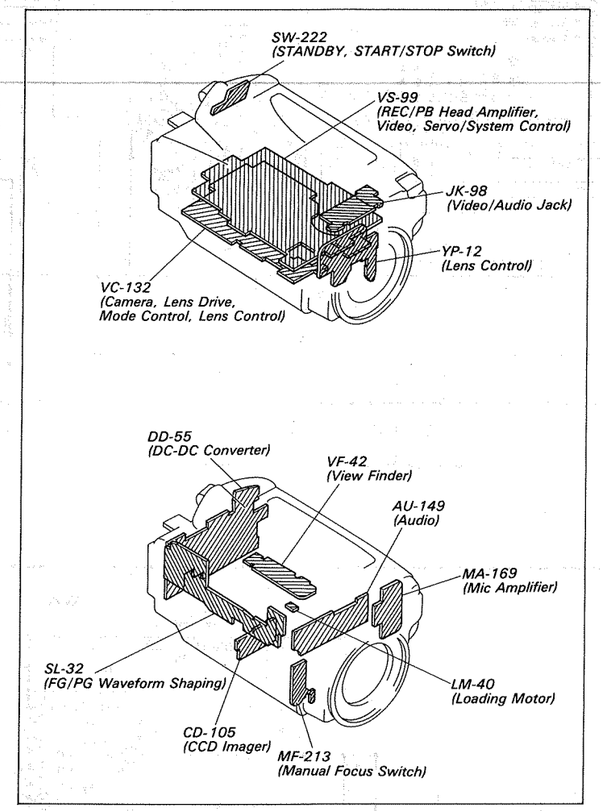

- CF block is replaced as block, so that there PRINTED WIRING BOARD are omitted.
- **For printed wiring boards.**
- JK-98, MF-213, SW-222 board are the printed wiring board which has four layers structure but inner two layers' patterns are omitted.
- ●: Through hole is omitted.

Caution:	
Pattern face side: (conductor Side)	Parts on the pattern face side seen from the pattern face are indicated.
Parts face side: (Component side)	Parts on the parts face side seen from the parts face are indicated.

- For printed wiring board of MF-213 board.
- ▒ : Pattern from the side which enables seeing.
- ▒ : Pattern of the rear side.
  (The other layer's patterns are not indicated.)

JK-98 BOARD (COMPONENT SIDE)

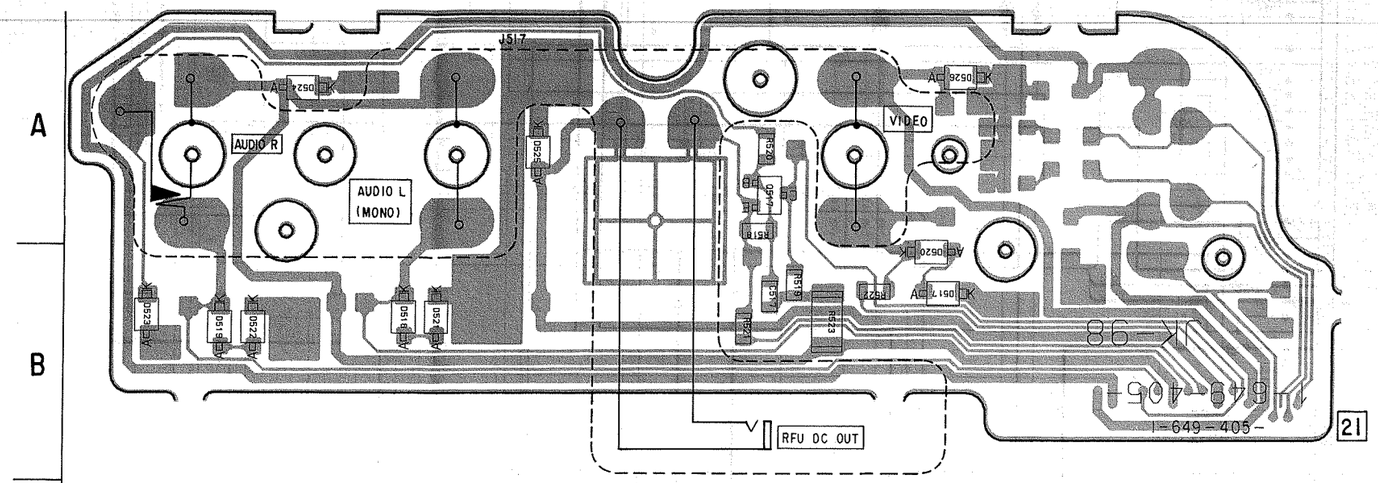

JK-98 BOARD (CONDUCTOR SIDE)

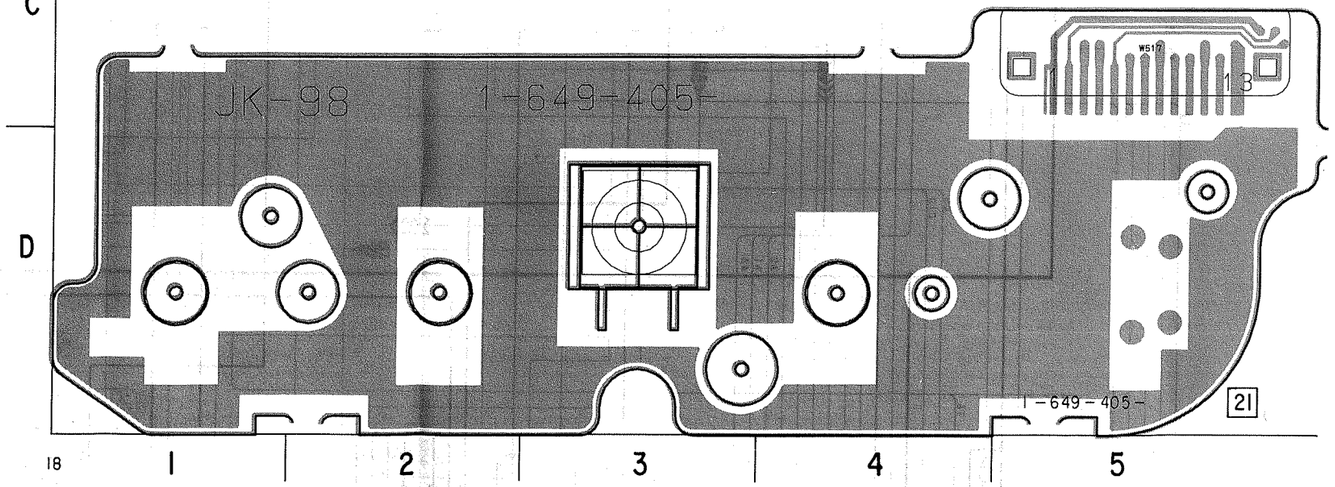

MF-213 BOAR

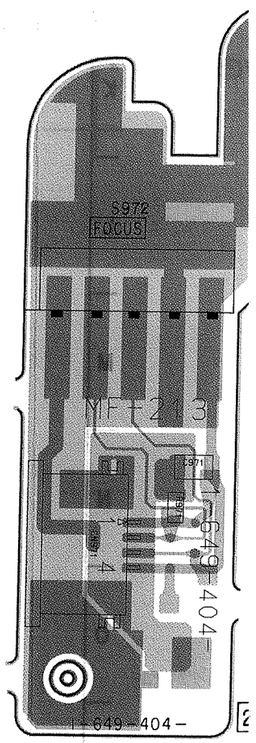

IDIO JACK), SW-222 (STANDBY, START/STOP SWITCH), MF-213 (MANUAL FOCUS SWITCH) PRINTED WIRING BOARDS

D: 4,000 series, SW-222 BOARD: 5,000 series, MF-213 BOARD: 6,000 series —

BOARD (COMPONENT SIDE)

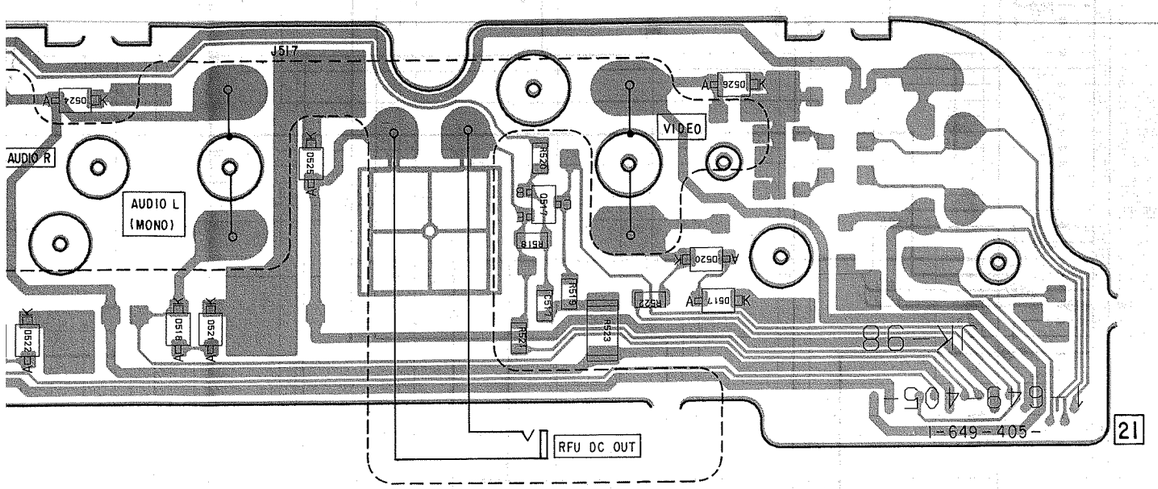

BOARD (CONDUCTOR SIDE)

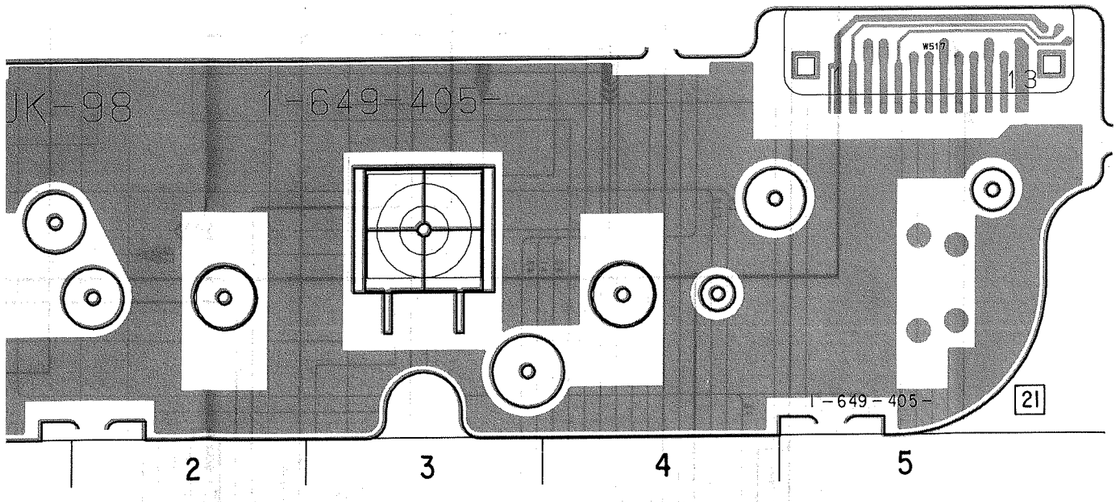

MF-213 BOARD

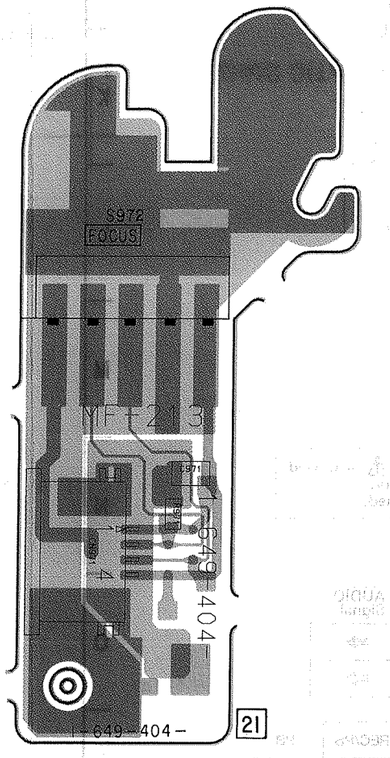

SW-222 BOARD (COMPONENT SIDE)

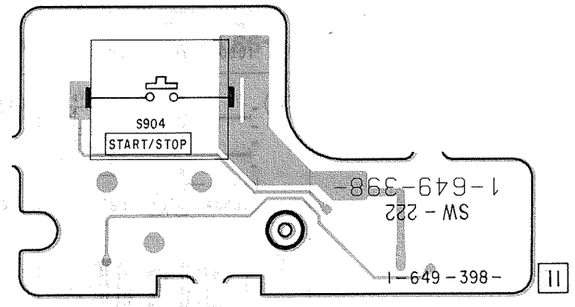

SW-222 BOARD (CONDUCTOR SIDE)

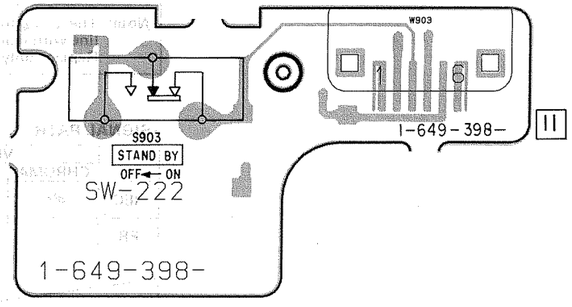

CF BLOCK (CAMERA FUNCTION SWITCH), JK-98 (VIDEO/AUDIO JACK), SW-222 (STANDBY, START/STOP SWITCH), MF-213 (MANUAL FOCUS SWITCH) SCHEMATIC DIAGRAMS

— Ref. No. CF BLOCK: 6,000 series, JK-98 BOARD: 4,000 series, SW-222 BOARD: 5,000 series, MF-213 BOARD: 6,000 series —

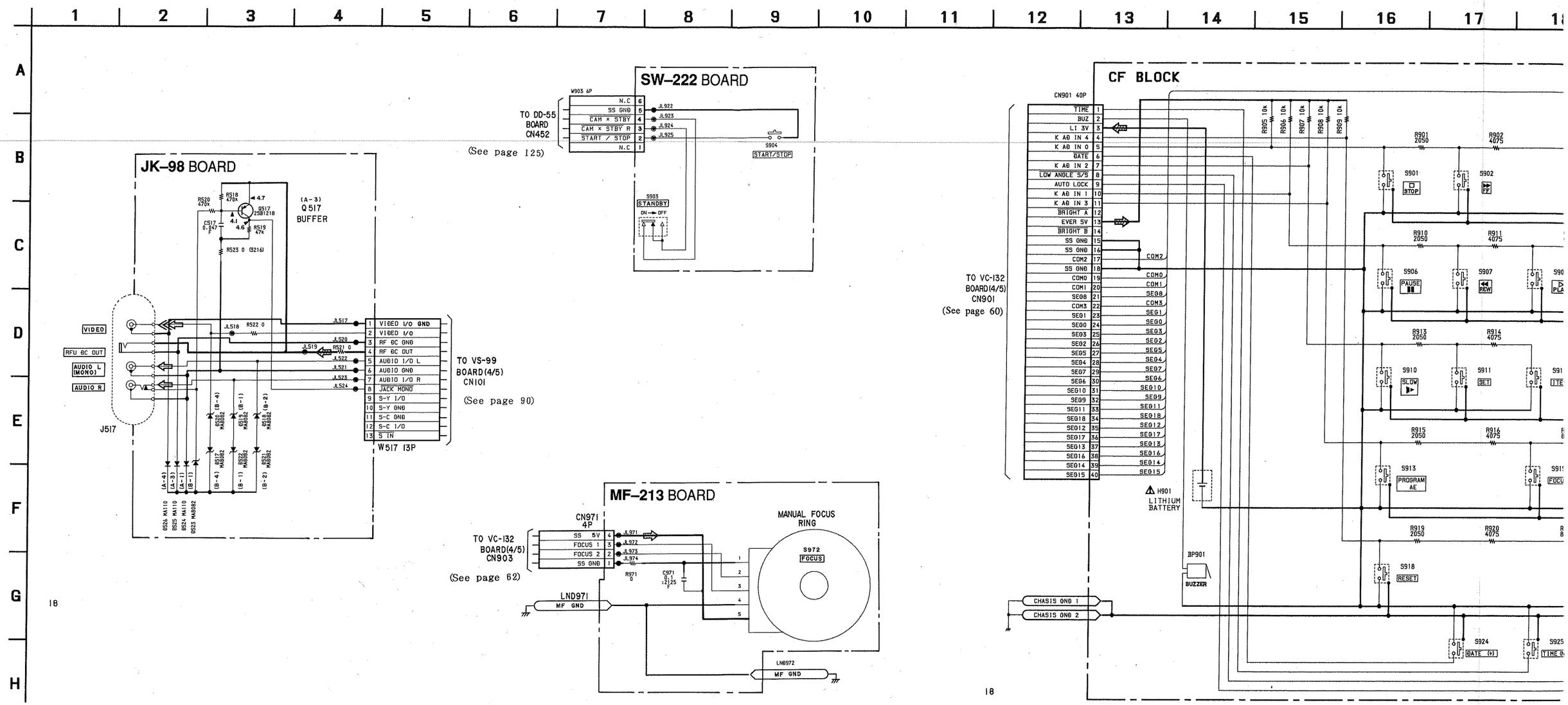

SW-222 (STANDBY, START/STOP SWITCH), MF-213 (MANUAL FOCUS SWITCH) SCHEMATIC DIAGRAMS

BOARD: 6,000 series —

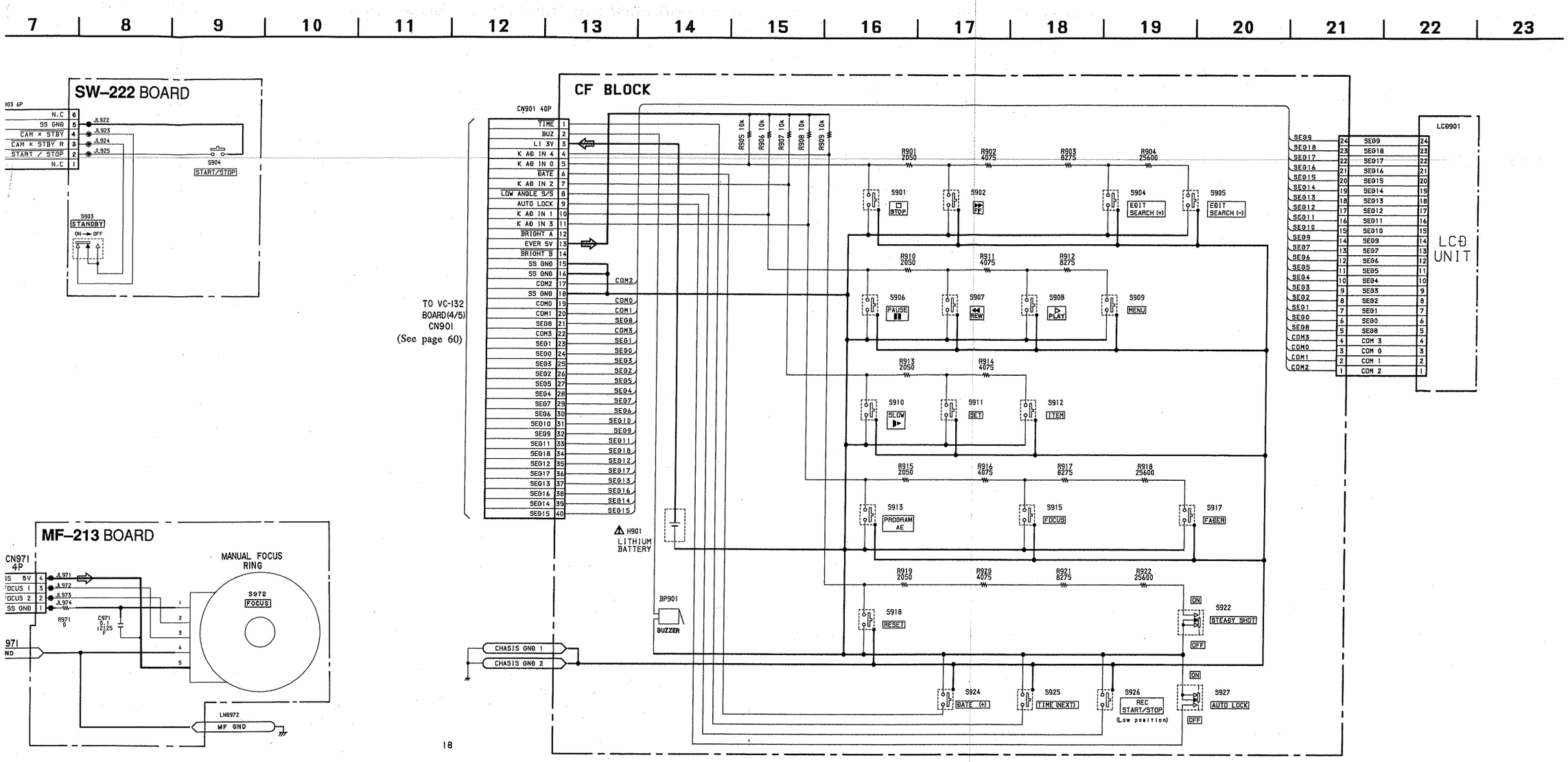

Note: The components identified by mark ⚠ or dotted line with mark ⚠ are critical for safety. Replace only with part number specified.

·SIGNAL PATH

	VIDEO Signal			AUDIO Signal
	CHROMA	Y	Y/CHROMA	
REC				
PB			⇨	⇨

SL-32 (FG/PG WAVEFORM SHAPING), FP-442 (MODE SWITCH), LM-40 (LOADING MOTOR), LS-33 (MECHA SENSOR) PRINTED WIRING BOARDS

— Ref. No. SL-32 BOARD: 4,000 series, LS-33 BOARD: 5,000 series —

LS-33 BOARD

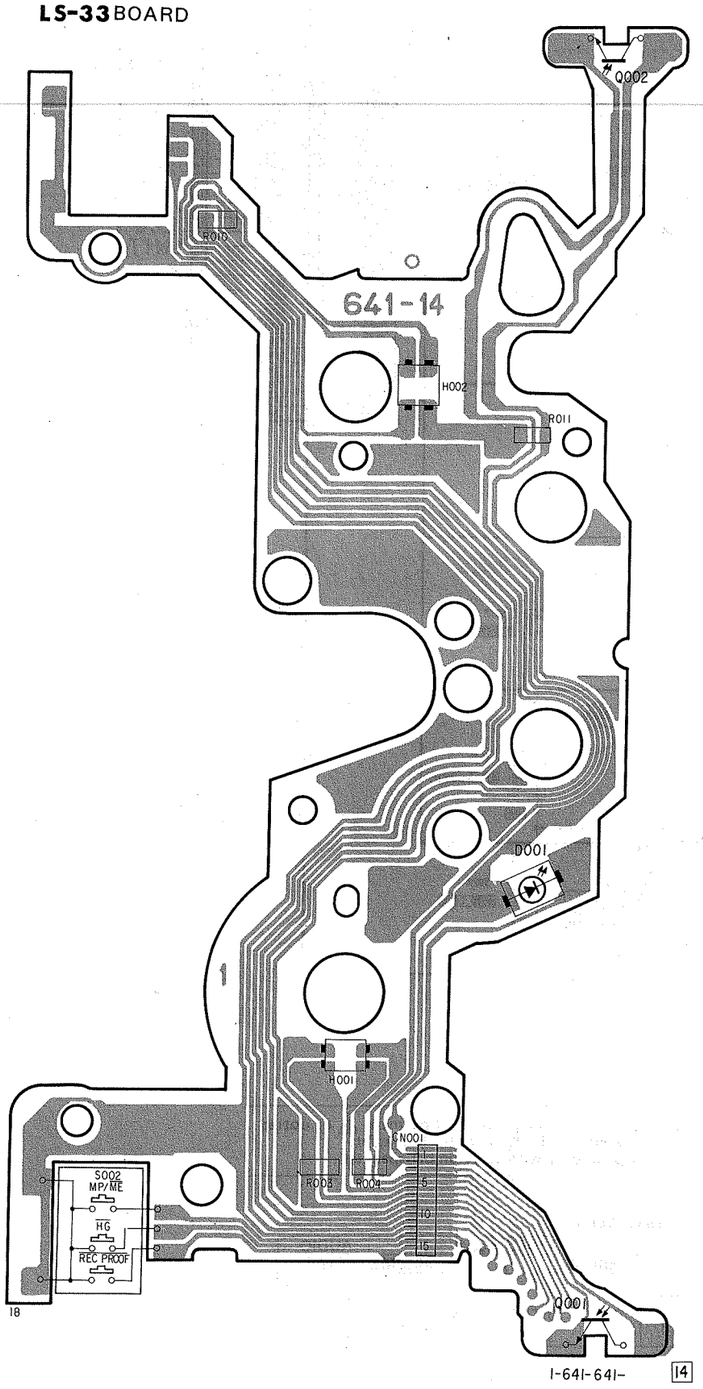

SL-32 BOARD (COMPONENT SIDE)

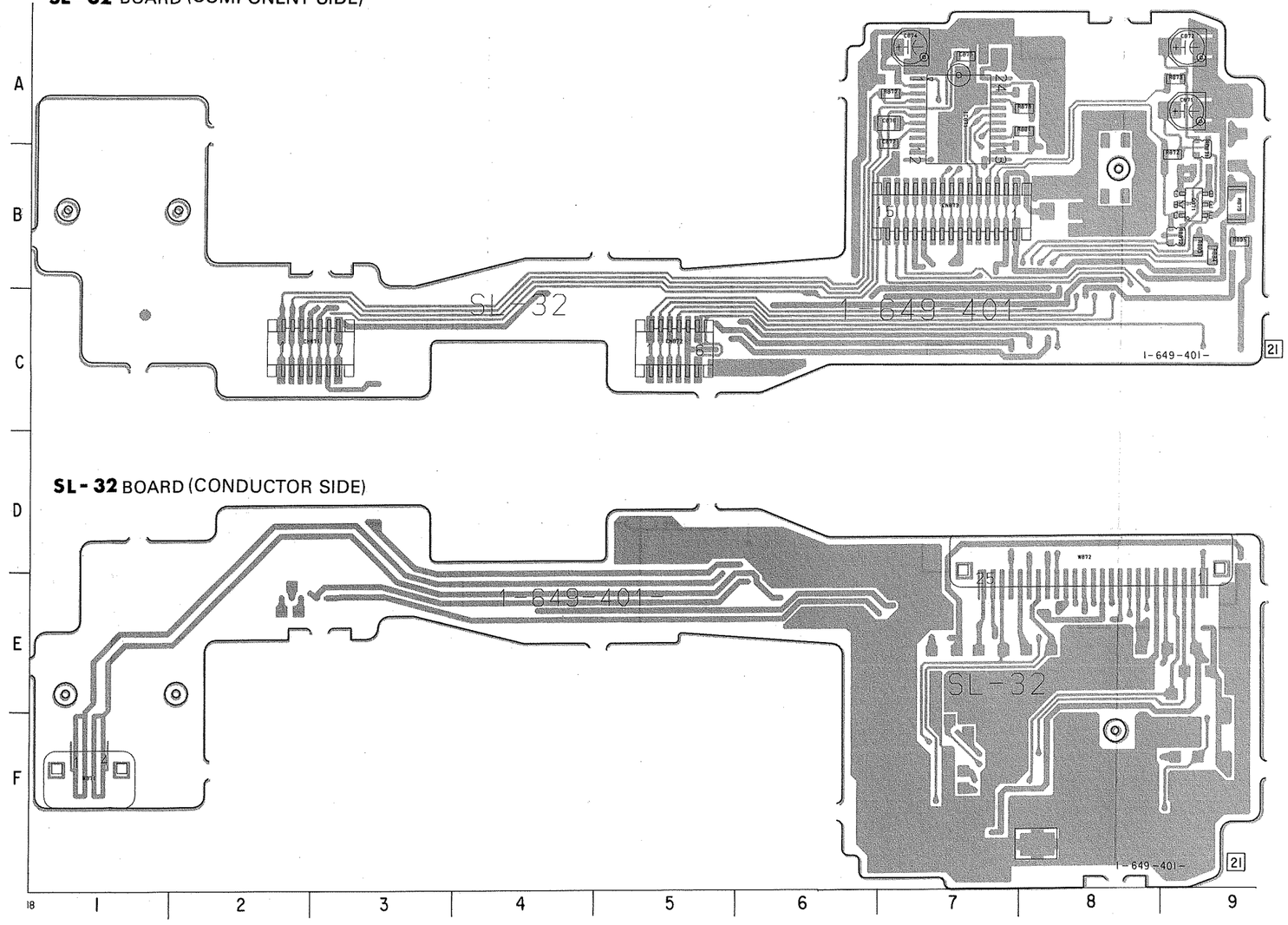

SL-32 BOARD (CONDUCTOR SIDE)

SL-32 BOARD (COMPONENT SIDE)

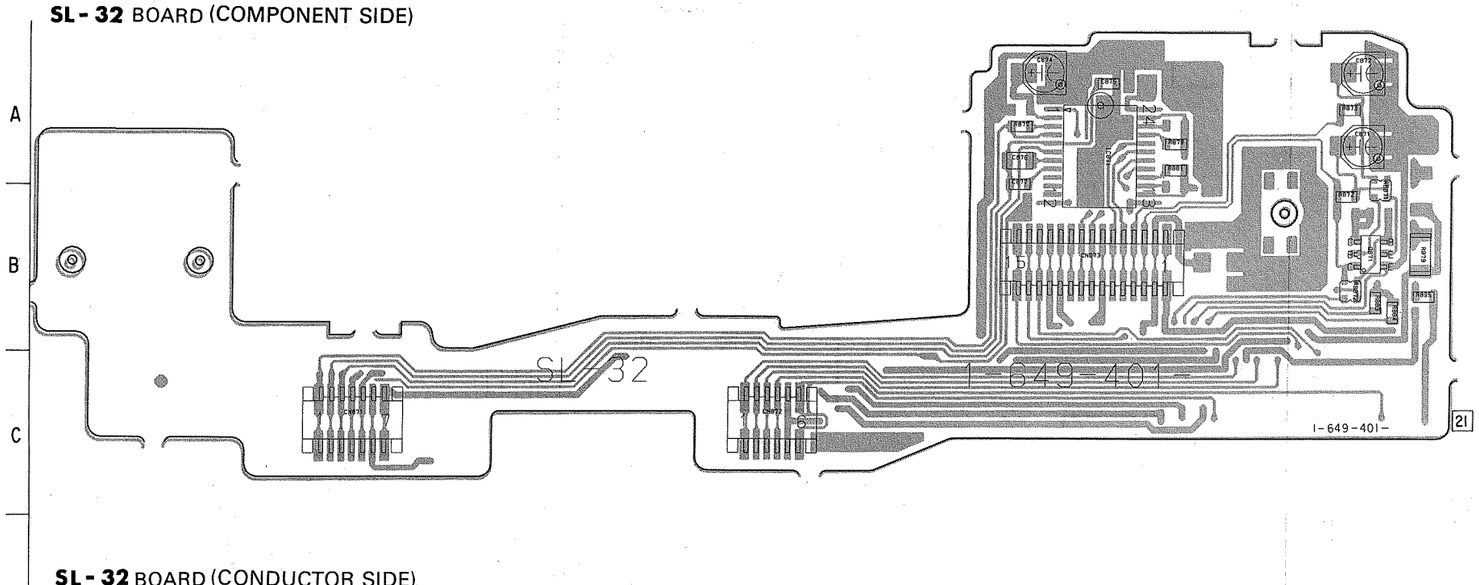

SL-32 BOARD (CONDUCTOR SIDE)

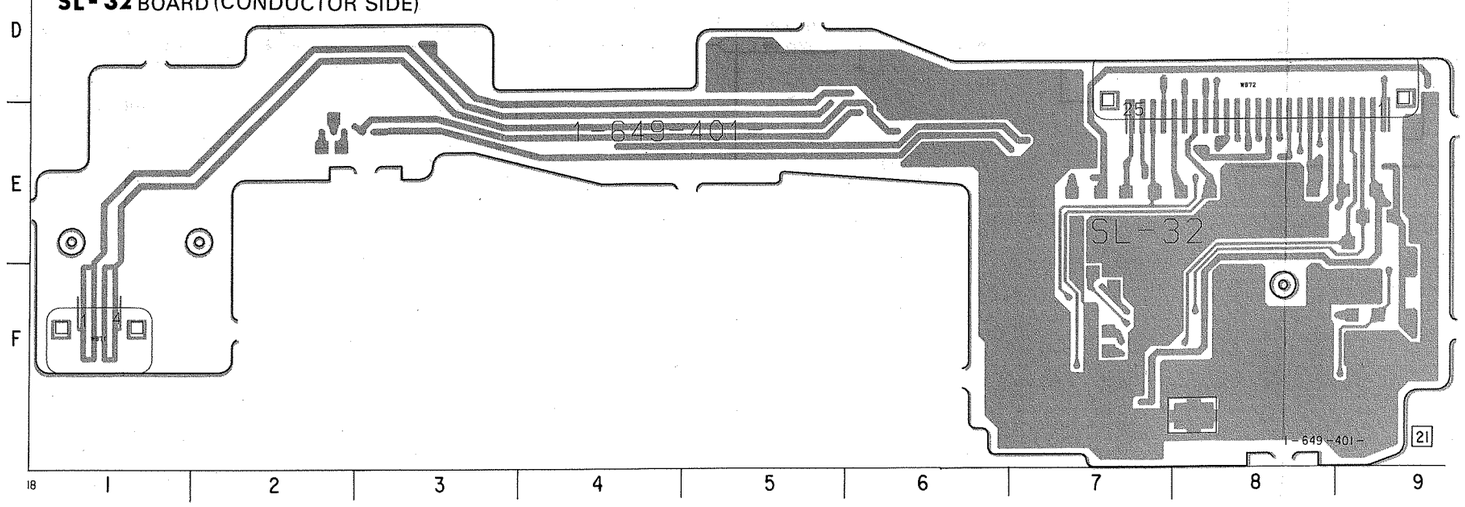

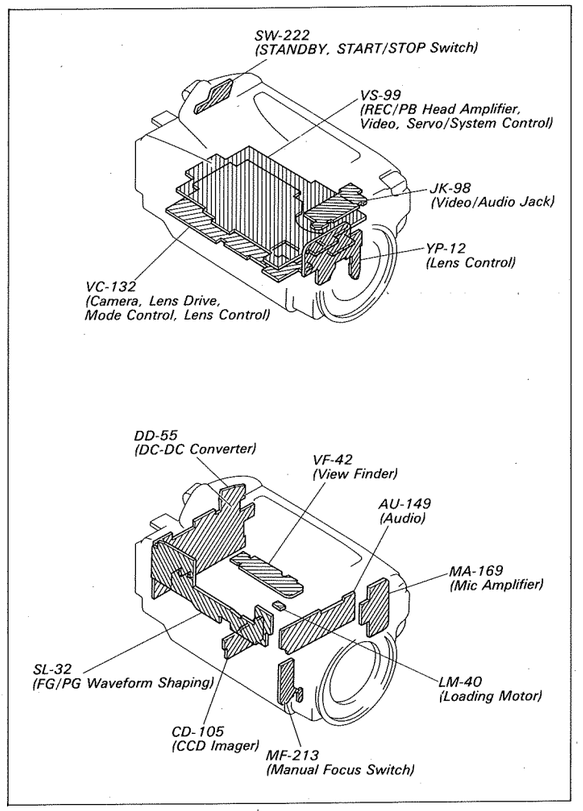

- FP-442, LM-40 boards are replaced as blocks, so that there PRINTED WIRING BOARDS are omitted.
- **For printed wiring boards.**
- SL-32 board is the printed wiring board which has four layers structure but inner two layers' patterns are omitted.
- ●: Through hole is omitted.

Caution:	
Pattern face side: (conductor Side)	Parts on the pattern face side seen from the pattern face are indicated.
Parts face side: (Component side)	Parts on the parts face side seen from the parts face are indicated.

SL-32 (FG/PG WAVEFORM SHAPING), FP-442 (MODE SWITCH), LM-40 (LOADING MOTOR), LS-33 (MECHA SENSOR) SCHEMATIC DIAGRAMS

— Ref. No. SL-32 BOARD: 4,000 series, LS-33 BOARD: 5,000 series —

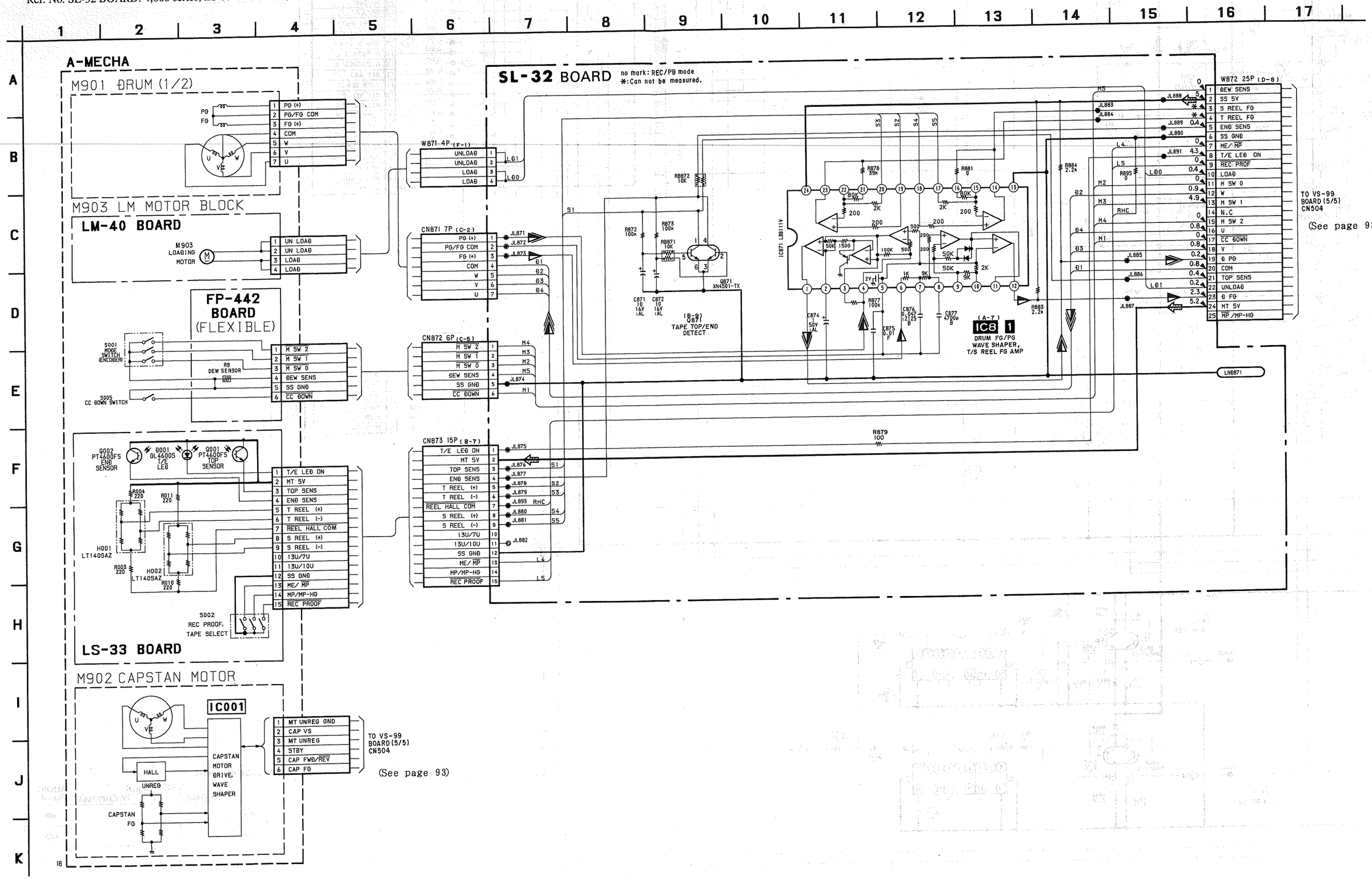

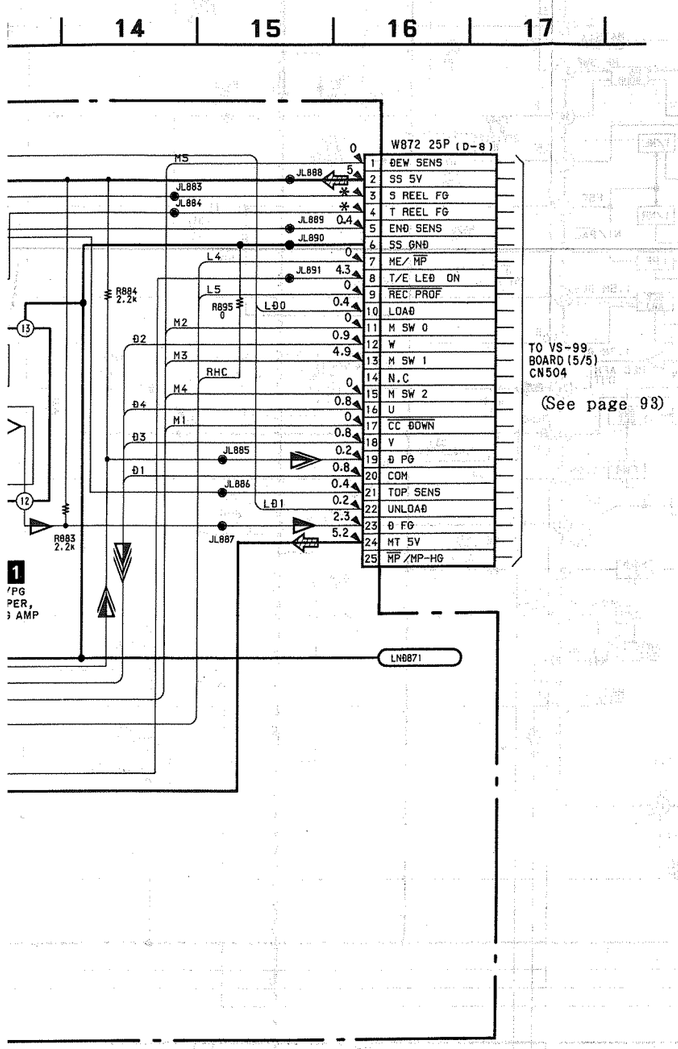

·SIGNAL PATH

	REC	REC/PB	PB
Drum speed servo		▷	
Drum phase serbo		▷▷	
Drum servo (speed and phase)		▷▷▷	
Capstan speed servo			
Capstan phase servo			
Capstan servo (speed and phase)			
Ref. signal			

AU-149 (AUDIO) SCHEMATIC DIAGRAM

— Ref. No. AU-149 BOARD: 7,000 series —

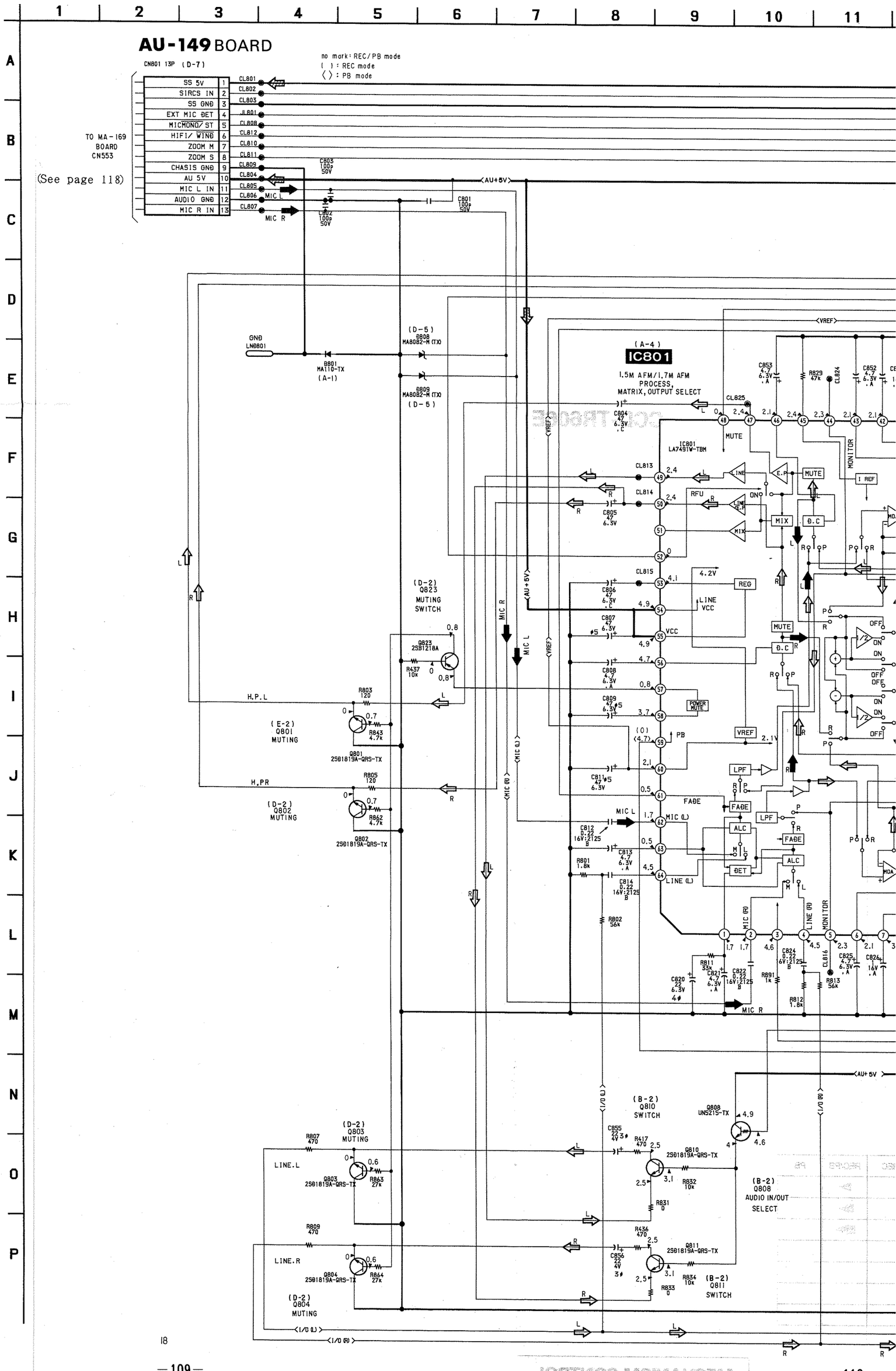

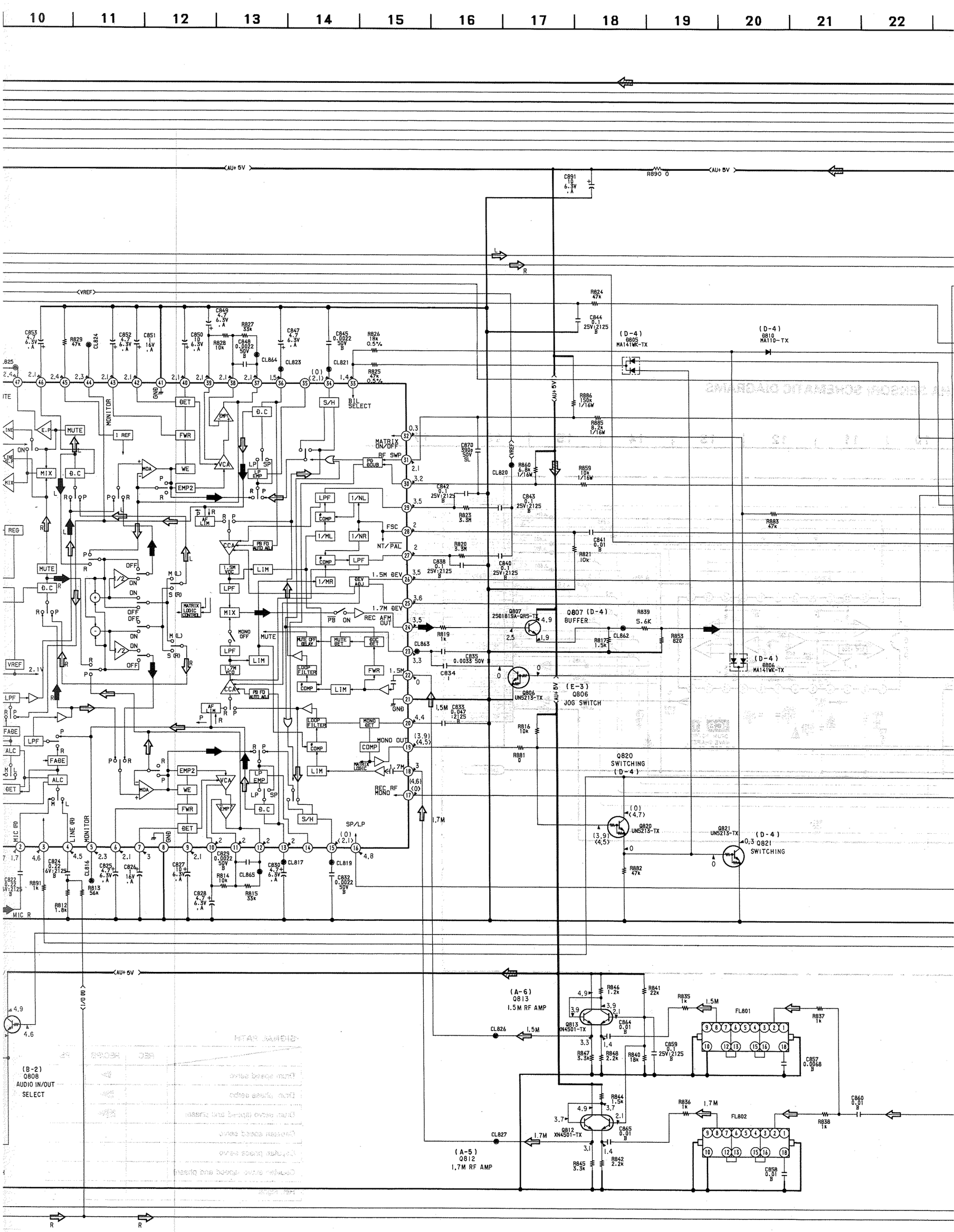
10
11
12
13
14
15
16
17
18
19
20
21
22
AU+ 5V
VREF
R890 0
C891 10 6.3V
R824 47k
C844 0.1 25V:2125 B
(D-4) Q805 MA141WK-TX
(D-4) Q810 MA110-TX
R886 150k 1/16W
R885 8.2k 1/16W
R883 47k
R821 10k
C841 0.01 B
R860 6.8k 1/16W
R859 10k 1/16W
C843 0.1 25V:2125 B
C842 0.1 25V:2125 B
R823 3.3M
R820 3.3M
C838 0.1 25V:2125 B
C840 0.1 25V:2125 B
C870 390p 50V SL
CL820
Q807 2SD1819A-QR5-TX
Q807 (D-4) BUFFER
R839 5.6K
R853 820
R817 1.5k
CL862
R819 1k
CL863
C835 0.0033 50V B
C834 1
Q806 UN5213-TX
(E-3) Q806 JOG SWITCH
(D-4) Q806 MA141WK-TX
R816 10k
R881 0
C833 0.047 :2125 B
Q820 SWITCHING (D-4)
Q820 UN5213-TX
Q821 UN5213-TX
(D-4) Q821 SWITCHING
R882 47k
C891 10 6.3V
C853 4.7 6.3V
R829 47k
CL824
C852 4.7 6.3V
C851 1 16V
C850 10 6.3V
R828 10k
C849 4.7 6.3V
R827 33k
C848 0.0022 50V B
C847 4.7 6.3V
C845 0.0022 50V B
R826 18k 0.5%
R825 47k 0.5%
CL864
CL823
CL821
GND
DET
FWR
WE
EMP2
VCA
EMP1
D.C
S/H
BIL SELECT
MATRIX ON/OFF
RF SWP
PB BOUB
MONITOR
1 REF
MUTE
E.P
MIX
REG
LPF
1/NL
COMP
1/ML
1/NR
FSC
NT/PAL
1/MR
DEV ADJ
1.5M DEV
1.7M DEV
REC AFM OUT
PB ON
MUTE OFF DELAY
MUTE DET
DOC DET
LOOP FILTER
MONO OFF
LIM
1.5M VCO
1.7M VCO
CCA
PB FD AUTO ADJ
AF LIM
MATRIX LOGIC CONTROL
MONO DET
MONO OUT
MATRIX LOGIC
REC RF MONO
SP/LP
FADE
ALC
MDA
LP EMP
SP
LP
MIC (R)
LINE (R)
MIC R
CL816
R813 56k
R891 1k
R812 1.8k
C824 0.22 6V:2125 B
C825 4.7 6.3V
C826 1 16V
C827 10 6.3V
C828 4.7 6.3V
C829 0.0022 50V B
R814 10k
CL865
R815 33k
C830 4.7 6.3V
CL817
CL819
C832 0.0022 50V B
(B-2) Q808 AUDIO IN/OUT SELECT
(A-6) Q813 1.5M RF AMP
Q813 XN4501-TX
R846 1.2k
R841 22k
R835 1k
FL801
R837 1k
C864 0.01 B
R847 3.3k
R848 2.2k
R840 18k
C859 0.1 25V:2125 B
C857 0.0068 B
CL826
(A-5) Q812 1.7M RF AMP
Q812 XN4501-TX
R844 1.5k
R836 1k
FL802
C860 0.01 B
R838 1k
C865 0.01 B
R845 3.3k
R842 2.2k
C858 0.01 B
CL827
I/O (B)

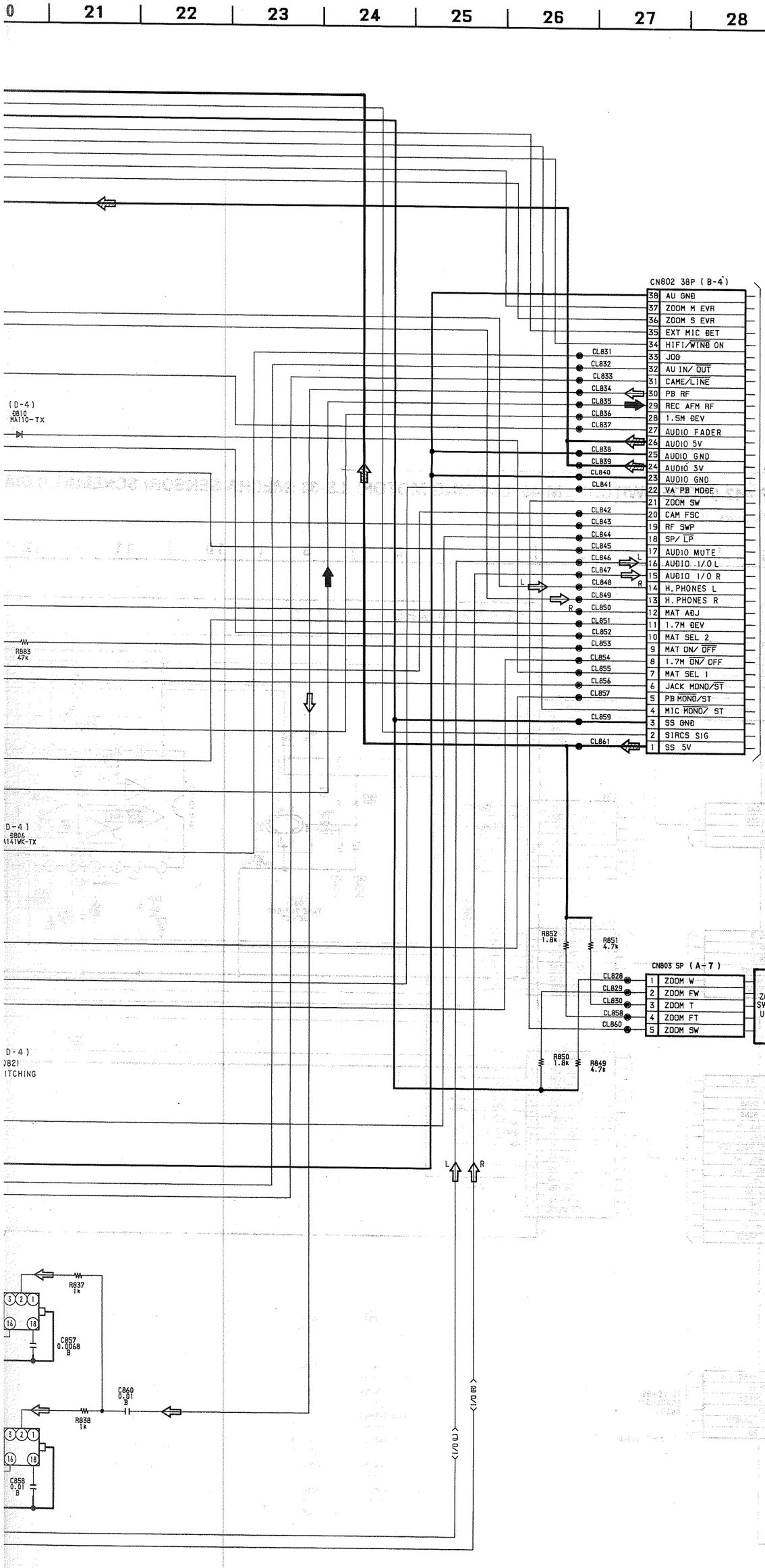

·SIGNAL PATH

	VIDEO Signal			AUDIO Signal
	CHROMA	Y	Y/CHROMA	
REC				➡
PB				⇨

AU-149 (AUDIO) PRINTED WIRING BOARD

— Ref. No. AU-149 BOARD: 7,000 series —

AU-149 BOARD (COMPONENT SIDE)

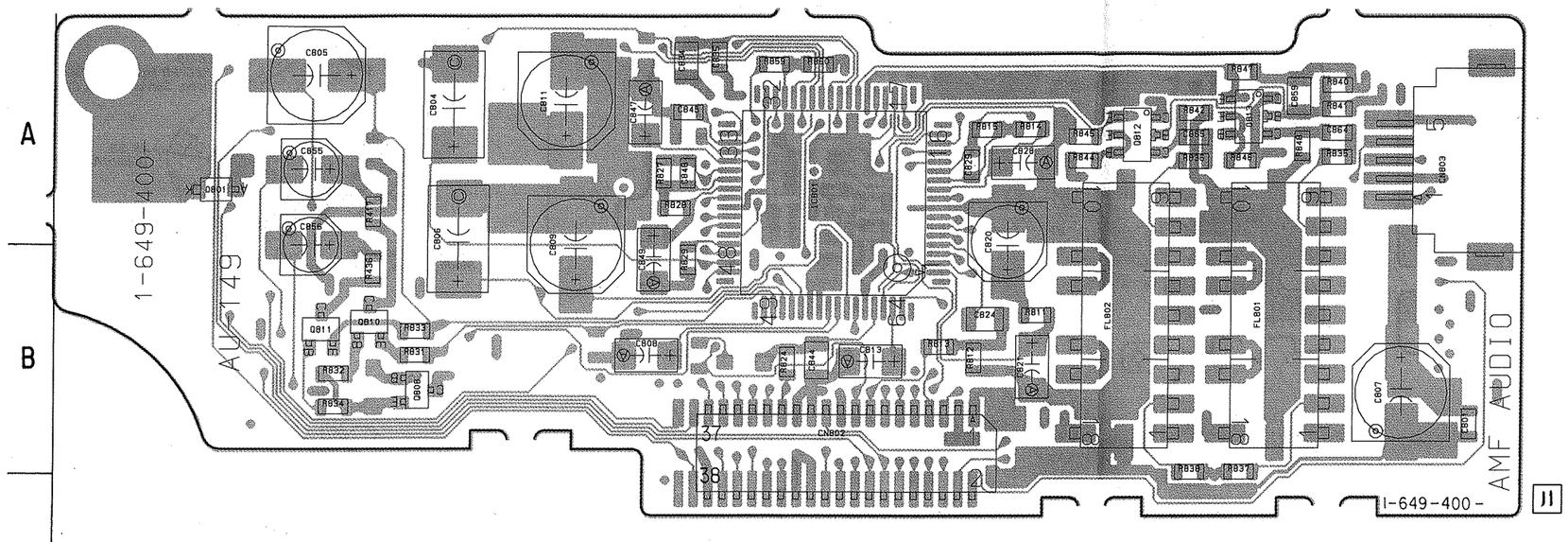

AU-149 BOARD (CONDUCTOR SIDE)

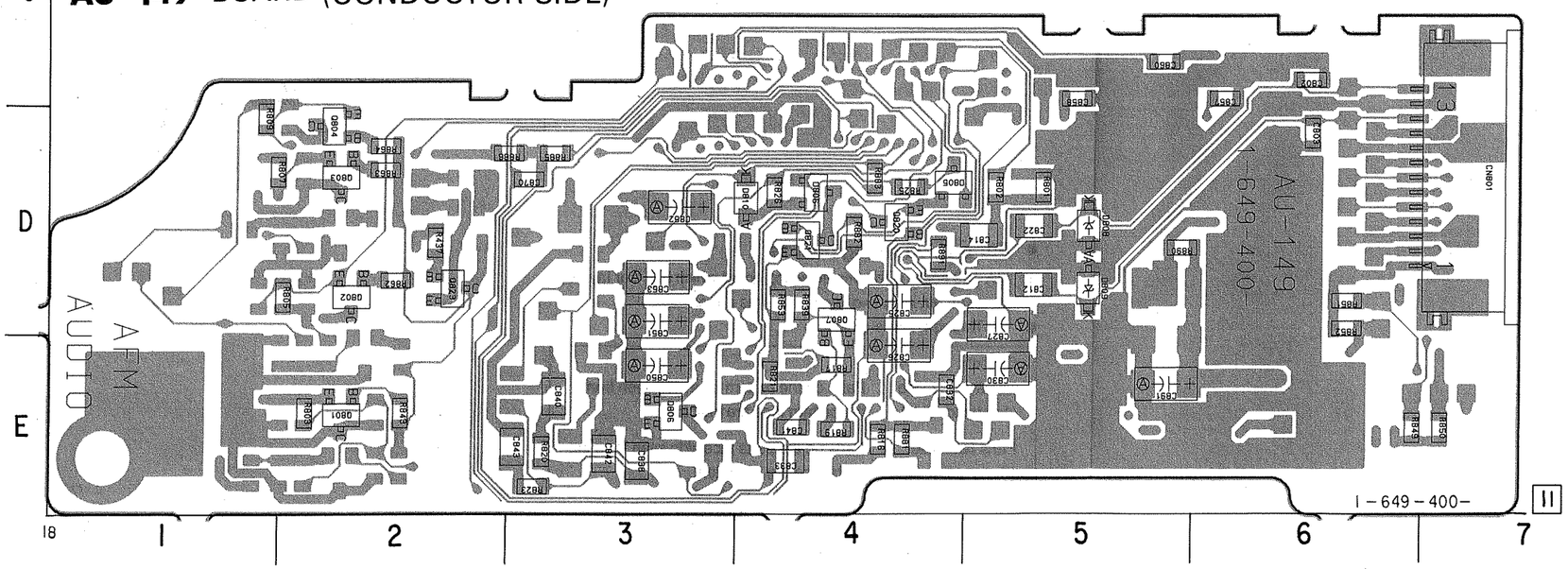

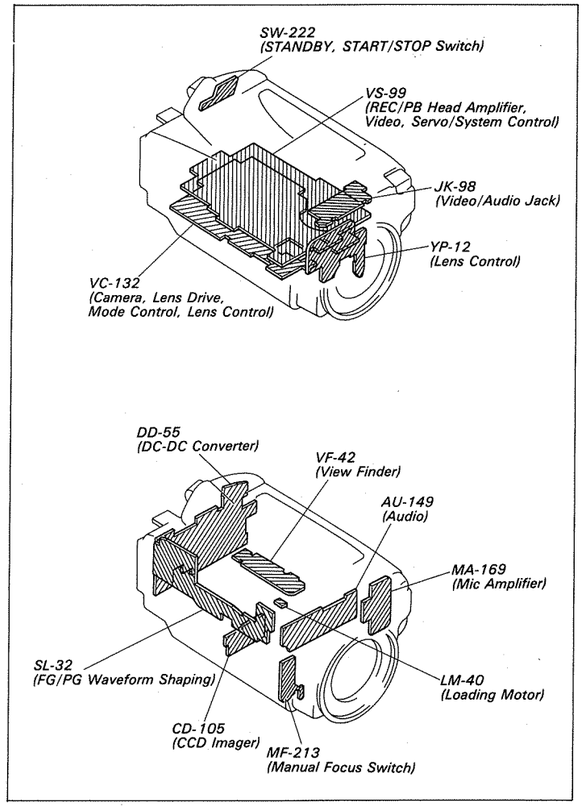

- **For printed wiring boards.**
- AU-149 board is the printed wiring board which has four layers structure but inner two layers' patterns are omitted.
- ●: Through hole is omitted.

Caution:	
Pattern face side: (conductor Side)	Parts on the pattern face side seen from the pattern face are indicated.
Parts face side: (Component side)	Parts on the parts face side seen from the parts face are indicated.

MA-169 (MIC AMPLIFIER) PRINTED WIRING BOARD

— Ref. No. MA-169 BOARD: 7,000 series —

MA-169 BOARD (COMPONENT SIDE)

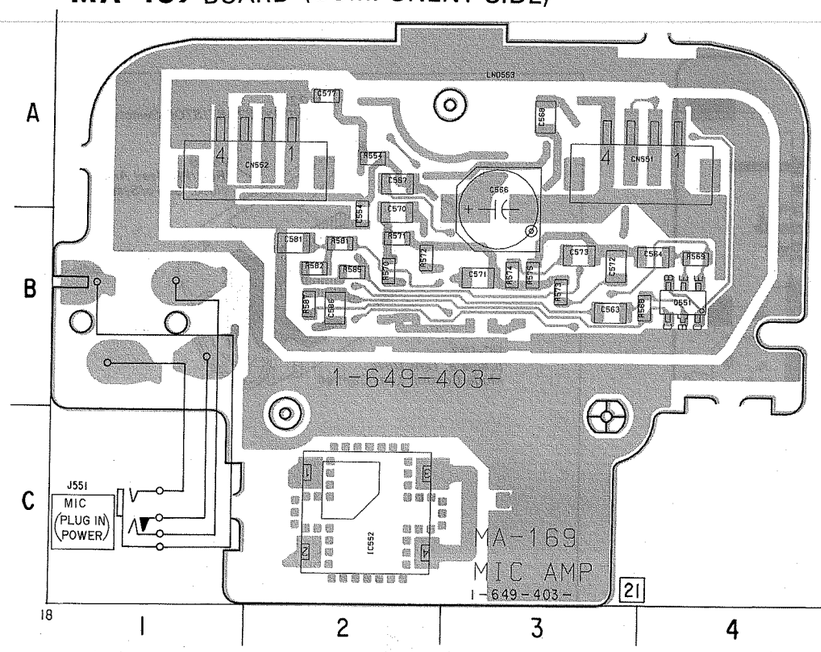

MA-169 BOARD (CONDUCTOR SIDE)

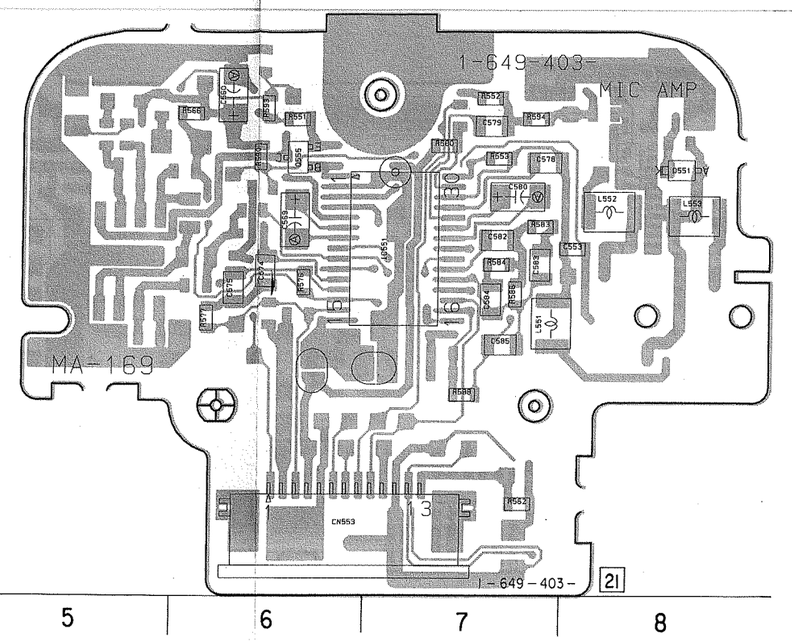

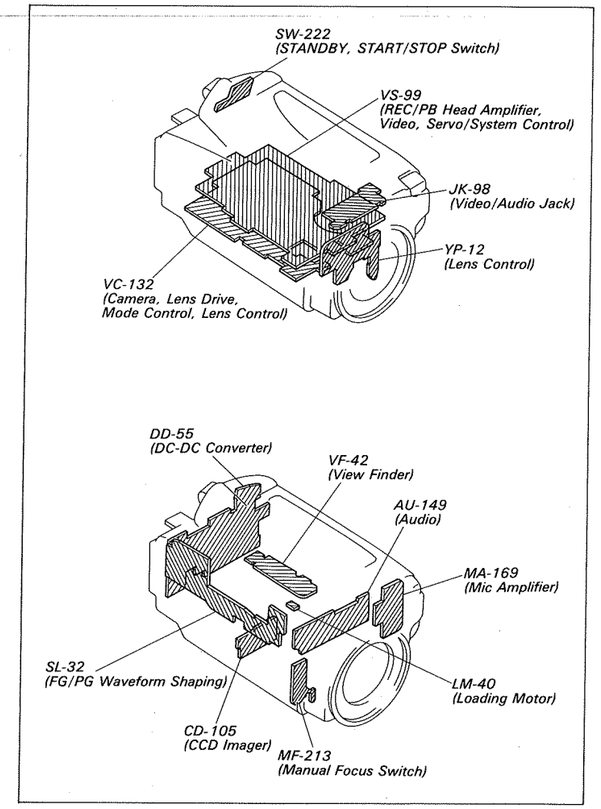

- **For printed wiring boards.**
- MA-169 board is the printed wiring board which has four layers structure but inner two layers' patterns are omitted.
- ●: Through hole is omitted.

Caution:	
Pattern face side: (conductor Side)	Parts on the pattern face side seen from the pattern face are indicated.
Parts face side: (Component side)	Parts on the parts face side seen from the parts face are indicated.

MA-169 (MIC AMPLIFIER) SCHEMATIC DIAGRAM

— Ref. No. MA-169 BOARD: 7,000 series —

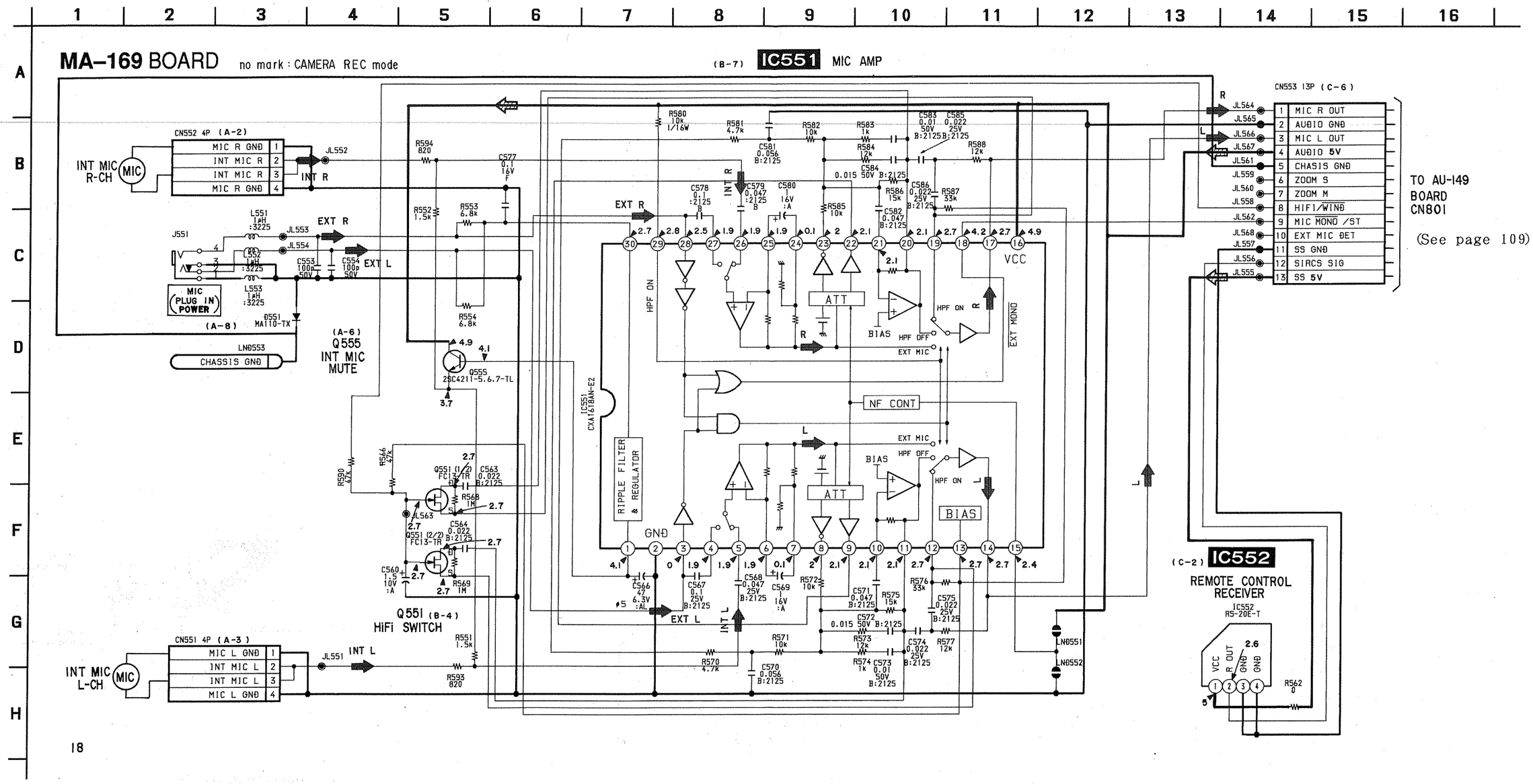

18

·SIGNAL PATH

	VIDEO Signal			AUDIO Signal
	CHROMA	Y	Y/CHROMA	
REC				➡
PB				

VF-42 (VIEW FINDER) PRINTED WIRING BOARD

— Ref. No. VF-42 BOARD: 8,000 series —

VF-42 BOARD (COMPONENT SIDE)

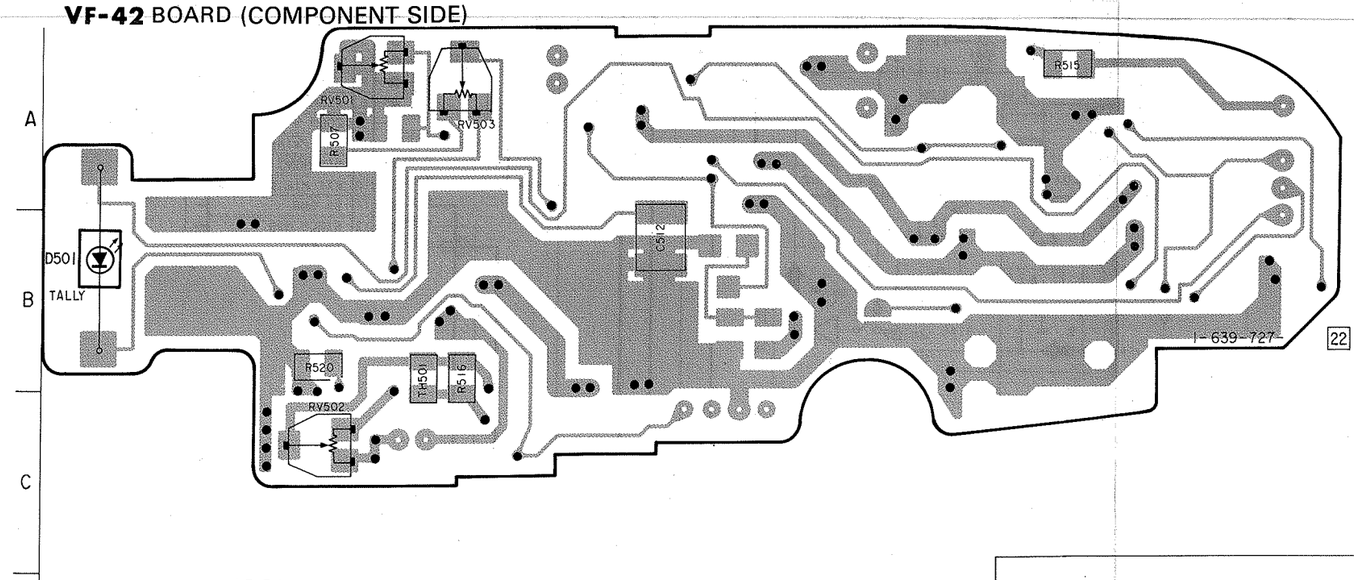

VF-42 BOARD (CONDUCTOR SIDE)

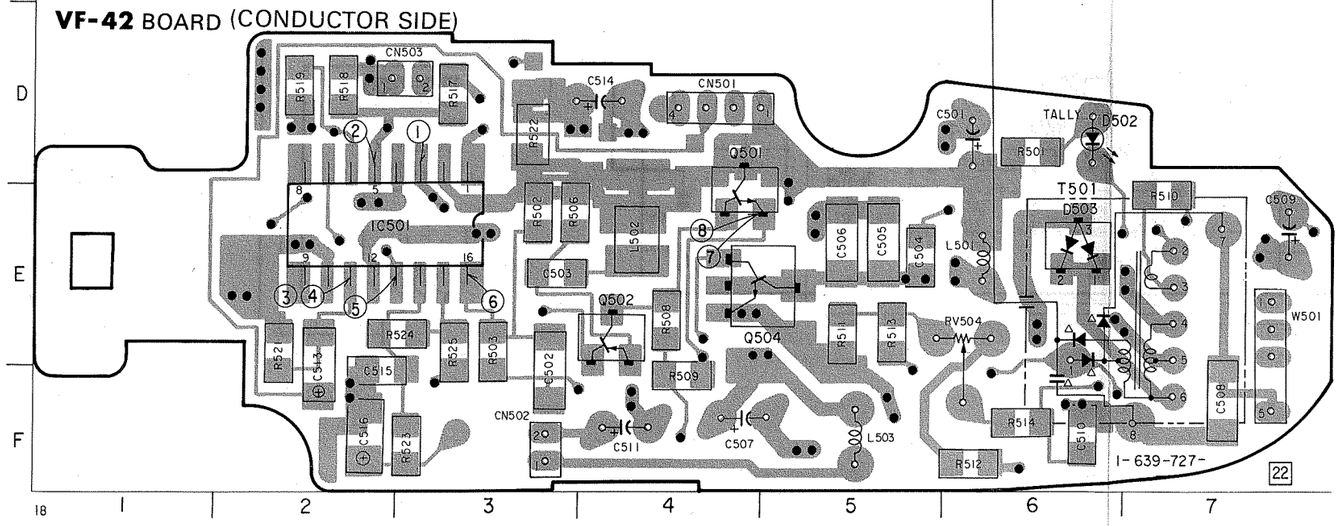

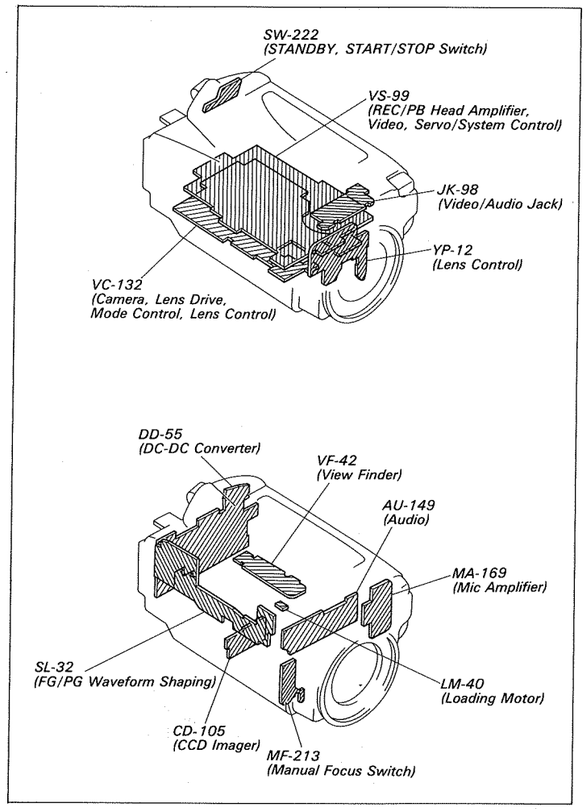

- **For printed wiring boards.**
- ●: Through hole.

Caution:	
Pattern face side: (conductor Side)	Parts on the pattern face side seen from the pattern face are indicated.
Parts face side: (Component side)	Parts on the parts face side seen from the parts face are indicated.

VF-42 (VIEW FINDER) SCHEMATIC DIAGRAM

— Ref. No. VF-42 BOARD: 8,000 series —

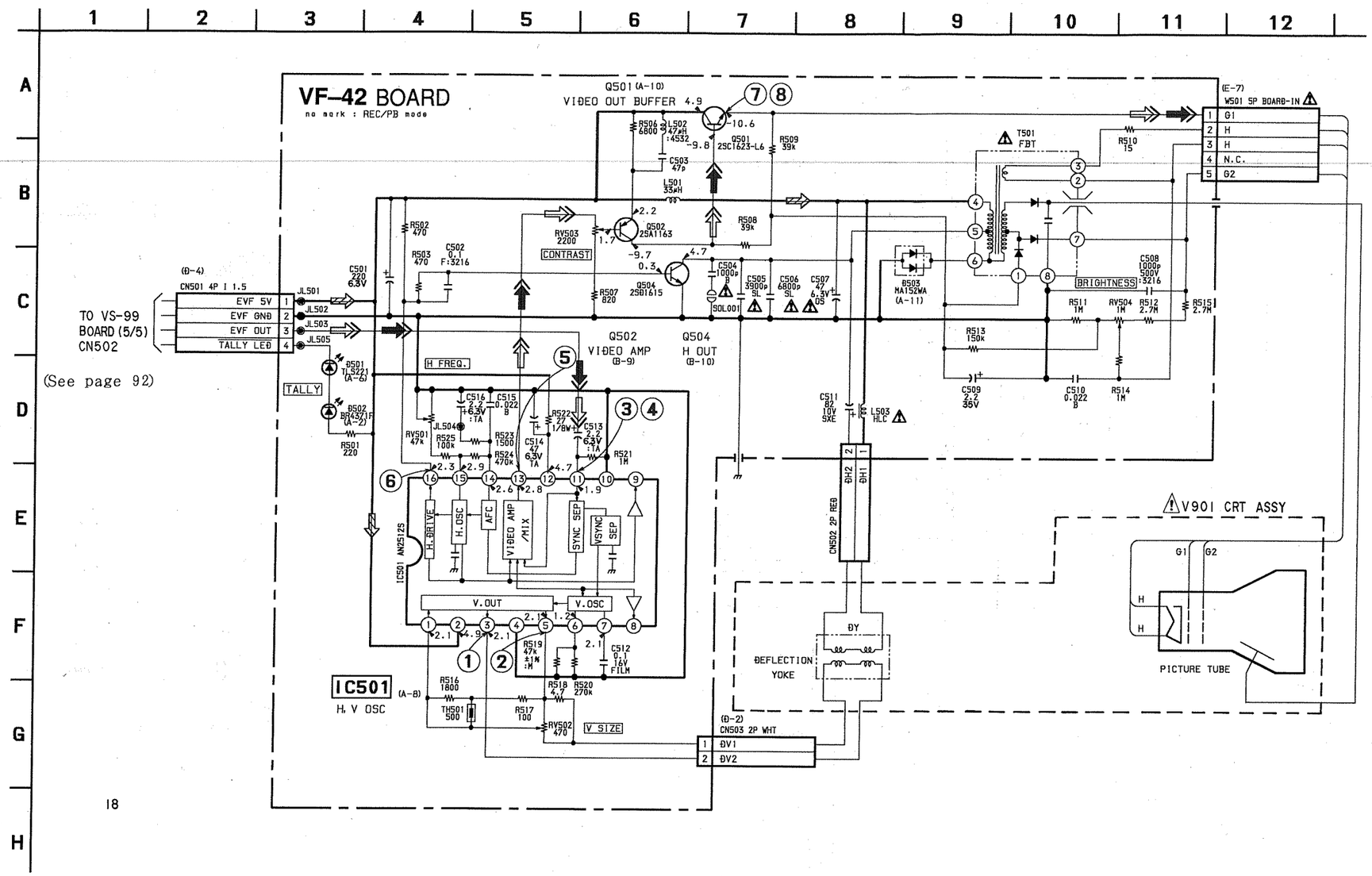

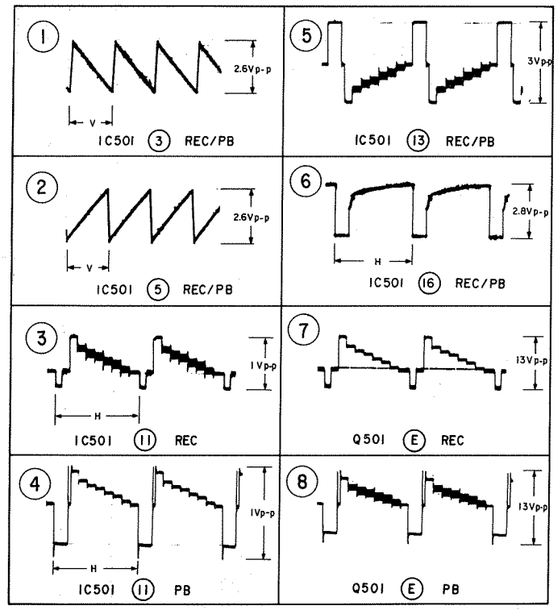

Note: The components identified by mark ⚠ or dotted line with mark ⚠ are critical for safety. Replace only with part number specified.

·SIGNAL PATH

	VIDEO Signal			AUDIO Signal
	CHROMA	Y	Y/CHROMA	
REC		➡		
PB		⇨		

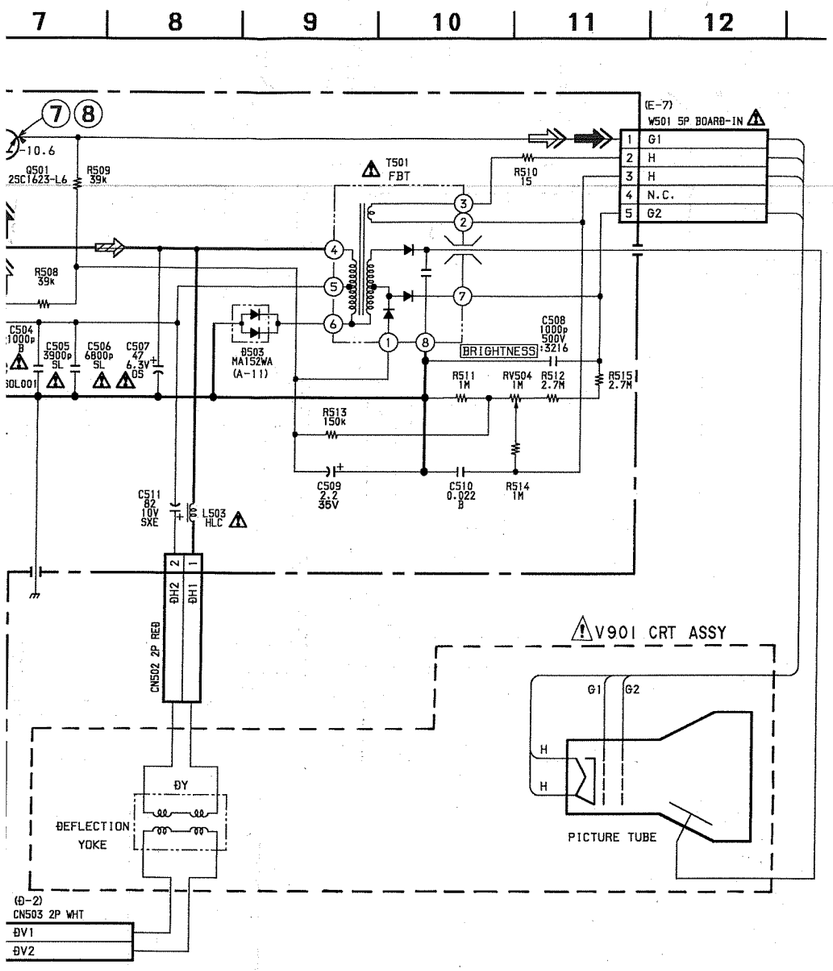

VF-42 BOARD

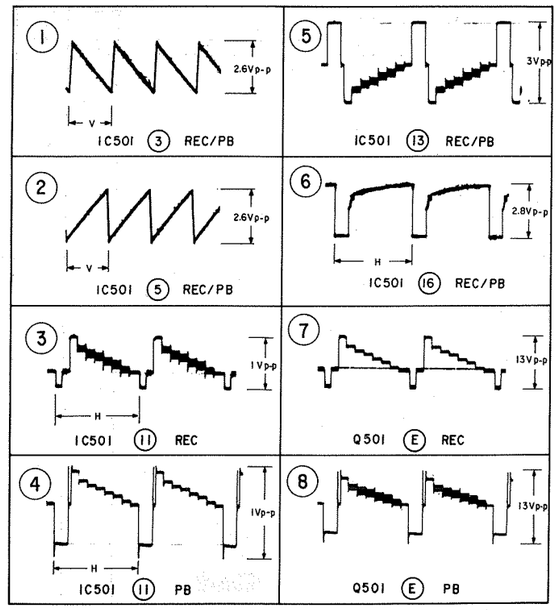

Note: The components identified by mark ⚠ or dotted line with mark ⚠ are critical for safety. Replace only with part number specified.

·SIGNAL PATH

	VIDEO Signal			AUDIO Signal
	CHROMA	Y	Y/CHROMA	
REC		➡		
PB		⇨		

DD-55 (DC-DC CONVERTER) SCHEMATIC DIAGRAM

— Ref. No. DD-55 BOARD: 9,000 series —

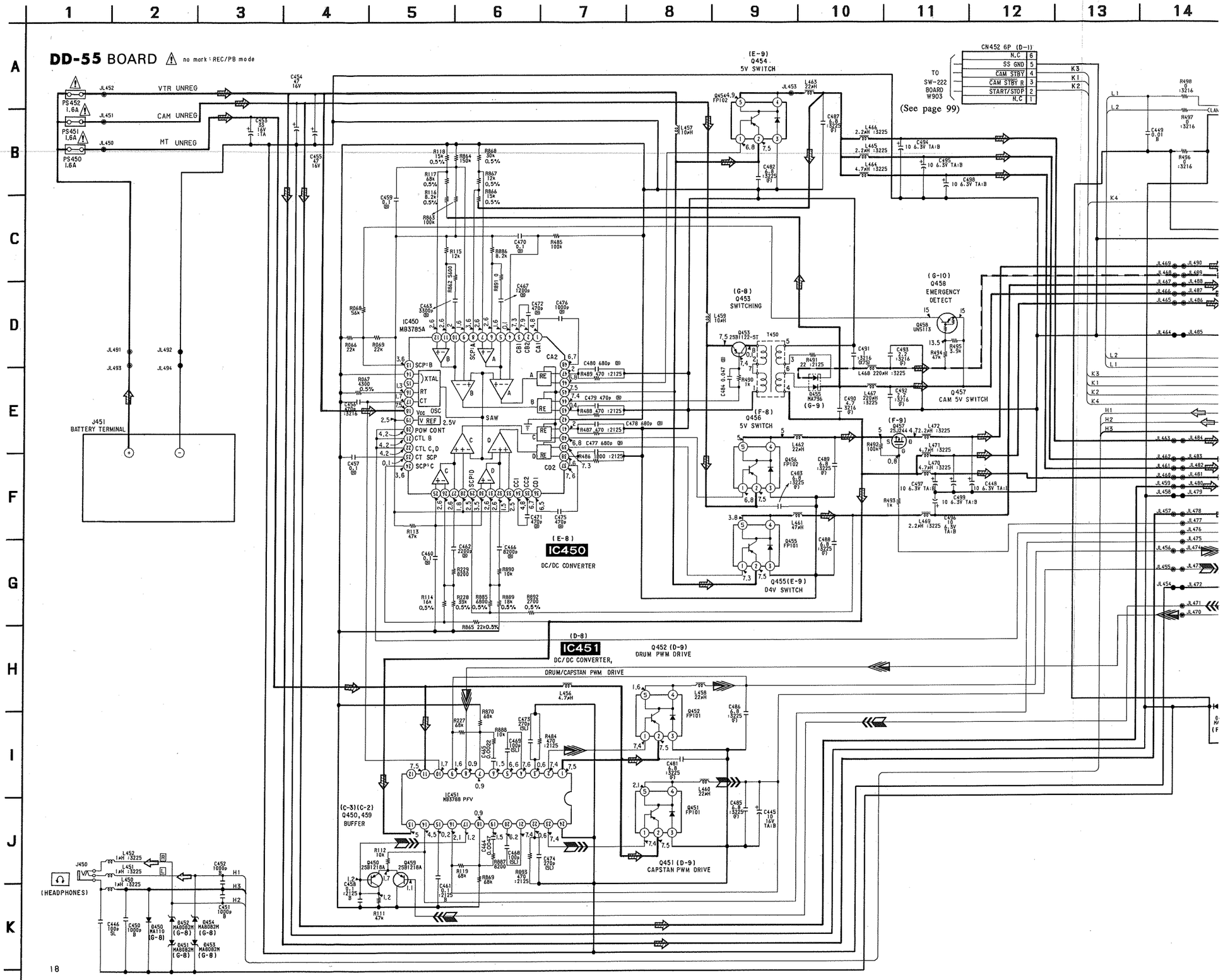

Note: The components identified by mark ⚠ or dotted line with mark ⚠ are critical for safety. Replace only with part number specified.

·SIGNAL PATH

	VIDEO Signal			AUDIO Signal
	CHROMA	Y	Y/CHROMA	
REC				
PB				⇨

	REC	REC/PB	PB
Drum speed servo			
Drum phase serbo			
Drum servo (speed and phase)		▶▶	
Capstan speed servo			
Capstan phase servo			
Capstan servo (speed and phase)		▶▶▶	
Ref. signal			

18

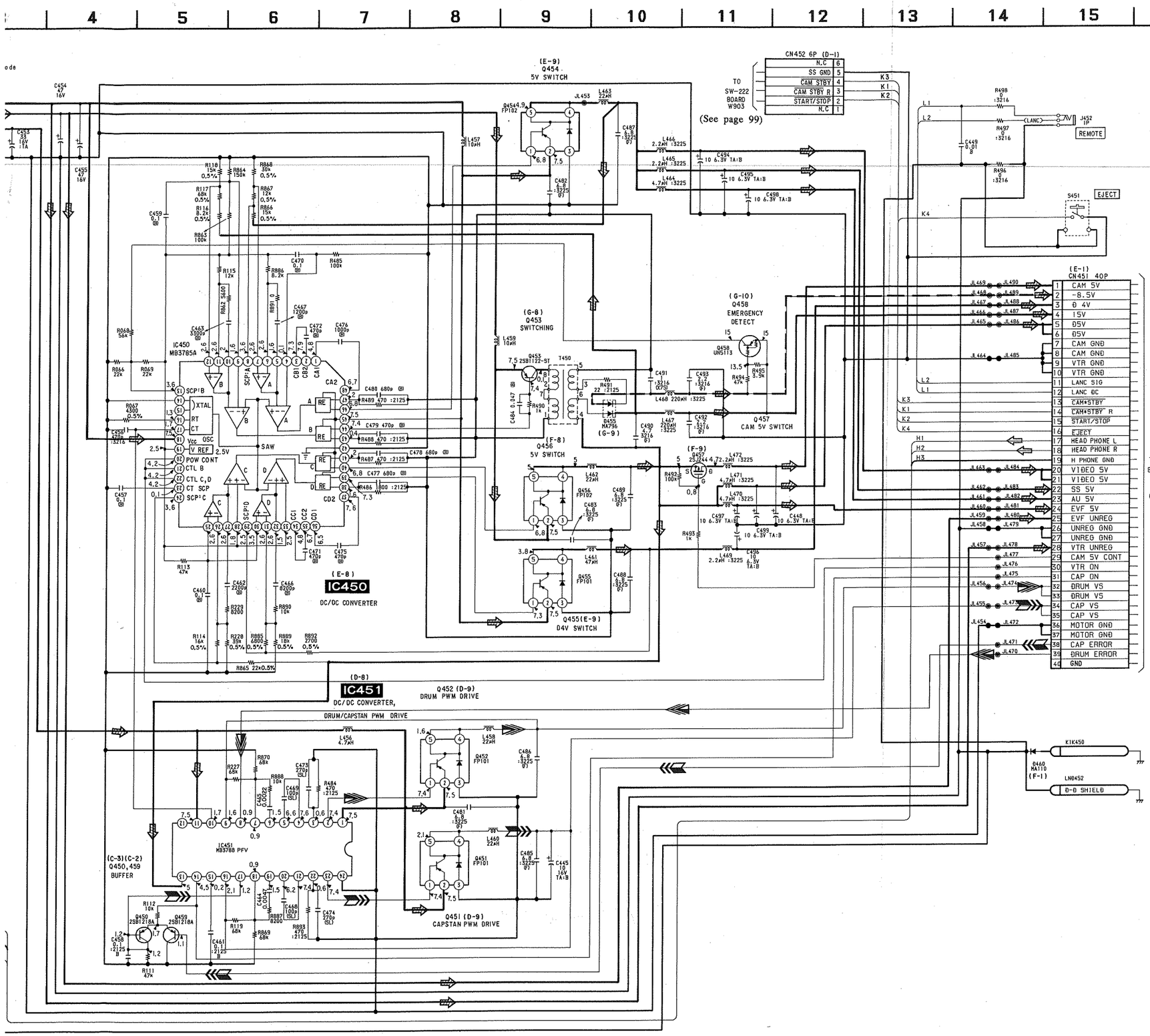

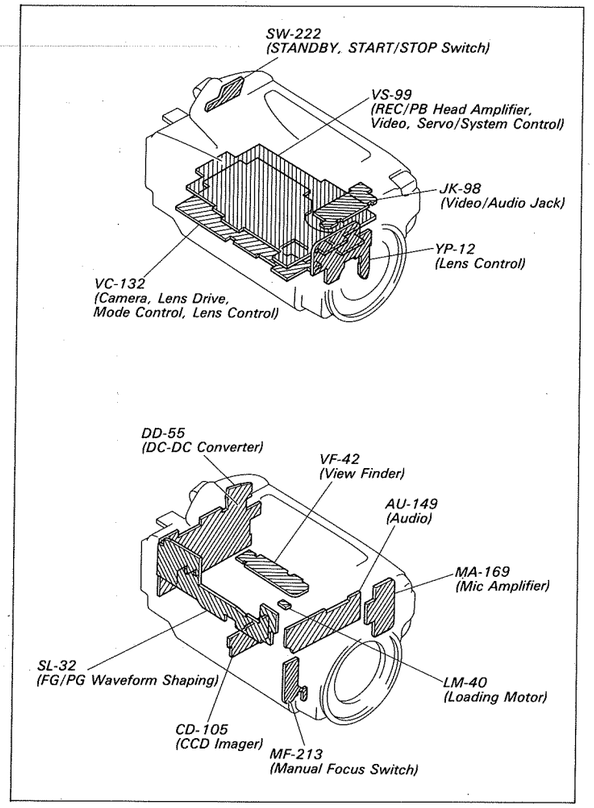

- **For printed wiring boards.**
- DD-55 board is the printed wiring board which has four layers structure but inner two layers' patterns are omitted.
- ●: Through hole is omitted.

Caution:	
Pattern face side: (conductor Side)	Parts on the pattern face side seen from the pattern face are indicated.
Parts face side: (Component side)	Parts on the parts face side seen from the parts face are indicated.

DD-55 (DC-DC CONVERTER) PRINTED WIRING BOARD

— Ref. No. DD-55 BOARD: 9,000 series —

DD-55 BOARD (COMPONENT SIDE)

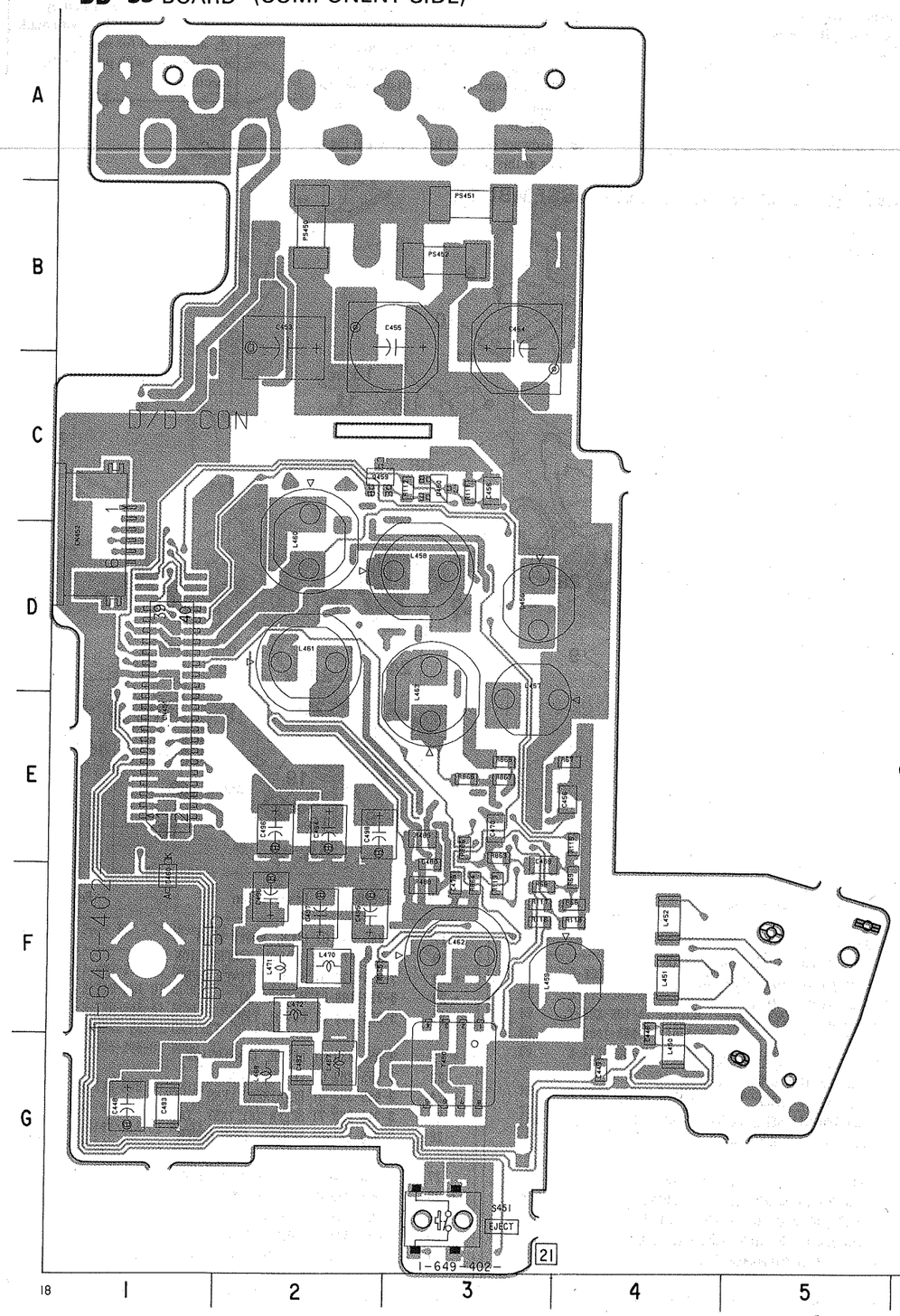

DD-55 BOARD (CONDUCTOR SIDE)

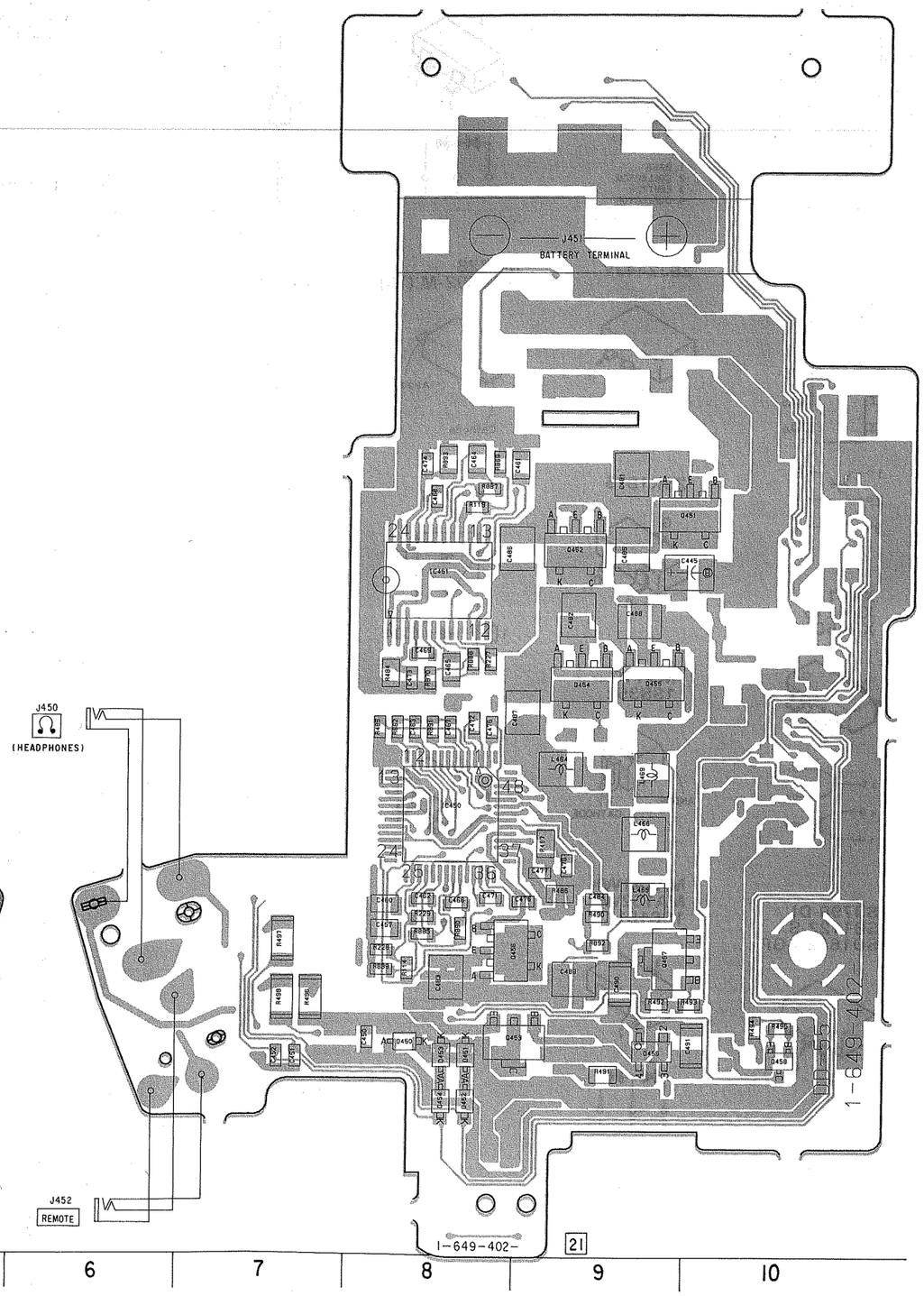

4-3. SEMICONDUCTORS

FC13

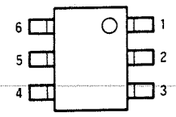

1: Gate 1
2: Drain 1
3: Source 1
4: Gate 2
5: Drain 2
6: Source 2

XN4401
XP4501

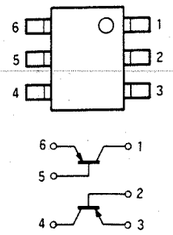

2SB1574

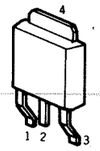

1. BASE
2. COLLECTOR
3. EMITTER
4. COLLECTOR

MA142WK

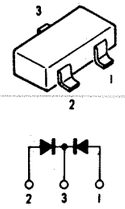

TLS221

FP101
FP102

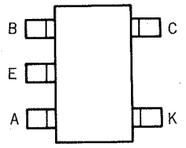

XN4312
XN4601

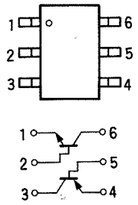

2SJ244JY

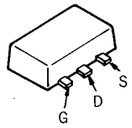

MA728
MA8082-M (TX)

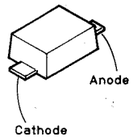

BR4371F

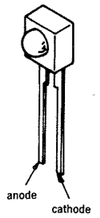

MSA1586-BC
MSC4116-B/C
RN1302-TE85L
UN511E
UN5113
UN5213
UN5215
UN9113
2SA1162-G
2SA1163-G
2SA1611-M5M6
2SB1218A-QRS
2SB1295-UL5
2SB1462-Q
2SC1623-L5L6
2SC2223-F13
2SC4116-YG
2SC4154-F
2SC4211-5. 6. 7
2SC4400-3/4/5
2SC4919
2SD1819A-R
2SD2216-Q

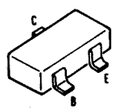

XN4113
XN4213
XN4501

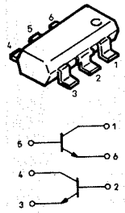

2SK1875

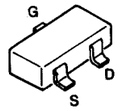

MA796

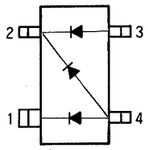

MA110
1SS352

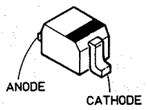

1SS226

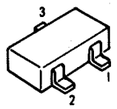

2SB798-DL
2SB1122-S
2SD1615A-GP

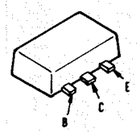

MA141WK
MA152WA
1SS181

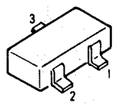

SECTION 5
EXPLODED VIEWS

NOTE:
- -xx,-x mean standardized parts, so they may have some differences from the original one.
- Items marked "*" are not stocked since they are seldom required for routine service. Some delay should be anticipated when ordering these items.
- The mechanical parts with no reference number in the exploded views are not supplied.
- Hardware (#mark) list is given in the last of this parts list.

The components identified by mark ⚠ or dotted line with mark ⚠ are critical for safety. Replace only with part number specified.

5-1. CABINET (L) AND FRONT PANEL ASSEMBLIES

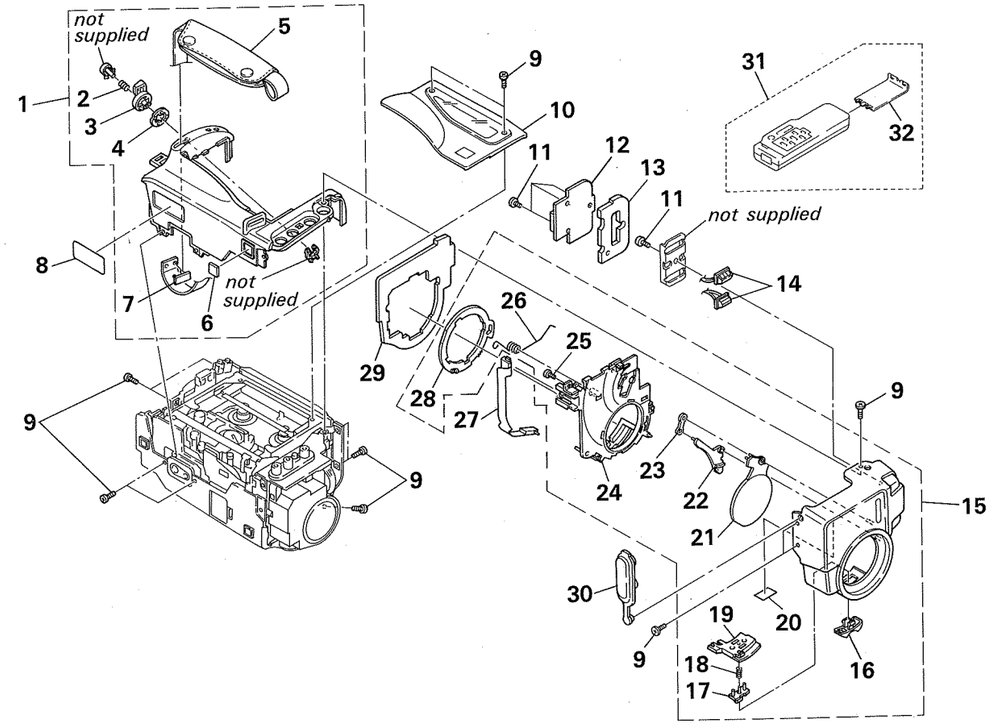

Ref. No.	Part No.	Description	Remark
1	X-3943-241-1	CABINET (L) ASSY	
2	3-578-221-00	SPRING, COMPRESSION	
3	3-942-985-01	KNOB, STAND-BY	
4	3-736-364-01	SPRING	
5	3-736-807-01	BELT, GRIP	
* 6	3-949-383-01	FOOT, RUBBER	
7	3-942-895-01	STOPPER, BELT	
* 8	3-955-162-01	LABEL, MODEL NUMBER (AEP)	
* 8	3-956-190-01	LABEL, MODEL NUMBER (UK, E, Australian)	
9	3-719-381-01	SCREW (M2X4)	
10	X-3943-239-1	LID ASSY, CASSETTE	
11	3-719-601-01	SCREW (B2X5), TAPPING	
12	A-7063-696-A	MA-169 BOARD, COMPLETE	
* 13	3-955-754-01	CUSHION, ACOUSTIC ISOLATION	
14	1-542-162-11	MICROHONE UNIT	
15	X-3943-243-1	PANEL ASSY, FRONT	
16	3-955-332-01	KNOB, POWER	

Ref. No.	Part No.	Description	Remark
* 17	3-955-334-01	LOCK, POWER KNOB	
18	3-303-973-01	SPRING, COMPRESSION	
* 19	3-955-333-01	SLIDER, POWER KNOB	
* 20	3-332-189-01	SPACER (A)	
21	3-955-331-01	COVER, LENS	
* 22	3-955-330-01	LEVER, CONVERSION	
23	3-955-289-01	LEVER, JOINT	
* 24	3-955-307-01	RETAINER, LENS COVER	
25	3-318-203-71	SCREW (B1.7X5), TAPPING	
26	3-955-291-01	SPRING, LENS COVER	
27	1-692-680-11	SWITCH ASSY, BLOCK	
* 28	3-955-335-01	RING, CONVERSION	
* 29	3-956-191-01	CUSHION (ISO)	
30	3-955-338-01	COVER, JACK	
31	1-467-339-11	REMOTE COMMANDER (RMT-706)	
32	3-947-500-01	LID, BATTERY CASE	

4-3. SEMICONDUCTORS

FC13

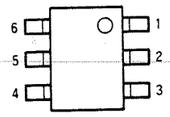

1: Gate 1
2: Drain 1
3: Source 1
4: Gate 2
5: Drain 2
6: Source 2

XN4401
XP4501

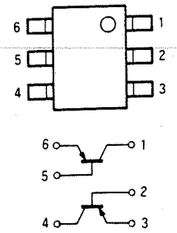

2SB1574

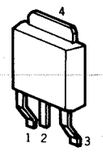

1. BASE
2. COLLECTOR
3. EMITTER
4. COLLECTOR

MA142WK

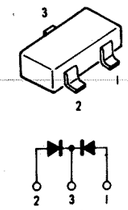

TLS221

FP101
FP102

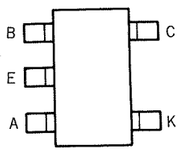

XN4312
XN4601

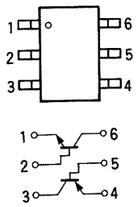

2SJ244JY

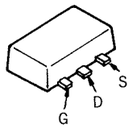

MA728
MA8082-M (TX)

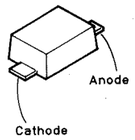

BR4371F

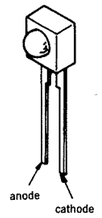

MSA1586-BC
MSC4116-B/C
RN1302-TE85L
UN511E
UN5113
UN5213
UN5215
UN9113
2SA1162-G
2SA1163-G
2SA1611-M5M6
2SB1218A-QRS
2SB1295-UL5
2SB1462-Q
2SC1623-L5L6
2SC2223-F13
2SC4116-YG
2SC4154-F
2SC4211-5, 6, 7
2SC4400-3/4/5
2SC4919
2SD1819A-R
2SD2216-Q

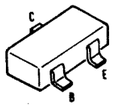

2SK1875

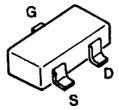

MA796

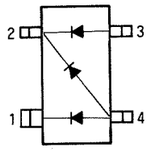

XN4113
XN4213
XN4501

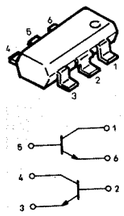

MA110
1SS352

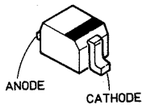

1SS226

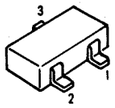

2SB798-DL
2SB1122-S
2SD1615A-GP

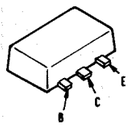

MA141WK
MA152WA
1SS181

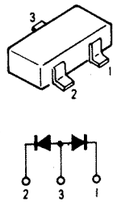

SECTION 5
EXPLODED VIEWS

NOTE:
- -xx,-x mean standardized parts, so they may have some differences from the original one.
- Items marked "*" are not stocked since they are seldom required for routine service. Some delay should be anticipated when ordering these items.
- The mechanical parts with no reference number in the exploded views are not supplied.
- Hardware (#mark) list is given in the last of this parts list.

The components identified by mark ⚠ or dotted line with mark ⚠ are critical for safety. Replace only with part number specified.

5-1. CABINET (L) AND FRONT PANEL ASSEMBLIES

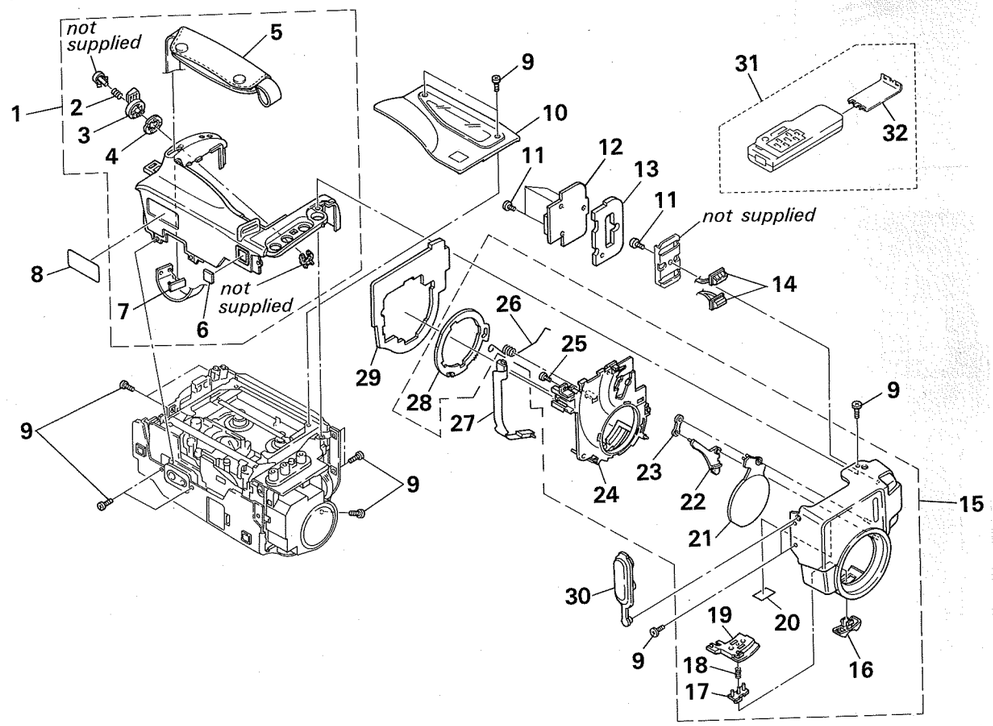

Ref. No.	Part No.	Description	Remark
1	X-3943-241-1	CABINET (L) ASSY	
2	3-578-221-00	SPRING, COMPRESSION	
3	3-942-985-01	KNOB, STAND-BY	
4	3-736-364-01	SPRING	
5	3-736-807-01	BELT, GRIP	
* 6	3-949-383-01	FOOT, RUBBER	
7	3-942-895-01	STOPPER, BELT	
* 8	3-955-162-01	LABEL, MODEL NUMBER (AEP)	
* 8	3-956-190-01	LABEL, MODEL NUMBER (UK, E, Australian)	
9	3-719-381-01	SCREW (M2X4)	
10	X-3943-239-1	LID ASSY, CASSETTE	
11	3-719-601-01	SCREW (B2X5), TAPPING	
12	A-7063-696-A	MA-169 BOARD, COMPLETE	
* 13	3-955-754-01	CUSHION, ACOUSTIC ISOLATION	
14	1-542-162-11	MICROHONE UNIT	
15	X-3943-243-1	PANEL ASSY, FRONT	
16	3-955-332-01	KNOB, POWER	
* 17	3-955-334-01	LOCK, POWER KNOB	
18	3-303-973-01	SPRING, COMPRESSION	
* 19	3-955-333-01	SLIDER, POWER KNOB	
* 20	3-332-189-01	SPACER (A)	
21	3-955-331-01	COVER, LENS	
* 22	3-955-330-01	LEVER, CONVERSION	
23	3-955-289-01	LEVER, JOINT	
* 24	3-955-307-01	RETAINER, LENS COVER	
25	3-318-203-71	SCREW (B1.7X5), TAPPING	
26	3-955-291-01	SPRING, LENS COVER	
27	1-692-680-11	SWITCH ASSY, BLOCK	
* 28	3-955-335-01	RING, CONVERSION	
* 29	3-956-191-01	CUSHION (ISO)	
30	3-955-338-01	COVER, JACK	
31	1-467-339-11	REMOTE COMMANDER (RMT-706)	
32	3-947-500-01	LID, BATTERY CASE	

5-2. CABINET (R) AND EVF ASSEMBLIES

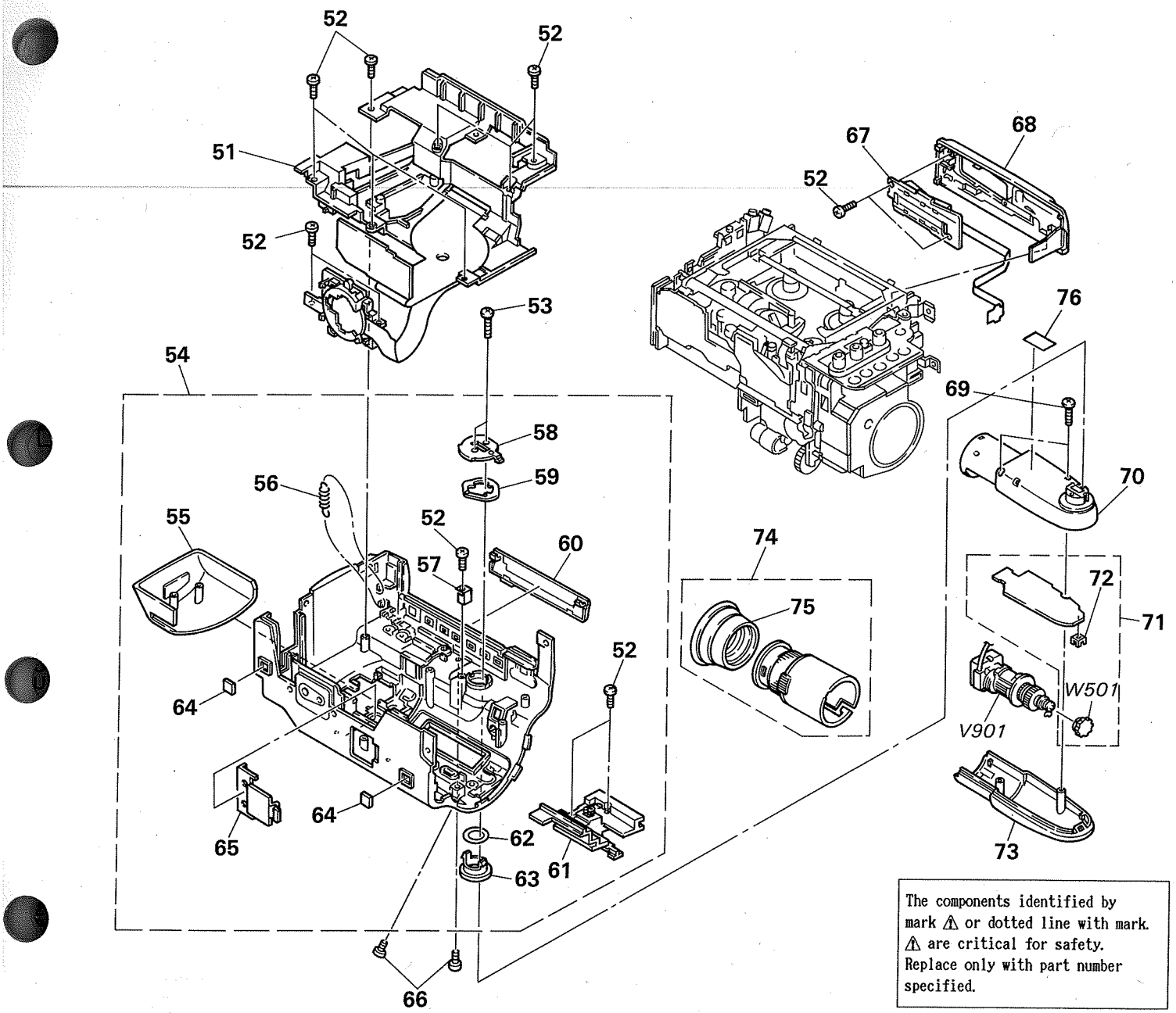

The components identified by mark ⚠ or dotted line with mark. ⚠ are critical for safety. Replace only with part number specified.

Ref. No.	Part No.	Description	Remark
51	1-467-296-11	SWITCH BLOCK, CONTROL	
52	3-719-601-01	SCREW (B2X5), TAPPING	
53	3-740-546-41	SCREW (M2X10)	
54	X-3943-242-1	CABINET (R) ASSY	
55	3-955-285-01	DOOR, CF	
56	3-570-896-00	SPRING, TENSION	
57	3-747-178-01	REINFORCEMENT, TILT LOCK	
58	3-747-111-01	PLATE, LOCK, TILT	
59	3-747-110-01	SPRING, LEAF, TILT	
60	X-3943-240-1	DOOR ASSY, CONTROL	
61	3-955-286-01	SLIDER, CF	
62	3-747-112-01	RING, TILT	
63	3-747-109-01	SLEEVE, EVF	
* 64	3-949-383-01	FOOT, RUBBER	
65	3-955-001-01	LID, LITHIUM BATTERY	
66	3-719-381-01	SCREW (M2X4)	
67	1-692-257-41	SWITCH, PUSH (ZOOM)	
68	X-3941-894-1	LID ASSY, LS	
69	3-713-790-31	SCREW (M2X8), TAPPING, P3	
70	X-3940-706-1	CABINET (L) ASSY, EVF	
71	A-7063-220-A	VF-42 BOARD, COMPLETE	
72	3-942-888-01	HOLDER, LED	
73	3-943-077-01	CABINET (R), EVF	
74	X-3941-603-1	HOLDER ASSY, FINDER	
75	3-946-426-01	EYE CUP	
* 76	3-704-235-01	LABEL, CAUTION (UK)	
⚠ V901	1-452-565-11	CRT ASSY (M01KKD70WB)	
⚠ W501	1-540-019-21	SOCKET ASSY, CRT	

5-3. MAIN BOARDS ASSEMBLY

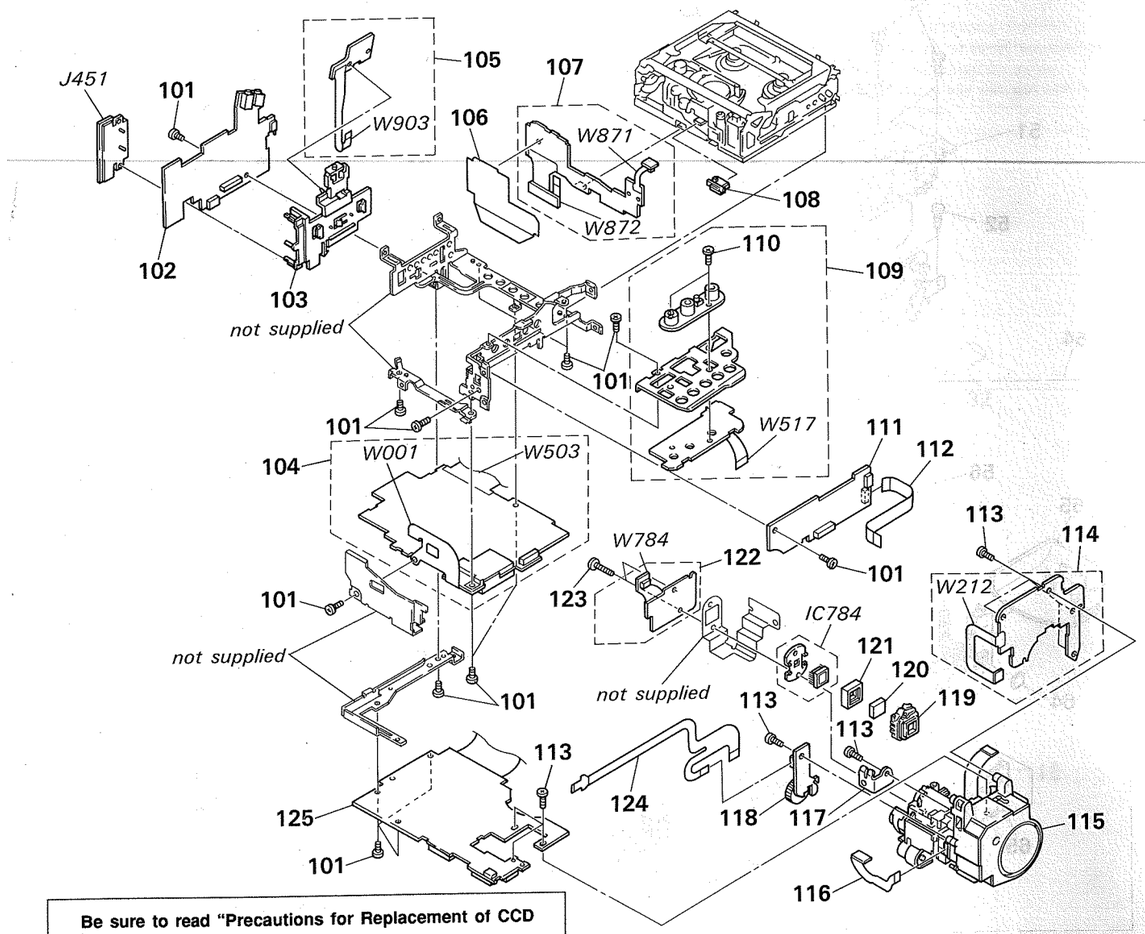

Be sure to read "Precautions for Replacement of CCD Imager" on page 42 when changing the CCD imager.

Ref. No.	Part No.	Description	Remark
101	3-713-786-51	SCREW (M2X3)	
102	A-7063-694-A	DD-55 BOARD, COMPLETE	
* 103	3-955-282-01	HOLDER, SW	
104	A-7063-687-A	VS-99 BOARD, COMPLETE	
105	A-7071-862-A	SW-222 BOARD, COMPLETE	
* 106	3-955-756-01	SHEET, INSULATED TRIPOD	
107	A-7063-693-A	SL-32 BOARD, COMPLETE	
108	1-691-471-11	CONNECTOR, TRANSLATION 11P	
109	A-7063-692-A	JK-98 COM ASSY	
110	3-719-381-01	SCREW (M2X4)	
111	A-7063-695-A	AU-149 BOARD, COMPLETE	
112	1-751-487-11	CORD, FFC-104 FLEXIBLE FLAT	
113	3-719-601-01	SCREW (B2X5), TAPPING	
114	A-7063-691-A	YP-12 BOARD, COMPLETE	
115	1-547-635-11	LENS, ZOOM (VCL-6110WF)	
116	1-537-593-11	FP-17 FLEXIBLE BOARD	
* 117	3-955-287-01	SHEET METAL (A), FIXED	
118	A-7071-863-A	MF-213 BOARD, COMPLETE	

Ref. No.	Part No.	Description	Remark
119	3-946-856-01	ADAPTOR (H), CCD FITTING	
120	1-547-558-21	FILTER BLOCK, OPTICAL	
121	3-946-857-01	RUBBER (S), SEAL	
122	A-7063-690-A	CD-105 BOARD, COMPLETE	
123	3-947-268-01	SCREW (B TIGHT) (2), TAPPING	
124	1-537-589-11	FP-9 FLEXIBLE BOARD	
125	A-7063-688-A	VC-132 BOARD, COMPLETE	
IC784	A-7030-369-A	CCD BLOCK ASSY (055 SERVICE)	
J451	1-537-281-41	TERMINAL BOARD	
W001	1-537-592-11	FP-12 FLEXIBLE BOARD	
W212	1-537-588-11	FP-8 FLEXIBLE BOARD	
W503	1-537-591-11	FP-11 FLEXIBLE BOARD	
W517	1-537-590-11	FP-10 FLEXIBLE BOARD	
W784	1-644-944-11	FP-580 FLEXIBLE BOARD	
W871	1-642-186-11	FP-437 FLEXIBLE BOARD	
W872	1-750-967-11	FP-697 FLEXIBLE BOARD	
W903	1-537-594-11	FP-699 FLEXIBLE BOARD	

5-4. CASSETTE COMPARTMENT HOLDER ASSEMBLY

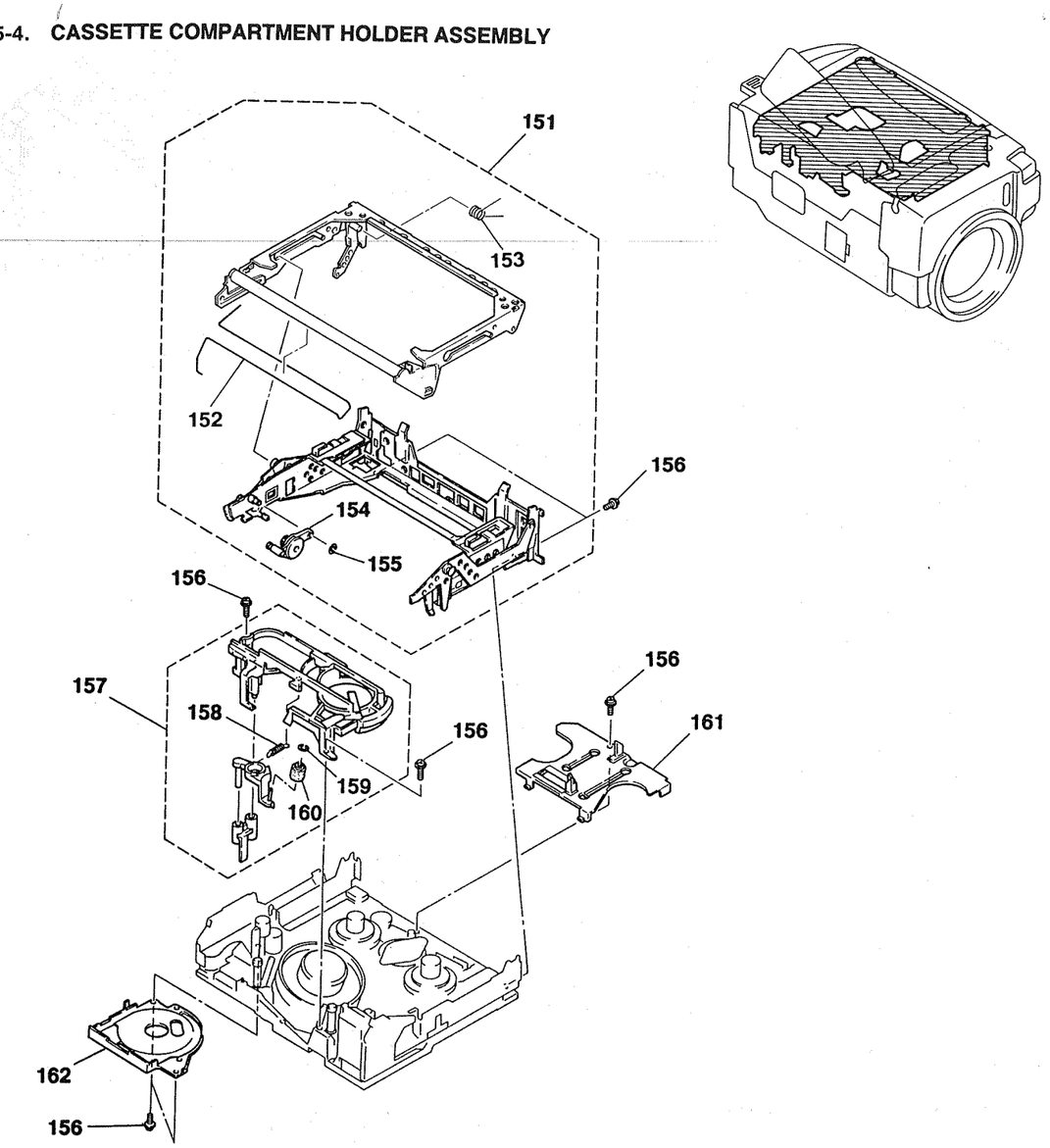

Ref. No.	Part No.	Description	Remark
151	A-7040-312-K	CASSETTE COMPARTMENT BLOCKASSY	
152	3-945-773-01	BAR, TORSION	
153	3-945-771-01	SPRING, TORSION	
154	X-3941-287-2	DAMPER ASSY	
155	3-315-384-31	WASHER, STOPPER	
156	3-947-503-01	SCREW (M1.4X2.5)	
157	A-7040-309-A	PROTECT (BASE) BLOCK ASSY	
158	3-945-760-01	SPRING, TENSION	
159	3-321-393-01	WASHER, STOPPER	
160	X-3166-813-1	ROLLER ASSY, HC	
161	X-3941-280-1	RETAINER ASSY, GOOSENECK	
162	3-945-733-01	COVER, CAPSTAN	

5-5. LS CHASSIS ASSEMBLY

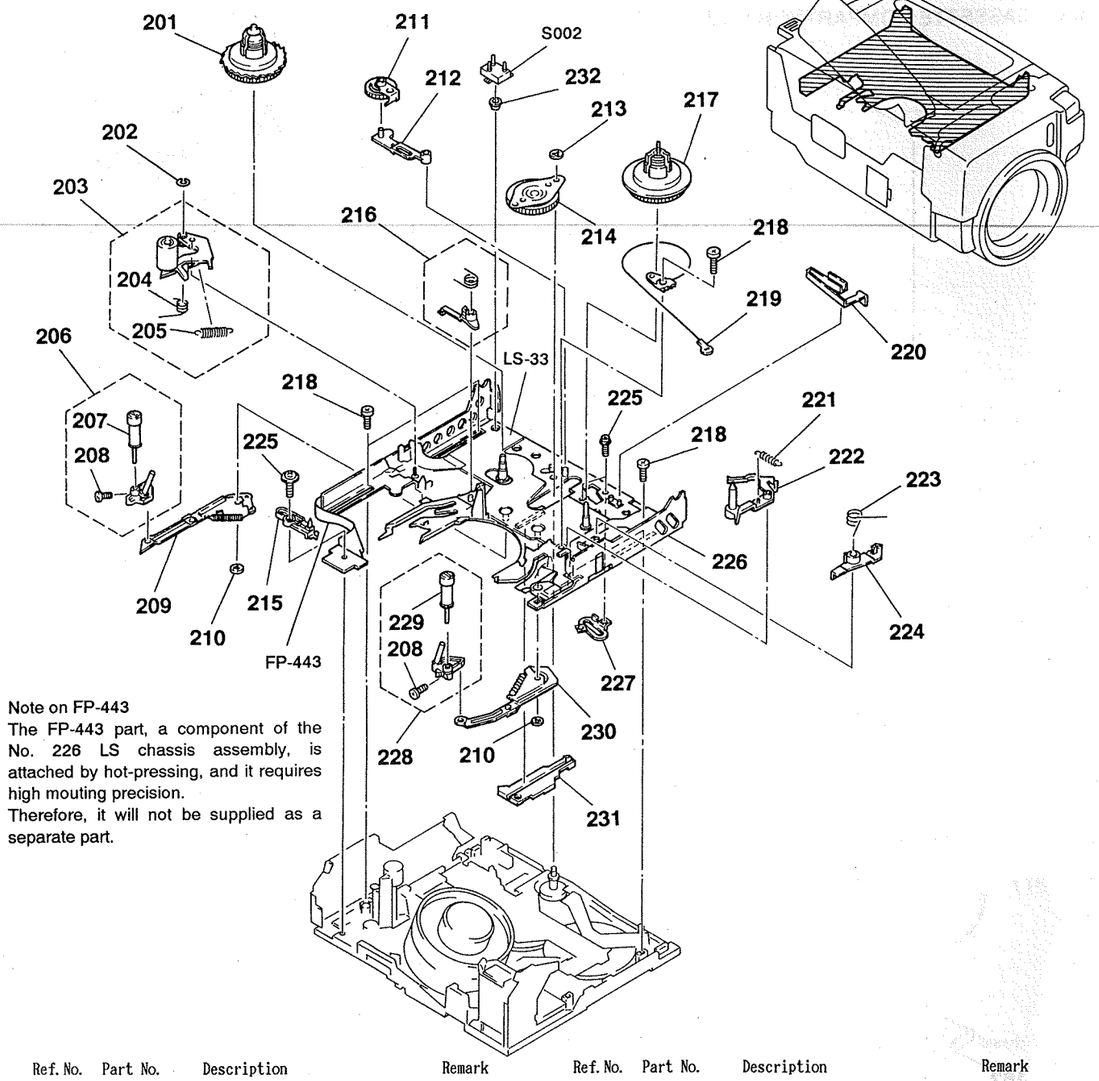

Note on FP-443
The FP-443 part, a component of the No. 226 LS chassis assembly, is attached by hot-pressing, and it requires high mouting precision.
Therefore, it will not be supplied as a separate part.

Ref. No.	Part No.	Description	Remark
201	X-3941-274-1	TABLE ASSY, REEL, T	
202	3-331-007-21	WASHER	
203	X-3941-271-5	ARM ASSY, PINCH	
204	3-945-743-01	SPRING, TORSION	
205	3-945-783-01	SPRING, TENSION	
206	A-7040-307-A	GUIDE (BASE) (T) BLOCK ASSY	
207	X-3941-424-1	ROLLER ASSY, TG6	
208	3-947-504-01	SCREW (M1.2X2)	
209	X-3941-267-1	ARM (T) ASSY, GUIDE	
210	3-669-465-00	WASHER (1.5), STOPPER	
211	X-3941-273-1	SOFT ASSY, T	
212	3-945-753-01	ARM, T SOFT	
213	3-726-829-01	WASHER, STOPPER	
214	X-3941-279-5	GEAR ASSY, GOOSENECK	
215	3-947-644-01	RETAINER, TG5 (BASE)	
216	A-7040-321-A	CLAW BLOCK ASSY, T HARD	
217	X-3941-275-X	TABLE ASSY, REEL, S	
218	3-945-756-01	SCREW (M1.4X3)	
219	X-3941-277-1	STRING BLOCK ASSY	
220	3-945-801-01	BRAKE, S SOFT	
221	3-954-327-01	SPRING, TENSION	
222	X-3941-276-1	TG1 ASSY	
223	3-945-752-01	SPRING, TORSION	
224	3-945-799-01	BRAKE, S HARD	
225	3-947-503-01	SCREW (M1.4X2.5)	
226	X-3943-307-1	CHASSIS ASSY, LS	
227	3-945-784-01	PLATE, CAM, LS	
228	A-7040-306-A	GUIDE (BASE) (S) BLOCK ASSY	
229	X-3941-269-1	ROLLER ASSY, TG3	
230	X-3941-266-1	ARM (S) ASSY, GUIDE	
231	3-945-837-01	SLIDER, GL	
232	3-949-881-01	SLEEVE	
S002	1-572-987-11	SWITCH, PUSH (3 KEY) (REC PROOF, ME/MP, MP/MP-HG)	

5-6. MECHANISM CHASSIS ASSEMBLY (1)

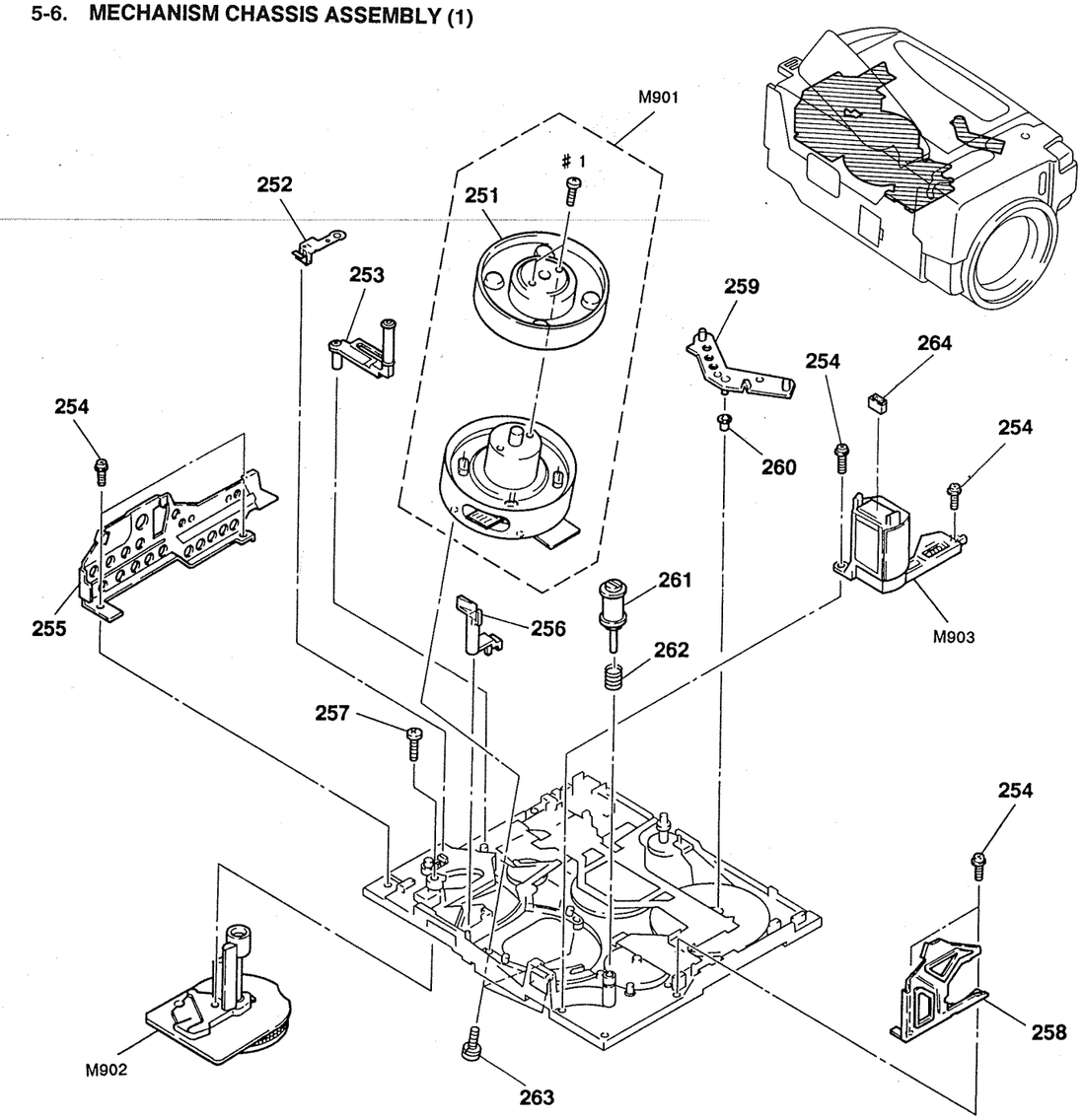

Ref. No.	Part No.	Description	Remark
251	A-7049-521-A	DRUM ASSY, UPPER (DGR-90-R)	
252	3-945-822-01	SPRING, LEAF, TG7 ARM	
253	A-7040-305-A	ARM BLOCK ASSY, TG7	
254	3-947-503-01	SCREW (M1.4X2.5)	
255	X-3941-255-1	PLATE (T) ASSY, SIDE	
256	3-945-735-01	ARM, HC CONVERSION	
257	3-713-786-71	SCREW (M2X5)	
258	3-945-691-01	PLATE (S), SIDE	
259	3-945-701-01	ARM, LS	
260	3-945-702-01	ROLLER, LS	
261	X-3941-262-1	ROLLER ASSY, TG2	
262	3-945-774-01	SPRING, COMPRESSION	
263	3-686-493-01	SCREW (M2X5), P1	
264	1-568-323-11	CONNECTOR, BOARD TO BOARD 4P	
M901	A-7048-585-A	DRUM ASSY (DGH-90A-R)	
M902	8-835-477-01	MOTOR, DC SCE-0101A (CAPSTAN)	
M903	A-7040-304-A	MOTOR BLOCK ASSY, LM (LOADING)	

5-7. MECHANISM CHASSIS ASSEMBLY (2)

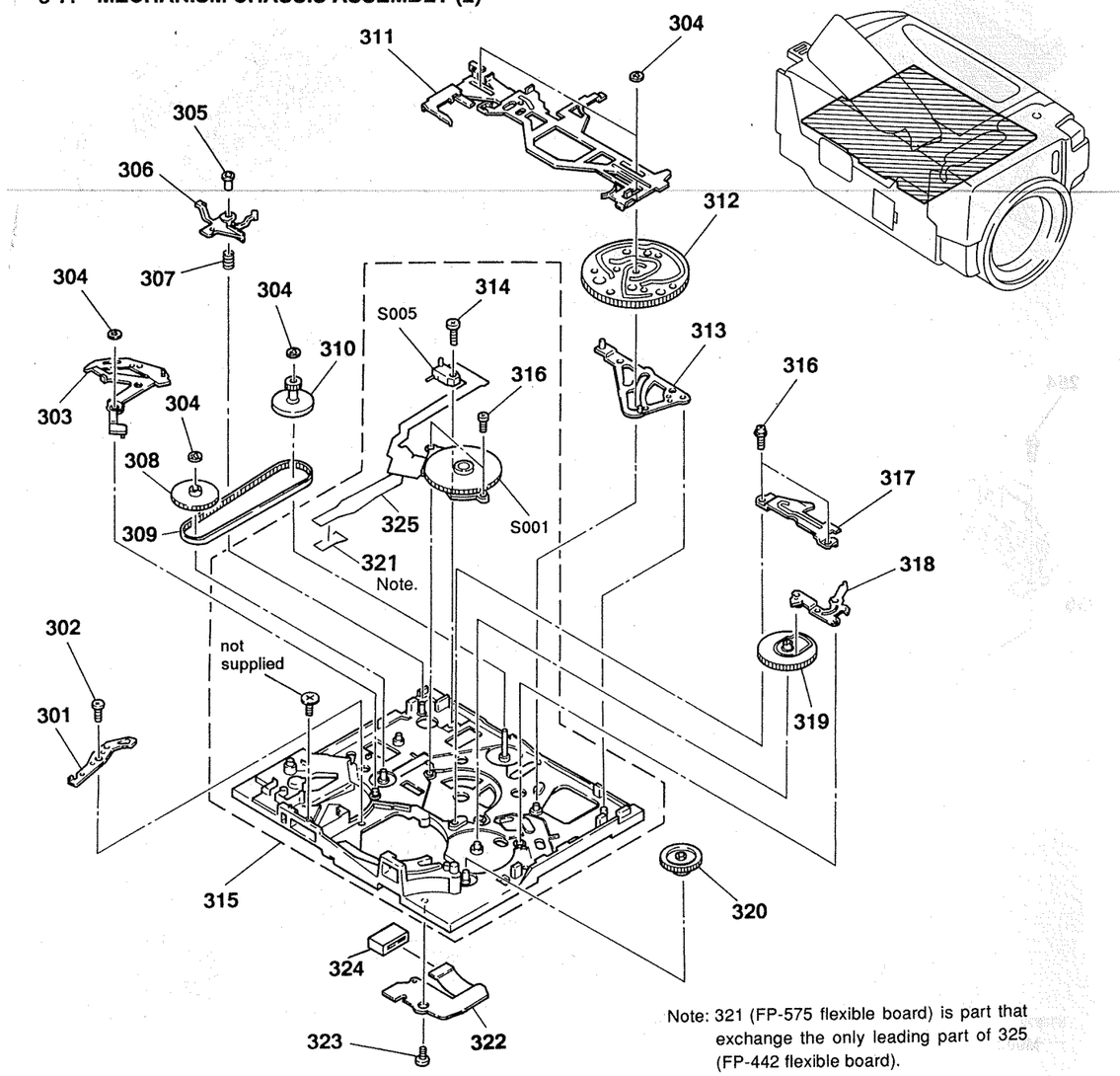

Note: 321 (FP-575 flexible board) is part that exchange the only leading part of 325 (FP-442 flexible board).

Ref. No.	Part No.	Description	Remark
301	3-945-734-01	ARM, HC DRIVING	
302	3-728-103-11	SCREW (M1.4X1.6), SPECIAL HEAD	
303	X-3941-259-1	ARM ASSY, PINCH PRESS	
304	3-726-829-01	WASHER, STOPPER	
305	3-945-730-01	SLEEVE, EJECT	
306	3-945-706-01	LEVER, EJECT	
307	3-945-729-01	SPRING, COMPRESSION	
308	X-3941-256-1	GEAR ASSY, CHANGE	
309	3-944-539-01	BELT, RELAY	
310	3-945-695-01	PULLEY, RELAY	
311	X-3941-260-1	SLIDER ASSY, M	
312	3-945-696-02	CAM	
313	X-3941-258-1	ARM ASSY, GL	
314	3-713-786-71	SCREW (M2X5)	
315	A-7040-303-A	CHASSIS ASSY, MECHANICAL	
316	3-947-503-01	SCREW (M1.4X2.5)	
317	3-945-722-01	RETAINER, GEAR	
318	X-3941-257-1	ARM ASSY, FF	
319	3-945-697-01	GEAR (B), L	
320	3-945-700-01	GEAR (A), L	
321	1-645-271-11	FP-575 FLEXIBLE BOARD	
322	1-641-643-12	FP-444 FLEXIBLE BOARD	
323	3-945-756-01	SCREW (M1.4X3)	
324	1-691-254-13	CONNECTOR, TRANSLATION 10P	
325	1-641-639-13	FP-442 FLEXIBLE BOARD	
S001	1-572-986-11	SWITCH, ROTARY (ENCODER)	
S005	1-570-771-21	SWITCH (C DOWN)	

5-8. ZOOM LENS ASSEMBLY (VCL-6110WF)

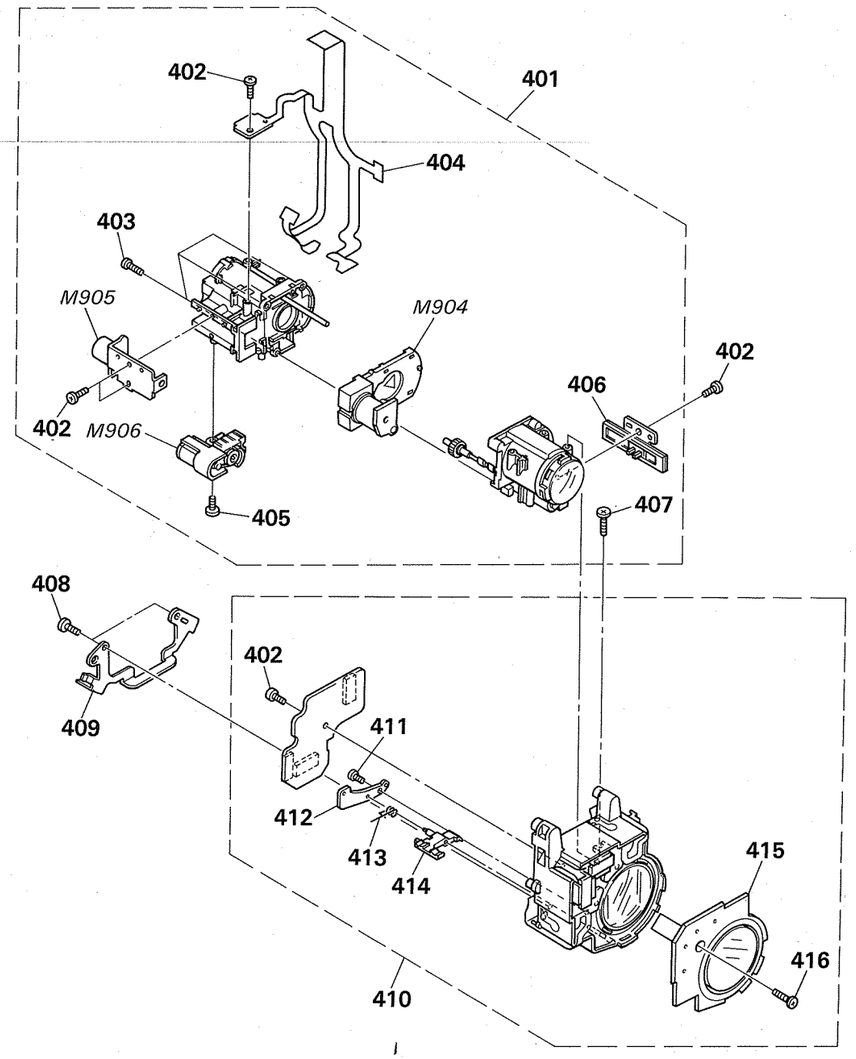

Ref. No.	Part No.	Description	Remark
401	3-708-805-01	LENS BLOCK	
402	3-708-302-01	SCREW P1.7X4	
403	3-708-799-01	SCREW P1.7X5.5	
404	3-708-790-01	FPC, MAIN	
405	3-708-449-01	SCREW P1.7X5	
406	3-708-791-01	ENCORDER, ZOOM	
407	3-708-798-01	SCREW P1.7X5	
408	3-708-797-01	SCREW P2X4	
409	3-708-789-01	BRACKET	
410	A-7030-482-A	VAP BLOCK	
411	3-708-804-01	SCREW P1.7X3.5	
412	3-708-803-01	PLATE, LOCK	
413	3-708-802-01	SPRING, LOCK	
414	3-708-801-01	LEVER, LOCK	
415	3-708-787-01	RING, F	
416	3-708-795-01	SCREW P2X7	
M904	3-708-792-01	METER, IG(IRIS)	
M905	3-708-793-01	MOTOR, STEPPING (FOCUS)	
M906	3-708-794-01	MOTOR, PZ (ZOOM)	

SECTION 6
ELECTRICAL PARTS LIST

NOTE:
- Due to standardization, replacements in the parts list may be different from the parts specified in the diagrams or the components used on the set.
- -XX and -X mean standardized parts, so they may have some difference from the original one.
- RESISTORS
  All resistors are in ohms.
  METAL:Metal-film resistor.
  METAL OXIDE: Metal oxide-film resistor.
  F:nonflammable
- Items marked "*" are not stocked since they are seldom required for routine service. Some delay should be anticipated when ordering these items.
- SEMICONDUCTORS
  In each case, u:μ, for example:
  uA..: μA.. uPA..: μPA..
  uPB..: μPB.. uPC..: μPC.. uPD..: μPD..
- CAPACITORS
  uF: μF
- COILS
  uH: μH

The components identified by mark ⚠ or dotted line with mark ⚠ are critical for safety. Replace only with part number specified.

When indicating parts by reference number, please include the board.

Ref. No.	Part No.	Description			Remark
	A-7063-695-A	AU-149 BOARD, COMPLETE			
		**********			
		(Ref. No. 7,000 Series)			
		< CAPACITOR >			
C801	1-162-953-11	CERAMIC CHIP	100PF	5%	50V
C802	1-162-953-11	CERAMIC CHIP	100PF	5%	50V
C803	1-162-953-11	CERAMIC CHIP	100PF	5%	50V
C804	1-104-753-11	TANTAL. CHIP	47uF	20%	6.3V
C805	1-126-205-11	ELECT CHIP	47uF	20%	6.3V
C806	1-104-753-11	TANTAL. CHIP	47uF	20%	6.3V
C807	1-126-205-11	ELECT CHIP	47uF	20%	6.3V
C808	1-135-181-21	TANTALUM CHIP	4.7uF	20%	6.3V
C809	1-126-205-11	ELECT CHIP	47uF	20%	6.3V
C811	1-126-205-11	ELECT CHIP	47uF	20%	6.3V
C812	1-164-489-11	CERAMIC CHIP	0.22uF	10%	16V
C813	1-135-181-21	TANTALUM CHIP	4.7uF	20%	6.3V
C814	1-164-489-11	CERAMIC CHIP	0.22uF	10%	16V
C820	1-124-778-00	ELECT CHIP	22uF	20%	6.3V
C821	1-135-181-21	TANTALUM CHIP	4.7uF	20%	6.3V
C822	1-164-489-11	CERAMIC CHIP	0.22uF	10%	16V
C824	1-164-489-11	CERAMIC CHIP	0.22uF	10%	16V
C825	1-135-181-21	TANTALUM CHIP	4.7uF	20%	6.3V
C826	1-135-091-91	TANTAL. CHIP	1uF	20%	16V
C827	1-135-259-11	TANTAL. CHIP	10uF	20%	6.3V
C828	1-135-181-21	TANTALUM CHIP	4.7uF	20%	6.3V
C829	1-162-966-11	CERAMIC CHIP	0.0022uF	10%	50V
C830	1-135-181-21	TANTALUM CHIP	4.7uF	20%	6.3V
C832	1-162-966-11	CERAMIC CHIP	0.0022uF	10%	50V
C833	1-163-809-11	CERAMIC CHIP	0.047uF	10%	25V
C834	1-164-346-11	CERAMIC CHIP	1uF	10%	16V
C835	1-162-967-11	CERAMIC CHIP	0.0033uF	10%	50V
C838	1-164-004-11	CERAMIC CHIP	0.1uF	10%	25V
C840	1-164-004-11	CERAMIC CHIP	0.1uF	10%	25V
C841	1-162-970-11	CERAMIC CHIP	0.01uF	10%	25V
C842	1-164-004-11	CERAMIC CHIP	0.1uF	10%	25V
C843	1-164-004-11	CERAMIC CHIP	0.1uF	10%	25V
C844	1-164-004-11	CERAMIC CHIP	0.1uF	10%	25V
C845	1-162-966-11	CERAMIC CHIP	0.0022uF	10%	50V
C847	1-135-181-21	TANTALUM CHIP	4.7uF	20%	6.3V
C848	1-162-966-11	CERAMIC CHIP	0.0022uF	10%	50V
C849	1-135-181-21	TANTALUM CHIP	4.7uF	20%	6.3V
C850	1-135-259-11	TANTAL. CHIP	10uF	20%	6.3V
C851	1-135-091-91	TANTAL. CHIP	1uF	20%	16V
C852	1-135-181-21	TANTALUM CHIP	4.7uF	20%	6.3V
C853	1-135-181-21	TANTALUM CHIP	4.7uF	20%	6.3V
C855	1-128-003-11	ELECT CHIP	22uF	20%	4V
C856	1-128-003-11	ELECT CHIP	22uF	20%	4V
C857	1-162-969-11	CERAMIC CHIP	0.0068uF	10%	25V
C858	1-162-970-11	CERAMIC CHIP	0.01uF	10%	25V
C859	1-164-004-11	CERAMIC CHIP	0.1uF	10%	25V
C860	1-162-970-11	CERAMIC CHIP	0.01uF	10%	25V
C864	1-162-970-11	CERAMIC CHIP	0.01uF	10%	25V
C865	1-162-970-11	CERAMIC CHIP	0.01uF	10%	25V
C870	1-164-145-11	CERAMIC CHIP	390PF	5%	50V
C891	1-135-259-11	TANTAL. CHIP	10uF	20%	6.3V
		< CONNECTOR >			
CN801	1-691-492-21	CONNECTOR, FFC/FPC 13P			
* CN802	1-691-931-11	CONNECTOR, BOARD TO BOARD 38P			
CN803	1-566-537-11	CONNECTOR, FPC (NON ZIF) 5P			
		< DIODE >			
D801	8-719-404-46	DIODE	MA110		
D805	8-719-404-35	DIODE	MA141WK		
D806	8-719-404-35	DIODE	MA141WK		
D808	8-719-420-15	DIODE	MA8082-M(TX)		
D809	8-719-420-15	DIODE	MA8082-M(TX)		
D810	8-719-404-46	DIODE	MA110		
		< FILTER >			
FL801	1-236-837-21	FILTER, BAND PASS			
FL802	1-236-838-21	FILTER, BAND PASS			
		< IC >			
IC801	8-759-159-94	IC LA7491W-TBM			

Ref. No.	Part No.	Description			Remark
		< TRANSISTOR >			
Q801	8-729-230-63	TRANSISTOR	2SC4116-YG		
Q802	8-729-230-63	TRANSISTOR	2SC4116-YG		
Q803	8-729-230-63	TRANSISTOR	2SC4116-YG		
Q804	8-729-230-63	TRANSISTOR	2SC4116-YG		
Q806	8-729-402-42	TRANSISTOR	UN5213		
Q807	8-729-230-63	TRANSISTOR	2SC4116-YG		
Q808	8-729-420-50	TRANSISTOR	UN5215		
Q810	8-729-230-63	TRANSISTOR	2SC4116-YG		
Q811	8-729-230-63	TRANSISTOR	2SC4116-YG		
Q812	8-729-402-81	TRANSISTOR	XN4501		
Q813	8-729-402-81	TRANSISTOR	XN4501		
Q820	8-729-402-42	TRANSISTOR	UN5213		
Q821	8-729-402-42	TRANSISTOR	UN5213		
Q823	8-729-420-24	TRANSISTOR	2SB1218A-QRS		
		< RESISTOR >			
R417	1-216-817-11	METAL CHIP	470	5%	1/16W
R436	1-216-817-11	METAL CHIP	470	5%	1/16W
R437	1-216-833-11	METAL CHIP	10K	5%	1/16W
R801	1-216-824-11	METAL CHIP	1.8K	5%	1/16W
R802	1-216-842-11	METAL CHIP	56K	5%	1/16W
R803	1-216-810-11	METAL CHIP	120	5%	1/16W
R805	1-216-810-11	METAL CHIP	120	5%	1/16W
R807	1-216-817-11	METAL CHIP	470	5%	1/16W
R809	1-216-817-11	METAL CHIP	470	5%	1/16W
R811	1-216-839-11	METAL CHIP	33K	5%	1/16W
R812	1-216-824-11	METAL CHIP	1.8K	5%	1/16W
R813	1-216-842-11	METAL CHIP	56K	5%	1/16W
R814	1-216-833-11	METAL CHIP	10K	5%	1/16W
R815	1-216-839-11	METAL CHIP	33K	5%	1/16W
R816	1-216-833-11	METAL CHIP	10K	5%	1/16W
R817	1-216-823-11	METAL CHIP	1.5K	5%	1/16W
R819	1-216-821-11	METAL CHIP	1K	5%	1/16W
R820	1-216-863-11	METAL GLAZE	3.3M	5%	1/16W
R821	1-216-833-11	METAL CHIP	10K	5%	1/16W
R823	1-216-863-11	METAL GLAZE	3.3M	5%	1/16W
R824	1-216-841-11	METAL CHIP	47K	5%	1/16W
R825	1-218-732-11	METAL CHIP	47K	0.50%	1/16W
R826	1-218-722-11	METAL CHIP	18K	0.50%	1/16W
R827	1-216-839-11	METAL CHIP	33K	5%	1/16W
R828	1-216-833-11	METAL CHIP	10K	5%	1/16W
R829	1-216-841-11	METAL CHIP	47K	5%	1/16W
R831	1-216-864-11	METAL CHIP	0	5%	1/16W
R832	1-216-833-11	METAL CHIP	10K	5%	1/16W
R833	1-216-864-11	METAL CHIP	0	5%	1/16W
R834	1-216-833-11	METAL CHIP	10K	5%	1/16W
R835	1-216-821-11	METAL CHIP	1K	5%	1/16W
R836	1-216-821-11	METAL CHIP	1K	5%	1/16W
R837	1-216-821-11	METAL CHIP	1K	5%	1/16W
R838	1-216-821-11	METAL CHIP	1K	5%	1/16W
R839	1-216-830-11	METAL CHIP	5.6K	5%	1/16W
R840	1-216-836-11	METAL CHIP	18K	5%	1/16W
R841	1-216-837-11	METAL CHIP	22K	5%	1/16W
R842	1-216-825-11	METAL CHIP	2.2K	5%	1/16W
R843	1-216-829-11	METAL CHIP	4.7K	5%	1/16W
R844	1-216-823-11	METAL CHIP	1.5K	5%	1/16W
R845	1-216-827-11	METAL CHIP	3.3K	5%	1/16W
R846	1-216-822-11	METAL CHIP	1.2K	5%	1/16W
R847	1-216-827-11	METAL CHIP	3.3K	5%	1/16W
R848	1-216-825-11	METAL CHIP	2.2K	5%	1/16W
R849	1-216-829-11	METAL CHIP	4.7K	5%	1/16W
R850	1-216-824-11	METAL CHIP	1.8K	5%	1/16W
R851	1-216-829-11	METAL CHIP	4.7K	5%	1/16W
R852	1-216-824-11	METAL CHIP	1.8K	5%	1/16W
R853	1-216-820-11	METAL CHIP	820	5%	1/16W
R859	1-216-833-11	METAL CHIP	10K	5%	1/16W
R860	1-216-831-11	METAL CHIP	6.8K	5%	1/16W
R862	1-216-829-11	METAL CHIP	4.7K	5%	1/16W
R863	1-216-838-11	METAL CHIP	27K	5%	1/16W
R864	1-216-838-11	METAL CHIP	27K	5%	1/16W
R881	1-216-864-11	METAL CHIP	0	5%	1/16W
R882	1-216-841-11	METAL CHIP	47K	5%	1/16W
R883	1-216-841-11	METAL CHIP	47K	5%	1/16W
R885	1-216-832-11	METAL CHIP	8.2K	5%	1/16W
R886	1-216-847-11	METAL CHIP	150K	5%	1/16W
R890	1-216-864-11	METAL CHIP	0	5%	1/16W
R891	1-216-821-11	METAL CHIP	1K	5%	1/16W
		**********			
	A-7063-690-A	CD-105 BOARD, COMPLETE			
		**********			
		(Ref. No. 1,000 Series)			
		< CAPACITOR >			
C784	1-128-004-11	ELECT CHIP	10uF	20%	16V
C785	1-128-013-11	ELECT CHIP	1uF	20%	50V
C786	1-162-964-11	CERAMIC CHIP	0.001uF	10%	50V
C787	1-126-607-11	ELECT CHIP	47uF	20%	4V
C788	1-162-974-11	CERAMIC CHIP	0.01uF		50V
C789	1-162-637-11	CERAMIC CHIP	0.47uF		16V
C790	1-135-214-21	TANTAL. CHIP	4.7uF	20%	20V
		< DIODE >			
D784	8-719-404-46	DIODE	MA110		

Ref. No.	Part No.	Description			Remark
		< COIL >			
L784	1-412-032-11	INDUCTOR CHIP 100uH			
		< TRANSISTOR >			
Q784	8-729-232-86	TRANSISTOR 2SK1875			
Q785	8-729-102-07	TRANSISTOR 2SC2223-F13			
		< RESISTOR >			
R784	1-216-839-11	METAL CHIP	33K	5%	1/16W
R785	1-216-819-11	METAL CHIP	680	5%	1/16W
R786	1-216-849-11	METAL CHIP	220K	5%	1/16W
R787	1-216-833-11	METAL CHIP	10K	5%	1/16W
R788	1-216-829-11	METAL CHIP	4.7K	5%	1/16W
R789	1-216-809-11	METAL CHIP	100	5%	1/16W
R790	1-216-845-11	METAL CHIP	100K	5%	1/16W
R791	1-216-857-11	METAL CHIP	1M	5%	1/16W
		< FLAT CABLE >			
W784	1-644-944-11	FP-580 FLEXIBLE BOARD			

****

⚠ A-7063-694-A DD-55 BOARD, COMPLETE

****

(Ref. No. 9,000 Series)

Ref. No.	Part No.	Description			Remark
		< CAPACITOR >			
C445	1-104-913-11	TANTAL. CHIP	10uF	20%	16V
C446	1-162-953-11	CERAMIC CHIP	100PF	5%	50V
C448	1-135-157-21	TANTALUM CHIP	10uF	20%	6.3V
C449	1-162-970-11	CERAMIC CHIP	0.01uF	10%	25V
C450	1-162-964-11	CERAMIC CHIP	0.001uF	10%	50V
C451	1-162-964-11	CERAMIC CHIP	0.001uF	10%	50V
C452	1-162-964-11	CERAMIC CHIP	0.001uF	10%	50V
C453	1-135-165-11	TANTAL. CHIP	33uF	20%	16V
C454	1-126-204-11	ELECT CHIP	47uF	20%	16V
C455	1-126-204-11	ELECT CHIP	47uF	20%	16V
C456	1-163-133-00	CERAMIC CHIP	470PF	5%	50V
C457	1-164-004-11	CERAMIC CHIP	0.1uF	10%	25V
C458	1-164-004-11	CERAMIC CHIP	0.1uF	10%	25V
C459	1-164-004-11	CERAMIC CHIP	0.1uF	10%	25V
C460	1-164-004-11	CERAMIC CHIP	0.1uF	10%	25V
C461	1-164-004-11	CERAMIC CHIP	0.1uF	10%	25V
C462	1-162-966-11	CERAMIC CHIP	0.0022uF	10%	50V
C463	1-162-967-11	CERAMIC CHIP	0.0033uF	10%	50V
C464	1-163-017-00	CERAMIC CHIP	0.0047uF	5%	50V
C465	1-164-161-11	CERAMIC CHIP	0.0022uF	10%	100V
C466	1-164-174-11	CERAMIC CHIP	0.0082uF	10%	25V
C467	1-164-730-11	CERAMIC CHIP	0.0012uF	10%	50V
C468	1-162-953-11	CERAMIC CHIP	100PF	5%	50V
C469	1-162-953-11	CERAMIC CHIP	100PF	5%	50V
C470	1-164-004-11	CERAMIC CHIP	0.1uF	10%	25V
C471	1-162-962-11	CERAMIC CHIP	470PF	10%	50V
C472	1-162-962-11	CERAMIC CHIP	470PF	10%	50V
C473	1-162-958-11	CERAMIC CHIP	270PF	5%	50V
C474	1-162-958-11	CERAMIC CHIP	270PF	5%	50V
C475	1-162-962-11	CERAMIC CHIP	470PF	10%	50V
C476	1-162-964-11	CERAMIC CHIP	0.001uF	10%	50V
C477	1-162-963-11	CERAMIC CHIP	680PF	10%	50V
C478	1-162-963-11	CERAMIC CHIP	680PF	10%	50V
C479	1-162-962-11	CERAMIC CHIP	470PF	10%	50V
C480	1-162-963-11	CERAMIC CHIP	680PF	10%	50V
C481	1-165-178-11	CERAMIC CHIP	6.8uF		16V
C482	1-165-178-11	CERAMIC CHIP	6.8uF		16V
C483	1-165-178-11	CERAMIC CHIP	6.8uF		16V
C484	1-165-176-11	CERAMIC CHIP	0.047uF	10%	16V
C485	1-165-178-11	CERAMIC CHIP	6.8uF		16V
C486	1-165-178-11	CERAMIC CHIP	6.8uF		16V
C487	1-165-178-11	CERAMIC CHIP	6.8uF		16V
C488	1-165-178-11	CERAMIC CHIP	6.8uF		16V
C489	1-165-178-11	CERAMIC CHIP	6.8uF		16V
C490	1-164-506-11	CERAMIC CHIP	4.7uF		16V
C491	1-164-830-11	CERAMIC CHIP	1uF	22%	16V
C492	1-164-337-11	CERAMIC CHIP	2.2uF		16V
C493	1-164-337-11	CERAMIC CHIP	2.2uF		16V
C494	1-135-157-21	TANTALUM CHIP	10uF	20%	6.3V
C495	1-135-157-21	TANTALUM CHIP	10uF	20%	6.3V
C496	1-135-157-21	TANTALUM CHIP	10uF	20%	6.3V
C497	1-135-157-21	TANTALUM CHIP	10uF	20%	6.3V
C498	1-135-157-21	TANTALUM CHIP	10uF	20%	6.3V
C499	1-135-157-21	TANTALUM CHIP	10uF	20%	6.3V
		< CONNECTOR >			
CN451	1-691-521-11	CONNECTOR, BOARD TO BOARD 40P			
CN452	1-691-485-21	CONNECTOR, FFC/FPC 6P			
		< DIODE >			
D450	8-719-016-74	DIODE 1SS352			
D451	8-719-420-15	DIODE MA8082-M(TX)			
D452	8-719-420-15	DIODE MA8082-M(TX)			
D453	8-719-420-15	DIODE MA8082-M(TX)			
D454	8-719-420-15	DIODE MA8082-M(TX)			
D455	8-719-027-77	DIODE MA796			
D460	8-719-016-74	DIODE 1SS352			
		< IC >			
IC450	8-759-060-94	IC MB3785APFV-G-BND-ER			

The components identified by mark ⚠ or dotted line with mark. ⚠ are critical for safety. Replace only with part number specified.

Ref. No.	Part No.	Description			Remark
IC451	8-759-062-00	IC MB3788PFV			
		< JACK >			
J450	1-569-809-11	JACK (SMALL TYPE) (HEADPHONE)			
J451	1-537-281-41	TERMINAL BOARD (BATTERY TERMINAL)			
J452	1-565-276-21	JACK, ULTRA SMALL 1P (REMOTE)			
		< COIL >			
L450	1-410-192-51	INDUCTOR CHIP 1uH			
L451	1-410-192-51	INDUCTOR CHIP 1uH			
L452	1-410-192-51	INDUCTOR CHIP 1uH			
L456	1-406-864-21	COIL, CHOKE 4.7uH			
L457	1-424-643-11	COIL, CHOKE 10uH			
L458	1-424-641-11	COIL, CHOKE 22uH			
L459	1-424-643-11	COIL, CHOKE 10uH			
L460	1-424-641-11	COIL, CHOKE 22uH			
L461	1-424-642-11	COIL, CHOKE 47uH			
L462	1-424-641-11	COIL, CHOKE 22uH			
L463	1-424-641-11	COIL, CHOKE 22uH			
L464	1-412-056-11	INDUCTOR CHIP 4.7uH			
L465	1-412-054-21	INDUCTOR CHIP 2.2uH			
L466	1-412-054-21	INDUCTOR CHIP 2.2uH			
L467	1-412-066-21	INDUCTOR CHIP 220uH			
L468	1-412-066-21	INDUCTOR CHIP 220uH			
L469	1-412-054-21	INDUCTOR CHIP 2.2uH			
L470	1-412-056-11	INDUCTOR CHIP 4.7uH			
L471	1-412-056-11	INDUCTOR CHIP 4.7uH			
L472	1-412-054-21	INDUCTOR CHIP 2.2uH			
		< IC LINK >			
⚠PS450	1-533-284-11	LINK, CHIP IC (1.6A)			
⚠PS451	1-533-284-11	LINK, CHIP IC (1.6A)			
⚠PS452	1-533-284-11	LINK, CHIP IC (1.6A)			
		< TRANSISTOR >			
Q450	8-729-420-24	TRANSISTOR 2SB1218A-QRS			
Q451	8-729-823-82	TRANSISTOR FP101			
Q452	8-729-823-82	TRANSISTOR FP101			
Q453	8-729-804-41	TRANSISTOR 2SB1122-S			
Q454	8-729-823-84	TRANSISTOR FP102			
Q455	8-729-823-82	TRANSISTOR FP101			
Q456	8-729-823-84	TRANSISTOR FP102			
Q457	8-729-017-10	TRANSISTOR 2SJ244JY			
Q458	8-729-403-35	TRANSISTOR UN5113			
Q459	8-729-420-24	TRANSISTOR 2SB1218A-QRS			
		< RESISTOR >			
R066	1-216-837-11	METAL CHIP	22K	5%	1/16W
R067	1-218-707-11	METAL CHIP	4.3K	0.50%	1/16W
R068	1-216-842-11	METAL CHIP	56K	5%	1/16W
R069	1-216-837-11	METAL CHIP	22K	5%	1/16W
R111	1-216-841-11	METAL CHIP	47K	5%	1/16W
R112	1-216-833-11	METAL CHIP	10K	5%	1/16W
R113	1-216-841-11	METAL CHIP	47K	5%	1/16W
R114	1-218-721-11	METAL CHIP	16K	0.50%	1/16W
R115	1-216-834-11	METAL CHIP	12K	5%	1/16W
R116	1-218-714-11	METAL CHIP	8.2K	0.50%	1/16W
R117	1-218-736-11	METAL CHIP	68K	0.50%	1/16W
R118	1-218-720-11	METAL CHIP	15K	0.50%	1/16W
R119	1-216-843-11	METAL CHIP	68K	5%	1/16W
R227	1-216-843-11	METAL CHIP	68K	5%	1/16W
R228	1-216-804-11	METAL CHIP	39	5%	1/16W
R229	1-216-832-11	METAL CHIP	8.2K	5%	1/16W
R484	1-216-041-00	METAL CHIP	470	5%	1/10W
R485	1-216-845-11	METAL CHIP	100K	5%	1/16W
R486	1-216-055-00	METAL CHIP	1.8K	5%	1/10W
R487	1-216-041-00	METAL CHIP	470	5%	1/10W
R488	1-216-041-00	METAL CHIP	470	5%	1/10W
R489	1-216-041-00	METAL CHIP	470	5%	1/10W
R490	1-216-821-11	METAL CHIP	1K	5%	1/16W
R491	1-216-009-00	METAL CHIP	22	5%	1/10W
R492	1-216-845-11	METAL CHIP	100K	5%	1/16W
R493	1-216-821-11	METAL CHIP	1K	5%	1/16W
R494	1-216-841-11	METAL CHIP	47K	5%	1/16W
R495	1-216-828-11	METAL CHIP	3.9K	5%	1/16W
R496	1-216-296-00	METAL CHIP	0	5%	1/8W
R497	1-216-296-00	METAL CHIP	0	5%	1/8W
R498	1-216-296-00	METAL CHIP	0	5%	1/8W
R862	1-216-830-11	METAL CHIP	5.6K	5%	1/16W
R863	1-216-845-11	METAL CHIP	100K	5%	1/16W
R864	1-216-847-11	METAL CHIP	150K	5%	1/16W
R865	1-218-724-11	METAL CHIP	22K	0.50%	1/16W
R866	1-218-720-11	METAL CHIP	15K	0.50%	1/16W
R867	1-216-834-11	METAL CHIP	12K	5%	1/16W
R868	1-218-727-11	METAL CHIP	30K	0.50%	1/16W
R869	1-216-843-11	METAL CHIP	68K	5%	1/16W
R870	1-216-843-11	METAL CHIP	68K	5%	1/16W
R885	1-216-795-11	METAL CHIP	6.8K	0.50%	1/16W
R886	1-216-832-11	METAL CHIP	8.2K	5%	1/16W
R887	1-216-832-11	METAL CHIP	8.2K	5%	1/16W
R888	1-216-833-11	METAL CHIP	10K	5%	1/16W
R889	1-218-722-11	METAL CHIP	18K	0.50%	1/16W
R890	1-216-833-11	METAL CHIP	10K	5%	1/16W
R891	1-216-864-11	METAL CHIP	0	5%	1/16W
R892	1-216-826-11	METAL CHIP	2.7K	5%	1/16W
R893	1-216-041-00	METAL CHIP	470	5%	1/10W

The components identified by mark ⚠ or dotted line with mark. ⚠ are critical for safety. Replace only with part number specified.

Ref. No.	Part No.	Description	Remark
		< SWITCH >	
S451	1-572-467-21	SWITCH, PUSH (1 KEY) (EJECT)	
		< TRANSFORMER >	
T450	1-423-820-21	TRANSFORMER, CONVERTER	

****

JK-98 BOARD (Ref. No. 4,000 Series)
****

Ref. No.	Part No.	Description	Remark
		< CAPACITOR >	
C517	1-164-361-11	CERAMIC CHIP 0.047uF	16V
		< DIODE >	
D517	8-719-420-15	DIODE MA8082-M(TX)	
D518	8-719-420-15	DIODE MA8082-M(TX)	
D519	8-719-420-15	DIODE MA8082-M(TX)	
D520	8-719-420-15	DIODE MA8082-M(TX)	
D521	8-719-420-15	DIODE MA8082-M(TX)	
D522	8-719-420-15	DIODE MA8082-M(TX)	
D523	8-719-420-15	DIODE MA8082-M(TX)	
D524	8-719-404-46	DIODE MA110	
D525	8-719-404-46	DIODE MA110	
D526	8-719-404-46	DIODE MA110	
		< JACK >	
J517	1-537-415-11	TERMINAL BOARD (VIDEO, AUDIO L/R, RFU DC OUT)	
		< TRANSISTOR >	
Q517	8-729-420-24	TRANSISTOR 2SB1218A-QRS	
		< RESISTOR >	
R518	1-216-853-11	METAL CHIP 470K 5%	1/16W
R519	1-216-841-11	METAL CHIP 47K 5%	1/16W
R520	1-216-853-11	METAL CHIP 470K 5%	1/16W
R521	1-216-864-11	METAL CHIP 0 5%	1/16W
R522	1-216-864-11	METAL CHIP 0 5%	1/16W
R523	1-216-296-00	METAL CHIP 0 5%	1/8W
		< FLAT CABLE >	
W517	1-537-590-11	FP-10 FLEXIBLE BOARD	

****

LS-33 BOARD (Ref. No. 5,000 Series)
****

Ref. No.	Part No.	Description	Remark
		< DIODE >	
D001	8-719-989-52	DIODE GL4600S	
		< HOLE ELEMENT >	
H001	8-719-987-62	DIODE LT140SAZ	
H002	8-719-987-62	DIODE LT140SAZ	
		< TRANSISTOR >	
Q001	8-729-012-46	TRANSISTOR PT4600FS	
Q002	8-729-012-46	TRANSISTOR PT4600FS	
		< RESISTOR >	
R003	1-216-033-00	METAL CHIP 220 5%	1/10W
R004	1-216-033-00	METAL CHIP 220 5%	1/10W
R010	1-216-033-00	METAL CHIP 220 5%	1/10W
R011	1-216-033-00	METAL CHIP 220 5%	1/10W
		< SWITCH >	
S002	1-572-987-11	SWITCH, PUSH (3 KEY) (REC PROOF, ME/MP, MP/MP-HG)	

****

A-7063-696-A MA-169 BOARD, COMPLETE
****
(Ref. No. 7,000 Series)

Ref. No.	Part No.	Description	Remark
		< CAPACITOR >	
C553	1-162-953-11	CERAMIC CHIP 100PF 5%	50V
C554	1-162-953-11	CERAMIC CHIP 100PF 5%	50V
C560	1-135-148-21	TANTAL. CHIP 1.5uF 20%	10V
C563	1-163-037-91	CERAMIC CHIP 0.022uF 10%	25V
C564	1-163-037-91	CERAMIC CHIP 0.022uF 10%	25V
C566	1-126-205-11	ELECT CHIP 47uF 20%	6.3V
C567	1-164-633-11	CERAMIC CHIP 0.1uF 10%	25V
C568	1-163-809-11	CERAMIC CHIP 0.047uF 10%	25V
C569	1-135-091-91	TANTAL. CHIP 1uF 20%	16V
C570	1-164-343-11	CERAMIC CHIP 0.056uF 10%	25V
C571	1-163-809-11	CERAMIC CHIP 0.047uF 10%	25V
C572	1-163-023-00	CERAMIC CHIP 0.015uF 5%	50V
C573	1-164-232-11	CERAMIC CHIP 0.01uF	50V
C574	1-163-037-91	CERAMIC CHIP 0.022uF 10%	25V
C575	1-163-037-91	CERAMIC CHIP 0.022uF 10%	25V
C577	1-164-360-11	CERAMIC CHIP 0.1uF	16V
C578	1-164-633-11	CERAMIC CHIP 0.1uF 10%	25V
C579	1-163-809-11	CERAMIC CHIP 0.047uF 10%	25V
C580	1-135-091-91	TANTAL. CHIP 1uF 20%	16V

Ref. No.	Part No.	Description	Remark
C581	1-164-343-11	CERAMIC CHIP 0.056uF 10%	25V
C582	1-163-809-11	CERAMIC CHIP 0.047uF 10%	25V
C583	1-164-232-11	CERAMIC CHIP 0.01uF	50V
C584	1-163-023-00	CERAMIC CHIP 0.015uF 5%	50V
C585	1-163-037-91	CERAMIC CHIP 0.022uF 10%	25V
C586	1-163-037-91	CERAMIC CHIP 0.022uF 10%	25V
		< CONNECTOR >	
CN551	1-573-290-21	PIN, CONNECTOR (1.5MM) (SMD) 4P	
CN552	1-573-290-21	PIN, CONNECTOR (1.5MM) (SMD) 4P	
CN553	1-691-492-21	CONNECTOR, FFC/FPC 13P	
		< DIODE >	
D551	8-719-016-74	DIODE 1SS352	
		< IC >	
IC551	8-759-084-53	IC CXA1618AN	
IC552	8-749-923-29	IC RS-20E-T	
		< JACK >	
J551	1-691-737-11	JACK (SMALL TYPE) (MIC)	
		< COIL >	
L551	1-410-369-11	INDUCTOR CHIP 1uH	
L552	1-410-369-11	INDUCTOR CHIP 1uH	
L553	1-410-369-11	INDUCTOR CHIP 1uH	
		< TRANSISTOR >	
Q551	8-729-010-80	TRANSISTOR FC13	
Q555	8-729-822-97	TRANSISTOR 2SC4211-5.6.7	
		< RESISTOR >	
R551	1-216-823-11	METAL CHIP 1.5K 5%	1/16W
R552	1-216-823-11	METAL CHIP 1.5K 5%	1/16W
R553	1-216-831-11	METAL CHIP 6.8K 5%	1/16W
R554	1-216-831-11	METAL CHIP 6.8K 5%	1/16W
R562	1-216-864-11	METAL CHIP 0 5%	1/16W
R566	1-216-841-11	METAL CHIP 47K 5%	1/16W
R568	1-216-857-11	METAL CHIP 1M 5%	1/16W
R569	1-216-857-11	METAL CHIP 1M 5%	1/16W
R570	1-216-829-11	METAL CHIP 4.7K 5%	1/16W
R571	1-216-833-11	METAL CHIP 10K 5%	1/16W
R572	1-216-833-11	METAL CHIP 10K 5%	1/16W
R573	1-216-834-11	METAL CHIP 12K 5%	1/16W
R574	1-216-821-11	METAL CHIP 1K 5%	1/16W
R575	1-216-835-11	METAL CHIP 15K 5%	1/16W
R576	1-216-839-11	METAL CHIP 33K 5%	1/16W
R577	1-216-834-11	METAL CHIP 12K 5%	1/16W
R580	1-216-833-11	METAL CHIP 10K 5%	1/16W
R581	1-216-829-11	METAL CHIP 4.7K 5%	1/16W
R582	1-216-833-11	METAL CHIP 10K 5%	1/16W
R583	1-216-821-11	METAL CHIP 1K 5%	1/16W
R584	1-216-834-11	METAL CHIP 12K 5%	1/16W
R585	1-216-833-11	METAL CHIP 10K 5%	1/16W
R586	1-216-835-11	METAL CHIP 15K 5%	1/16W
R587	1-216-839-11	METAL CHIP 33K 5%	1/16W
R588	1-216-834-11	METAL CHIP 12K 5%	1/16W
R590	1-216-841-11	METAL CHIP 47K 5%	1/16W
R593	1-216-820-11	METAL CHIP 820 5%	1/16W
R594	1-216-820-11	METAL CHIP 820 5%	1/16W

****

A-7071-863-A MF-213 BOARD, COMPLETE
****
(Ref. No. 6,000 Series)

Ref. No.	Part No.	Description	Remark
		< CAPACITOR >	
C971	1-163-038-91	CERAMIC CHIP 0.1uF	25V
		< CONNECTOR >	
CN971	1-691-483-21	CONNECTOR, FFC/FPC 4P	
		< RESISTOR >	
R971	1-216-864-11	METAL CHIP 0 5%	1/16W
		< SWITCH >	
S972	1-241-865-11	RES, VAR, CARBON 10K/10K (MANUAL FOCUS RING))	

****

A-7063-693-A SL-32 BOARD, COMPLETE
****
(Ref. No. 4,000 Series)

Ref. No.	Part No.	Description	Remark
		< CAPACITOR >	
C871	1-128-004-11	ELECT CHIP 10uF 20%	16V
C872	1-128-004-11	ELECT CHIP 10uF 20%	16V
C874	1-128-013-11	ELECT CHIP 1uF 20%	50V
C875	1-162-974-11	CERAMIC CHIP 0.01uF	50V
C876	1-163-809-11	CERAMIC CHIP 0.047uF 10%	25V
C877	1-162-968-11	CERAMIC CHIP 0.0047uF 10%	50V
		< CONNECTOR >	
CN871	1-691-473-21	CONNECTOR, FFC/FPC 7P	
CN872	1-691-472-21	CONNECTOR, FFC/FPC 6P	
CN873	1-691-482-21	CONNECTOR, FFC/FPC 15P	

Ref. No.	Part No.	Description			Remark
		< IC >			
IC871	8-759-059-09	IC LB8111V			
		< TRANSISTOR >			
Q871	8-729-402-81	TRANSISTOR XN4501			
		< RESISTOR >			
R872	1-216-845-11	METAL CHIP	100K	5%	1/16W
R873	1-216-845-11	METAL CHIP	100K	5%	1/16W
R877	1-216-845-11	METAL CHIP	100K	5%	1/16W
R878	1-216-840-11	METAL CHIP	39K	5%	1/16W
R879	1-216-174-00	METAL GLAZE	100	5%	1/8W
R881	1-216-864-11	METAL CHIP	0	5%	1/16W
R883	1-216-825-11	METAL CHIP	2.2K	5%	1/16W
R884	1-216-825-11	METAL CHIP	2.2K	5%	1/16W
R895	1-216-864-11	METAL CHIP	0	5%	1/16W
		< NETWORK RESISTOR >			
RB871	1-236-424-11	NETWORK, RES 10KX2			
RB872	1-236-424-11	NETWORK, RES 10KX2			
		< FLAT CABLE >			
W871	1-642-186-11	FP-437 FLEXIBLE BOARD			
W872	1-750-967-11	FP-697 FLEXIBLE BOARD			

****

A-7071-862-A SW-222 BOARD, COMPLETE
****
(Ref. No. 5,000 Series)

Ref. No.	Part No.	Description			Remark
		< SWITCH >			
S903	1-553-977-11	SWITCH, SLIDE (STANDBY)			
S904	1-692-682-11	SWITCH, TACTIL (RUBBER) (REC START/STOP)			
		< FLAT CABLE >			
W903	1-537-594-11	FP-699 FLEXIBLE BOARD			

****

A-7063-688-A VC-132 BOARD, COMPLETE
****
(Ref. No. 2,000 Series)

Ref. No.	Part No.	Description			Remark
		< CAPACITOR >			
C600	1-135-145-11	TANTALUM CHIP	0.47uF	10%	35V
C601	1-135-145-11	TANTALUM CHIP	0.47uF	10%	35V
C602	1-164-156-11	CERAMIC CHIP	0.1uF		25V
C603	1-164-156-11	CERAMIC CHIP	0.1uF		25V
C604	1-135-214-21	TANTAL. CHIP	4.7uF	20%	20V
C605	1-162-964-11	CERAMIC CHIP	0.001uF	10%	50V
C607	1-162-974-11	CERAMIC CHIP	0.01uF		50V
C608	1-135-259-11	TANTAL. CHIP	10uF	20%	6.3V
C609	1-162-949-11	CERAMIC CHIP	47PF	5%	50V
C612	1-162-964-11	CERAMIC CHIP	0.001uF	10%	50V
C613	1-162-964-11	CERAMIC CHIP	0.001uF	10%	50V
C614	1-162-918-11	CERAMIC CHIP	18PF	5%	50V
C616	1-135-259-11	TANTAL. CHIP	10uF	20%	6.3V
C617	1-162-974-11	CERAMIC CHIP	0.01uF		50V
C618	1-162-974-11	CERAMIC CHIP	0.01uF		50V
C619	1-162-974-11	CERAMIC CHIP	0.01uF		50V
C620	1-135-091-91	TANTAL. CHIP	1uF	20%	16V
C621	1-135-091-91	TANTAL. CHIP	1uF	20%	16V
C622	1-162-974-11	CERAMIC CHIP	0.01uF		50V
C623	1-135-181-21	TANTALUM CHIP	4.7uF	20%	6.3V
C624	1-135-181-21	TANTALUM CHIP	4.7uF	20%	6.3V
C625	1-164-156-11	CERAMIC CHIP	0.1uF		25V
C626	1-135-181-21	TANTALUM CHIP	4.7uF	20%	6.3V
C627	1-162-974-11	CERAMIC CHIP	0.01uF		50V
C628	1-135-181-21	TANTALUM CHIP	4.7uF	20%	6.3V
C629	1-162-974-11	CERAMIC CHIP	0.01uF		50V
C632	1-164-156-11	CERAMIC CHIP	0.1uF		25V
C633	1-164-156-11	CERAMIC CHIP	0.1uF		25V
C634	1-164-156-11	CERAMIC CHIP	0.1uF		25V
C641	1-164-156-11	CERAMIC CHIP	0.1uF		25V
C642	1-162-974-11	CERAMIC CHIP	0.01uF		50V
C643	1-162-974-11	CERAMIC CHIP	0.01uF		50V
C644	1-162-974-11	CERAMIC CHIP	0.01uF		50V
C645	1-162-974-11	CERAMIC CHIP	0.01uF		50V
C646	1-162-974-11	CERAMIC CHIP	0.01uF		50V
C647	1-135-181-21	TANTALUM CHIP	4.7uF	20%	6.3V
C648	1-162-974-11	CERAMIC CHIP	0.01uF		50V
C649	1-135-181-21	TANTALUM CHIP	4.7uF	20%	6.3V
C650	1-135-181-21	TANTALUM CHIP	4.7uF	20%	6.3V
C651	1-162-974-11	CERAMIC CHIP	0.01uF		50V
C652	1-135-259-11	TANTAL. CHIP	10uF	20%	6.3V
C653	1-164-156-11	CERAMIC CHIP	0.1uF		25V
C654	1-135-259-11	TANTAL. CHIP	10uF	20%	6.3V
C656	1-164-633-11	CERAMIC CHIP	0.1uF	10%	25V
C657	1-135-149-21	TANTALUM CHIP	2.2uF	20%	10V
C658	1-164-004-11	CERAMIC CHIP	0.1uF	10%	25V
C659	1-128-003-11	ELECT CHIP	22uF	20%	4V
C660	1-162-974-11	CERAMIC CHIP	0.01uF		50V
C661	1-164-156-11	CERAMIC CHIP	0.1uF		25V
C662	1-162-974-11	CERAMIC CHIP	0.01uF		50V
C663	1-162-974-11	CERAMIC CHIP	0.01uF		50V
C664	1-162-910-11	CERAMIC CHIP	5P	0.25PF	50V
C665	1-162-910-11	CERAMIC CHIP	5P	0.25PF	50V
C667	1-164-156-11	CERAMIC CHIP	0.1uF		25V
C668	1-164-156-11	CERAMIC CHIP	0.1uF		25V
C669	1-164-156-11	CERAMIC CHIP	0.1uF		25V

Ref. No.	Part No.	Description			Remark
C670	1-162-974-11	CERAMIC CHIP	0.01uF		50V
C673	1-162-974-11	CERAMIC CHIP	0.01uF		50V
C674	1-162-974-11	CERAMIC CHIP	0.01uF		50V
C675	1-162-974-11	CERAMIC CHIP	0.01uF		50V
C676	1-164-156-11	CERAMIC CHIP	0.1uF		25V
C677	1-162-974-11	CERAMIC CHIP	0.01uF		50V
C678	1-162-943-11	CERAMIC CHIP	15PF	5%	50V
C679	1-135-181-21	TANTALUM CHIP	4.7uF	20%	6.3V
C680	1-162-947-11	CERAMIC CHIP	33PF	5%	50V
C681	1-162-974-11	CERAMIC CHIP	0.01uF		50V
C711	1-164-633-11	CERAMIC CHIP	0.1uF	10%	25V
C712	1-162-964-11	CERAMIC CHIP	0.001uF	10%	50V
C713	1-162-974-11	CERAMIC CHIP	0.01uF		50V
C714	1-162-974-11	CERAMIC CHIP	0.01uF		50V
C715	1-162-638-11	CERAMIC CHIP	1uF		16V
C716	1-126-205-11	ELECT CHIP	47uF	20%	6.3V
C717	1-164-156-11	CERAMIC CHIP	0.1uF		25V
C718	1-162-974-11	CERAMIC CHIP	0.01uF		50V
C719	1-164-173-11	CERAMIC CHIP	0.0039uF	10%	50V
C720	1-164-005-11	CERAMIC CHIP	0.47uF		25V
C721	1-164-156-11	CERAMIC CHIP	0.1uF		25V
C722	1-164-156-11	CERAMIC CHIP	0.1uF		25V
C723	1-162-638-11	CERAMIC CHIP	1uF		16V
C724	1-162-964-11	CERAMIC CHIP	0.001uF	10%	50V
C726	1-128-004-11	ELECT CHIP	10uF	20%	16V
C727	1-162-974-11	CERAMIC CHIP	0.01uF		50V
C728	1-164-156-11	CERAMIC CHIP	0.1uF		25V
C729	1-162-638-11	CERAMIC CHIP	1uF		16V
C740	1-163-809-11	CERAMIC CHIP	0.047uF	10%	25V
C741	1-135-211-11	TANTAL. CHIP	6.8uF	20%	6.3V
C742	1-163-037-91	CERAMIC CHIP	0.022uF	10%	25V
C743	1-164-156-11	CERAMIC CHIP	0.1uF		25V
C744	1-164-156-11	CERAMIC CHIP	0.1uF		25V
C745	1-163-809-11	CERAMIC CHIP	0.047uF	10%	25V
C746	1-163-809-11	CERAMIC CHIP	0.047uF	10%	25V
C747	1-163-809-11	CERAMIC CHIP	0.047uF	10%	25V
C748	1-162-967-11	CERAMIC CHIP	0.0033uF	10%	50V
C749	1-162-967-11	CERAMIC CHIP	0.0033uF	10%	50V
C750	1-163-037-91	CERAMIC CHIP	0.022uF	10%	25V
C751	1-163-037-91	CERAMIC CHIP	0.022uF	10%	25V
C752	1-163-037-91	CERAMIC CHIP	0.022uF	10%	25V
C753	1-163-037-91	CERAMIC CHIP	0.022uF	10%	25V
C754	1-163-037-91	CERAMIC CHIP	0.022uF	10%	25V
C755	1-163-809-11	CERAMIC CHIP	0.047uF	10%	25V
C756	1-163-809-11	CERAMIC CHIP	0.047uF	10%	25V
C757	1-135-211-11	TANTAL. CHIP	6.8uF	20%	6.3V
C758	1-135-259-11	TANTAL. CHIP	10uF	20%	6.3V
C761	1-135-180-21	TANTALUM CHIP	3.3uF	20%	6.3V
C765	1-162-974-11	CERAMIC CHIP	0.01uF		50V
C766	1-162-974-11	CERAMIC CHIP	0.01uF		50V
C767	1-135-091-91	TANTAL. CHIP	1uF	20%	16V
C768	1-165-128-11	CERAMIC CHIP	0.22uF		16V
C771	1-135-210-11	TANTALUM CHIP	4.7uF	20%	10V
C772	1-162-974-11	CERAMIC CHIP	0.01uF		50V
C773	1-135-211-11	TANTAL. CHIP	6.8uF	20%	6.3V
C901	1-165-319-11	CERAMIC CHIP	0.1uF		50V
C902	1-164-361-11	CERAMIC CHIP	0.047uF		16V
C903	1-164-156-11	CERAMIC CHIP	0.1uF		25V
C905	1-135-259-11	TANTAL. CHIP	10uF	20%	6.3V
C906	1-162-974-11	CERAMIC CHIP	0.01uF		50V
C907	1-165-319-11	CERAMIC CHIP	0.1uF		50V
C908	1-162-974-11	CERAMIC CHIP	0.01uF		50V
C909	1-164-346-11	CERAMIC CHIP	1uF		16V
C910	1-162-918-11	CERAMIC CHIP	18PF	5%	50V
C911	1-162-915-11	CERAMIC CHIP	10PF	0.5PF	50V
C912	1-164-346-11	CERAMIC CHIP	1uF		16V
C913	1-135-259-11	TANTAL. CHIP	10uF	20%	6.3V
C917	1-135-156-21	TANTALUM CHIP	6.8uF	10%	10V
C918	1-164-361-11	CERAMIC CHIP	0.047uF		16V
C919	1-164-361-11	CERAMIC CHIP	0.047uF		16V
C920	1-162-974-11	CERAMIC CHIP	0.01uF		50V
C921	1-162-974-11	CERAMIC CHIP	0.01uF		50V
C922	1-135-259-11	TANTAL. CHIP	10uF	20%	6.3V
C923	1-162-974-11	CERAMIC CHIP	0.01uF		50V
C924	1-135-259-11	TANTAL. CHIP	10uF	20%	6.3V
		< CONNECTOR >			
CN601	1-695-409-11	CONNECTOR, BOARD TO BOARD 16P			
CN641	1-691-487-21	CONNECTOR, FFC/FPC 8P			
CN711	1-573-361-11	CONNECTOR, FFC/FPC 21P			
CN740	1-691-491-21	CONNECTOR, FFC/FPC 12P			
CN743	1-691-485-21	CONNECTOR, FFC/FPC 6P			
* CN901	1-750-982-21	CONNECTOR, BOARD TO BOARD 40P			
CN903	1-691-486-11	CONNECTOR, FFC/FPC 7P			
		< TRIMMER >			
CT601	1-141-356-11	CAP, ADJ 6PF (28MHz OSC)			
		< DIODE >			
D601	8-719-404-46	DIODE MA110			
D602	8-719-404-35	DIODE MA141WK			
⚠D901	8-719-421-27	DIODE MA728			
D917	8-719-404-35	DIODE MA141WK			
		< FILTER >			
FL641	1-236-834-21	FILTER, LOW PASS			
FL642	1-415-751-21	DELAY LINE, LC (YH)			

The components identified by mark ⚠ or dotted line with mark ⚠ are critical for safety. Replace only with part number specified.

Ref. No.	Part No.	Description	Remark
FL901	1-406-452-11	COIL, OSC	
		< IC >	
IC601	8-752-355-07	IC CXD1267N-T4	
IC602	8-752-350-16	IC CXD1257AR	
IC603	8-752-053-26	IC CXA1399Q	
IC604	8-752-060-50	IC CXA1577R	
IC641	8-759-069-20	IC AK6420F	
IC653	8-759-249-79	IC SC424605FU5(68HC11)	
IC654	8-759-064-36	IC MB88346BPFV	
IC655	8-752-355-56	IC CXD2104BN	
IC656	8-759-180-77	IC CXD2133AR	
IC659	8-752-350-13	IC CXD2130R	
IC660	8-752-358-10	IC CXD2101BR	
IC661	8-759-031-58	IC SC7SU04F	
IC662	8-759-710-29	IC NJM2235M	
IC711	8-759-701-24	IC NJM3414M	
IC712	8-759-998-98	IC LM358D	
IC713	8-759-058-47	IC MPC1724VM	
IC714	8-759-998-96	IC LM324D	
IC715	8-759-823-51	IC LB1830M	
IC740	8-759-701-24	IC NJM3414M	
IC741	8-759-998-96	IC LM324D	
IC742	8-759-981-75	IC RC3403AM	
IC743	8-759-701-24	IC NJM3414M	
IC744	8-759-058-98	IC SC370605D	
IC745	8-752-842-54	IC CXP80620A-020R	
IC901	8-759-044-78	IC AK6420F	
IC902	8-759-197-66	IC MB89092PFV-G-135	
IC903	8-759-056-84	IC S-8420AF	
IC904	8-759-059-05	IC TL1596CPW	
IC905	8-759-168-42	IC uPD6461GS-606-GLG	
		< COIL >	
L602	1-412-058-11	INDUCTOR CHIP 10uH	
L603	1-412-058-11	INDUCTOR CHIP 10uH	
L604	1-412-058-11	INDUCTOR CHIP 10uH	
L641	1-412-006-31	INDUCTOR CHIP 10uH	
L642	1-412-058-11	INDUCTOR CHIP 10uH	
L643	1-412-058-11	INDUCTOR CHIP 10uH	
L644	1-412-058-11	INDUCTOR CHIP 10uH	
L645	1-412-006-31	INDUCTOR CHIP 10uH	
L646	1-410-392-11	INDUCTOR CHIP 82uH	
L647	1-412-006-31	INDUCTOR CHIP 10uH	
L648	1-412-052-21	INDUCTOR CHIP 1uH	
L649	1-412-052-21	INDUCTOR CHIP 1uH	
L650	1-412-979-21	INDUCTOR 1uH	
L651	1-412-979-21	INDUCTOR 1uH	
L652	1-412-052-21	INDUCTOR CHIP 1uH	

Ref. No.	Part No.	Description	Remark
L653	1-412-052-21	INDUCTOR CHIP 1uH	
L711	1-412-062-11	INDUCTOR CHIP 47uH	
L712	1-412-058-11	INDUCTOR CHIP 10uH	
L740	1-412-058-11	INDUCTOR CHIP 10uH	
L741	1-412-006-31	INDUCTOR CHIP 10uH	
L742	1-412-058-11	INDUCTOR CHIP 10uH	
L743	1-412-058-11	INDUCTOR CHIP 10uH	
L744	1-410-993-11	INDUCTOR CHIP 1uH	
L901	1-410-389-31	INDUCTOR CHIP 47uH	
L902	1-412-026-11	INDUCTOR CHIP 1uH	
L903	1-410-389-31	INDUCTOR CHIP 47uH	
L904	1-412-026-11	INDUCTOR CHIP 1uH	
L905	1-410-389-31	INDUCTOR CHIP 47uH	
		< IC LINK >	
⚠PS901	1-576-123-21	LINK, IC (0.8A)	
		< TRANSISTOR >	
Q601	8-729-403-27	TRANSISTOR XN4401	
Q602	8-729-402-84	TRANSISTOR XN4601	
Q642	8-729-010-60	TRANSISTOR MSA1586-BC	
Q643	8-729-010-75	TRANSISTOR MSC4116-B/C	
Q644	8-729-010-75	TRANSISTOR MSC4116-B/C	
Q645	8-729-010-60	TRANSISTOR MSA1586-BC	
Q711	8-729-602-21	TRANSISTOR 2SC4154-F	
Q712	8-729-403-27	TRANSISTOR XN4401	
Q713	8-729-013-88	TRANSISTOR RN1302-TE85L	
		< RESISTOR >	
R601	1-216-833-11	METAL CHIP 10K 5% 1/16W	
R602	1-216-833-11	METAL CHIP 10K 5% 1/16W	
R603	1-216-864-11	METAL CHIP 0 5% 1/16W	
R604	1-216-825-11	METAL CHIP 2.2K 5% 1/16W	
R605	1-218-721-11	METAL CHIP 16K 0.50% 1/16W	
R606	1-216-821-11	METAL CHIP 1K 5% 1/16W	
R607	1-216-825-11	METAL CHIP 2.2K 5% 1/16W	
R608	1-216-833-11	METAL CHIP 10K 5% 1/16W	
R609	1-216-837-11	METAL CHIP 22K 5% 1/16W	
R610	1-216-805-11	METAL CHIP 47 5% 1/16W	
R611	1-216-832-11	METAL CHIP 8.2K 5% 1/16W	
R612	1-216-801-11	METAL CHIP 22 5% 1/16W	
R613	1-216-825-11	METAL CHIP 2.2K 5% 1/16W	
R614	1-216-816-11	METAL CHIP 390 5% 1/16W	
R615	1-216-864-11	METAL CHIP 0 5% 1/16W	
R616	1-216-864-11	METAL CHIP 0 5% 1/16W	
R636	1-216-864-11	METAL CHIP 0 5% 1/16W	
R637	1-216-833-11	METAL CHIP 10K 5% 1/16W	
R638	1-216-864-11	METAL CHIP 0 5% 1/16W	

The components identified by mark ⚠ or dotted line with mark. ⚠ are critical for safety. Replace only with part number specified.

Ref. No.	Part No.	Description	Remark
R639	1-216-864-11	METAL CHIP 0 5% 1/16W	
R641	1-216-833-11	METAL CHIP 10K 5% 1/16W	
R642	1-216-833-11	METAL CHIP 10K 5% 1/16W	
R643	1-216-821-11	METAL CHIP 1K 5% 1/16W	
R644	1-216-821-11	METAL CHIP 1K 5% 1/16W	
R645	1-216-821-11	METAL CHIP 1K 5% 1/16W	
R646	1-216-821-11	METAL CHIP 1K 5% 1/16W	
R647	1-216-857-11	METAL CHIP 1M 5% 1/16W	
R648	1-216-833-11	METAL CHIP 10K 5% 1/16W	
R649	1-216-864-11	METAL CHIP 0 5% 1/16W	
R650	1-216-833-11	METAL CHIP 10K 5% 1/16W	
R651	1-216-821-11	METAL CHIP 1K 5% 1/16W	
R652	1-216-827-11	METAL CHIP 3.3K 5% 1/16W	
R653	1-216-833-11	METAL CHIP 10K 5% 1/16W	
R654	1-216-833-11	METAL CHIP 10K 5% 1/16W	
R655	1-216-833-11	METAL CHIP 10K 5% 1/16W	
R656	1-216-857-11	METAL CHIP 1M 5% 1/16W	
R657	1-216-857-11	METAL CHIP 1M 5% 1/16W	
R660	1-216-864-11	METAL CHIP 0 5% 1/16W	
R662	1-216-805-11	METAL CHIP 47 5% 1/16W	
R663	1-216-857-11	METAL CHIP 1M 5% 1/16W	
R664	1-216-863-11	METAL GLAZE 3.3M 5% 1/16W	
R668	1-216-825-11	METAL CHIP 2.2K 5% 1/16W	
R669	1-216-864-11	METAL CHIP 0 5% 1/16W	
R670	1-216-864-11	METAL CHIP 0 5% 1/16W	
R671	1-216-821-11	METAL CHIP 1K 5% 1/16W	
R672	1-216-825-11	METAL CHIP 2.2K 5% 1/16W	
R673	1-216-845-11	METAL CHIP 100K 5% 1/16W	
R674	1-216-827-11	METAL CHIP 3.3K 5% 1/16W	
R675	1-216-838-11	METAL CHIP 27K 5% 1/16W	
R676	1-216-839-11	METAL CHIP 33K 5% 1/16W	
R677	1-216-829-11	METAL CHIP 4.7K 5% 1/16W	
R678	1-216-837-11	METAL CHIP 22K 5% 1/16W	
R679	1-216-847-11	METAL CHIP 150K 5% 1/16W	
R680	1-216-839-11	METAL CHIP 33K 5% 1/16W	
R681	1-216-830-11	METAL CHIP 5.6K 5% 1/16W	
R682	1-216-830-11	METAL CHIP 5.6K 5% 1/16W	
R683	1-216-837-11	METAL CHIP 22K 5% 1/16W	
R684	1-216-839-11	METAL CHIP 33K 5% 1/16W	
R694	1-216-815-11	METAL CHIP 330 5% 1/16W	
R695	1-216-833-11	METAL CHIP 10K 5% 1/16W	
R696	1-216-817-11	METAL CHIP 470 5% 1/16W	
R697	1-216-817-11	METAL CHIP 470 5% 1/16W	
R698	1-216-834-11	METAL CHIP 12K 5% 1/16W	
R699	1-216-834-11	METAL CHIP 12K 5% 1/16W	
R701	1-216-827-11	METAL CHIP 3.3K 5% 1/16W	
R702	1-216-841-11	METAL CHIP 47K 5% 1/16W	
R703	1-216-817-11	METAL CHIP 470 5% 1/16W	
R704	1-216-841-11	METAL CHIP 47K 5% 1/16W	

Ref. No.	Part No.	Description	Remark
R705	1-216-825-11	METAL CHIP 2.2K 5% 1/16W	
R706	1-216-821-11	METAL CHIP 1K 5% 1/16W	
R707	1-216-825-11	METAL CHIP 2.2K 5% 1/16W	
R708	1-216-827-11	METAL CHIP 3.3K 5% 1/16W	
R709	1-216-857-11	METAL CHIP 1M 5% 1/16W	
R710	1-216-821-11	METAL CHIP 1K 5% 1/16W	
R711	1-216-815-11	METAL CHIP 330 5% 1/16W	
R712	1-216-821-11	METAL CHIP 1K 5% 1/16W	
R713	1-216-845-11	METAL CHIP 100K 5% 1/16W	
R714	1-216-855-11	METAL CHIP 680K 5% 1/16W	
R715	1-216-848-11	METAL CHIP 180K 5% 1/16W	
R716	1-216-848-11	METAL CHIP 180K 5% 1/16W	
R717	1-216-833-11	METAL CHIP 10K 5% 1/16W	
R718	1-216-837-11	METAL CHIP 22K 5% 1/16W	
R719	1-216-837-11	METAL CHIP 22K 5% 1/16W	
R720	1-216-825-11	METAL CHIP 2.2K 5% 1/16W	
R721	1-216-842-11	METAL CHIP 56K 5% 1/16W	
R722	1-218-871-11	METAL CHIP 10K 0.50% 1/16W	
R723	1-218-744-11	METAL CHIP 150K 0.50% 1/16W	
R724	1-216-833-11	METAL CHIP 10K 5% 1/16W	
R725	1-216-833-11	METAL CHIP 10K 5% 1/16W	
R726	1-216-833-11	METAL CHIP 10K 5% 1/16W	
R727	1-216-820-11	METAL CHIP 820 5% 1/16W	
R728	1-216-841-11	METAL CHIP 47K 5% 1/16W	
R729	1-216-837-11	METAL CHIP 22K 5% 1/16W	
R730	1-216-851-11	METAL CHIP 330K 5% 1/16W	
R731	1-216-828-11	METAL CHIP 3.9K 5% 1/16W	
R732	1-216-837-11	METAL CHIP 22K 5% 1/16W	
R733	1-216-827-11	METAL CHIP 3.3K 5% 1/16W	
R734	1-218-881-11	METAL CHIP 27K 0.50% 1/16W	
R735	1-216-134-00	METAL CHIP 2.2 5% 1/8W	
R736	1-216-833-11	METAL CHIP 10K 5% 1/16W	
R737	1-216-829-11	METAL CHIP 4.7K 5% 1/16W	
R738	1-218-879-11	METAL CHIP 22K 0.50% 1/16W	
R739	1-216-857-11	METAL CHIP 1M 5% 1/16W	
R740	1-218-688-11	METAL CHIP 680 0.50% 1/16W	
R741	1-218-716-11	METAL CHIP 10K 0.50% 1/16W	
R742	1-218-716-11	METAL CHIP 10K 0.50% 1/16W	
R743	1-218-740-11	METAL CHIP 100K 0.50% 1/16W	
R744	1-216-823-11	METAL CHIP 1.5K 5% 1/16W	
R745	1-218-708-11	METAL CHIP 4.7K 0.50% 1/16W	
R746	1-218-688-11	METAL CHIP 680 0.50% 1/16W	
R747	1-216-837-11	METAL CHIP 22K 5% 1/16W	
R748	1-216-837-11	METAL CHIP 22K 5% 1/16W	
R749	1-216-837-11	METAL CHIP 22K 5% 1/16W	
R750	1-216-837-11	METAL CHIP 22K 5% 1/16W	
R751	1-218-716-11	METAL CHIP 10K 0.50% 1/16W	
R752	1-218-716-11	METAL CHIP 10K 0.50% 1/16W	
R753	1-218-740-11	METAL CHIP 100K 0.50% 1/16W	

Ref. No.	Part No.	Description			Remark
R754	1-216-823-11	METAL CHIP	1.5K	5%	1/16W
R755	1-218-740-11	METAL CHIP	100K	0.50%	1/16W
R756	1-218-740-11	METAL CHIP	100K	0.50%	1/16W
R757	1-218-708-11	METAL CHIP	4.7K	0.50%	1/16W
R758	1-216-840-11	METAL CHIP	39K	5%	1/16W
R759	1-218-740-11	METAL CHIP	100K	0.50%	1/16W
R760	1-218-748-11	METAL CHIP	220K	0.50%	1/16W
R761	1-218-748-11	METAL CHIP	220K	0.50%	1/16W
R762	1-218-740-11	METAL CHIP	100K	0.50%	1/16W
R763	1-216-840-11	METAL CHIP	39K	5%	1/16W
R764	1-218-887-11	METAL CHIP	47K	0.50%	1/16W
R765	1-218-887-11	METAL CHIP	47K	0.50%	1/16W
R766	1-216-821-11	METAL CHIP	1K	5%	1/16W
R768	1-216-837-11	METAL CHIP	22K	5%	1/16W
R769	1-216-837-11	METAL CHIP	22K	5%	1/16W
R770	1-216-864-11	METAL CHIP	0	5%	1/16W
R771	1-216-864-11	METAL CHIP	0	5%	1/16W
R772	1-216-864-11	METAL CHIP	0	5%	1/16W
R773	1-216-864-11	METAL CHIP	0	5%	1/16W
R778	1-216-814-11	METAL CHIP	270	5%	1/16W
R779	1-216-827-11	METAL CHIP	3.3K	5%	1/16W
R780	1-216-857-11	METAL CHIP	1M	5%	1/16W
R900	1-216-809-11	METAL CHIP	100	5%	1/16W
R902	1-216-821-11	METAL CHIP	1K	5%	1/16W
R903	1-216-864-11	METAL CHIP	0	5%	1/16W
R906	1-216-853-11	METAL CHIP	470K	5%	1/16W
R907	1-216-853-11	METAL CHIP	470K	5%	1/16W
R908	1-216-817-11	METAL CHIP	470	5%	1/16W
R909	1-216-817-11	METAL CHIP	470	5%	1/16W
R910	1-216-853-11	METAL CHIP	470K	5%	1/16W
R911	1-216-853-11	METAL CHIP	470K	5%	1/16W
R912	1-216-817-11	METAL CHIP	470	5%	1/16W
R913	1-216-845-11	METAL CHIP	100K	5%	1/16W
R914	1-216-845-11	METAL CHIP	100K	5%	1/16W
R915	1-216-817-11	METAL CHIP	470	5%	1/16W
R916	1-216-845-11	METAL CHIP	100K	5%	1/16W
R917	1-216-853-11	METAL CHIP	470K	5%	1/16W
R918	1-216-841-11	METAL CHIP	47K	5%	1/16W
R919	1-216-845-11	METAL CHIP	100K	5%	1/16W
R920	1-216-864-11	METAL CHIP	0	5%	1/16W
R921	1-216-845-11	METAL CHIP	100K	5%	1/16W
R922	1-216-845-11	METAL CHIP	100K	5%	1/16W
R923	1-216-821-11	METAL CHIP	1K	5%	1/16W
R925	1-216-821-11	METAL CHIP	1K	5%	1/16W
R926	1-216-809-11	METAL CHIP	100	5%	1/16W
R927	1-216-809-11	METAL CHIP	100	5%	1/16W
R929	1-216-817-11	METAL CHIP	470	5%	1/16W
R930	1-216-821-11	METAL CHIP	1K	5%	1/16W

Ref. No.	Part No.	Description			Remark
R932	1-216-851-11	METAL CHIP	330K	5%	1/16W
R933	1-216-864-11	METAL CHIP	0	5%	1/16W
R935	1-216-841-11	METAL CHIP	47K	5%	1/16W
R936	1-216-841-11	METAL CHIP	47K	5%	1/16W
R937	1-216-827-11	METAL CHIP	3.3K	5%	1/16W
R938	1-216-845-11	METAL CHIP	100K	5%	1/16W
R939	1-216-821-11	METAL CHIP	1K	5%	1/16W
R940	1-216-821-11	METAL CHIP	1K	5%	1/16W
R941	1-216-817-11	METAL CHIP	470	5%	1/16W
R942	1-216-817-11	METAL CHIP	470	5%	1/16W
R943	1-216-864-11	METAL CHIP	0	5%	1/16W
R944	1-216-841-11	METAL CHIP	47K	5%	1/16W
R945	1-216-841-11	METAL CHIP	47K	5%	1/16W
R946	1-216-817-11	METAL CHIP	470	5%	1/16W
R947	1-216-841-11	METAL CHIP	47K	5%	1/16W
R948	1-216-809-11	METAL CHIP	100	5%	1/16W
R949	1-216-826-11	METAL CHIP	2.7K	5%	1/16W
R950	1-216-809-11	METAL CHIP	100	5%	1/16W
R951	1-216-841-11	METAL CHIP	47K	5%	1/16W
R952	1-216-841-11	METAL CHIP	47K	5%	1/16W
R953	1-216-841-11	METAL CHIP	47K	5%	1/16W
R954	1-216-864-11	METAL CHIP	0	5%	1/16W
R955	1-216-825-11	METAL CHIP	2.2K	5%	1/16W
R956	1-216-864-11	METAL CHIP	0	5%	1/16W
R957	1-216-825-11	METAL CHIP	2.2K	5%	1/16W
R958	1-216-825-11	METAL CHIP	2.2K	5%	1/16W
R959	1-216-825-11	METAL CHIP	2.2K	5%	1/16W
R960	1-216-825-11	METAL CHIP	2.2K	5%	1/16W
R962	1-216-845-11	METAL CHIP	100K	5%	1/16W
R963	1-216-845-11	METAL CHIP	100K	5%	1/16W
R966	1-216-864-11	METAL CHIP	0	5%	1/16W
R967	1-216-864-11	METAL CHIP	0	5%	1/16W
R968	1-216-809-11	METAL CHIP	100	5%	1/16W
R969	1-216-809-11	METAL CHIP	100	5%	1/16W
R970	1-216-809-11	METAL CHIP	100	5%	1/16W

< NETWORK RESISTOR >

RB903	1-236-412-11	NETWORK, RES 1.0KX2
RB904	1-236-412-11	NETWORK, RES 1.0KX2
RB905	1-236-412-11	NETWORK, RES 1.0KX2
RB906	1-236-412-11	NETWORK, RES 1.0KX2
RB907	1-236-412-11	NETWORK, RES 1.0KX2
RB908	1-236-412-11	NETWORK, RES 1.0KX2
RB909	1-236-412-11	NETWORK, RES 1.0KX2
RB910	1-236-412-11	NETWORK, RES 1.0KX2
RB911	1-236-412-11	NETWORK, RES 1.0KX2
RB912	1-236-412-11	NETWORK, RES 1.0KX2

Ref. No.	Part No.	Description	Remark

< VIBRATOR >

X601	1-579-622-11	VIBRATOR, CRYSTAL (28.375MHz)
X641	1-760-165-21	VIBRATOR, CERAMIC (16MHz)
X740	1-579-553-11	VIBRATOR (12MHz)
X901	1-579-049-21	VIBRATOR, CRYSTAL (32KHz)

< VIBRATOR >

XTL901	1-579-369-21	VIBRATOR (10MHz)

****

A-7063-220-A VF-42 BOARD, COMPLETE

****

(Ref. No. 8,000 Series)

3-942-888-01 HOLDER, LED

< CAPACITOR >

C501	1-126-176-11	ELECT	220uF	20%	10V
C502	1-163-077-00	CERAMIC CHIP	0.1uF	10%	25V
C503	1-163-109-00	CERAMIC CHIP	47PF	5%	50V
⚠C504	1-163-009-11	CERAMIC CHIP	0.001uF	10%	50V
⚠C505	1-164-758-11	CERAMIC CHIP	0.0039uF	5%	50V
⚠C506	1-164-715-11	CERAMIC CHIP	0.0068uF	5%	50V
⚠C507	1-127-515-11	ELECT(SOLID)	47uF	20%	6.3V
C508	1-164-611-11	CERAMIC CHIP	0.001uF	10%	500V
C509	1-124-257-00	ELECT	2.2uF	20%	50V
C510	1-163-037-91	CERAMIC CHIP	0.022uF	10%	25V
C511	1-126-090-11	ELECT	82uF	20%	10V
C512	1-137-306-11	FILM CHIP	0.1uF	5%	16V
C513	1-135-149-21	TANTALUM CHIP	2.2uF	20%	10V
C514	1-131-381-00	TANTALUM	47uF	10%	10V
C515	1-163-037-91	CERAMIC CHIP	0.022uF	10%	25V
C516	1-135-149-21	TANTALUM CHIP	2.2uF	20%	10V

< CONNECTOR >

* CN501	1-566-759-11	PIN, CONNECTOR (PC BOARD) 4P
* CN502	1-566-195-11	PIN, CONNECTOR (PC BOARD) 2P
* CN503	1-566-195-11	PIN, CONNECTOR (PC BOARD) 2P

< DIODE >

D501	8-719-820-65	DIODE TLS221 (TALLY)
D502	8-719-984-02	BR4371F (TALLY)
D503	8-719-400-20	DIODE MA152WA

< IC >

IC501	8-759-420-01	IC AN2512S

Ref. No.	Part No.	Description	Remark

< COIL >

L501	1-408-976-21	INDUCTOR 33uH
L502	1-408-785-21	INDUCTOR CHIP 47uH
⚠L503	1-459-876-41	COIL, FERRITE (HLC)

< TRANSISTOR >

Q501	8-729-120-28	TRANSISTOR 2SC1623-L5L6
Q502	8-729-216-31	TRANSISTOR 2SA1163-G
Q504	8-729-106-68	TRANSISTOR 2SD1615A-GP

< RESISTOR >

R501	1-216-033-00	METAL CHIP	220	5%	1/10W
R502	1-216-041-00	METAL CHIP	470	5%	1/10W
R503	1-216-041-00	METAL CHIP	470	5%	1/10W
R506	1-216-069-00	METAL CHIP	6.8K	5%	1/10W
R507	1-216-047-00	METAL CHIP	820	5%	1/10W
R508	1-216-689-11	METAL CHIP	39K	0.5%	1/10W
R509	1-216-689-11	METAL CHIP	39K	0.5%	1/10W
R510	1-216-005-00	METAL CHIP	15	5%	1/10W
R511	1-216-121-00	METAL CHIP	1M	5%	1/10W
R512	1-216-131-11	METAL CHIP	2.7M	5%	1/10W
R513	1-216-101-00	METAL CHIP	150K	5%	1/10W
R514	1-216-121-00	METAL CHIP	1M	5%	1/10W
R515	1-216-131-11	METAL CHIP	2.7M	5%	1/10W
R516	1-216-055-00	METAL CHIP	1.8K	5%	1/10W
R517	1-216-025-00	METAL CHIP	100	5%	1/10W
R518	1-216-308-00	METAL CHIP	4.7	5%	1/10W
R519	1-216-336-11	METAL CHIP	47K	1%	1/10W
R520	1-216-107-00	METAL CHIP	270K	5%	1/10W
R521	1-216-121-00	METAL CHIP	1M	5%	1/10W
R522	1-216-160-00	METAL GLAZE	27	5%	1/8W
R523	1-216-053-00	METAL CHIP	1.5K	5%	1/10W
R524	1-216-113-00	METAL CHIP	470K	5%	1/10W
R525	1-216-097-00	METAL CHIP	100K	5%	1/10W

< VARIABLE RESISTOR >

RV501	1-241-596-11	RES, ADJ, METAL GRAZE 47K (H FREQ)
RV502	1-241-590-11	RES, ADJ, METAL GRAZE 470 (V SIZE)
RV503	1-241-592-11	RES, ADJ, METAL GRAZE 2.2K (CONTRAST)
RV504	1-228-762-00	RES, ADJ, METAL GLAZE 1M (BRIGHTNESS)

< TRANSFORMER >

⚠T501	1-439-486-11	TRANSFORMER ASSY, FLYBACK

< THERMISTOR >

TH501	1-809-350-21	THERMISTOR, NTC (2125)

The components identified by mark ⚠ or dotted line with mark. ⚠ are critical for safety. Replace only with part number specified.

Ref. No.	Part No.	Description			Remark
		< FLAT CABLE >			
⚠W501	1-540-019-21	SOCKET ASSY, CRT			

****

A-7063-687-A VS-99 BOARD, COMPLETE
****
(Ref. No. 3,000 Series)

< CAPACITOR >

Ref. No.	Part No.	Description			Remark
C002	1-164-360-11	CERAMIC CHIP	0.1uF		16V
C003	1-162-953-11	CERAMIC CHIP	100PF	5%	50V
C004	1-162-926-11	CERAMIC CHIP	82PF	5%	50V
C005	1-162-927-11	CERAMIC CHIP	100PF	5%	50V
C006	1-164-217-11	CERAMIC CHIP	150PF	5%	50V
C020	1-162-970-11	CERAMIC CHIP	0.01uF	10%	25V
C021	1-162-970-11	CERAMIC CHIP	0.01uF	10%	25V
C022	1-162-970-11	CERAMIC CHIP	0.01uF	10%	25V
C023	1-162-970-11	CERAMIC CHIP	0.01uF	10%	25V
C024	1-162-915-11	CERAMIC CHIP	10PF	0.5PF	50V
C025	1-162-915-11	CERAMIC CHIP	10PF	0.5PF	50V
C026	1-135-259-11	TANTAL. CHIP	10uF	20%	6.3V
C027	1-162-974-11	CERAMIC CHIP	0.01uF		50V
C029	1-162-974-11	CERAMIC CHIP	0.01uF		50V
C030	1-162-970-11	CERAMIC CHIP	0.01uF	10%	25V
C038	1-164-360-11	CERAMIC CHIP	0.1uF		16V
C039	1-164-004-11	CERAMIC CHIP	0.1uF	10%	25V
C040	1-135-259-11	TANTAL. CHIP	10uF	20%	6.3V
C041	1-164-004-11	CERAMIC CHIP	0.1uF	10%	25V
C043	1-162-970-11	CERAMIC CHIP	0.01uF	10%	25V
C044	1-162-970-11	CERAMIC CHIP	0.01uF	10%	25V
C046	1-135-259-11	TANTAL. CHIP	10uF	20%	6.3V
C047	1-162-974-11	CERAMIC CHIP	0.01uF		50V
C048	1-164-004-11	CERAMIC CHIP	0.1uF	10%	25V
C049	1-164-360-11	CERAMIC CHIP	0.1uF		16V
C050	1-135-259-11	TANTAL. CHIP	10uF	20%	6.3V
C051	1-162-970-11	CERAMIC CHIP	0.01uF	10%	25V
C052	1-162-970-11	CERAMIC CHIP	0.01uF	10%	25V
C053	1-164-004-11	CERAMIC CHIP	0.1uF	10%	25V
C054	1-165-176-11	CERAMIC CHIP	0.047uF	10%	16V
C055	1-165-176-11	CERAMIC CHIP	0.047uF	10%	16V
C056	1-162-974-11	CERAMIC CHIP	0.01uF		50V
C057	1-162-974-11	CERAMIC CHIP	0.01uF		50V
C058	1-162-974-11	CERAMIC CHIP	0.01uF		50V
C059	1-162-974-11	CERAMIC CHIP	0.01uF		50V
C060	1-162-974-11	CERAMIC CHIP	0.01uF		50V
C061	1-135-259-11	TANTAL. CHIP	10uF	20%	6.3V
C062	1-162-970-11	CERAMIC CHIP	0.01uF	10%	25V
C064	1-162-974-11	CERAMIC CHIP	0.01uF		50V
C095	1-162-974-11	CERAMIC CHIP	0.01uF		50V
C096	1-135-259-11	TANTAL. CHIP	10uF	20%	6.3V
C104	1-165-128-11	CERAMIC CHIP	0.22uF		16V
C121	1-162-995-11	CERAMIC CHIP	0.022uF		50V
C122	1-162-995-11	CERAMIC CHIP	0.022uF		50V
C123	1-162-944-11	CERAMIC CHIP	18PF	5%	50V
C125	1-162-949-11	CERAMIC CHIP	47PF	5%	50V
C126	1-162-934-11	CERAMIC CHIP	3PF	0.25PF	50V
C128	1-162-970-11	CERAMIC CHIP	0.01uF	10%	25V
C129	1-162-976-11	CERAMIC CHIP	75PF	5%	50V
C130	1-162-942-11	CERAMIC CHIP	12PF	5%	50V
C131	1-162-970-11	CERAMIC CHIP	0.01uF	10%	25V
C132	1-162-956-11	CERAMIC CHIP	180PF	5%	50V
C133	1-162-970-11	CERAMIC CHIP	0.01uF	10%	25V
C134	1-162-995-11	CERAMIC CHIP	0.022uF		50V
C135	1-162-948-11	CERAMIC CHIP	39PF	5%	50V
C136	1-162-943-11	CERAMIC CHIP	15PF	5%	50V
C137	1-162-970-11	CERAMIC CHIP	0.01uF	10%	25V
C139	1-162-947-11	CERAMIC CHIP	33PF	5%	50V
C140	1-162-958-11	CERAMIC CHIP	270PF	5%	50V
C141	1-164-360-11	CERAMIC CHIP	0.1uF		16V
C146	1-162-970-11	CERAMIC CHIP	0.01uF	10%	25V
C156	1-162-970-11	CERAMIC CHIP	0.01uF	10%	25V
C160	1-162-947-11	CERAMIC CHIP	33PF	5%	50V
C164	1-162-966-11	CERAMIC CHIP	0.0022uF	10%	50V
C170	1-162-958-11	CERAMIC CHIP	270PF	5%	50V
C195	1-135-259-11	TANTAL. CHIP	10uF	20%	6.3V
C200	1-135-259-11	TANTAL. CHIP	10uF	20%	6.3V
C201	1-162-974-11	CERAMIC CHIP	0.01uF		50V
C231	1-162-974-11	CERAMIC CHIP	0.01uF		50V
C232	1-162-951-11	CERAMIC CHIP	68PF	5%	50V
C233	1-135-259-11	TANTAL. CHIP	10uF	20%	6.3V
C234	1-162-974-11	CERAMIC CHIP	0.01uF		50V
C235	1-135-259-11	TANTAL. CHIP	10uF	20%	6.3V
C236	1-135-259-11	TANTAL. CHIP	10uF	20%	6.3V
C237	1-126-246-11	ELECT CHIP	220uF	20%	4V
C238	1-164-361-11	CERAMIC CHIP	0.047uF		16V
C239	1-135-192-21	TANTAL. CHIP	0.47uF	20%	20V
C240	1-164-005-11	CERAMIC CHIP	0.47uF		25V
C241	1-135-259-11	TANTAL. CHIP	10uF	20%	6.3V
C242	1-135-180-21	TANTALUM CHIP	3.3uF	20%	6.3V
C243	1-162-944-11	CERAMIC CHIP	18PF	5%	50V
C244	1-164-005-11	CERAMIC CHIP	0.47uF		25V
C245	1-163-029-11	CERAMIC CHIP	0.0047uF		50V
C246	1-162-974-11	CERAMIC CHIP	0.01uF		50V
C247	1-162-967-11	CERAMIC CHIP	0.0033uF	10%	50V
C248	1-164-360-11	CERAMIC CHIP	0.1uF		16V
C249	1-162-956-11	CERAMIC CHIP	180PF	5%	50V
C250	1-164-005-11	CERAMIC CHIP	0.47uF		25V
C251	1-164-471-11	CERAMIC CHIP	680PF	5%	50V

The components identified by mark ⚠ or dotted line with mark. ⚠ are critical for safety. Replace only with part number specified.

Ref. No.	Part No.	Description			Remark
C253	1-164-346-11	CERAMIC CHIP	1uF		16V
C254	1-126-205-11	ELECT CHIP	47uF	20%	6.3V
C255	1-135-151-21	TANTALUM CHIP	4.7uF	20%	4V
C256	1-135-259-11	TANTAL. CHIP	10uF	20%	6.3V
C257	1-135-180-21	TANTALUM CHIP	3.3uF	20%	6.3V
C258	1-162-974-11	CERAMIC CHIP	0.01uF		50V
C259	1-162-995-11	CERAMIC CHIP	0.022uF		50V
C260	1-162-974-11	CERAMIC CHIP	0.01uF		50V
C261	1-135-259-11	TANTALUM CHIP	10uF	20%	6.3V
C262	1-163-038-91	CERAMIC CHIP	0.1uF		25V
C263	1-164-149-11	CERAMIC CHIP	36PF	5%	50V
C264	1-135-259-11	TANTAL. CHIP	10uF	20%	6.3V
C267	1-162-974-11	CERAMIC CHIP	0.01uF		50V
C268	1-162-974-11	CERAMIC CHIP	0.01uF		50V
C269	1-162-957-11	CERAMIC CHIP	220PF	5%	50V
C272	1-135-259-11	TANTAL. CHIP	10uF	20%	6.3V
C275	1-162-974-11	CERAMIC CHIP	0.01uF		50V
C276	1-135-259-11	TANTAL. CHIP	10uF	20%	6.3V
C277	1-162-949-11	CERAMIC CHIP	47PF	5%	50V
C278	1-162-974-11	CERAMIC CHIP	0.01uF		50V
C279	1-135-259-11	TANTAL. CHIP	10uF	20%	6.3V
C280	1-162-955-11	CERAMIC CHIP	150PF	5%	50V
C281	1-162-974-11	CERAMIC CHIP	0.01uF		50V
C282	1-162-974-11	CERAMIC CHIP	0.01uF		50V
C284	1-135-259-11	TANTAL. CHIP	10uF	20%	6.3V
C285	1-162-953-11	CERAMIC CHIP	100PF	5%	50V
C286	1-135-259-11	TANTAL. CHIP	10uF	20%	6.3V
C287	1-162-974-11	CERAMIC CHIP	0.01uF		50V
C288	1-135-259-11	TANTAL. CHIP	10uF	20%	6.3V
C290	1-164-005-11	CERAMIC CHIP	0.47uF		25V
C291	1-135-259-11	TANTAL. CHIP	10uF	20%	6.3V
C292	1-162-974-11	CERAMIC CHIP	0.01uF		50V
C293	1-162-954-11	CERAMIC CHIP	120PF	5%	50V
C294	1-164-392-11	CERAMIC CHIP	390PF	5%	50V
C295	1-162-959-11	CERAMIC CHIP	330PF	5%	50V
C296	1-135-180-21	TANTALUM CHIP	3.3uF	20%	6.3V
C297	1-135-259-11	TANTAL. CHIP	10uF	20%	6.3V
C298	1-162-974-11	CERAMIC CHIP	0.01uF		50V
C299	1-135-180-21	TANTALUM CHIP	3.3uF	20%	6.3V
C300	1-135-259-11	TANTAL. CHIP	10uF	20%	6.3V
C301	1-162-974-11	CERAMIC CHIP	0.01uF		50V
C302	1-162-974-11	CERAMIC CHIP	0.01uF		50V
C303	1-135-259-11	TANTAL. CHIP	10uF	20%	6.3V
C304	1-135-259-11	TANTAL. CHIP	10uF	20%	6.3V
C305	1-162-959-11	CERAMIC CHIP	330PF	5%	50V
C307	1-162-974-11	CERAMIC CHIP	0.01uF		50V
C312	1-162-949-11	CERAMIC CHIP	47PF	5%	50V
C316	1-162-974-11	CERAMIC CHIP	0.01uF		50V
C323	1-162-945-11	CERAMIC CHIP	22PF	5%	50V
C324	1-135-259-11	TANTAL. CHIP	10uF	20%	6.3V
C325	1-162-948-11	CERAMIC CHIP	39PF	5%	50V
C328	1-135-259-11	TANTAL. CHIP	10uF	20%	6.3V
C330	1-162-974-11	CERAMIC CHIP	0.01uF		50V
C331	1-162-947-11	CERAMIC CHIP	33PF	5%	50V
C332	1-162-955-11	CERAMIC CHIP	150PF	5%	50V
C333	1-135-259-11	TANTAL. CHIP	10uF	20%	6.3V
C334	1-135-259-11	TANTAL. CHIP	10uF	20%	6.3V
C335	1-135-259-11	TANTAL. CHIP	10uF	20%	6.3V
C336	1-162-956-11	CERAMIC CHIP	180PF	5%	50V
C338	1-162-946-11	CERAMIC CHIP	27PF	5%	50V
C340	1-162-974-11	CERAMIC CHIP	0.01uF		50V
C342	1-162-974-11	CERAMIC CHIP	0.01uF		50V
C344	1-135-259-11	TANTAL. CHIP	10uF	20%	6.3V
C346	1-162-974-11	CERAMIC CHIP	0.01uF		50V
C348	1-162-936-11	CERAMIC CHIP	5PF	0.25PF	50V
C350	1-162-951-11	CERAMIC CHIP	68PF	5%	50V
C351	1-164-217-11	CERAMIC CHIP	150PF	5%	50V
C352	1-162-950-11	CERAMIC CHIP	56PF	5%	50V
C354	1-162-974-11	CERAMIC CHIP	0.01uF		50V
C355	1-162-957-11	CERAMIC CHIP	220PF	5%	50V
C356	1-135-259-11	TANTAL. CHIP	10uF	20%	6.3V
C357	1-162-974-11	CERAMIC CHIP	0.01uF		50V
C358	1-162-953-11	CERAMIC CHIP	100PF	5%	50V
C360	1-164-383-11	CERAMIC CHIP	110PF	5%	50V
C361	1-162-918-11	CERAMIC CHIP	18PF	5%	50V
C362	1-162-974-11	CERAMIC CHIP	0.01uF		50V
C363	1-162-964-11	CERAMIC CHIP	0.001uF	10%	50V
C364	1-135-179-21	TANTAL. CHIP	2.2uF	20%	16V
C365	1-162-974-11	CERAMIC CHIP	0.01uF		50V
C366	1-162-949-11	CERAMIC CHIP	47PF	5%	50V
C367	1-135-091-91	TANTAL. CHIP	1uF	20%	16V
C368	1-162-959-11	CERAMIC CHIP	330PF	5%	50V
C369	1-162-964-11	CERAMIC CHIP	0.001uF	10%	50V
C370	1-163-038-91	CERAMIC CHIP	0.1uF		25V
C371	1-162-974-11	CERAMIC CHIP	0.01uF		50V
C372	1-162-967-11	CERAMIC CHIP	0.0033uF	10%	50V
C373	1-162-952-11	CERAMIC CHIP	82PF	5%	50V
C374	1-135-181-21	TANTALUM CHIP	4.7uF	20%	6.3V
C375	1-164-145-11	CERAMIC CHIP	390PF	5%	50V
C376	1-128-004-11	ELECT CHIP	10uF	20%	16V
C378	1-162-974-11	CERAMIC CHIP	0.01uF		50V
C379	1-126-205-11	ELECT CHIP	47uF	20%	6.3V
C380	1-162-974-11	CERAMIC CHIP	0.01uF		50V
C383	1-162-974-11	CERAMIC CHIP	0.01uF		50V
C384	1-164-360-11	CERAMIC CHIP	0.1uF		16V
C386	1-162-974-11	CERAMIC CHIP	0.01uF		50V
C388	1-162-947-11	CERAMIC CHIP	33PF	5%	50V

Ref. No.	Part No.	Description			Remark
C389	1-128-004-11	ELECT CHIP	10uF	20%	16V
C390	1-128-013-11	ELECT CHIP	1uF	20%	50V
C391	1-162-941-11	CERAMIC CHIP	10PF	0.5PF	50V
C392	1-162-969-11	CERAMIC CHIP	0.0068uF	10%	25V
C393	1-162-974-11	CERAMIC CHIP	0.01uF		50V
C394	1-162-995-11	CERAMIC CHIP	0.022uF		50V
C395	1-135-176-21	TANTALUM CHIP	0.68uF	10%	20V
C396	1-162-947-11	CERAMIC CHIP	33PF	5%	50V
C397	1-128-013-11	ELECT CHIP	1uF	20%	50V
C502	1-128-530-11	ELECT CHIP	33uF	20%	10V
C503	1-163-038-91	CERAMIC CHIP	0.1uF		25V
C504	1-128-004-11	ELECT CHIP	10uF	20%	16V
C506	1-162-974-11	CERAMIC CHIP	0.01uF		50V
C507	1-162-974-11	CERAMIC CHIP	0.01uF		50V
C508	1-135-259-11	TANTAL. CHIP	10uF	20%	6.3V
C509	1-162-937-11	CERAMIC CHIP	6PF	0.5PF	50V
C511	1-162-909-11	CERAMIC CHIP	4PF	0.25PF	50V
C512	1-163-077-00	CERAMIC CHIP	0.1uF	10%	25V
C513	1-164-298-11	CERAMIC CHIP	0.15uF	10%	25V
C514	1-164-298-11	CERAMIC CHIP	0.15uF	10%	25V
C515	1-162-942-11	CERAMIC CHIP	12PF	5%	50V
C516	1-163-037-91	CERAMIC CHIP	0.022uF	10%	25V
C517	1-135-259-11	TANTAL. CHIP	10uF	20%	6.3V
C518	1-162-974-11	CERAMIC CHIP	0.01uF		50V
C519	1-164-004-11	CERAMIC CHIP	0.1uF	10%	25V
C520	1-164-004-11	CERAMIC CHIP	0.1uF	10%	25V
C521	1-162-970-11	CERAMIC CHIP	0.01uF	10%	25V
C522	1-162-967-11	CERAMIC CHIP	0.0033uF	10%	50V
C523	1-162-967-11	CERAMIC CHIP	0.0033uF	10%	50V
C524	1-162-967-11	CERAMIC CHIP	0.0033uF	10%	50V
C525	1-162-964-11	CERAMIC CHIP	0.001uF	10%	50V
C526	1-162-969-11	CERAMIC CHIP	0.0068uF	10%	25V
C527	1-162-969-11	CERAMIC CHIP	0.0068uF	10%	25V
C528	1-162-964-11	CERAMIC CHIP	0.001uF	10%	50V
C529	1-162-974-11	CERAMIC CHIP	0.01uF		50V
C530	1-135-259-11	TANTAL. CHIP	10uF	20%	6.3V
C532	1-162-965-11	CERAMIC CHIP	0.0015uF	10%	50V
C533	1-164-361-11	CERAMIC CHIP	0.047uF		16V
C534	1-162-995-11	CERAMIC CHIP	0.022uF		50V
C535	1-162-974-11	CERAMIC CHIP	0.01uF		50V
C536	1-162-970-11	CERAMIC CHIP	0.01uF	10%	25V
C537	1-162-974-11	CERAMIC CHIP	0.01uF		50V
C538	1-162-974-11	CERAMIC CHIP	0.01uF		50V
C539	1-135-259-11	TANTAL. CHIP	10uF	20%	6.3V
C540	1-162-974-11	CERAMIC CHIP	0.01uF		50V
C541	1-162-974-11	CERAMIC CHIP	0.01uF		50V
C542	1-165-176-11	CERAMIC CHIP	0.047uF	10%	16V
C543	1-135-259-11	TANTAL. CHIP	10uF	20%	6.3V
C544	1-164-471-11	CERAMIC CHIP	680PF	5%	50V

Ref. No.	Part No.	Description			Remark
C545	1-162-995-11	CERAMIC CHIP	0.022uF		50V
C546	1-162-974-11	CERAMIC CHIP	0.01uF		50V
C548	1-162-970-11	CERAMIC CHIP	0.01uF	10%	25V
C549	1-162-974-11	CERAMIC CHIP	0.01uF		50V
C550	1-165-128-11	CERAMIC CHIP	0.22uF		16V
C551	1-162-974-11	CERAMIC CHIP	0.01uF		50V
C552	1-135-259-11	TANTAL. CHIP	10uF	20%	6.3V
C553	1-162-995-11	CERAMIC CHIP	0.022uF		50V
C554	1-162-964-11	CERAMIC CHIP	0.001uF	10%	50V
C555	1-162-995-11	CERAMIC CHIP	0.022uF		50V
C556	1-162-964-11	CERAMIC CHIP	0.001uF	10%	50V
C557	1-162-995-11	CERAMIC CHIP	0.022uF		50V
C558	1-164-360-11	CERAMIC CHIP	0.1uF		16V
C559	1-164-173-11	CERAMIC CHIP	0.0039uF	10%	50V
C560	1-162-964-11	CERAMIC CHIP	0.001uF	10%	50V
C561	1-162-995-11	CERAMIC CHIP	0.022uF		50V
C563	1-162-974-11	CERAMIC CHIP	0.01uF		50V
C564	1-135-259-11	TANTAL. CHIP	10uF	20%	6.3V
C565	1-162-995-11	CERAMIC CHIP	0.022uF		50V
C566	1-162-953-11	CERAMIC CHIP	100PF	5%	50V

< CONNECTOR >

CN002	1-580-789-21	PIN, CONNECTOR (SMD) 6P	
CN101	1-691-492-21	CONNECTOR, FFC/FPC 13P	
CN501	1-691-540-11	CONNECTOR, BOARD TO BOARD 40P	
CN502	1-580-789-21	PIN, CONNECTOR (SMD) 6P	
CN504	1-691-928-11	CONNECTOR, BOARD TO BOARD 32P	
* CN505	1-691-935-11	CONNECTOR, BOARD TO BOARD 38P	

< DIODE >

D073	8-719-404-46	DIODE	MA110
D120	8-719-800-76	DIODE	1SS226
D232	8-719-404-35	DIODE	MA141WK
D235	8-719-404-35	DIODE	MA141WK
D236	8-719-404-35	DIODE	MA141WK
D237	8-719-820-05	DIODE	1SS181
D239	8-719-820-05	DIODE	1SS181
D242	8-719-404-46	DIODE	MA110
D243	8-719-404-46	DIODE	MA110
D244	8-719-404-46	DIODE	MA110
D245	8-719-404-35	DIODE	MA141WK
D504	8-719-404-46	DIODE	MA110
D505	8-719-027-50	DIODE	MA142WK

< FILTER >

FL161	1-236-848-21	FILTER, LOW PASS	
FL162	1-239-010-11	FILTER, LOW PASS (CCD. PAL. Y)	
FL201	1-239-113-21	FILTER, LOW PASS (REC. Y)	
FL301	1-239-110-11	FILTER, BAND PASS	

Ref. No.	Part No.	Description	Remark
FL302	1-236-186-11	FILTER, BAND PASS	
FL303	1-579-371-11	FILTER, CERAMIC	
FL371	1-236-850-21	FILTER, BAND PASS	

< IC >

IC001	8-759-173-71	IC	CXA1555CR-E2
IC003	8-759-064-36	IC	MB88346BPFV
IC005	8-759-064-36	IC	MB88346BPFV
IC171	8-759-605-61	IC	CXA1203N
IC201	8-752-065-54	IC	CXA1207AR
IC202	8-759-636-33	IC	CXA1452
IC203	8-752-053-21	IC	CXA1211M
IC301	8-752-065-56	IC	CXA1208R
IC302	8-752-053-21	IC	CXA1211M
IC501	8-752-842-48	IC	CXP80624A-019R
IC502	8-759-169-11	IC	CXA1575M-E2
IC503	8-759-062-02	IC	MPC1720VM
IC504	8-759-059-42	IC	CXA1481AR
IC551	8-752-351-95	IC	CXL1506N

< COIL >

L001	1-412-033-11	INDUCTOR CHIP	220uH
L002	1-410-381-11	INDUCTOR CHIP	10uH
L004	1-410-385-41	INDUCTOR CHIP	22uH
L006	1-412-032-11	INDUCTOR CHIP	100uH
L007	1-412-032-11	INDUCTOR CHIP	100uH
L008	1-410-385-41	INDUCTOR CHIP	22uH
L012	1-412-029-11	INDUCTOR CHIP	10uH
L024	1-412-029-11	INDUCTOR CHIP	10uH
L025	1-412-029-11	INDUCTOR CHIP	10uH
L101	1-412-282-41	INDUCTOR	470uH
L102	1-410-657-21	INDUCTOR CHIP	180uH
L105	1-412-029-11	INDUCTOR CHIP	10uH
L116	1-412-029-11	INDUCTOR CHIP	10uH
L120	1-412-280-31	INDUCTOR	330uH
L121	1-410-387-11	INDUCTOR CHIP	33uH
L164	1-412-960-21	INDUCTOR	56uH
L202	1-412-029-11	INDUCTOR CHIP	10uH
L204	1-410-379-31	INDUCTOR CHIP	6.8uH
L205	1-410-390-11	INDUCTOR CHIP	56uH
L207	1-410-384-31	INDUCTOR CHIP	18uH
L211	1-410-381-11	INDUCTOR CHIP	10uH
L212	1-412-956-21	INDUCTOR	27uH
L214	1-410-390-11	INDUCTOR CHIP	56uH
L301	1-412-029-11	INDUCTOR CHIP	10uH
L302	1-410-393-11	INDUCTOR CHIP	100uH
L303	1-410-656-11	INDUCTOR CHIP	150uH
L304	1-410-393-11	INDUCTOR CHIP	100uH
L305	1-410-655-31	INDUCTOR CHIP	120uH

Ref. No.	Part No.	Description	Remark
L307	1-410-386-11	INDUCTOR CHIP	27uH
L308	1-410-393-11	INDUCTOR CHIP	100uH
L371	1-412-029-11	INDUCTOR CHIP	10uH
L403	1-410-655-31	INDUCTOR CHIP	120uH
L404	1-412-280-31	INDUCTOR	330uH
L405	1-410-380-31	INDUCTOR CHIP	8.2uH
L406	1-410-657-21	INDUCTOR CHIP	180uH
L407	1-410-387-11	INDUCTOR CHIP	33uH
L409	1-410-381-11	INDUCTOR CHIP	10uH
L502	1-412-029-11	INDUCTOR CHIP	10uH
L503	1-410-381-11	INDUCTOR CHIP	10uH
L504	1-410-381-11	INDUCTOR CHIP	10uH
L505	1-410-381-11	INDUCTOR CHIP	10uH
L990	1-412-026-11	INDUCTOR CHIP	1uH

< IC LINK >

⚠PS501	1-576-123-21	LINK, IC (0.8A)	

< TRANSISTOR >

Q001	8-729-140-63	TRANSISTOR	2SA1611-M5M6
Q002	8-729-140-63	TRANSISTOR	2SA1611-M5M6
Q003	8-729-216-22	TRANSISTOR	2SA1162-G
Q007	8-729-015-66	TRANSISTOR	2SC4919
Q008	8-729-015-66	TRANSISTOR	2SC4919
Q012	8-729-428-88	TRANSISTOR	UN9113
Q013	8-729-428-88	TRANSISTOR	UN9113
Q017	8-729-402-42	TRANSISTOR	UN5213
Q022	8-729-420-24	TRANSISTOR	2SB1218A-QRS
Q023	8-729-230-63	TRANSISTOR	2SC4116-YG
Q025	8-729-402-42	TRANSISTOR	UN5213
Q072	8-729-420-24	TRANSISTOR	2SB1218A-QRS
Q075	8-729-420-56	TRANSISTOR	UN511E
Q076	8-729-230-63	TRANSISTOR	2SC4116-YG
Q078	8-729-420-24	TRANSISTOR	2SB1218A-QRS
Q079	8-729-402-32	TRANSISTOR	2SD1819A-R
Q080	8-729-101-07	TRANSISTOR	2SB798-DL
Q120	8-729-230-63	TRANSISTOR	2SC4116-YG
Q121	8-729-420-12	TRANSISTOR	XN4213
Q124	8-729-102-07	TRANSISTOR	2SC2223-F13
Q125	8-729-428-88	TRANSISTOR	UN9113
Q126	8-729-012-50	TRANSISTOR	2SC4400-3/4/5
Q127	8-729-230-63	TRANSISTOR	2SC4116-YG
Q128	8-729-230-63	TRANSISTOR	2SC4116-YG
Q129	8-729-420-24	TRANSISTOR	2SB1218A-QRS
Q132	8-729-230-63	TRANSISTOR	2SC4116-YG
Q138	8-729-230-63	TRANSISTOR	2SC4116-YG
Q143	8-729-230-63	TRANSISTOR	2SC4116-YG
Q232	8-729-420-24	TRANSISTOR	2SB1218A-QRS
Q233	8-729-402-42	TRANSISTOR	UN5213

The components identified by mark ⚠ or dotted line with mark ⚠ are critical for safety. Replace only with part number specified.

Ref. No.	Part No.	Description	Remark
Q234	8-729-402-42	TRANSISTOR UN5213	
Q236	8-729-420-24	TRANSISTOR 2SB1218A-QRS	
Q237	8-729-402-42	TRANSISTOR UN5213	
Q239	8-729-420-12	TRANSISTOR XN4213	
Q241	8-729-402-42	TRANSISTOR UN5213	
Q242	8-729-402-42	TRANSISTOR UN5213	
Q243	8-729-403-35	TRANSISTOR UN5113	
Q244	8-729-807-86	TRANSISTOR 2SB1295-UL5	
Q245	8-729-402-42	TRANSISTOR UN5213	
Q246	8-729-425-64	TRANSISTOR 2SD2216-Q	
Q247	8-729-402-81	TRANSISTOR XN4501	
Q248	8-729-420-20	TRANSISTOR XN4312	
Q250	8-729-230-63	TRANSISTOR 2SC4116-YG	
Q252	8-729-428-88	TRANSISTOR UN9113	
Q254	8-729-420-24	TRANSISTOR 2SB1218A-QRS	
Q255	8-729-425-64	TRANSISTOR 2SD2216-Q	
Q256	8-729-230-63	TRANSISTOR 2SC4116-YG	
Q257	8-729-230-63	TRANSISTOR 2SC4116-YG	
Q258	8-729-425-50	TRANSISTOR 2SB1462-Q	
Q265	8-729-402-42	TRANSISTOR UN5213	
Q267	8-729-402-42	TRANSISTOR UN5213	
Q270	8-729-428-88	TRANSISTOR UN9113	
Q271	8-729-420-24	TRANSISTOR 2SB1218A-QRS	
Q273	8-729-402-42	TRANSISTOR UN5213	
Q275	8-729-427-72	TRANSISTOR XP4501	
Q276	8-729-230-63	TRANSISTOR 2SC4116-YG	
Q280	8-729-230-63	TRANSISTOR 2SC4116-YG	
Q281	8-729-421-90	TRANSISTOR XN4113	
Q282	8-729-402-42	TRANSISTOR UN5213	
Q283	8-729-230-63	TRANSISTOR 2SC4116-YG	
Q287	8-729-402-42	TRANSISTOR UN5213	
Q289	8-729-402-42	TRANSISTOR UN5213	
Q290	8-729-230-63	TRANSISTOR 2SC4116-YG	
Q291	8-729-420-24	TRANSISTOR 2SB1218A-QRS	
Q292	8-729-230-63	TRANSISTOR 2SC4116-YG	
Q293	8-729-402-42	TRANSISTOR UN5213	
Q294	8-729-230-63	TRANSISTOR 2SC4116-YG	
Q295	8-729-420-24	TRANSISTOR 2SB1218A-QRS	
Q296	8-729-402-42	TRANSISTOR UN5213	
Q297	8-729-403-35	TRANSISTOR UN5113	
Q298	8-729-230-63	TRANSISTOR 2SC4116-YG	
Q299	8-729-230-63	TRANSISTOR 2SC4116-YG	
Q301	8-729-230-63	TRANSISTOR 2SC4116-YG	
Q302	8-729-403-35	TRANSISTOR UN5113	
Q303	8-729-230-63	TRANSISTOR 2SC4116-YG	
Q305	8-729-230-63	TRANSISTOR 2SC4116-YG	
Q307	8-729-402-42	TRANSISTOR UN5213	
Q501	8-729-420-12	TRANSISTOR XN4213	
Q502	8-729-421-90	TRANSISTOR XN4113	

Ref. No.	Part No.	Description	Remark
Q503	8-729-230-63	TRANSISTOR 2SC4116-YG	
Q513	8-729-017-67	TRANSISTOR 2SB1574	
Q514	8-729-403-35	TRANSISTOR UN5113	
Q905	8-729-230-63	TRANSISTOR 2SC4116-YG	

< RESISTOR >

Ref. No.	Part No.	Description	Remark
R001	1-216-837-11	METAL CHIP 22K 5%	1/16W
R002	1-216-839-11	METAL CHIP 33K 5%	1/16W
R003	1-216-814-11	METAL CHIP 270 5%	1/16W
R004	1-216-813-11	METAL CHIP 220 5%	1/16W
R005	1-216-825-11	METAL CHIP 2.2K 5%	1/16W
R006	1-216-829-11	METAL CHIP 4.7K 5%	1/16W
R007	1-216-805-11	METAL CHIP 47 5%	1/16W
R008	1-216-804-11	METAL CHIP 39 5%	1/16W
R009	1-216-818-11	METAL CHIP 560 5%	1/16W
R011	1-216-864-11	METAL CHIP 0 5%	1/16W
R012	1-216-833-11	METAL CHIP 10K 5%	1/16W
R013	1-216-833-11	METAL CHIP 10K 5%	1/16W
R020	1-216-809-11	METAL CHIP 100 5%	1/16W
R022	1-216-823-11	METAL CHIP 1.5K 5%	1/16W
R023	1-216-827-11	METAL CHIP 3.3K 5%	1/16W
R025	1-216-821-11	METAL CHIP 1K 5%	1/16W
R026	1-216-821-11	METAL CHIP 1K 5%	1/16W
R027	1-216-809-11	METAL CHIP 100 5%	1/16W
R028	1-216-837-11	METAL CHIP 22K 5%	1/16W
R029	1-216-837-11	METAL CHIP 22K 5%	1/16W
R030	1-216-837-11	METAL CHIP 22K 5%	1/16W
R031	1-216-821-11	METAL CHIP 1K 5%	1/16W
R032	1-216-821-11	METAL CHIP 1K 5%	1/16W
R035	1-216-815-11	METAL CHIP 330 5%	1/16W
R036	1-216-815-11	METAL CHIP 330 5%	1/16W
R037	1-216-864-11	METAL CHIP 0 5%	1/16W
R039	1-216-836-11	METAL CHIP 18K 5%	1/16W
R040	1-216-833-11	METAL CHIP 10K 5%	1/16W
R041	1-216-836-11	METAL CHIP 18K 5%	1/16W
R042	1-216-832-11	METAL CHIP 8.2K 5%	1/16W
R050	1-216-833-11	METAL CHIP 10K 5%	1/16W
R051	1-216-833-11	METAL CHIP 10K 5%	1/16W
R053	1-216-819-11	METAL CHIP 680 5%	1/16W
R054	1-216-809-11	METAL CHIP 100 5%	1/16W
R055	1-216-837-11	METAL CHIP 22K 5%	1/16W
R056	1-216-864-11	METAL CHIP 0 5%	1/16W
R057	1-216-837-11	METAL CHIP 22K 5%	1/16W
R062	1-216-864-11	METAL CHIP 0 5%	1/16W
R063	1-216-864-11	METAL CHIP 0 5%	1/16W
R066	1-216-864-11	METAL CHIP 0 5%	1/16W
R067	1-216-864-11	METAL CHIP 0 5%	1/16W
R068	1-216-864-11	METAL CHIP 0 5%	1/16W
R071	1-216-837-11	METAL CHIP 22K 5%	1/16W

Ref. No.	Part No.	Description	Remark
R082	1-216-864-11	METAL CHIP 0 5%	1/16W
R083	1-216-864-11	METAL CHIP 0 5%	1/16W
R094	1-216-821-11	METAL CHIP 1K 5%	1/16W
R097	1-216-825-11	METAL CHIP 2.2K 5%	1/16W
R098	1-216-829-11	METAL CHIP 4.7K 5%	1/16W
R099	1-216-823-11	METAL CHIP 1.5K 5%	1/16W
R100	1-216-833-11	METAL CHIP 10K 5%	1/16W
R101	1-216-829-11	METAL CHIP 4.7K 5%	1/16W
R102	1-216-817-11	METAL CHIP 470 5%	1/16W
R103	1-216-843-11	METAL CHIP 68K 5%	1/16W
R105	1-216-829-11	METAL CHIP 4.7K 5%	1/16W
R106	1-216-820-11	METAL CHIP 820 5%	1/16W
R107	1-216-836-11	METAL CHIP 18K 5%	1/16W
R108	1-216-830-11	METAL CHIP 5.6K 5%	1/16W
R109	1-216-304-11	METAL CHIP 3.3 5%	1/10W
R110	1-216-296-00	METAL CHIP 0 5%	1/8W
R117	1-216-864-11	METAL CHIP 0 5%	1/16W
R120	1-216-827-11	METAL CHIP 3.3K 5%	1/16W
R122	1-216-831-11	METAL CHIP 6.8K 5%	1/16W
R123	1-216-864-11	METAL CHIP 0 5%	1/16W
R124	1-216-834-11	METAL CHIP 12K 5%	1/16W
R125	1-216-833-11	METAL CHIP 10K 5%	1/16W
R126	1-216-825-11	METAL CHIP 2.2K 5%	1/16W
R127	1-216-815-11	METAL CHIP 330 5%	1/16W
R128	1-216-818-11	METAL CHIP 560 5%	1/16W
R129	1-216-818-11	METAL CHIP 560 5%	1/16W
R130	1-216-817-11	METAL CHIP 470 5%	1/16W
R131	1-216-807-11	METAL CHIP 68 5%	1/16W
R132	1-216-830-11	METAL CHIP 5.6K 5%	1/16W
R133	1-216-824-11	METAL CHIP 1.8K 5%	1/16W
R134	1-216-831-11	METAL CHIP 6.8K 5%	1/16W
R135	1-216-823-11	METAL CHIP 1.5K 5%	1/16W
R137	1-216-837-11	METAL CHIP 22K 5%	1/16W
R138	1-216-837-11	METAL CHIP 22K 5%	1/16W
R139	1-216-821-11	METAL CHIP 1K 5%	1/16W
R140	1-216-817-11	METAL CHIP 470 5%	1/16W
R141	1-216-817-11	METAL CHIP 470 5%	1/16W
R142	1-216-809-11	METAL CHIP 100 5%	1/16W
R143	1-216-817-11	METAL CHIP 470 5%	1/16W
R145	1-216-836-11	METAL CHIP 18K 5%	1/16W
R146	1-216-836-11	METAL CHIP 18K 5%	1/16W
R147	1-216-818-11	METAL CHIP 560 5%	1/16W
R148	1-216-821-11	METAL CHIP 1K 5%	1/16W
R149	1-216-804-11	METAL CHIP 39 5%	1/16W
R151	1-216-820-11	METAL CHIP 820 5%	1/16W
R152	1-216-819-11	METAL CHIP 680 5%	1/16W
R153	1-216-824-11	METAL CHIP 1.8K 5%	1/16W
R156	1-216-825-11	METAL CHIP 2.2K 5%	1/16W

Ref. No.	Part No.	Description	Remark
R163	1-216-819-11	METAL CHIP 680 5%	1/16W
R164	1-216-837-11	METAL CHIP 22K 5%	1/16W
R165	1-216-837-11	METAL CHIP 22K 5%	1/16W
R170	1-216-813-11	METAL CHIP 220 5%	1/16W
R176	1-216-818-11	METAL CHIP 560 5%	1/16W
R197	1-216-864-11	METAL CHIP 0 5%	1/16W
R214	1-216-819-11	METAL CHIP 680 5%	1/16W
R218	1-216-813-11	METAL CHIP 220 5%	1/16W
R220	1-216-864-11	METAL CHIP 0 5%	1/16W
R225	1-216-864-11	METAL CHIP 0 5%	1/16W
R230	1-216-817-11	METAL CHIP 470 5%	1/16W
R231	1-216-864-11	METAL CHIP 0 5%	1/16W
R234	1-216-828-11	METAL CHIP 3.9K 5%	1/16W
R236	1-216-296-00	METAL CHIP 0 5%	1/8W
R237	1-216-817-11	METAL CHIP 470 5%	1/16W
R241	1-216-804-11	METAL CHIP 39 5%	1/16W
R242	1-216-818-11	METAL CHIP 560 5%	1/16W
R243	1-216-864-11	METAL CHIP 0 5%	1/16W
R244	1-216-820-11	METAL CHIP 820 5%	1/16W
R245	1-216-841-11	METAL CHIP 47K 5%	1/16W
R246	1-216-803-11	METAL CHIP 33 5%	1/16W
R249	1-216-833-11	METAL CHIP 10K 5%	1/16W
R250	1-216-829-11	METAL CHIP 4.7K 5%	1/16W
R252	1-216-864-11	METAL CHIP 0 5%	1/16W
R254	1-216-818-11	METAL CHIP 560 5%	1/16W
R255	1-216-826-11	METAL CHIP 2.7K 5%	1/16W
R256	1-216-821-11	METAL CHIP 1K 5%	1/16W
R257	1-216-827-11	METAL CHIP 3.3K 5%	1/16W
R258	1-216-829-11	METAL CHIP 4.7K 5%	1/16W
R259	1-216-845-11	METAL CHIP 100K 5%	1/16W
R260	1-216-833-11	METAL CHIP 10K 5%	1/16W
R261	1-216-864-11	METAL CHIP 0 5%	1/16W
R262	1-216-821-11	METAL CHIP 1K 5%	1/16W
R264	1-216-839-11	METAL CHIP 33K 5%	1/16W
R265	1-216-820-11	METAL CHIP 820 5%	1/16W
R266	1-216-819-11	METAL CHIP 680 5%	1/16W
R267	1-216-845-11	METAL CHIP 100K 5%	1/16W
R268	1-216-853-11	METAL CHIP 470K 5%	1/16W
R269	1-216-817-11	METAL CHIP 470 5%	1/16W
R270	1-216-827-11	METAL CHIP 3.3K 5%	1/16W
R271	1-216-864-11	METAL CHIP 0 5%	1/16W
R273	1-216-829-11	METAL CHIP 4.7K 5%	1/16W
R274	1-216-821-11	METAL CHIP 1K 5%	1/16W
R277	1-216-836-11	METAL CHIP 18K 5%	1/16W
R278	1-216-842-11	METAL CHIP 56K 5%	1/16W
R279	1-216-841-11	METAL CHIP 47K 5%	1/16W
R280	1-216-833-11	METAL CHIP 10K 5%	1/16W
R281	1-216-827-11	METAL CHIP 3.3K 5%	1/16W
R282	1-216-857-11	METAL CHIP 1M 5%	1/16W

Ref. No.	Part No.	Description			Remark
R283	1-216-834-11	METAL CHIP	12K	5%	1/16W
R284	1-216-821-11	METAL CHIP	1K	5%	1/16W
R288	1-216-810-11	METAL CHIP	120	5%	1/16W
R289	1-216-844-11	METAL CHIP	82K	5%	1/16W
R290	1-216-837-11	METAL CHIP	22K	5%	1/16W
R294	1-216-830-11	METAL CHIP	5.6K	5%	1/16W
R295	1-216-864-11	METAL CHIP	0	5%	1/16W
R296	1-216-833-11	METAL CHIP	10K	5%	1/16W
R297	1-216-813-11	METAL CHIP	220	5%	1/16W
R298	1-216-813-11	METAL CHIP	220	5%	1/16W
R299	1-216-814-11	METAL CHIP	270	5%	1/16W
R301	1-216-816-11	METAL CHIP	390	5%	1/16W
R302	1-216-841-11	METAL CHIP	47K	5%	1/16W
R303	1-216-833-11	METAL CHIP	10K	5%	1/16W
R304	1-216-864-11	METAL CHIP	0	5%	1/16W
R306	1-216-826-11	METAL CHIP	2.7K	5%	1/16W
R307	1-216-864-11	METAL CHIP	0	5%	1/16W
R308	1-216-864-11	METAL CHIP	0	5%	1/16W
R309	1-216-833-11	METAL CHIP	10K	5%	1/16W
R310	1-216-839-11	METAL CHIP	33K	5%	1/16W
R311	1-216-842-11	METAL CHIP	56K	5%	1/16W
R312	1-216-822-11	METAL CHIP	1.2K	5%	1/16W
R314	1-216-817-11	METAL CHIP	470	5%	1/16W
R315	1-216-821-11	METAL CHIP	1K	5%	1/16W
R316	1-216-821-11	METAL CHIP	1K	5%	1/16W
R317	1-216-833-11	METAL CHIP	10K	5%	1/16W
R318	1-216-810-11	METAL CHIP	120	5%	1/16W
R319	1-216-819-11	METAL CHIP	680	5%	1/16W
R320	1-216-815-11	METAL CHIP	330	5%	1/16W
R321	1-216-841-11	METAL CHIP	47K	5%	1/16W
R323	1-216-835-11	METAL CHIP	15K	5%	1/16W
R324	1-216-825-11	METAL CHIP	2.2K	5%	1/16W
R325	1-216-825-11	METAL CHIP	2.2K	5%	1/16W
R327	1-218-704-11	METAL CHIP	3.3K	0.50%	1/16W
R328	1-216-821-11	METAL CHIP	1K	5%	1/16W
R329	1-216-821-11	METAL CHIP	1K	5%	1/16W
R330	1-216-825-11	METAL CHIP	2.2K	5%	1/16W
R331	1-216-819-11	METAL CHIP	680	5%	1/16W
R333	1-216-820-11	METAL CHIP	820	5%	1/16W
R335	1-216-820-11	METAL CHIP	820	5%	1/16W
R336	1-216-837-11	METAL CHIP	22K	5%	1/16W
R339	1-216-817-11	METAL CHIP	470	5%	1/16W
R342	1-216-817-11	METAL CHIP	470	5%	1/16W
R343	1-216-864-11	METAL CHIP	0	5%	1/16W
R350	1-216-864-11	METAL CHIP	0	5%	1/16W
R351	1-216-864-11	METAL CHIP	0	5%	1/16W
R354	1-216-818-11	METAL CHIP	560	5%	1/16W
R355	1-216-816-11	METAL CHIP	390	5%	1/16W
R362	1-216-837-11	METAL CHIP	22K	5%	1/16W

Ref. No.	Part No.	Description			Remark
R365	1-216-864-11	METAL CHIP	0	5%	1/16W
R368	1-216-839-11	METAL CHIP	33K	5%	1/16W
R369	1-216-842-11	METAL CHIP	56K	5%	1/16W
R370	1-216-821-11	METAL CHIP	1K	5%	1/16W
R371	1-216-821-11	METAL CHIP	1K	5%	1/16W
R372	1-216-817-11	METAL CHIP	470	5%	1/16W
R376	1-216-812-11	METAL CHIP	180	5%	1/16W
R377	1-216-817-11	METAL CHIP	470	5%	1/16W
R378	1-216-821-11	METAL CHIP	1K	5%	1/16W
R379	1-216-826-11	METAL CHIP	2.7K	5%	1/16W
R380	1-216-833-11	METAL CHIP	10K	5%	1/16W
R382	1-216-827-11	METAL CHIP	3.3K	5%	1/16W
R383	1-216-814-11	METAL CHIP	270	5%	1/16W
R384	1-216-813-11	METAL CHIP	220	5%	1/16W
R385	1-216-864-11	METAL CHIP	0	5%	1/16W
R386	1-216-813-11	METAL CHIP	220	5%	1/16W
R389	1-216-825-11	METAL CHIP	2.2K	5%	1/16W
R390	1-216-825-11	METAL CHIP	2.2K	5%	1/16W
R395	1-216-864-11	METAL CHIP	0	5%	1/16W
R396	1-216-833-11	METAL CHIP	10K	5%	1/16W
R397	1-216-840-11	METAL CHIP	39K	5%	1/16W
R399	1-216-825-11	METAL CHIP	2.2K	5%	1/16W
R400	1-216-864-11	METAL CHIP	0	5%	1/16W
R401	1-216-841-11	METAL CHIP	47K	5%	1/16W
R403	1-216-825-11	METAL CHIP	2.2K	5%	1/16W
R406	1-216-821-11	METAL CHIP	1K	5%	1/16W
R407	1-216-821-11	METAL CHIP	1K	5%	1/16W
R408	1-216-821-11	METAL CHIP	1K	5%	1/16W
R409	1-216-825-11	METAL CHIP	2.2K	5%	1/16W
R410	1-216-813-11	METAL CHIP	220	5%	1/16W
R413	1-216-833-11	METAL CHIP	10K	5%	1/16W
R416	1-216-864-11	METAL CHIP	0	5%	1/16W
R418	1-216-833-11	METAL CHIP	10K	5%	1/16W
R419	1-216-864-11	METAL CHIP	0	5%	1/16W
R420	1-216-864-11	METAL CHIP	0	5%	1/16W
R421	1-216-825-11	METAL CHIP	2.2K	5%	1/16W
R422	1-216-833-11	METAL CHIP	10K	5%	1/16W
R423	1-216-825-11	METAL CHIP	2.2K	5%	1/16W
R424	1-216-821-11	METAL CHIP	1K	5%	1/16W
R428	1-216-833-11	METAL CHIP	10K	5%	1/16W
R429	1-216-829-11	METAL CHIP	4.7K	5%	1/16W
R430	1-216-845-11	METAL CHIP	100K	5%	1/16W
R432	1-216-822-11	METAL CHIP	1.2K	5%	1/16W
R433	1-216-845-11	METAL CHIP	100K	5%	1/16W
R434	1-216-833-11	METAL CHIP	10K	5%	1/16W
R435	1-216-833-11	METAL CHIP	10K	5%	1/16W
R438	1-216-845-11	METAL CHIP	100K	5%	1/16W
R439	1-216-824-11	METAL CHIP	1.8K	5%	1/16W
R440	1-216-822-11	METAL CHIP	1.2K	5%	1/16W

Ref. No.	Part No.	Description			Remark
R441	1-216-823-11	METAL CHIP	1.5K	5%	1/16W
R442	1-216-827-11	METAL CHIP	3.3K	5%	1/16W
R443	1-216-845-11	METAL CHIP	100K	5%	1/16W
R444	1-216-832-11	METAL CHIP	8.2K	5%	1/16W
R445	1-216-823-11	METAL CHIP	1.5K	5%	1/16W
R446	1-216-825-11	METAL CHIP	2.2K	5%	1/16W
R447	1-216-834-11	METAL CHIP	12K	5%	1/16W
R448	1-216-830-11	METAL CHIP	5.6K	5%	1/16W
R449	1-216-845-11	METAL CHIP	100K	5%	1/16W
R450	1-216-818-11	METAL CHIP	560	5%	1/16W
R452	1-216-829-11	METAL CHIP	4.7K	5%	1/16W
R453	1-216-845-11	METAL CHIP	100K	5%	1/16W
R454	1-216-821-11	METAL CHIP	1K	5%	1/16W
R455	1-216-827-11	METAL CHIP	3.3K	5%	1/16W
R456	1-216-825-11	METAL CHIP	2.2K	5%	1/16W
R458	1-216-821-11	METAL CHIP	1K	5%	1/16W
R459	1-216-839-11	METAL CHIP	33K	5%	1/16W
R460	1-216-833-11	METAL CHIP	10K	5%	1/16W
R461	1-216-820-11	METAL CHIP	820	5%	1/16W
R462	1-216-817-11	METAL CHIP	470	5%	1/16W
R463	1-216-821-11	METAL CHIP	1K	5%	1/16W
R464	1-216-829-11	METAL CHIP	4.7K	5%	1/16W
R465	1-216-864-11	METAL CHIP	0	5%	1/16W
R466	1-216-840-11	METAL CHIP	39K	5%	1/16W
R467	1-216-829-11	METAL CHIP	4.7K	5%	1/16W
R468	1-216-833-11	METAL CHIP	10K	5%	1/16W
R469	1-216-825-11	METAL CHIP	2.2K	5%	1/16W
R470	1-216-833-11	METAL CHIP	10K	5%	1/16W
R473	1-216-825-11	METAL CHIP	2.2K	5%	1/16W
R475	1-216-829-11	METAL CHIP	4.7K	5%	1/16W
R476	1-216-830-11	METAL CHIP	5.6K	5%	1/16W
R477	1-216-830-11	METAL CHIP	5.6K	5%	1/16W
R478	1-216-828-11	METAL CHIP	3.9K	5%	1/16W
R479	1-216-817-11	METAL CHIP	470	5%	1/16W
R480	1-216-830-11	METAL CHIP	5.6K	5%	1/16W
R481	1-216-829-11	METAL CHIP	4.7K	5%	1/16W
R489	1-216-809-11	METAL CHIP	100	5%	1/16W
R490	1-216-809-11	METAL CHIP	100	5%	1/16W
R512	1-216-821-11	METAL CHIP	1K	5%	1/16W
R513	1-216-841-11	METAL CHIP	47K	5%	1/16W
R514	1-216-841-11	METAL CHIP	47K	5%	1/16W
R515	1-216-841-11	METAL CHIP	47K	5%	1/16W
R516	1-216-841-11	METAL CHIP	47K	5%	1/16W
R517	1-216-841-11	METAL CHIP	47K	5%	1/16W
R518	1-216-841-11	METAL CHIP	47K	5%	1/16W
R519	1-216-841-11	METAL CHIP	47K	5%	1/16W
R520	1-216-864-11	METAL CHIP	0	5%	1/16W
R521	1-216-821-11	METAL CHIP	1K	5%	1/16W

Ref. No.	Part No.	Description			Remark
R522	1-216-864-11	METAL CHIP	0	5%	1/16W
R523	1-216-833-11	METAL CHIP	10K	5%	1/16W
R524	1-216-821-11	METAL CHIP	1K	5%	1/16W
R525	1-216-809-11	METAL CHIP	100	5%	1/16W
R526	1-216-829-11	METAL CHIP	4.7K	5%	1/16W
R528	1-216-829-11	METAL CHIP	4.7K	5%	1/16W
R529	1-216-864-11	METAL CHIP	0	5%	1/16W
R530	1-216-829-11	METAL CHIP	4.7K	5%	1/16W
R531	1-216-829-11	METAL CHIP	4.7K	5%	1/16W
R532	1-216-829-11	METAL CHIP	4.7K	5%	1/16W
R533	1-216-829-11	METAL CHIP	4.7K	5%	1/16W
R534	1-216-829-11	METAL CHIP	4.7K	5%	1/16W
R535	1-216-829-11	METAL CHIP	4.7K	5%	1/16W
R536	1-216-821-11	METAL CHIP	1K	5%	1/16W
R537	1-216-821-11	METAL CHIP	1K	5%	1/16W
R538	1-216-821-11	METAL CHIP	1K	5%	1/16W
R539	1-216-817-11	METAL CHIP	470	5%	1/16W
R540	1-216-821-11	METAL CHIP	1K	5%	1/16W
R541	1-216-817-11	METAL CHIP	470	5%	1/16W
R542	1-216-841-11	METAL CHIP	47K	5%	1/16W
R546	1-216-817-11	METAL CHIP	470	5%	1/16W
R547	1-216-845-11	METAL CHIP	100K	5%	1/16W
R548	1-216-827-11	METAL CHIP	3.3K	5%	1/16W
R552	1-216-833-11	METAL CHIP	10K	5%	1/16W
R553	1-216-845-11	METAL CHIP	100K	5%	1/16W
R554	1-216-857-11	METAL CHIP	1M	5%	1/16W
R555	1-216-852-11	METAL CHIP	390K	5%	1/16W
R556	1-216-019-00	METAL CHIP	56	5%	1/10W
R557	1-216-817-11	METAL CHIP	470	5%	1/16W
R558	1-216-826-11	METAL CHIP	2.7K	5%	1/16W
R559	1-216-833-11	METAL CHIP	10K	5%	1/16W
R560	1-216-829-11	METAL CHIP	4.7K	5%	1/16W
R561	1-216-850-11	METAL CHIP	270K	5%	1/16W
R562	1-216-831-11	METAL CHIP	6.8K	5%	1/16W
R563	1-216-835-11	METAL CHIP	15K	5%	1/16W
R564	1-216-809-11	METAL CHIP	100	5%	1/16W
R566	1-217-671-11	METAL CHIP	1	5%	1/10W
R567	1-217-671-11	METAL CHIP	1	5%	1/10W
R568	1-217-671-11	METAL CHIP	1	5%	1/10W
R569	1-217-671-11	METAL CHIP	1	5%	1/10W
R570	1-216-833-11	METAL CHIP	10K	5%	1/16W
R571	1-216-821-11	METAL CHIP	1K	5%	1/16W
R573	1-216-845-11	METAL CHIP	100K	5%	1/16W
R574	1-216-845-11	METAL CHIP	100K	5%	1/16W
R577	1-216-817-11	METAL CHIP	470	5%	1/16W
R578	1-216-837-11	METAL CHIP	22K	5%	1/16W
R580	1-216-821-11	METAL CHIP	1K	5%	1/16W
R581	1-216-821-11	METAL CHIP	1K	5%	1/16W
R583	1-216-837-11	METAL CHIP	22K	5%	1/16W

Ref. No.	Part No.	Description			Remark
R283	1-216-834-11	METAL CHIP	12K	5%	1/16W
R284	1-216-821-11	METAL CHIP	1K	5%	1/16W
R288	1-216-810-11	METAL CHIP	120	5%	1/16W
R289	1-216-844-11	METAL CHIP	82K	5%	1/16W
R290	1-216-837-11	METAL CHIP	22K	5%	1/16W
R294	1-216-830-11	METAL CHIP	5.6K	5%	1/16W
R295	1-216-864-11	METAL CHIP	0	5%	1/16W
R296	1-216-833-11	METAL CHIP	10K	5%	1/16W
R297	1-216-813-11	METAL CHIP	220	5%	1/16W
R298	1-216-813-11	METAL CHIP	220	5%	1/16W
R299	1-216-814-11	METAL CHIP	270	5%	1/16W
R301	1-216-816-11	METAL CHIP	390	5%	1/16W
R302	1-216-841-11	METAL CHIP	47K	5%	1/16W
R303	1-216-833-11	METAL CHIP	10K	5%	1/16W
R304	1-216-864-11	METAL CHIP	0	5%	1/16W
R306	1-216-826-11	METAL CHIP	2.7K	5%	1/16W
R307	1-216-864-11	METAL CHIP	0	5%	1/16W
R308	1-216-864-11	METAL CHIP	0	5%	1/16W
R309	1-216-833-11	METAL CHIP	10K	5%	1/16W
R310	1-216-839-11	METAL CHIP	33K	5%	1/16W
R311	1-216-842-11	METAL CHIP	56K	5%	1/16W
R312	1-216-822-11	METAL CHIP	1.2K	5%	1/16W
R314	1-216-817-11	METAL CHIP	470	5%	1/16W
R315	1-216-821-11	METAL CHIP	1K	5%	1/16W
R316	1-216-821-11	METAL CHIP	1K	5%	1/16W
R317	1-216-833-11	METAL CHIP	10K	5%	1/16W
R318	1-216-810-11	METAL CHIP	120	5%	1/16W
R319	1-216-819-11	METAL CHIP	680	5%	1/16W
R320	1-216-815-11	METAL CHIP	330	5%	1/16W
R321	1-216-841-11	METAL CHIP	47K	5%	1/16W
R323	1-216-835-11	METAL CHIP	15K	5%	1/16W
R324	1-216-825-11	METAL CHIP	2.2K	5%	1/16W
R325	1-216-825-11	METAL CHIP	2.2K	5%	1/16W
R327	1-218-704-11	METAL CHIP	3.3K	0.50%	1/16W
R328	1-216-821-11	METAL CHIP	1K	5%	1/16W
R329	1-216-821-11	METAL CHIP	1K	5%	1/16W
R330	1-216-825-11	METAL CHIP	2.2K	5%	1/16W
R331	1-216-819-11	METAL CHIP	680	5%	1/16W
R333	1-216-820-11	METAL CHIP	820	5%	1/16W
R335	1-216-820-11	METAL CHIP	820	5%	1/16W
R336	1-216-837-11	METAL CHIP	22K	5%	1/16W
R339	1-216-817-11	METAL CHIP	470	5%	1/16W
R342	1-216-817-11	METAL CHIP	470	5%	1/16W
R343	1-216-864-11	METAL CHIP	0	5%	1/16W
R350	1-216-864-11	METAL CHIP	0	5%	1/16W
R351	1-216-864-11	METAL CHIP	0	5%	1/16W
R354	1-216-818-11	METAL CHIP	560	5%	1/16W
R355	1-216-816-11	METAL CHIP	390	5%	1/16W
R362	1-216-837-11	METAL CHIP	22K	5%	1/16W

Ref. No.	Part No.	Description			Remark
R365	1-216-864-11	METAL CHIP	0	5%	1/16W
R368	1-216-839-11	METAL CHIP	33K	5%	1/16W
R369	1-216-842-11	METAL CHIP	56K	5%	1/16W
R370	1-216-821-11	METAL CHIP	1K	5%	1/16W
R371	1-216-821-11	METAL CHIP	1K	5%	1/16W
R372	1-216-817-11	METAL CHIP	470	5%	1/16W
R376	1-216-812-11	METAL CHIP	180	5%	1/16W
R377	1-216-817-11	METAL CHIP	470	5%	1/16W
R378	1-216-821-11	METAL CHIP	1K	5%	1/16W
R379	1-216-826-11	METAL CHIP	2.7K	5%	1/16W
R380	1-216-833-11	METAL CHIP	10K	5%	1/16W
R382	1-216-827-11	METAL CHIP	3.3K	5%	1/16W
R383	1-216-814-11	METAL CHIP	270	5%	1/16W
R384	1-216-813-11	METAL CHIP	220	5%	1/16W
R385	1-216-864-11	METAL CHIP	0	5%	1/16W
R386	1-216-813-11	METAL CHIP	220	5%	1/16W
R389	1-216-825-11	METAL CHIP	2.2K	5%	1/16W
R390	1-216-825-11	METAL CHIP	2.2K	5%	1/16W
R395	1-216-864-11	METAL CHIP	0	5%	1/16W
R396	1-216-833-11	METAL CHIP	10K	5%	1/16W
R397	1-216-840-11	METAL CHIP	39K	5%	1/16W
R399	1-216-825-11	METAL CHIP	2.2K	5%	1/16W
R400	1-216-864-11	METAL CHIP	0	5%	1/16W
R401	1-216-841-11	METAL CHIP	47K	5%	1/16W
R403	1-216-825-11	METAL CHIP	2.2K	5%	1/16W
R406	1-216-821-11	METAL CHIP	1K	5%	1/16W
R407	1-216-821-11	METAL CHIP	1K	5%	1/16W
R408	1-216-821-11	METAL CHIP	1K	5%	1/16W
R409	1-216-825-11	METAL CHIP	2.2K	5%	1/16W
R410	1-216-813-11	METAL CHIP	220	5%	1/16W
R413	1-216-833-11	METAL CHIP	10K	5%	1/16W
R416	1-216-864-11	METAL CHIP	0	5%	1/16W
R418	1-216-833-11	METAL CHIP	10K	5%	1/16W
R419	1-216-864-11	METAL CHIP	0	5%	1/16W
R420	1-216-864-11	METAL CHIP	0	5%	1/16W
R421	1-216-825-11	METAL CHIP	2.2K	5%	1/16W
R422	1-216-833-11	METAL CHIP	10K	5%	1/16W
R423	1-216-825-11	METAL CHIP	2.2K	5%	1/16W
R424	1-216-821-11	METAL CHIP	1K	5%	1/16W
R428	1-216-833-11	METAL CHIP	10K	5%	1/16W
R429	1-216-829-11	METAL CHIP	4.7K	5%	1/16W
R430	1-216-845-11	METAL CHIP	100K	5%	1/16W
R432	1-216-822-11	METAL CHIP	1.2K	5%	1/16W
R433	1-216-845-11	METAL CHIP	100K	5%	1/16W
R434	1-216-833-11	METAL CHIP	10K	5%	1/16W
R435	1-216-833-11	METAL CHIP	10K	5%	1/16W
R438	1-216-845-11	METAL CHIP	100K	5%	1/16W
R439	1-216-824-11	METAL CHIP	1.8K	5%	1/16W
R440	1-216-822-11	METAL CHIP	1.2K	5%	1/16W

Ref. No.	Part No.	Description			Remark
R441	1-216-823-11	METAL CHIP	1.5K	5%	1/16W
R442	1-216-827-11	METAL CHIP	3.3K	5%	1/16W
R443	1-216-845-11	METAL CHIP	100K	5%	1/16W
R444	1-216-832-11	METAL CHIP	8.2K	5%	1/16W
R445	1-216-823-11	METAL CHIP	1.5K	5%	1/16W
R446	1-216-825-11	METAL CHIP	2.2K	5%	1/16W
R447	1-216-834-11	METAL CHIP	12K	5%	1/16W
R448	1-216-830-11	METAL CHIP	5.6K	5%	1/16W
R449	1-216-845-11	METAL CHIP	100K	5%	1/16W
R450	1-216-818-11	METAL CHIP	560	5%	1/16W
R452	1-216-829-11	METAL CHIP	4.7K	5%	1/16W
R453	1-216-845-11	METAL CHIP	100K	5%	1/16W
R454	1-216-821-11	METAL CHIP	1K	5%	1/16W
R455	1-216-827-11	METAL CHIP	3.3K	5%	1/16W
R456	1-216-825-11	METAL CHIP	2.2K	5%	1/16W
R458	1-216-821-11	METAL CHIP	1K	5%	1/16W
R459	1-216-839-11	METAL CHIP	33K	5%	1/16W
R460	1-216-833-11	METAL CHIP	10K	5%	1/16W
R461	1-216-820-11	METAL CHIP	820	5%	1/16W
R462	1-216-817-11	METAL CHIP	470	5%	1/16W
R463	1-216-821-11	METAL CHIP	1K	5%	1/16W
R464	1-216-829-11	METAL CHIP	4.7K	5%	1/16W
R465	1-216-864-11	METAL CHIP	0	5%	1/16W
R466	1-216-840-11	METAL CHIP	39K	5%	1/16W
R467	1-216-829-11	METAL CHIP	4.7K	5%	1/16W
R468	1-216-833-11	METAL CHIP	10K	5%	1/16W
R469	1-216-825-11	METAL CHIP	2.2K	5%	1/16W
R470	1-216-833-11	METAL CHIP	10K	5%	1/16W
R473	1-216-825-11	METAL CHIP	2.2K	5%	1/16W
R475	1-216-829-11	METAL CHIP	4.7K	5%	1/16W
R476	1-216-830-11	METAL CHIP	5.6K	5%	1/16W
R477	1-216-830-11	METAL CHIP	5.6K	5%	1/16W
R478	1-216-828-11	METAL CHIP	3.9K	5%	1/16W
R479	1-216-817-11	METAL CHIP	470	5%	1/16W
R480	1-216-830-11	METAL CHIP	5.6K	5%	1/16W
R481	1-216-829-11	METAL CHIP	4.7K	5%	1/16W
R489	1-216-809-11	METAL CHIP	100	5%	1/16W
R490	1-216-809-11	METAL CHIP	100	5%	1/16W
R512	1-216-821-11	METAL CHIP	1K	5%	1/16W
R513	1-216-841-11	METAL CHIP	47K	5%	1/16W
R514	1-216-841-11	METAL CHIP	47K	5%	1/16W
R515	1-216-841-11	METAL CHIP	47K	5%	1/16W
R516	1-216-841-11	METAL CHIP	47K	5%	1/16W
R517	1-216-841-11	METAL CHIP	47K	5%	1/16W
R518	1-216-841-11	METAL CHIP	47K	5%	1/16W
R519	1-216-841-11	METAL CHIP	47K	5%	1/16W
R520	1-216-864-11	METAL CHIP	0	5%	1/16W
R521	1-216-821-11	METAL CHIP	1K	5%	1/16W

Ref. No.	Part No.	Description			Remark
R522	1-216-864-11	METAL CHIP	0	5%	1/16W
R523	1-216-833-11	METAL CHIP	10K	5%	1/16W
R524	1-216-821-11	METAL CHIP	1K	5%	1/16W
R525	1-216-809-11	METAL CHIP	100	5%	1/16W
R526	1-216-829-11	METAL CHIP	4.7K	5%	1/16W
R528	1-216-829-11	METAL CHIP	4.7K	5%	1/16W
R529	1-216-864-11	METAL CHIP	0	5%	1/16W
R530	1-216-829-11	METAL CHIP	4.7K	5%	1/16W
R531	1-216-829-11	METAL CHIP	4.7K	5%	1/16W
R532	1-216-829-11	METAL CHIP	4.7K	5%	1/16W
R533	1-216-829-11	METAL CHIP	4.7K	5%	1/16W
R534	1-216-829-11	METAL CHIP	4.7K	5%	1/16W
R535	1-216-829-11	METAL CHIP	4.7K	5%	1/16W
R536	1-216-821-11	METAL CHIP	1K	5%	1/16W
R537	1-216-821-11	METAL CHIP	1K	5%	1/16W
R538	1-216-821-11	METAL CHIP	1K	5%	1/16W
R539	1-216-817-11	METAL CHIP	470	5%	1/16W
R540	1-216-821-11	METAL CHIP	1K	5%	1/16W
R541	1-216-817-11	METAL CHIP	470	5%	1/16W
R542	1-216-841-11	METAL CHIP	47K	5%	1/16W
R546	1-216-817-11	METAL CHIP	470	5%	1/16W
R547	1-216-845-11	METAL CHIP	100K	5%	1/16W
R548	1-216-827-11	METAL CHIP	3.3K	5%	1/16W
R552	1-216-833-11	METAL CHIP	10K	5%	1/16W
R553	1-216-845-11	METAL CHIP	100K	5%	1/16W
R554	1-216-857-11	METAL CHIP	1M	5%	1/16W
R555	1-216-852-11	METAL CHIP	390K	5%	1/16W
R556	1-216-019-00	METAL CHIP	56	5%	1/10W
R557	1-216-817-11	METAL CHIP	470	5%	1/16W
R558	1-216-826-11	METAL CHIP	2.7K	5%	1/16W
R559	1-216-833-11	METAL CHIP	10K	5%	1/16W
R560	1-216-829-11	METAL CHIP	4.7K	5%	1/16W
R561	1-216-850-11	METAL CHIP	270K	5%	1/16W
R562	1-216-831-11	METAL CHIP	6.8K	5%	1/16W
R563	1-216-835-11	METAL CHIP	15K	5%	1/16W
R564	1-216-809-11	METAL CHIP	100	5%	1/16W
R566	1-217-671-11	METAL CHIP	1	5%	1/10W
R567	1-217-671-11	METAL CHIP	1	5%	1/10W
R568	1-217-671-11	METAL CHIP	1	5%	1/10W
R569	1-217-671-11	METAL CHIP	1	5%	1/10W
R570	1-216-833-11	METAL CHIP	10K	5%	1/16W
R571	1-216-821-11	METAL CHIP	1K	5%	1/16W
R573	1-216-845-11	METAL CHIP	100K	5%	1/16W
R574	1-216-845-11	METAL CHIP	100K	5%	1/16W
R577	1-216-817-11	METAL CHIP	470	5%	1/16W
R578	1-216-837-11	METAL CHIP	22K	5%	1/16W
R580	1-216-821-11	METAL CHIP	1K	5%	1/16W
R581	1-216-821-11	METAL CHIP	1K	5%	1/16W
R583	1-216-837-11	METAL CHIP	22K	5%	1/16W

Ref. No.	Part No.	Description				Remark
R585	1-216-851-11	METAL CHIP	330K	5%	1/16W	
R586	1-216-833-11	METAL CHIP	10K	5%	1/16W	
R587	1-216-837-11	METAL CHIP	22K	5%	1/16W	
R589	1-216-827-11	METAL CHIP	3.3K	5%	1/16W	
R590	1-216-841-11	METAL CHIP	47K	5%	1/16W	
R595	1-216-845-11	METAL CHIP	100K	5%	1/16W	
R596	1-216-845-11	METAL CHIP	100K	5%	1/16W	
R598	1-216-845-11	METAL CHIP	100K	5%	1/16W	
R599	1-216-831-11	METAL CHIP	6.8K	5%	1/16W	
R796	1-216-833-11	METAL CHIP	10K	5%	1/16W	
R797	1-216-837-11	METAL CHIP	22K	5%	1/16W	
R799	1-216-833-11	METAL CHIP	10K	5%	1/16W	
R971	1-216-821-11	METAL CHIP	1K	5%	1/16W	
R973	1-216-817-11	METAL CHIP	470	5%	1/16W	
R974	1-216-817-11	METAL CHIP	470	5%	1/16W	
R975	1-216-849-11	METAL CHIP	220K	5%	1/16W	
R976	1-216-845-11	METAL CHIP	100K	5%	1/16W	
R977	1-216-849-11	METAL CHIP	220K	5%	1/16W	
R978	1-216-864-11	METAL CHIP	0	5%	1/16W	
R979	1-216-833-11	METAL CHIP	10K	5%	1/16W	
R980	1-216-821-11	METAL CHIP	1K	5%	1/16W	
R981	1-216-809-11	METAL CHIP	100	5%	1/16W	
R982	1-216-841-11	METAL CHIP	47K	5%	1/16W	
R983	1-216-833-11	METAL CHIP	10K	5%	1/16W	
R984	1-216-833-11	METAL CHIP	10K	5%	1/16W	
R989	1-216-809-11	METAL CHIP	100	5%	1/16W	
R991	1-216-295-00	METAL CHIP	0	5%	1/10W	
R994	1-216-836-11	METAL CHIP	18K	5%	1/16W	
R995	1-216-840-11	METAL CHIP	39K	5%	1/16W	
R996	1-216-835-11	METAL CHIP	15K	5%	1/16W	
		< NETWORK RESISTOR >				
RB501	1-236-412-11	NETWORK, RES 1.0KX2				
RB502	1-236-412-11	NETWORK, RES 1.0KX2				
RB503	1-236-412-11	NETWORK, RES 1.0KX2				
RB504	1-236-400-11	NETWORK, RES 100X2				
RB507	1-236-400-11	NETWORK, RES 100X2				
RB508	1-236-412-11	NETWORK, RES 1.0KX2				
RB509	1-236-412-11	NETWORK, RES 1.0KX2				
RB510	1-236-412-11	NETWORK, RES 1.0KX2				
RB511	1-236-412-11	NETWORK, RES 1.0KX2				
RB512	1-236-424-11	NETWORK, RES 10KX2				
RB513	1-236-424-11	NETWORK, RES 10KX2				
RB514	1-236-424-11	NETWORK, RES 10KX2				
RB517	1-236-400-11	NETWORK, RES 100X2				
		< VARIABLE RESISTOR >				
RV161	1-238-852-11	RES, ADJ, CERMET 470 (Y/C SEP.)				

Ref. No.	Part No.	Description				Remark
		< THERMISTOR >				
TH121	1-809-358-11	THERMISTOR, NTC (2125) 15K				
TH202	1-809-354-11	THERMISTOR, NTC (2125) 3.3K				
		< FLAT CABLE >				
W001	1-537-592-11	FP-12 FLEXIBLE BOARD				
W503	1-537-591-11	FP-11 FLEXIBLE BOARD				
		< VIBRATOR >				
X301	1-577-117-21	OSCILLATOR, CRYSTAL (4.433619MHz)				
X501	1-579-368-31	VIBRATOR, CRYSTAL (11.7MHz)				
		**********				
	A-7063-691-A	YP-12 BOARD, COMPLETE				
		**********				
		(Ref. No. 2,000 Series)				
		< CAPACITOR >				
C201	1-135-259-11	TANTAL. CHIP	10uF	20%	6.3V	
C202	1-164-360-11	CERAMIC CHIP	0.1uF		16V	
C203	1-135-161-21	TANTALUM CHIP	22uF	10%	10V	
C204	1-164-633-11	CERAMIC CHIP	0.1uF	10%	25V	
C205	1-164-299-11	CERAMIC CHIP	0.22uF	10%	25V	
C206	1-164-245-11	CERAMIC CHIP	0.015uF	10%	25V	
C207	1-128-257-21	ELECT CHIP	33uF	20%	10V	
C208	1-162-953-11	CERAMIC CHIP	100PF	5%	50V	
C209	1-164-336-11	CERAMIC CHIP	0.33uF		25V	
C210	1-128-257-21	ELECT CHIP	33uF	20%	10V	
C211	1-162-953-11	CERAMIC CHIP	100PF	5%	50V	
C212	1-164-336-11	CERAMIC CHIP	0.33uF		25V	
C213	1-164-360-11	CERAMIC CHIP	0.1uF		16V	
C216	1-135-163-21	TANTAL. CHIP	47uF	20%	4V	
C217	1-164-360-11	CERAMIC CHIP	0.1uF		16V	
C220	1-164-633-11	CERAMIC CHIP	0.1uF	10%	25V	
C221	1-164-245-11	CERAMIC CHIP	0.015uF	10%	25V	
C222	1-164-299-11	CERAMIC CHIP	0.22uF	10%	25V	
C251	1-135-161-21	TANTALUM CHIP	22uF	10%	10V	
C255	1-135-163-21	TANTAL. CHIP	47uF	20%	4V	
C256	1-164-360-11	CERAMIC CHIP	0.1uF		16V	
		< IC >				
IC201	8-759-080-34	IC TA75W01FU				
IC202	8-759-234-77	IC TC4S66F				
IC203	8-759-058-45	IC NJM3403AV				
IC204	8-759-234-77	IC TC4S66F				
		< RESISTOR >				
R201	1-216-803-11	METAL CHIP	33	5%	1/16W	
R202	1-216-837-11	METAL CHIP	22K	5%	1/16W	

Ref. No.	Part No.	Description				Remark
R203	1-216-837-11	METAL CHIP	22K	5%	1/16W	
R204	1-216-837-11	METAL CHIP	22K	5%	1/16W	
R205	1-216-833-11	METAL CHIP	10K	5%	1/16W	
R206	1-218-768-11	METAL CHIP	470K	0.50%	1/10W	
R207	1-218-768-11	METAL CHIP	470K	0.50%	1/10W	
R208	1-216-833-11	METAL CHIP	10K	5%	1/16W	
R209	1-216-835-11	METAL CHIP	15K	5%	1/16W	
R210	1-216-850-11	METAL CHIP	270K	5%	1/16W	
R211	1-216-833-11	METAL CHIP	10K	5%	1/16W	
R212	1-218-768-11	METAL CHIP	470K	0.50%	1/10W	
R213	1-218-768-11	METAL CHIP	470K	0.50%	1/10W	
R214	1-216-833-11	METAL CHIP	10K	5%	1/16W	
R215	1-216-835-11	METAL CHIP	15K	5%	1/16W	
R216	1-216-850-11	METAL CHIP	270K	5%	1/16W	
R220	1-216-837-11	METAL CHIP	22K	5%	1/16W	
R221	1-216-837-11	METAL CHIP	22K	5%	1/16W	
R222	1-216-837-11	METAL CHIP	22K	5%	1/16W	
R251	1-216-803-11	METAL CHIP	33	5%	1/16W	
		< SENSOR >				
SE001	1-810-024-11	SENSOR, ANGULAR VELOCITY (PS SENSOR)				
SE002	1-810-024-21	SENSOR, ANGULAR VELOCITY (YS SENSOR)				
		< FLAT CABLE >				
W212	1-537-588-11	FP-8 FLEXIBLE BOARD				
		**********				
		MISCELLANEOUS				
		**********				
14	1-542-162-11	MICROHONE UNIT				
27	1-692-680-11	SWITCH ASSY, BLOCK				
51	1-467-296-11	SWITCH BLOCK, CONTROL				
67	1-692-257-41	SWITCH, PUSH (ZOOM)				
108	1-691-471-11	CONNECTOR, TRANSLATION 11P				
112	1-751-487-11	CORD, FFC-104 FLEXIBLE FLAT				
115	1-547-635-11	LENS, ZOOM (VCL-6110WF)				
120	1-547-558-21	FILTER BLOCK, OPTICAL				
264	1-568-323-11	CONNECTOR, BOARD TO BOARD 4P				
324	1-691-254-13	CONNECTOR, TRANSLATION 10P				
IC784	A-7030-369-A	CCD BLOCK ASSY (055 SERVICE)				
M901	A-7048-585-A	DRUM ASSY (DGH-90A-R)				
M902	8-835-477-01	MOTOR, DC SCE-0101A (CAPSTAN)				
M903	A-7040-304-A	MOTOR BLOCK ASSY, LM (LOADING)				
M904	3-708-792-01	METER, IG(IRIS)				
M905	3-708-793-01	MOTOR, STEPPING (FOCUS)				
M906	3-708-794-01	MOTOR, PZ (ZOOM)				
S001	1-572-986-11	SWITCH, ROTARY (ENCODER)				
S005	1-570-771-21	SWITCH (C DOWN)				
⚠V901	1-452-565-11	CRT ASSY (M01KKD70WB)				

Ref. No.	Part No.	Description	Remark
		ACCESSORIES & PACKING MATERIALS	
		**********	
	1-467-339-11	REMOTE COMMANDER (RMT-706)	
	1-571-164-11	SWITCH, ANTENNA CHANGE (CABLE) (UK, E)	
	1-573-291-11	CONNECTOR, CONVERSION (AEP)	
	1-575-334-11	CORD, CONNECTION (A/V connecting cable 1.5m)	
	3-712-673-01	SCREWDRIVER (UK, E)	
	3-738-517-01	BELT (S), SHOULDER	
	3-757-360-11	MANUAL, INSTRUCTION (ENGLISH) (AEP, UK)	
	3-757-360-41	MANUAL, INSTRUCTION (FRENCH, DUTCH) (AEP)	
	3-757-360-51	MANUAL, INSTRUCTION (GERMAN, ITALIAN) (AEP)	
	3-757-360-61	MANUAL, INSTRUCTION (SPANISH, SWEDISH) (AEP)	
	3-757-361-11	MANUAL, INSTRUCTION(ENGLISH, SPANISH) (E)	
	3-757-361-41	MANUAL, INSTRUCTION (FRENCH, GERMAN) (E)	
	3-757-361-51	MANUAL, INSTRUCTION (ARABIC) (E)	
	3-757-361-61	MANUAL, INSTRUCTION (CHINESE) (E)	
	3-757-361-71	MANUAL INSTRUCTION(ENGLISH) (Australian)	
*	3-954-313-01	CUSHION, ACC	
*	3-954-314-01	CUSHION (LOWER)	
*	3-954-315-01	INDIVIDUAL CARTON	
	A-6768-254-A	RFU ADAPTOR (RFU-90E) (AEP)	
	A-6767-706-A	RFU ADAPTOR (RFU-89AE) (E)	
	A-6767-707-A	RFU ADAPTOR (RFU-89AE) (UK)	
	A-6768-255-A	RFU ADAPTOR (RFU-90AS) (Australian)	

** AC-V35/V35A AC POWER ADAPTER
*** NP-55H BATTERY PACK

Note.

** MARK PARTS IS AVAILABLE FOR REPAIR SERVICE.
*** MARK PARTS IS AVAILABLE AS AN OPTIONAL ACCESSORY.

****

****
HARDWARE LIST
****

#1 7-627-853-57 PRECISION SCREW +P2X5

****

Be sure to read "Precautions for Replacement of CCD Imager" on page 42 when changing the CCD imager.

The components identified by mark ⚠ or dotted line with mark. ⚠ are critical for safety. Replace only with part number specified.

SECTION 7
CAMERA SECTION ADJUSTMENTS

When performing adjustments, refer to the layout diagrams for adjustment related parts beginning from page 196.

7-1. PREPARATIONS BEFORE ADJUSTMENT (CAMERA SECTION)

7-1-1. List of service tools

- Oscilloscope
- Adjusting driver
- Regulated power supply
- Color monitor
- Vectorscope
- Digital voltmeter

Ref. No.	Name	Parts Code	Usage
J-1	Filter for color temperature correction (C14)	J-6080-058-A	Auto White balance adjustment/check White balance adjustment/check
J-2	ND filter 1.0	J-6080-808-A	White balance check
	ND filter 0.3	J-6080-818-A	White balance check
J-3	Pattern box PTB-450	J-6082-200-A	
J-4	Color chart for pattern box	J-6020-250-A	
J-5	Adjusting remote commander (RM-95-remodeled partly)[Note 1]	J-6082-053-B	
J-6	Siemens star	J-6080-875-A	For checking the flange back
J-7	Extension cable (40P, 0.8 mm)	J-6082-168-A	For extension between the VS-99 board (CN501) and DD-55 board (CN451)
J-8	Extension cable (38P, 0.8 mm)	J-6082-274-A	For extension between the AU-149 board (CN802) and VS-99 board (CN505)
J-9	Extension cable (16P, 0.8 mm)	J-6082-191-A	For extension between the CD-105 board (W784) and VC-132 board (CN601)
J-10	Relay board (21P, 0.5 mm)[Note 2]	J-6082-176-A	For extension between the VC-132 board (CN711) and lens block (FPC) (During the repair of the camera section)
J-11	Extension cable (21P, 0.5 mm)[Note 2]	J-6082-138-A	For extension between the VC-132 board (CN711) and lens block (FPC) (During the repair of the camera section)
J-12	Extension cable (6P, 1.5mm)	J-6082-152-A	For extension between the EVF and VS-99 board (CN903).

Note 1: If the micro processor IC in the adjusting remote commander is not the new micro processor (UPD7503G-C56-12), the pages cannot be switched.
In this case, replace with the new micro processor (8-759-148-35).

Note 2: The extension cable (J-6082-138-A) is also attached with a 21P, 0.5 mm cable. Connect this code to the relay board (J-6082-176-A) for extensions between the lens block (FPC) and VC-132 board (CN711).

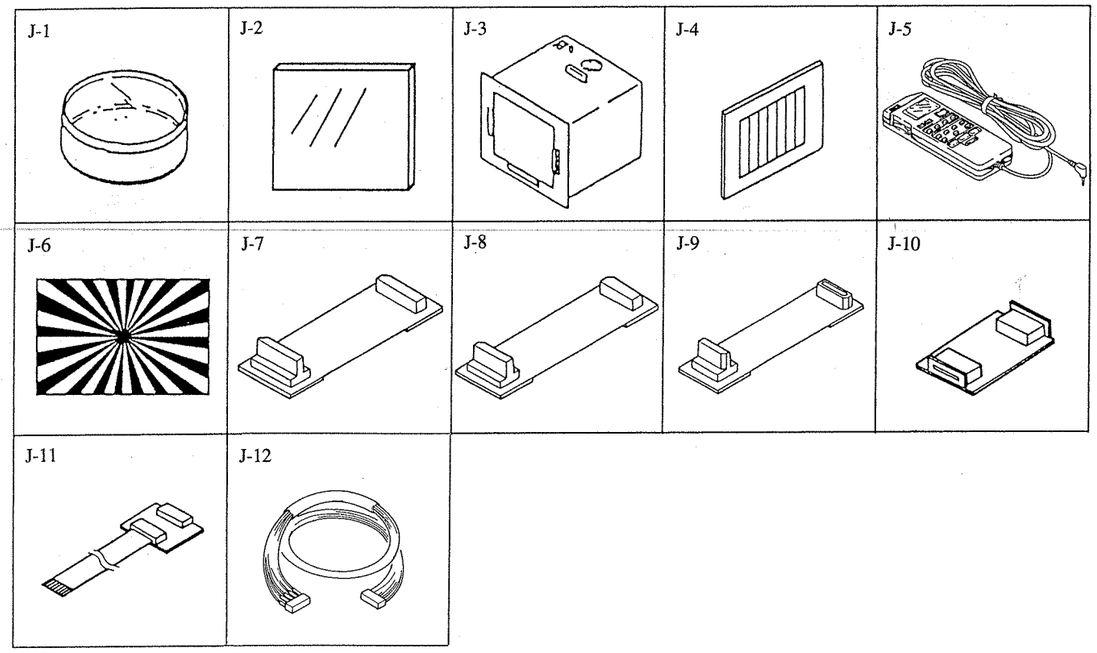

Fig. 7-1.

7-1-2. Preparations

Note 1: For further details of how to remove the cabinet and each board, refer to "2. Disassembly".

Note 2: When adjusting only, the lens block and VC-132 board need not be taken apart.

1) Connect the equipments for adjusting as shown in Fig.7-3
2) The EVF (Electronic viewfinder) is required for checking the PROGRAM AE mode and DDS display. However, by turning on the "data Screen", the same contents can be viewed on the TV monitor. If the EVF is not required, remove CN502 of the VS-99 board.

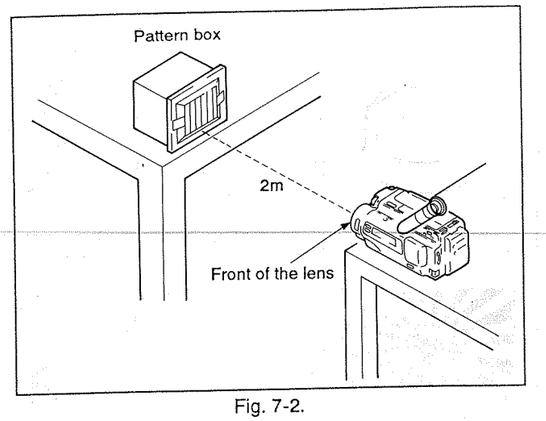

Fig. 7-2.

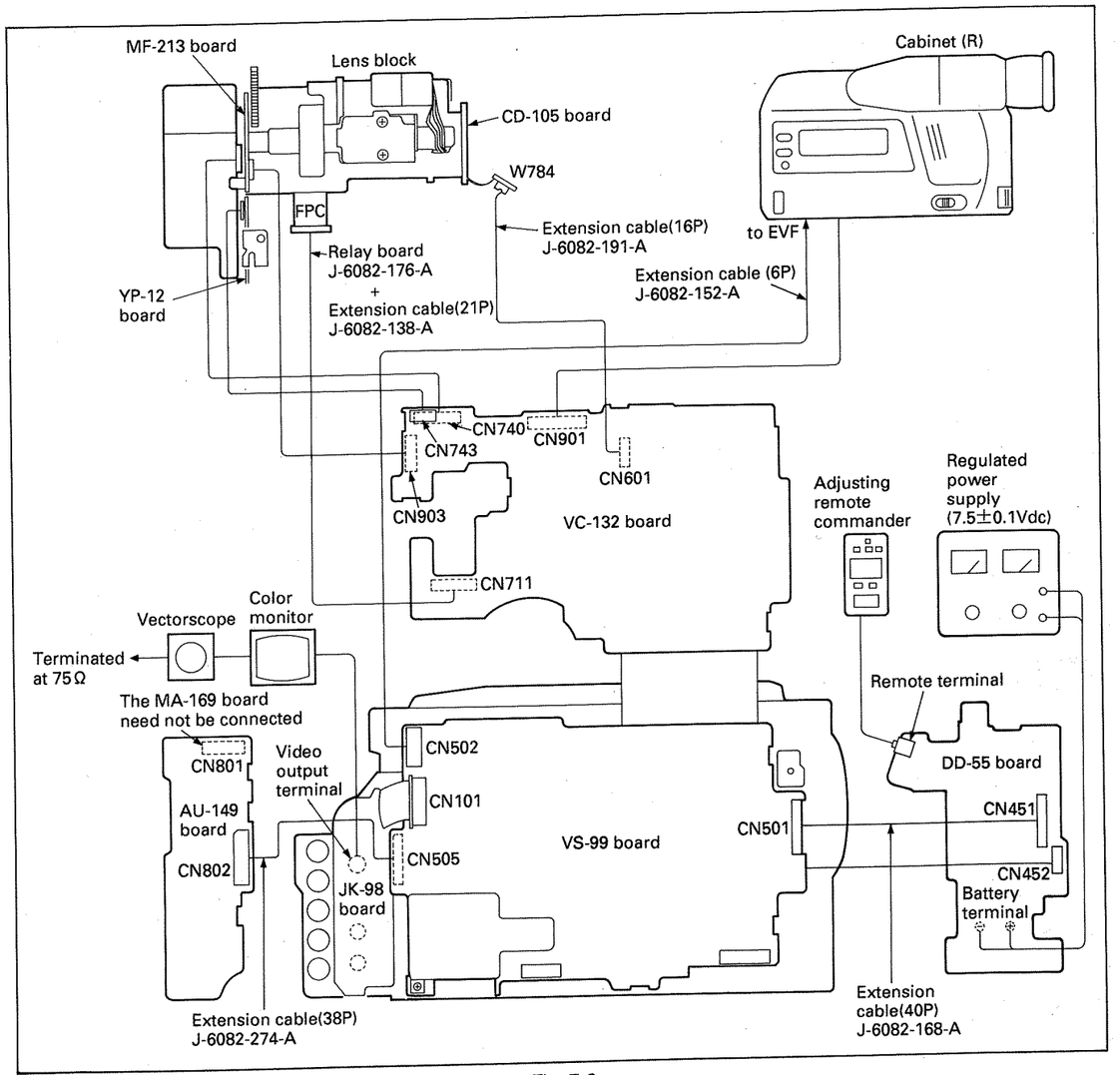

Fig. 7-3.

7-1-3. Precautions

1. Switch settings

Adjust the switches to the following positions, and adjust without loading the cassette tape, unless specified otherwise.

1. Camera/player power switch (Power switch unit S900) ..... Camera
2. Standby switch (SW-222 board S903) ..... Standby
3. Auto lock cover (CF block S927) ..... Open
4. Focus button (CF block S915) ..... Manual
5. Program AE button (CF block S913) ..... Off
6. Steady shot switch (CF block S922) ..... Off

2. Adjusting Procedure

Adjust in the given order.

2. Adjusting Procedure

Adjust in the given order.

3. Subject

1) Color bar chart (Standard picture frame)
   Adjust the picture frame as shown in Fig. 7-4. if adjustments are performed using the color bar chart.
2) White pattern (Standard picture frame)
   Remove the color bar chart from the pattern box, and so that

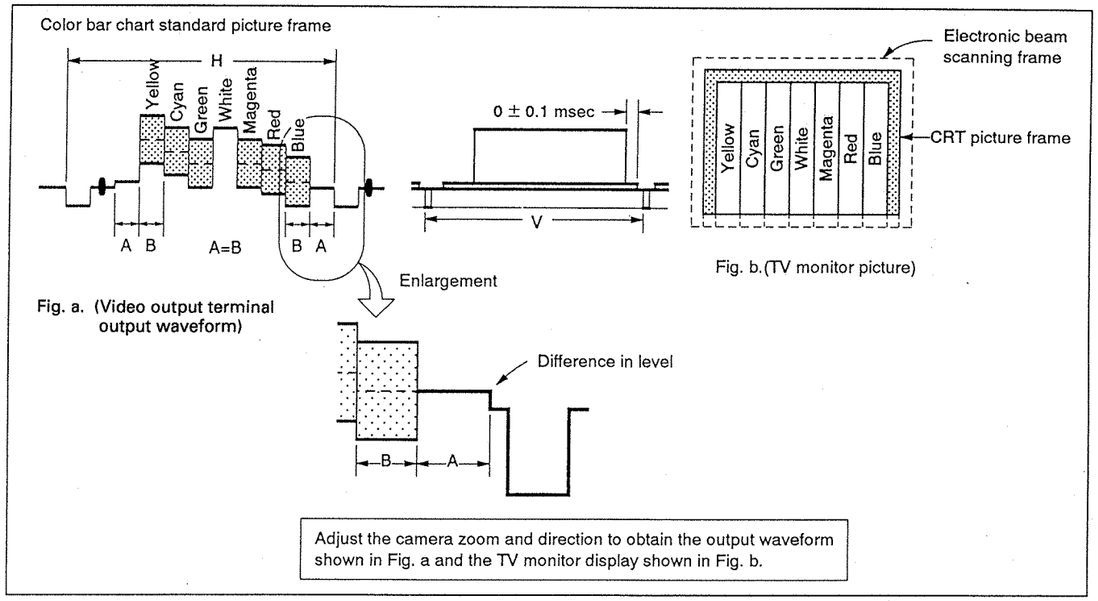

Fig. 7-4.

3) Chart for flange back adjustment
   Combine a white A0 size (1189 mm× 841 mm) paper to a black one, and make the chart shown in Fig. 7-5.

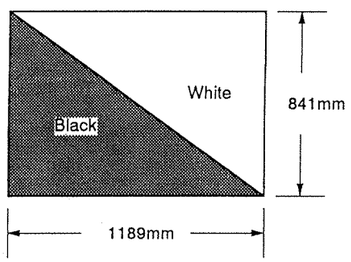

Fig. 7-5.

Note: Use the non-reflecting and non-glazing vellum paper whose size is more than A0, and make the boundary between white and black to be smoothly flat.

7-1-4. Adjusting Remote Commander

The camera section is adjusted by changing the constant or coefficient of the digital signal processing calculation, or modifying the output voltage of the EVR IC (VC-132 board IC654). This is controlled by the camera micro processor (VC-132 board IC653), which reads the data written in the nonvolatile memory (VC-132 board IC641: EEPROM), and transmits it to the digital signal processing circuit and EVR.

To perform adjustments, adjustment data written in the nonvolatile memory must be rewritten, using the adjusting remote commander.

The adjusting remote commander uses the remote commander signal line (LANC) to communicate mutually with the camera microprocessor. The page, address and the up/down commands of the data are transmitted from the adjusting remote commander to the camera micro processor. And, the page, address, and data are transmitted for the vice versa.

1. Using the adjusting remote commander

1) Connect the adjusting remote commander to the remote control terminal (DD-55 board J452).
2) Adjust the HOLD switch of the adjusting remote commander to "HOLD" (SERVICE position).

If it has been properly connected, the LCD on the adjusting remote commander will display as shown in Fig. 7-6.

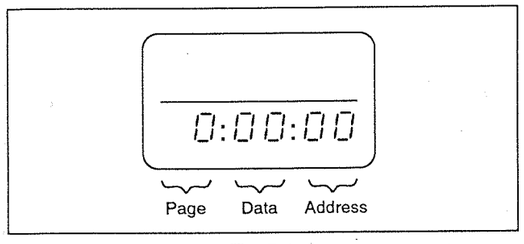

Fig. 7-6.

3) Operate the adjusting remote commander as follows.
   - Changing the page
     The page increases when the EDIT SEARCH+ button is pressed, and decreases when the EDIT SEARCH– button is pressed. There are altogether 16 pages, from 0 to F.

Hexadecimal notation	0	1	2	3	4	5	6	7	8	9	A	B	C	D	E	F
LCD Display	0	1	2	3	4	5	6	7	8	9	A	b	c	d	E	F
Decimal notation conversion value	0	1	2	3	4	5	6	7	8	9	10	11	12	13	14	15

Table 7-1.

   - Changing the address
     The address increases when the FF (▶▶) button is pressed, and decreases when the REW (◀◀) button is pressed. There are altogether 256 addresses, from 00 to FF.
   - Changing the data (Data setting)
     The data increases when the PLAY (▶) button is pressed, and decreases when the STOP (■) button is pressed.
     There are altogether 256 data, from 00 to FF.
   - Writing the adjustment data
     The PAUSE button must be pressed to write the adjustment data (F page) in the nonvolatile memory.
     (The new adjustment data will not be recorded in the nonvolatile memory if this step is not performed.)
4) Select page: 6, address: 00, and adjust the data to 01. This releases the write protect of page F, and enables the camera section (Addresses 01 to DF of page F) to be adjusted.
5) After completing all adjustments, turn off the main power supply (7.5V) once. This release the adjustment mode (other than page F).

2. Precautions upon using the adjusting remote commander

Mishandling of the adjusting remote commander may erase the correct adjustment data at times. To prevent this, it is recommended that all adjustment data be noted down before beginning adjustments and new adjustment data after each adjustment.

7-1-5. Page F Address List

Note 1: The data already listed in the adjustment data memo column are fixed values.

Note 2: The adjustment data initial values are values just after executing "Page F Data Initialization" and "Page F Data Modification". They are different from the values after executing all adjustments.

Address	Name	Function [ ] contains the adjustment voltage output terminal	Adjustment data Initial value	Adjustment data Memo column
00	SET ID	Set ID	50	50
01	NT PAL	Micro processor mode setting	51	51
02	FT SW	DDS display mode switching Data / Mode 00 / Normal B8 / Focus position adjustment	00	00
03	FADER LEVEL	AE REF level change in fader	E0	E0
04	FADER ENDTIME	AE REF modulation time setting in fader	10	10
05	CORE Y GAIN	Camera core Y gain	3F	3F
06	VSUB	CCD imager V SUB voltage adjustment [IC654 ③]	80	
07	VPGH	CCD imager V RG voltage adjustment [IC654 ④]	80	
08	VREF Y	Camera core Y D/A reference voltage, SYNC level adjustment [IC654 ⑤]	6A	6A
09	VREF C	Camera core camera D/A reference voltage, burst level adjustment [IC654 ⑥]	58	58
0A	HALL GAIN	Hall amplifier gain adjustment [IC654 ⑦] } HALL adjustment	80	
0B	HALL OFFSET	Hall amplifier off set adjustment [IC654 ⑧] } HALL adjustment	80	
0C	LOWLIGHT START	Low illuminance level modulation start setting	6A	6A
0D	REF 2V	2V reference voltage for hall element [IC654 ⑫]	68	68
0E	AD REF	Black level during A/D conversion [IC654 ⑬]	A0	A0
0F	CORE DEFTH	CCD correction horizontal correlated control	04	04
10	CORE OTHER	Various camera core mode settings	52	52
11	CORE APCNH	Horizontal aperture setting	A5	A5
12	CORE APCNV	Vertical aperture setting	3F	3F
13	CORE EFFECT	Camera core special effects control	A0	A0
14	CORE MAT R	RED matrix constant } Colr reproductivity adjustment	6D	
15	CORE MAT B	BLUE matrix constant } Colr reproductivity adjustment	26	
16	CORE BURST LEVEL	Burst level setting, color modulation ON/OFF Data / Mode 38 / Normal 2E / Color modulation stopped	38	38
17	CORE CHROMA DLY	Y/C delay adjustment	27	27
18	CORE Y SETUP	Set up level setting	01	01
19	CORE APCN	Aperture setting	17	17

Table 7-2 (1).

Address	Name	Function [ ] contains the adjustment voltage output terminal		Adjustment data Initial value	Adjustment data Memo column
1A	CORE B Y3200 HUE	B–Y HUE	Color reproductivity adjustment	F8	
1B	CORE R Y3200 HUE	R–Y HUE		F0	
1C	CORE R Y3200 GAIN	R–Y GAIN		5A	5A
1D	CORE B Y3200 GAIN	B–Y GAIN		31	31
1E	CS/APCN CUT	Low illuminance aperture and chroma suppress level		23	23
1F	NEXT DEF BIT	CCD imager correction pattern	CCD imager correction data writing	00	
20	CCD DEFECT0	CCD imager correction data		00	
21	CCD DEFECT1	CCD imager correction data		00	
22	CCD DEFECT2	CCD imager correction data		00	
23	CCD DEFECT3	CCD imager correction data		00	
24	CCD DEFECT4	CCD imager correction data		00	
25	CCD DEFECT5	CCD imager correction data		00	
26	CCD DEFECT6	CCD imager correction data		00	
27	CCD DEFECT7	CCD imager correction data		00	
28	CCD DEFECT8	CCD imager correction data		00	
29	CCD DEFECT9	CCD imager correction data		00	
2A	CCD DEFECT10	CCD imager correction data		00	
2B	CCD DEFECT11	CCD imager correction data		00	
2C	CCD DEFECT12	CCD imager correction data		00	
2D	CCD DEFECT13	CCD imager correction data		00	
2E	CCD DEFECT14	CCD imager correction data		00	
2F	CLPFLG	Digital clamp mode setting		03	03
30	ADMIN	Offset minimum value setting		50	50
31	C SHIFT	C shift amount setting		02	02
32	Y SHIFT	Y shift amount setting		02	02
33	LOWLIGHT START2	Low illuminance REF level modulation start setting 2		44	44
34	LOWLIGHT CS	Low illuminance color erasure setting		00	00
35	LOWLIGHT LEVEL	Low illuminance S/N correction point setting		61	61
36	DEFECT DELAY	CCD imager correction pulse delay setting		00	00
37	APCN E ZOOM	Not used		00	00
38	RG3200H	3200k Red/Green reference data H	Auto white balance reference data input	30	
39	RG3200L	3200k Red/Green reference data L		00	
3A	BG3200H	3200k Blue/Green reference data H		58	
3B	BG3200L	3200k Blue/Green reference data L		00	
3C	SPEED S	Indoor/Outdoor determination (short)		20	20
3D	SPEED L	Indoor/Outdoor determination (long)		20	20
3E	3200 OFFSET	Pre white offset		12	12
3F	TRAN SPEED	Speed of pursur high speed for changing a source of light		02	02
40	NORM R	R regular correction coefficient, reference 80h	Auto white balance adjustment	88	
41	NORM B	B regular correction coefficient, reference 80h		60	
42	INDOOR S	Indoor determination shutter data		00	00
43	OUTDOOR S	Outdoor determination shutter data		00	00
44	IRIS IN	Indoor determination hall data	IRIS IN/OUT adjustment	36	
45	IRIS OUT	Outdoor determination hall data		3C	

Table 7-2 (2).

Address	Name	Function [ ] contains the adjustment voltage output terminal	Adjustment data Initial value	Adjustment data Memo column
46	G LEVEL	High luminance Green integral level	02	02
47	G WIDTH	High luminance Green integral level range	03	03
48	MAT HUE	Variable linear matrix HUE coefficient	00	00
49	MAT GAIN	Variable linear matrix GAIN coefficient	00	00
4A	ADJ RCONT	Direct output value (RED)	35	35
4B	B DIFFERENCE	Reference difference from outdoor fixed value	0A	0A
4C	BOTTOM SLP R	Slant R coefficient of drawing frame bottom	48	48
4D	BOTTOM SLP B	Slant B coefficient of drawing frame bottom	78	78
4E	MIDDLE SLP R	Slant R coefficient of drawing frame middle	60	60
4F	MIDDLE SLP B	Slant B coefficient of drawing frame middle	40	40
50	TOP SLP R	Slant R coefficient of drawing frame top	66	66
51	TOP SLP B	Slant B coefficient of drawing frame top	18	18
52	KEIKO R	Slant R coefficient of drawing frame fluorescent lamp	66	66
53	KEIKO B	Slant B coefficient of drawing frame fluorescent lamp	18	18
54	BOTTOM UP	Upper value of drawing frame bottom	C2	C2
55	BOTTOM DWN	Lower value of drawing frame bottom	8C	8C
56	MIDDLE UP	Upper value of drawing frame middle	AD	AD
57	MIDDLE DWN	Lower value of drawing frame middle	96	96
58	TOP UP	Upper value of drawing frame top	78	78
59	TOP DWN	Lower value of drawing frame top	60	60
5A	KEIKO	Lower value of output frame fluorescent lamp output	66	66
5B	KEIKO DWN	Lower value of drawing frame fluorescent lamp	59	59
5C	R TOP LMT	Upper value of drawing frame R	6E	6E
5D	R DWN LMT	Lower value of drawing frame R	20	20
5E	B TOP LMT	Upper value of drawing frame B	83	83
5F	B IN TOP	Upper value of INDOOR drawing frame B	67	67
60	B IN MAX	Upper value of INDOOR output frame B	5C	5C
61	B OUT MIN	Lower value of OUTDOOR output frame B	5C	5C
62	B OUT DWN	Lower value of OUTDOOR drawing frame B	4A	4A
63	B DWN LMT	Lower value of drawing frame B	1B	1B
64	ADJ BCONT	Direct output value (BLUE)	50	50
65	T M DIVID	Border between top and middle of drawing frame	5E	5E
66	B M DIVID	Border between middle and bottom of drawing frame	39	39
67	DELAY TIME	Auto white balance tracking speed Data: 0A — Mode: Normal Data: 01 — Mode: High speed tracking	0A	0A
68	B IN MIN	INDOOR output frame B bottom	33	33
69	OUT HYS OFF	OUTDOOR hysteresis off difference	0C	0C
6A	OUT B HYS	OUTDOOR hysteresis amount	06	06
6B	AWB MODE	Auto white balance adjustment mode Data: 00 — Mode: Normal Data: D0 — Mode: AWB adjustment Data: F1 — Mode: AWB all tracking	00	00

Table 7-2 (3).

Address	Name	Function [ ] contains the adjustment voltage output terminal	Adjustment data	
			Initial value	Memo column
6C	IN B HYS	Indoor hysteresis amount (Blue)	04	04
6D	IN R HYS	Indoor hysteresis amount (Red)	02	02
6E	KAKE NORM R	ADD : 40 NORM R × 1000H	20	20
6F	KAKE NORM B	ADD : 41 NORM B × 1000H	40	40
70	AE FUNCTION 1	Switch for turning each AE function ON and OFF (1)	02	02
71	AE FUNCTION 2	Switch for turning each AE function ON and OFF (2)	10	10
72	AE REF H	Reference value for AE (Upper)	1B	1B
73	HIGHLIT LEVEL	High luminance modulation level setting	50	50
74	AE MIN L	MAX GAIN adjustment	2F	
75	AGC MIN	AGC MIN value (AGC reference value)	D4	D4
76	IRIS MIN H	Iris limit value (Upper)	40	40
77	AE MAX	AE level max limiter	A0	A0
78	YAKEI LEVEL	YAKEI mode AGC max limiter	40	40
79	JITEISU DOWN	Constant during loop response DOWN side	28	28
7A	JITEISU UP	Constant during loop response UP side	0D	0D
7B	ORETEN SET	Variable point due to time constant error amount	13	13
7C	OMOMIWAKU 0	Weighting by changing to three frames (Upper frame)	40	40
7D	OMOMIWAKU 1	Weighting by changing to three frames (Surrounding frame)	FF	FF
7E	AFC WIDE	Coefficient required for the ANF integral loop	03	03
7F	AFC GAIN	Loop gain of the flicker less loop	01	01
80	AFC LIMIL	Limiter corresponding to the error rate (Lower)	60	60
81	DELTA GAIN	Gain smoothing value	08	08
82	ZOOM DROP 1	F-No. dropping (1) by Zoom lens	AE	AE
83	ZOOM DROP 2	F-No. dropping (2) by Zoom lens	41	41
84	HIST P KEISU	Histocomp level setting P for counter light determination	40	40
85	HIST H KEISU	Histocomp level setting H for counter light determination	E0	E0
86	HIST L KEISU	Histocomp level setting L for counter light determination	90	90
87	FUZZY JITEISU	Constant during auto back light response	08	08
88	BAIRITSU P	Magnification setting of required for HIST P	80	80
89	FUZZY DATA 1	Exposure correction data 1	90	90
8A	FUZZY DATA 2	Exposure correction data 2	C0	C0
8B	FUZZY DATA 3	Exposure correction data 3	B0	B0
8C	FUZZY DATA 4	Exposure correction data 4	A0	A0
8D	FUZZY DATA 5	Exposure correction data 5	80	80
8E	FUZZY DATA 6	Exposure correction data 6	A0	A0
8F	FUZZY DATA 7	Exposure correction data 7	98	98
90	FUZZY DATA 8	Exposure correction data 8	90	90
91	FUZZY DATA 9	Exposure correction data 9	60	60
92	FUZZY DATA 10	Exposure correction data 10	40	40
93	HIGHLIT START	Setting of high luminance modulation start	58	58
94	HIGHLIT END	Setting of high luminance modulation stop	88	88
95	IRIS OFFSET	Iris ROM table open side offset	28	28
96	IRIS PWM BIAS	Adjusting for IRIS PWM BIAS	F8	F8
97	AGC AMP BIAS	Adjusting for AGC AMP BIAS	FE	FE

Table 7-2 (4).

Address	Name	Function [ ] contains the adjustment voltage output terminal	Adjustment data	
			Initial value	Memo column
98	WIDE H	Zoom wide end upper (Flange back adjustment)	03	
99	WIDE L	Zoom wide end lower (Flange back adjustment)	26	
9A	TELE H	Zoom tele end upper (Flange back adjustment)	1C	
9B	TELE L	Zoom tele end lower (Flange back adjustment)	B5	
9C	FOCUS H	Focus offset upper (Flange back adjustment)	11	
9D	FOCUS L	Focus offset lower (Flange back adjustment)	03	
9E	ZM HYS	Zoom speed hysteresis	00	00
9F	ADJ LENZ		00	00
A0	REST WIDE	Zoom limiter WIDE side	20	20
A1	REST TELE	Zoom limiter TELE side	10	10
A2	NEAR LIM	Focus near limit	80	80
A3	LANC ZM SPD	Lanc zoom speed	F0	F0
A4	VAR ZM SPD H	Variable zoom speed	EA	EA
A5	VAR ZM SPD L	Variable zoom speed	A8	A8
A6	STOP DEAD ZONE	Dead zone amount for the absolute value control	04	04
A7	ZM SPD LMT	Zoom speed (Limit)	0B	0B
A8	ZM SPD MAX	Zoom speed (Maximum)	38	38
A9	ZM MOTOR STOP	Zoom motor stop	15	15
AA	PULSE SPD MAX	Maximum zoom pulse value	09	09
AB	ADJ0	For adjusting (ZOOM OFF MODE) Data: FB — Mode: Normal Data: 01 — Mode: Zoom position fixed	FB	FB
AC	ADJ1	For adjusting (WND A)	1E	1E
AD	ADJ2	For adjusting (WND B)	5A	5A
AE	ADJ3	For adjusting	00	00
AF	AF0	Noise threshold	55	55
B0	AF ID	AF ID for testing	00	00
B1	AF WIND	AF frame for testing	00	00
B2	HBG REF	High luminance gate level	FA	FA
B3	AGC REF 1	AGC gain 1	04	04
B4	AGC REF 2	AGC gain 2	05	05
B5	AGC REF 3	AGC gain 3	12	12
B6	HOLE REF 1	Hole data close	A5	A5
B7	HOLE REF 2	Hole data middle	96	96
B8	HOLE REF 3	Hole data open	76	76
B9	IIR K	IIR filter coefficient	03	03
BA	B NOISE	Base noise level	30	30
BB	GATE THR	Noise threshold	55	55
BC	HB THR	High luminance threshold (HB)	80	80
BD	HBFH THR	High luminance threshold (fh)	40	40
BE	TEST WOB	Wobbling amplitude for testing	FF	FF
BF	WOB LIMIT	Wobbling amplitude limit	06	06

Table 7-2 (5).

Address	Name	Function [ ] contains the adjustment voltage output terminal	Adjustment data Initial value	Memo column
C0	SHIND THR	Depth of focus THR	0C	0C
C1	SPD UP 0	Speed up value (No. -1)	01	01
C2	SPD UP 1	Speed up value (No. -2)	01	01
C3	WOB DET SW	Wobbling detect filter switch	00	00
C4	STEP LIM	Speed limit value	0A	0A
C5	YAMA SW	Climbing switch	00	00
C6	SPD THR	Speed THR	06	06
C7	YAMA THR	Climbing THR	50	50
C8	AF SPD	Speed offset	01	01
C9	TEST SPD	Speed for testing	FF	FF
CA	WOB AMP	Wobbling amplitude offset	02	02
CB	MODE SW	Test mode switching	FF	FF
CC	SPD OFFSET 1	Speed offset up value 1	01	01
CD	SPD OFFSET 2	Speed offset up value 2	01	01
CE	AF FADE SW	Fader AF mode	01	01
CF	IRIS THR		00	00
D0	V SENSOR GAIN	PITCH adjustment gain	88	88
D1	H SENSOR GAIN	YAW adjustment gain	64	64
D2		Not used	00	00
D3	V LIMIT 1	PITCH initial limiter	FF	FF
D4	V LIMIT 2	Loop limiter in PITCH integral	7F	7F
D5	V CORE VALUE	PITCH core ring	10	10
D6	VK HPF	PITCH HPF feedback coefficient	FF	FF
D7	H LIMIT 1	YAW initial limiter	FF	FF
D8	H LIMIT 2	Loop limiter in YAW integral	7F	7F
D9	H CORE VALUE	YAW core ring	10	10
DA	H K HPF	YAW HPF feedback coefficient	FF	FF
DB	K TABLE	PITCH and YAW integral feedback coefficient table	04	04
DC	V REF CENTER L	PITCH PWM center value (lower 8 bit)	00	00
DD	V REF CENTER H	PITCH PWM center value (upper 8 bit)	08	08
DE	H REF CENTER L	YAW PWM center value (lower 8 bit)	00	00
DF	H REF CENTER H	YAW PWM center value (upper 8 bit)	08	08
E0	STILL THR	Discrimination poin due to still and deflation	80	80
E1	V CORE STILL	Still core ring value (Vertical)	40	40
E2	H CORE STILL	Still core ring balue (Horizontal)	40	40
E3		Not used	00	00
E4			00	00
E5			00	00
E6			00	00
E7			00	00
E8	PRE YL R-Y DATA	Hue a difference data of yellow (Red-Yellow)	00	
E9	PRE YL B-Y DATA	Hue a difference data of yellow (Blue-Yellow)	00	
EA	PRE R R-Y DATA	Hue a difference data of Red (Red-Yellow)	00	
EB	PRE R B-Y DATA	Hue a difference data of Red (Blue-Yellow)	00	
EC	BL R-Y DATA	Hue a difference data of Blue (Red-Yellow)	00	

Table 7-2 (6).

Address	Name	Function [ ] contains the adjustment voltage output terminal	Adjustment data Initial value	Memo column
ED	BL B-Y DATA	Hue a difference data of Blue (Blue-Yellow)	00	
EE	CY R-Y DATA	Hue a difference data of Cyan (Red-Yellow)	00	
EF	CY B-Y DATA	Hue a difference data of Cyan (Blue-Yellow)	00	
F0		Column for inputting unit's ID No, etc. Not related to unit's operations.	FF	
F1			FF	
F2			FF	
F3			FF	
F4			FF	
F5			FF	
F6			FF	
F7			FF	
F8			FF	
F9			FF	
FA			FF	
FB			FF	
FC			FF	
FD			FF	
FE			FF	
FF			FF	

Table 7-2 (7).

7-1-6. Page 6, Page 2 Address List

The camera adjustment mode can be set by setting the data in the following table to page 6 or 2. (The data of these pages can be set temporarily. When the main power supply (7.5V) is turned off, the original values (normal value) are returned. Therefore, these adjustment modes can be released easily by turning off the main power supply.)

(Example) By setting data: 01 to page:6, address: 00, the write protect of page F, addresses 01 to EF can be released.

1. Page 6

Address	Adjustment Mode	Data	Function
00	Page F protect	00	Normal (Protect released)
		01	Protect release of address 01 to EF of Page F
01	Camera adjustment switch **Note:** To execute this address adjustment mode, it is necessary to press the PAUSE button of the adjusting remote commander after setting the data.	00	Normal
		01	IRIS OPEN, AGC HOLD
		03	IRIS CLOSE1, AGC HOLD
		09	ND0.5 SHUTTER (PAL=1/160, NTSC=1/190)
		0B	ND0.8 SHUTTER (PAL=1/320, NTSC=1/380)
		0D	AWB PRESET1: 3200K PRESET DATA input
		0F	WB 3200K PRESET: Indoor white balance mode
		11	AWB PRESET2: 3200K PRESET DATA input preparations
		13	Flange back adjustment preparations
		15	Flange back adjustment execution
		17	1/2000 shutter mode
		19	MAX GAIN adjustment mode
		2D	EEPROM PRE WRITE: Page F, page E initial data writing
02	DDS display switching	00	Normal
		02	Color difference data display
		03	HALL DATA display
		04	R ratio display
		05	B ratio display
		0C	Auto focusing display (01: Focusing, 00: Not focusing)
		0E	Light level display
03	Weighting on/off	00	Weighting off
		10	Normal (Weighting on)
10	Camera control microprocessor version	10	Version 1 (SC424602FU : VC-132 board IC653)
		20	Version 2 (SC424605FU5)
11	Page F data initialization completed display	00	Normal (Data can be initialized)
		01	Data initialized
12	Shutter mode	00	Normal
		19	1/4000 shutter mode
21	Flange back adjustment completed display	00	Normal (Flange back adjustable)
		01	Flange back adjusted
30	VAP control microprocessor version	10	Version 1 (CXP80620A-020R : VC-132 board IC745)

Table 7-3.

2. Page 2

Category	Address	Adjustment Mode	Data	Function
01	37	VH address L		Title horizontal/vertical position (L)
01	38	VH address H		Title horizontal/vertical position (H)
01	39	Data transmission to SG	00	Normal
			01	Data transmission to SG begins
01	3D	Character generator oscillation mode	01	Continuous oscillation mode
			others	Normal
FF	E3	Mode control microprocessor version	01	Version 1 (MB89092PFV-G-128: VC-132 board IC902)

Note: The category is specified by the data of page 2, address 00.
(Example) To specify category 01, adjust to 01 the data of page 2, address 00.

Table 7-4.

7-1-7. Data Processing

For some adjustments, the DDS display and the display data of the adjusting remote commander (hexadecimal numeral) must be calculated in order to obtain the adjustment data. In this case, after converting the hexadecimal numeral to a decimals numeral once, calculate and convert the result to a hexadecimal numeral, and use it as the adjustment data. Table 7-5 is the hexadecimal-decimal calculation table.

Hexadecimal-Decimal Conversion Table

②

The lower digits of the hexadecimal / The upper digits of the hexadecimal	0	1	2	3	4	5	6	7	8	9	A (A)	B (b)	C (c)	D (d)	E (E)	F (F)
0	0	1	2	3	4	5	6	7	8	9	10	11	12	13	14	15
1	16	17	18	19	20	21	22	23	24	25	26	27	28	29	30	31
2	32	33	34	35	36	37	38	39	40	41	42	43	44	45	46	47
3	48	49	50	51	52	53	54	55	56	57	58	59	60	61	62	63
4	64	65	66	67	68	69	70	71	72	73	74	75	76	77	78	79
5	80	81	82	83	84	85	86	87	88	89	90	91	92	93	94	95
6	96	97	98	99	100	101	102	103	104	105	106	107	108	109	110	111
7	112	113	114	115	116	117	118	119	120	121	122	123	124	125	126	127
8	128	129	130	131	132	133	134	135	136	137	138	139	140	141	142	143
9	144	145	146	147	148	149	150	151	152	153	154	155	156	157	158	159
A(A)	160	161	162	163	164	165	166	167	168	169	170	171	172	173	174	175
①→ B(b)	176	177	178	179	180	181	182	183	184	185	186	187	188	189	190	191
C(c)	192	193	194	195	196	197	198	199	200	201	202	203	204	205	206	207
D(d)	208	209	210	211	212	213	214	215	216	217	218	219	220	221	222	223
E(E)	224	225	226	227	228	229	230	231	232	233	234	235	236	237	238	239
F(F)	240	241	242	243	244	245	246	247	248	249	250	251	252	253	254	255

Note: ( ) contains the display of the adjusting remote commander.

(Example) When the DDS display or the display of adjusting remote commander is BD (b d).
As the upper digit of the hexadecimal numeral is B(b), and the lower digit is D (d), the meeting point "189" of ① and ② in the above table is the decimal numeral to be calculated.

Table 7-5.

7-2. CAMERA SYSTEM ADJUSTMENTS

1. Adjusting points when replacing main parts

When replacing the CCD imager or lens block, adjust the items indicated by ○ in the following table.

	When CCD imager is replaced	When lens block is replaced
V SUB adjustment	○	
V RG adjustment	○	
HALL adjustment		○
CCD imager correction data writing	○	
Flange back adjustment	○	○
IRIS IN/OUT adjustment	○	○
MAX GAIN adjustment	○	
Auto white balance balance reference data input	○	
Auto white balance adjustment	○	
Color reproductivity adjustment	○	
Linear matrix adjustment	○	

2. Power supply voltage check (DD-55 board)

Subject	Arbitrary
Measuring instrument	Digital voltmeter
D5V check	
Measurement point	Pins ⑤ and ⑥ of CN451
Specified value	4.89 ± 0.15 Vdc
D4V check	
Measurement point	Pin ③ of CN451
Specified value	3.80 ± 0.15 Vdc
CAM 5V check	
Measurement point	Pin ① of CN451
Specified value	4.90 ± 0.15 Vdc
15V check	
Measurement point	Pin ④ of CN451
Specified value	15.0 ± 0.4 Vdc
–8.5V check	
Measurement point	Pin ② of CN451
Specified value	–8.5 ± 0.5 Vdc

Checking Method:

1) Check that each power supply voltage satisfies the specified value.
   If not, refer to "Video circuit, Power supply block adjustment".

3. Page F data initialization

Note: If the page F data has been initialized, all adjustments of the camera section must be carried out again.

Initializing method:

Order	Page	Address	Data	Procedure	Conditions
1				Turn off/on the main power supply (7.5V)	
2	**6**	**00**	**01**	**Releasing of protect.**	
3	6	01	2D	Press the PAUSE button. (Initializing the page F data. The data of addresses 01 to EF of page F will be initalized.)	
4	6	11		Check that the data is 01. (Display of data initialized.)	

Note: Initialize page F only when the nonvolatile memory (VC-132 board IC641 EEPROM) has been replaced.

Processing after initializing

Order	Page	Address	Data	Procedure	Conditions
1	6	01	00	Press the PAUSE button. (Releasing of initialization mode)	
2				After " Page F Data Modifications ", carry out all adjustments of the camera section.	

Related Adjustments:

All camera adjustments of the camera section excluding " 28 MHz origin oscillation adjustment ".

4. Page F data modification

Some parts of the data (initial data) automatically written on page F by the initialization of the page F data will difer according to the version of the camera micro processor. Change the data manually, and arrange it.

Modification method:

Order	Page	Address	Data	Procedure	Conditions
1	**6**	**00**	**01**	**Releasing of page F protect.**	
2	F	00 (SET ID)	50	Set each data to each address, and press the PAUSE button.	
		08 (V REF Y)	6A		
		09 (V REF C)	58		
		18 (CORE Y SETUP)	01		
		1C (CORE R Y3200 GAIN)	5A		
		1D (CORE B Y3200 GAIN)	31		
		1E (CS/APCN CUT)	23		
		33 (LOWLIGHT START 2)	44		
		34 (LOW LIGHT CS)	00		
		35 (LOW LIGHT LEVEL)	61		
		C0 (SHIND THR)	60		
		C1 (SPD UP0)	01		
		C7 (YAMA THR)	50		
		CC (SPD OFF SET 1)	01		
		CD (SPD OFF SET 2)	01		

Remarks: The versions of the camera micro processor (VC-132 board IC653) and the VAP micro processor (VC-132 board IC745) can be distinguished using the following table.

• Camera control microprocessor

Page	Address	Data	
6	10	10	Version 1
		20	Version 2

• VAP control microprocessor

Page	Address	Data	
6	30	10	Version 1

5. 28 MHz origin oscillation adjustment (VC-132 board)

Subject	Not required
Measurement Point	Pin ㊼ of IC602 (CL)
Measuring Instrument	Frequency counter
Adjusting Element	CT601
Specified Value	14187500 ± 71 Hz

Adjusting method:

Order	Adjusting element	Procedure	Conditions
1	CT601	Adjust the oscillation frequency to the specified value.	

6. V SUB adjustment (VC-132 board)

Subject	Not required
Adjustment Page	F
Adjustment Address	06 (V SUB)

Adjusting method:

Order	Page	Address	Data	Procedure	Conditions
1	**6**	**00**	**01**	**Releasing of protect.**	
2	F	06		Reading a voltage code of V SUB indicated by CCD imager then input data of a table (Fig. 7-7.).	
3	F	06		Press the PAUSE button.	

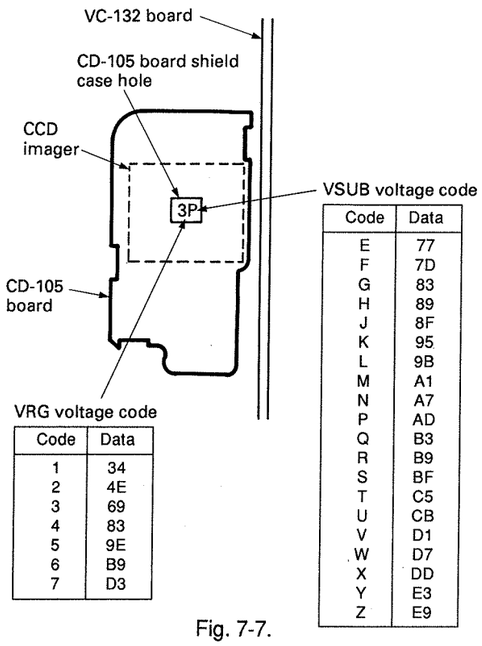

Code	Data
1	34
2	4E
3	69
4	83
5	9E
6	B9
7	D3

Code	Data
E	77
F	7D
G	83
H	89
J	8F
K	95
L	9B
M	A1
N	A7
P	AD
Q	B3
R	B9
S	BF
T	C5
U	CB
V	D1
W	D7
X	DD
Y	E3
Z	E9

Fig. 7-7.

Related Adjustments:
"MAX gain adjustment", "Auto white balance reference data input", "Auto white balance adjustment", "Color reproductivity adjustment".

7. VRG adjustment (VC-132 board)

Subject	Not required
Adjustment Page	F
Adjustment Address	07 (V PGH)

Adjusting method:

Order	Page	Address	Data	Procedure	Conditions
1	**6**	**00**	**01**	**Releasing of protect.**	
2	F	07		Reading a voltage code of VRG indicated by CCD imager then input data of a table (Fig. 7-7.).	
3	F	07		Press the PAUSE button.	

8. CCD Imager correction data writing

Subject	Not required
Adjustment Page	F
Adjustment Address	1F to 2E (CCD-DEFECT)

Write the CCD imager correction data in the following cases.

1. When the CCD imager has been replaced
2. When the camera EEPROM (VC-132 board IC641) has been replaced
3. When the page F data has been initialized

In the case of 1, as the CCD imager for repair does not require the correction data, adjust the data of addresses 1D to 2C of page F and those of addresses E0 to EF of page D to "00".

Writing method:

Order	Page	Address	Data	Procedure	Conditions
1	**6**	**00**	**01**	**Releasing of page F protect.**	
2	F	1F~2E		Set data 00 to each address, and press the PAUSE button.	
3	**1**	**00**	**01**	Releasing of page D protect.	
4	D	E0~EF		Set data 00 to each address, and press the PAUSE button. (Writing the backup data)	

In the case of 2 and 3, read the CCD imager correction data written on addresses E0 to EF in page D and write them in addresses 1F to 2E.

Writing method:

Order	Page	Address	Data	Procedure	Conditions
1	**6**	**00**	**01**	**Releasing of page F protect.**	
2	D	E0~EF		Read the CCD imager correction data.	
3	F	1F		Set the data of address E0 of page D, and press the PAUSE button.	
		20		Set the data of address E1 of page D, and press the PAUSE button.	
		21		Set the data of address E2 of page D, and press the PAUSE button.	
		⋮		⋮	
		2E		Set the data of address EF of page D, and press the PAUSE button.	

9. HALL adjustment

Subject	Not required
Measurement Point	DDS display of EVF or TV monitor
Measuring Instrument	
Adjustment Page	F
Adjustment Address	0A (HALL GAIN) 0B (HALL OFFSET)
Specified Value	33 to 37 during IRIS OPEN **B7 to BB during IRIS CLOSE**

Adjusting method:

Order	Page	Address	Data	Procedure	Conditions
1	**6**	**00**	**01**	**Releasing of protect.**	
2	6	02	03	Set the HALL DATA display mode.	
3	6	01	03	Press the PAUSE button. (Setting the IRIS CLOSE mode)	
4	F	0B	80	Press the PAUSE button. (HALL OFFSET data initial setting)	
5	F	0A	40	Read the DDS display data (Note 1) and take it as W2.	IRIS CLOSE mode
6	F	0A	30	Read the DDS display data and take it as W1.	IRIS CLOSE mode
7	6	01	01	Press the PAUSE button. (Setting the IRIS OPEN mode)	
8	F	0A	30	Read the DDS display data and take it as K1.	IRIS OPEN mode
9	F	0A	40	Read the DDS display data and take it as K2.	IRIS OPEN mode
10				Convert W1, W2, K1, K2 to decimal numerals, and obtain W1′, W2′, K1′, K2′. **(Refer to Table 7-5. "Hexadecimal-Decimal Conversion Table")**	
11				Calculate X1′ using the following equations (Decimal calculation). A′=W2′+K1′−W1′−K2′ ····· Equation 1 B′=W1′−K1′ ····· Equation 2 $X1' = \frac{2128+(48\times A')-(16\times B')}{A'}$ ····· Equation 3	
12				Convert X1′ to a hexadecimal numeral, and obtain X1. (Round off to a whole number)	
13	F	0A		Set the data to X1 (obtained at step 12).	
14	F	0A		Press the PAUSE button.	
15	F	0B		Change the data with the PLAY and STOP buttons, and adjust the DDS display data to 35.	IRIS OPEN mode
16	F	0B		Press the PAUSE button.	
17	6	01	03	Press the PAUSE button. (Setting the IRIS CLOSE mode)	
18				**If the DDS display data is B7 to BB, it indicates the end of adjustments. Perform "Processing after Adjustments". If not, carry out step 19 onwards with the DDS display data as W0.**	IRIS CLOSE mode

Note 1: Lower 2 digits of the data displayed at the bottom right of the EVF or TV monitor.

Order	Page	Address	Data	Procedure	Conditions
19				Convert W0 to a decimal numeral, and obtain W0′.	
20				Calculate X2′ using the following equations (decimal numeral calculation). C′=W0′−B′−53 ····· Equation 4 $X2' = \frac{(133-B')\times(X1'-48)+48\times C'}{C'}$ ···· Equation 5 (X1′ and B′ are values obtained from equations 2 and 3 at step 11)	
21				Convert X2′ to a hexadecimal numeral, and obtain X2. (Round off to a whole number)	
22	F	0A		Set the data to X2 (obtained at step 21).	
23	F	0A		Press the PAUSE button.	
24	F	0B		Change the data with the PLAY and STOP buttons, and adjust the DDS display data to BA.	IRIS CLOSE mode
25	F	0B		Press the PAUSE button.	
26	6	01	01	Press the PAUSE button. (Setting the IRIS OPEN mode)	
27				Check that the DDS display data is 33 to 37.	IRIS OPEN mode

Processing after Adjustments:

Order	Page	Address	Data	Procedure	Conditions
1	6	02	00	Releasing of HALL DATA display mode.	
2	6	01	00	Press the PAUSE button. (Releasing the IRIS CLOSE/OPEN mode)	

Related Adjustments:
"IRIS IN/OUT adjustment".

10. Flange back adjustment

Subject	Chart for flange back adjustment Placed 2000 ± 5 mm in front of the lens Illuminance: 300 ± 50 lux)
Measurement Point	Check the operations on the TV monitor
Measuring Instrument	
Adjustment Page	F
Adjustment Address	98 (WIDE H), 99 (WIDE L), 9A (TELE H), 9B (TELE L), 9C (FOCUS H), 9D (FOCUS L)

Adjusting method:

Order	Page	Address	Data	Procedure	Conditions
1	**6**	**00**	**01**	**Releasing of protect.**	
2	F	98	03	Set the initial data, and press the PAUSE button.	
		99	26		
		9A	1C		
		9B	B5		
		9C	11		
		9D	03		
3				Check that the center of the flange back adjustment chart coincides with that of the exposure display at both the zoom lens TELE end and the WIDE end.	
4	6	21		Check that the data is 00. (Flange back adjustable display)	
5	6	01	13	Press the PAUSE button.	
6	6	01	15	Press the PAUSE button. (This enables adjustments to be carried out automatically. Adjustments are performed at the zoom lens TELE end first, and then at the WIDE end. The adjustment data is automatically input to page: F, addresses: 98 to 9D.)	
7	6	21		Check that the data is 01. (Display indicating that flange back adjustment has completed.)	

Processing after Adjustments:

Order	Procedure
1	Turn on the main power supply (7.5V) (Out of focus if this is not carried out.)

11. Flange back check

Subject	Siemens star (Placed 2m in front of the lens)
Measurement Point	DDS display of the EVF or TV monitor
Measuring Instrument	
Specified Value	$D_2=D_1 \pm 3$

Checking method:

Order	Page	Address	Data	Procedure	Conditions
1				Place the Siemens star 2m in front of the lens.	
2				To open the IRIS, decrease the luminous intensity to the siemens star up to a point before noise appears on the image displayed on the monitor TV screen.	
3				Expose the Siemens star at the TELE end.	
4				Press the "Focus" button, and turn on the auto focus.	
5	6	02	0C	Check that the DDS display is 00 0001. (Focusing check)	Auto focus on
6				Press the "Focus" button and turn off the auto focus.	
7				Expose the simens star at the WIDE end.	
8	**6**	**00**	**01**	**Releasing of protect.**	
9	6	02	00		
10	F	02	B8	Press the PAUSE button. (Setting the focus position display mode)	
11				Read the DDS display data (4 digits) and take it as D_1.	Zoom WIDE end Auto focus off
12				Press the "Focus" button, and turn on the auto focus.	
13	6	02	0C	Check that the DDS display is 00 0001. (Focusing check)	Auto focus on
14	6	02	00	Read the DDS display (focus position display) data and take it as D_2.	Zoom WIDE end Auto focus on Focusing condition
15				Check that $D_2=D_1 \pm 3$.	

Checking method:

Order	Page	Address	Data	Procedure
1	F	02	00	Press the PAUSE button. (Releasing the focus position display mode)

12. SYNC level check (VC-132 board)

Subject	Not required
Measurement Point	Pin ⑧ of CN641 (Y OUT)
Measuring Instrument	Oscilloscope
Specified Value	A=150 ± 10 mV

Checking method:

Order	Page	Address	Data	Procedure	Conditions
1	**6**	**00**	**01**	**Releasing of protect.**	
2	6	01	03	Press the PAUSE button. (Setting the IRIS CLOSE mode)	
3				Check that the SYNC level to the specified value.	IRIS CLOSE mode

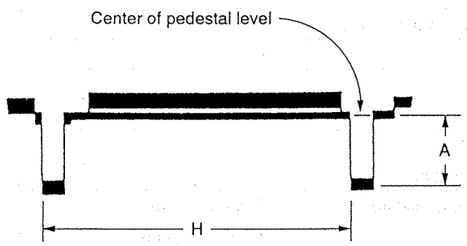

Fig. 7-8.

Processing after Adjustments:

Order	Page	Address	Data	Procedure	Conditions
1	6	01	00	Press the PAUSE button. (Releasing the IRIS CLOSE mode)	

13. Burst level check (VC-132 board)

Subject	Not required
Measurement Point	Pin ⑥ of CN641 (C OUT)
Measuring Instrument	Oscilloscope
Specified Value	A=150 ± 15 mVp-p

Checking method:

Order	Page	Address	Data	Procedure	Conditions
1	**6**	**00**	**01**	**Releasing of protect.**	
2	6	01	03	Press the PAUSE button. (Setting the IRIS CLOSE mode)	
3				Check that the SYNC level to the specified value.	IRIS CLOSE mode

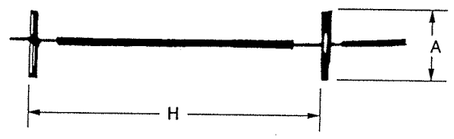

Fig. 7-9.

Processing after Adjustments:

Order	Page	Address	Data	Procedure	Conditions
1	6	01	00	Press the PAUSE button. (Releasing the IRIS CLOSE mode)	

Related Adjustments:
"Color reproductivity adjustment".

14. Picture frame setting

Subject	Color bar chart standard picture frame
Measurement Point	Video output terminal
Measuring Instrument	Oscilloscope and TV monitor.
Specified Value	A=B, C=D, t=0 ± 0.1 msec.

Setting method:

Order	Procedure
1	Turn off the auto focus.
2	Adjust the focus using the focus knob.
3	Adjust the direction of the zoom and camera, and set at the specified position.
4	Mark the position of the picture frame on the monitor display, and adjust it to this position if the "color bar chart standard picture frame" or "white pattern standard picture frame" is used in the following adjustments.

Checking with the oscilloscope

1. H cycle

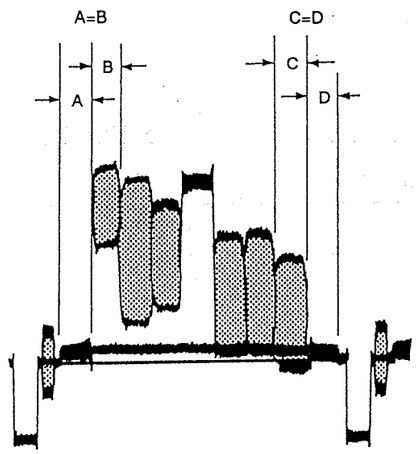

2. V cycle

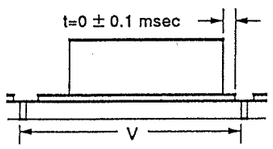

Fig. 7-10.

Checking on the TV monitor (Under scan mode)

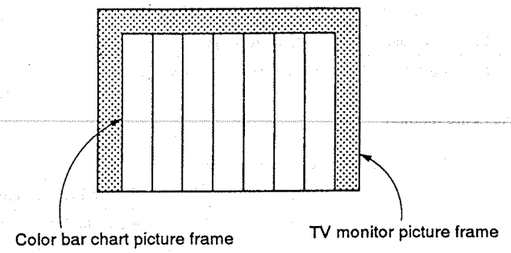

Fig. 7-11.

15. IRIS IN/OUT adjustment

Subject	White pattern standard picture frame
Measurement Point	DDS display fo the EVF or TV
Measuring Instrument	monitor
Adjustment Page	F
Adjustment Address	44 (IRIS IN) 45 (IRIS OUT)

Checking method:

Order	Page	Address	Data	Procedure	Conditions
1	**6**	**00**	**01**	**Releasing of protect.**	
2	6	02	0E	Setting of light level display mode.	
3	6	01	0B	Press the PAUSE button. (Setting the ND 0.8 shutter mode)	
4				Read the data of the DDS display data, and take it as D_1.	ND 0.8 shutter mode
5				Convert D_1 to decimal numerals to obtain D_2'. (Refer to table 7-5 "Hexadecimal-Decimal Conversion Table")	
6				Calculate D_2' from the following equations (Decimal numeral calculation). $D_2'=D_1-5584$	
7				Convert D_2' to hexadecimal numerals to obtain D_2. Read the upper 2 digits of D_2, and take it as D_{44}.	
8	F	44		Adjust the data to D_{44} (obtained at step 7) with the PLAY and STOP buttons.	
9	F	44		Press the PAUSE button.	
10	6	01	09	Press the PAUSE button. (Setting the ND 0.5 shutter mode)	
11				Read the data of the DDS display data, and take it as D_3.	ND 0.5 shutter mode
12				Convert D_3 to decimal numerals to obtain D_3'.	
13				Calculate D_4' from the following equations (Decimal numeral calculation). $D_4'=D_3-3568$	
14				Convert D_4' to hexadecimal numerals to obtain D_4. Read the upper 2 digits of D_4, and take it as D_{45}.	
15	F	45		Adjust the data to D_{45} (obtained at step 14) with the PLAY and STOP buttons.	
16	F	45		Press the PAUSE button.	

Processing after Adjustments:

Order	Page	Address	Data	Procedure	Conditions
1	6	02	00	Releasing of light level display mode.	
2	6	01	00	Press the PAUSE button. (Releasing the ND 0.5 shutter mode.	

16. Max gain adjustment (VC-132 board)

Subject	White pattern standard picture frame
Measurement Point	Pin ⑧ of CN641 (Y OUT)
Measuring Instrument	Oscilloscope
Adjustment Page	F
Adjustment Address	74 (AE MIN L)
Specified Value	A=270 ± 10 mV

Adjusting method:

Order	Page	Address	Data	Procedure	Conditions
1	**6**	**00**	**01**	**Releasing of protect.**	
2	6	01	19	Press the PAUSE button. (Max gain adjustment mode)	
3	F	74		Change the data with the PLAY and STOP buttons, and adjust the CAM Y signal level (A) to the specified value.	MAX GAIN adjustment mode
4	F	74		Press the PAUSE button.	

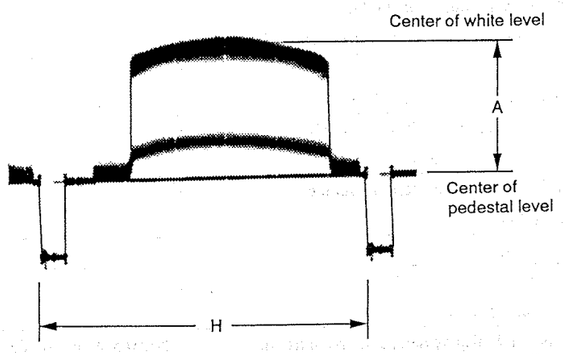

Fig. 7-12.

Processing after Adjustments:

Order	Page	Address	Data	Procedure	Conditions
1	6	01	00	Press the PAUSE button. (Releasing the max gain adjustment mode)	

17. Auto white balance reference data input

Subject	White pattern standard picture frame
Adjustment Page	F
Adjustment Address	38 (RG3200H), 39 (RG3200L), 3A (BG3200H), 3B (BG3200L)

Adjusting method:

Order	Page	Address	Data	Procedure	Conditions
1				Turn off/on the main power supply (7.5V).	
2	**6**	**00**	**01**	**Releasing of protect.**	
3	6	11		Check that the data is 00. (Display indicating that auto white balance reference data can be input)	
4	6	01	11	Press the PAUSE button. (Auto white balance reference data input preparation mode)	
5	6	01	0D	Press the PAUSE button. (The auto white balance reference data input will be executed and the data input automatically to addresses 38 to 3B of page F.)	
6	6	11		Check that the data is 01. (Display indicating that the auto white balance reference data input completed)	

Processing after Adjustments:

Order	Page	Address	Data	Procedure	Conditions
1	6	01	00	Press the PAUSE button. (Releasing the auto white balance reference data input mode)	
2				Perform "Auto White Balance Adjustment".	

Related Adjustments:
"Auto White Balance Adjustment".

18. Auto white balance adjustment

Subject	White pattern standard picture frame
Filter	Filter C14 for color temperature correction
Measurement Point	Check with the DDS display on the EVF or TV monitor
Measuring Instrument	
Adjustment Page	F
Adjustment Address	40 (NORM R), 41 (NORM B)
Specified Value	R ratio 2A80 ± 40 B ratio 5E80 ± 40

Note: Perform this adjustment after "Auto White Balance Reference Data Input".

Adjusting method:

Order	Page	Address	Data	Procedure	Conditions
1	**6**	**00**	**01**	**Releasing of protect.**	
2	F	6B	D0	Press the PAUSE button. (Setting the auto white balance adjustment mode)	
3	6	02	04	Setting of R ratio display mode.	
4	F	40		Change the data with the PLAY and STOP buttons, and adjust the R ratio data of the DDS display to the specified value.	R ratio display mode
5	6	02	05	Setting of B ratio display mode.	
6	F	41		Change the data with the PLAY and STOP buttons, and adjust the B ratio data of the DDS display to the specified value.	B ratio display mode
7	F	41		Press the PAUSE button.	

Processing after Adjustments:

Order	Page	Address	Data	Procedure	Conditions
1	F	6B	00	Press the PAUSE button. (Releasing the auto white balance adjustment mode)	
2	6	02	00	Releasing of B ratio display mode.	

19. White balance check

Subject	White pattern standard picture frame
Filter	Filter C14 for color temperature correction ND filters 1.0 and 0.3
Measurement Point	Video output terminal
Measuring Instrument	Vectorscope
Specified Value	Fig. 7-13 A to C

Checking method:

Order	Page	Address	Data	Procedure	Conditions
1				Check that the lens is not covered with either filter.	
2	**6**	**00**	**01**	**Releasing of protect.**	
3	6	01	0F	Press the PAUSE button. (Setting the WB 3200K preset mode)	
4				Check that the white luminance point is within the circle shown in **Fig. 7-13. A.** (Setting the indoor white balance mode)	WB 3200K preset mode, no filter
5	6	01	00	Press the PAUSE button. (Releasing WB 3200K preset mode)	
6	F	67	01	Press the PAUSE button. (Setting the auto white balance high speed tracking mode)	
7				Check that the white luminance point is within the circle shown in **Fig. 7-13. A.**	Auto white balance high speed tracking mode, no filter
8				Place the C14 filter on the lens.	
9				Check that the white luminance point is within the circle shown in **Fig. 7-13. B.** (Checking the auto white balance outdoor mode)	Auto white balance high speed tracking mode, C14 filter
10				Remove the C14 filter, and place the ND filter 1.3 (1.0+0.3) over the lens.	
11				Check that the white luminance point is within the circle shown in **Fig. 7-13. C.** (Checking the auto white balance outdoor mode)	Auto white balance high speed tracking mode, ND filter 1.3

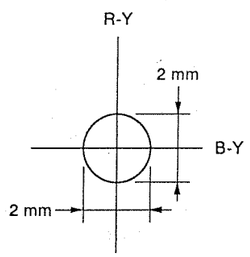

Fig. 7-13. A

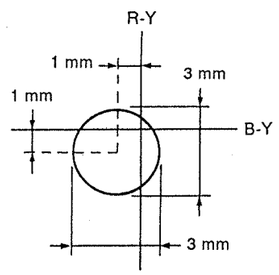

Fig. 7-13. B

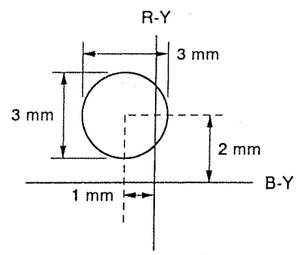

Fig. 7-13. C

Processing after Adjustments:

Order	Page	Address	Data	Procedure	Conditions
1	F	67	0A	Press the PAUSE button. (Releasing the auto white balance high speed tracking mode)	

20. Color reproductivity adjustment

Subject	Color bar chart standard picture frame
Measurement Point	Video output terminal
Measuring Instrument	Vectorscope
Adjustment Page	F
Adjustment Address	14 (CORE MAT R) 15 (CORE MAT B) 1A (CORE B-Y HUE) 1B (CORE R-Y)
Specified Value	Each color luminance point should be within each color reproduction frame.

Adjusting method:

Order	Page	Address	Data	Procedure	Conditions
1	**6**	**00**	**01**	**Releasing of protect.**	
2	6	03	00	Setting of weighting off mode.	
3	F	3E	00	Press the PAUSE button. (Setting the WB 3200K preset mode)	
4	F	6B	F1	Press the PAUSE button. (Setting the AWB all tracking mode.)	
5	F	14 15 1A 1B		Change the data, and settle red and yellow color luminance point in each color reproduction adjustment frame. Press the PAUSE button for each address.	

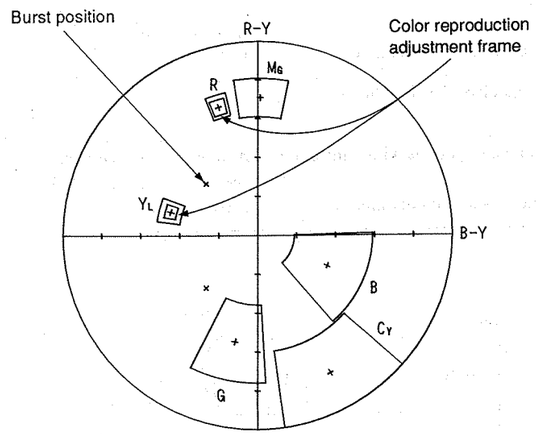

Fig. 7-14.

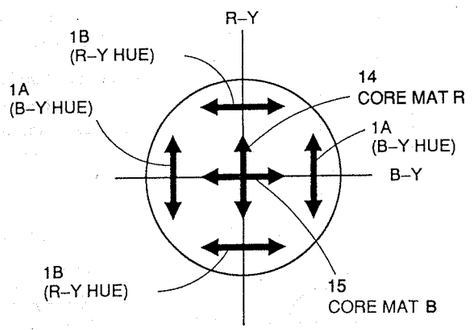

Fig. 7-15. Direction of the Movements of Adjustment Addresses and Luminance Points

Processing after Adjustments:

Order	Page	Address	Data	Procedure	Conditions
1	F	6B	00	Press the PAUSE button. (Releasing the AWB all tracking mode)	
3	F	3E	12	Press the PAUSE button. (Releasing the WB 3200K preset mode)	
2	6	03	10	Set the normal mode (weighting on mode).	

7-3. ELECTRONIC VIEWFINDER SYSTEM ADJUSTMENTS

7-3-1. Horizontal Slant Adjustment

Mode	Playback
Signal	Alignment tape: For checking operations (WR5-5CSP) Monoscope section
Specified Value	± 1.5°

Adjusting method:

Order	Procedure
1	Adjust RV504 (BRIGHT) so that the CRT can be seen easily and clearly.
2	Loosen the DY (deflection yoke) tightening nut.
3	Rotate DY, and adjust the image so that it is horizontal.
4	Tighten the DY tightening nut. (Do not tighten it too tightly.)

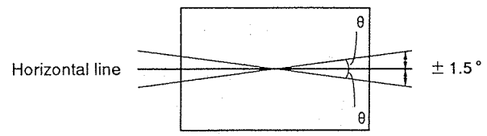

Specified value: The image should be within ± 1.5° of the horizontal line.

Fig. 7-16.

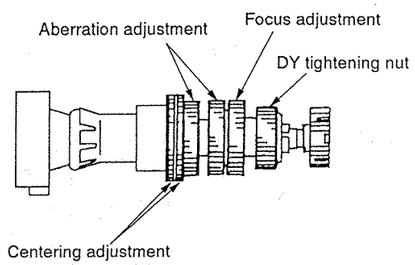

Fig. 7-17.

7-3-2. Centering Adjustment

Mode	Playback
Signal	Alignment tape: For checking operations (WR5-5CSP) Monoscope section
Specified Value	± 4%

Adjusting method:

Order	Procedure
1	Use the centering adjustment ring and adjust so that the left, right, top, and bottom sides of the display are uniform.

Note: As the centering position changes due to earth magnetism, rotate it 360° in the horizontal direction, and adjust with the center section of the modifying position.

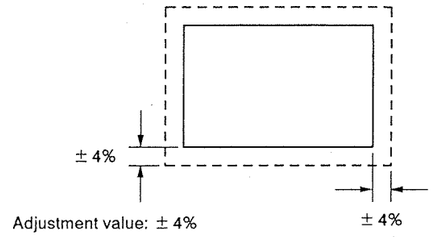

Fig. 7-18.

7-3-3. Focus Adjustment

Mode	Playback
Signal	Alignment tape: For checking operations (WR5-5CSP) Monoscope section

Adjusting method:

Order	Procedure
1	Adjust the focus ring to obtain the optimum focus.

7-3-4. Aberration Adjustment

Mode	E-E
Signal	Dot pattern
Specified Value	T<2•D F<D

Note: Refer to "9-1-3 How to set the REC mode in the model without REC switch" in VIDEO SECTION ADJUSTMENTS.

Adjusting method:

Order	Procedure
1	Adjust the aberration adjustment ring so that the tracing of the dot becomes less than twice the diameter of the dot, or the fan aberration becomes less than the diameter of the dot.
2	If the centering becomes displaced here, perform the centering adjustment from the beginning again.

Fig. 7-19.

7-3-5. Horizontal Oscillation Frequency Adjustment (VF-42 board)

Mode	Playback
Signal	Alignment tape: For checking operations (WR5-5CSP)
Measurement Point	Positive pole terminal of C516
Measuring Instrument	Digital voltmeter or oscilloscope (DC range)
Adjustment Element	RV501
Specified Value	2.30 ± 0.05 Vdc

Adjusting method:

Order	Procedure
1	Adjust to 2.30 ± 0.05 Vdc using RV501.

7-3-6. Horizontal Amplitude Adjustment (VF-42 board)

Mode	Playback
Signal	Alignment tape: For checking operations (WR5-5CSP) Monoscope section
Adjusting Element	C504
Specified Value	6 ± 2%

Adjusting method:

Order	Procedure
1	Rotate RV502 on the VF-42 board, and adjust the top and bottom sides of the monoscope image to the top and bottom edges of the display.
2	Rotate RV504 on the VF-42 board so that the brightness is the normal level.
3	Adjust the pattern (A) of the H size adjustment capacitor (C504) to "short" or "open", so that the horizontal direction over scan becomes 6 ± 2% (Left and right totals).

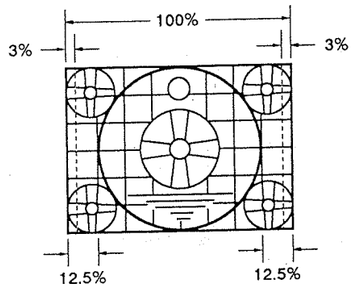

Fig. 7-20.

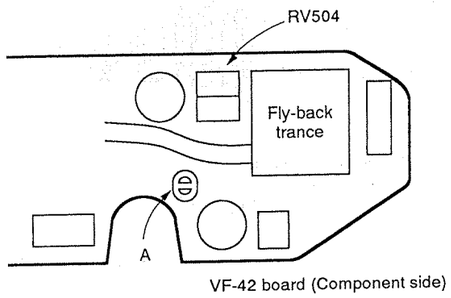

Section A	Size H
Open	Small
Short	Big

Fig. 7-21.

7-3-7. Vertical Amplitude Adjustment (VF-42 board)

Mode	Playback
Signal	Alignment tape: For checking operations (WR5-5CSP) Monoscope section
Adjusting Element	RV502
Specified Value	5 ± 2%

Adjusting method:

Order	Procedure
1	Adjust RV502 so that the vertical direction over scan becomes 5 ± 2% (Top and bottom totals).

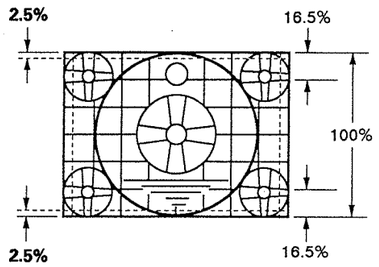

Fig. 7-22.

7-3-8. Brightness, Contrast Adjustments (VF-42 board)

Mode	Playback
Signal	Alignment tape: For checking operations (WR5-5CSP) Monoscope section
Adjusting Element	Brightness: RV504 Contrast: RV503

Adjusting method:

Order	Procedure
1	Rotate RV504 and RV503 alternately, and adjust so that the bright/dark sections of the gray scale are displayed correctly. (The bright section should not be so bright that the cross hatch in the monoscope circle appears vague. The dark section should not be so dark that the darkest section and the second darkest section of the gray scale cannot be differentiated.)

7-3-9. Horizontal Amplitude, Vertical Amplitude, Focus Check

"7-3-6. Horizontal Amplitude Adjustment" and "7-3-7. Vertical Amplitude Adjustment" should both satisfy the specified values. If not, perform the adjustments from the beginning again. In this case, perform "7-3-8. Brightness, Contrast Adjustments" again. Moreover, check the focus, and if it found to be vague, perform "7-3-3. Focus Adjustment" and "7-3-4. Aberration Adjustment".

7-4. ARRANGEMENT DIAGRAM FOR ADJUSTMENT PARTS

l Amplitude,

ınd "7-3-7. Vertical
the specified values.
inning again. In this
.djustments" again.
› be vague, perform
ration Adjustment".

DD-55 BOARD (COMPONENT SIDE)

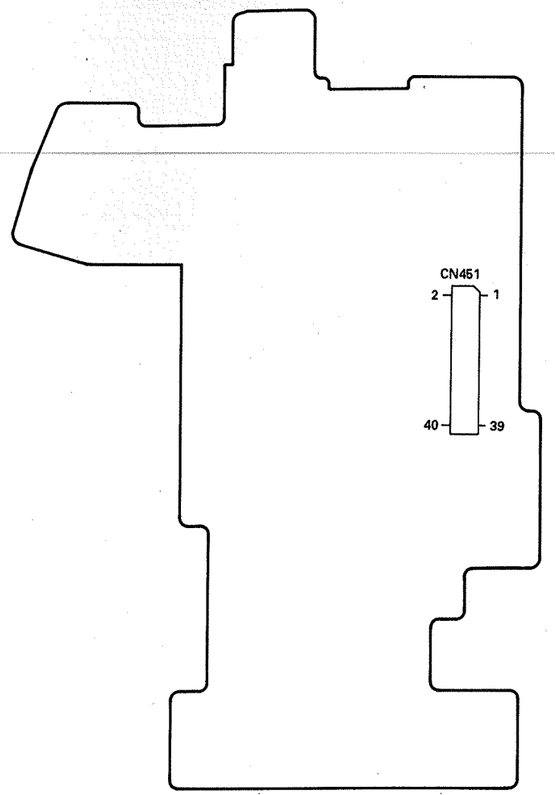

VC-132 BOARD (COMPONENT SIDE)

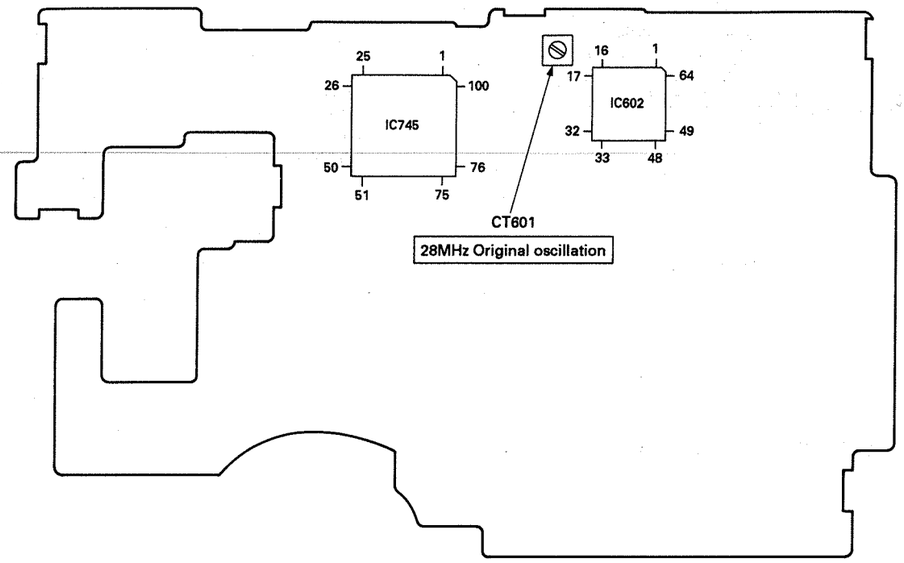

VC-132 BOARD (CONDUCTOR SIDE)

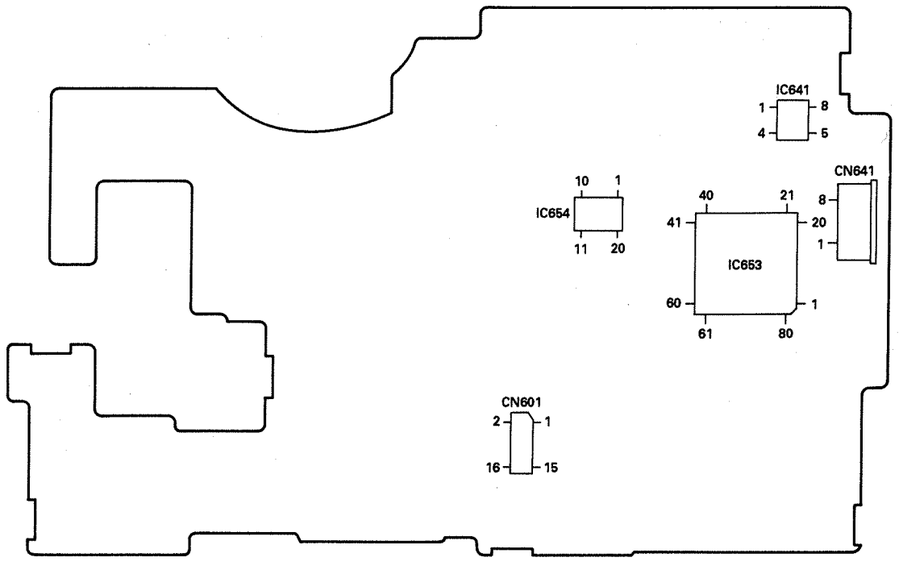

VF-42 BOARD (COMPONENT SIDE)

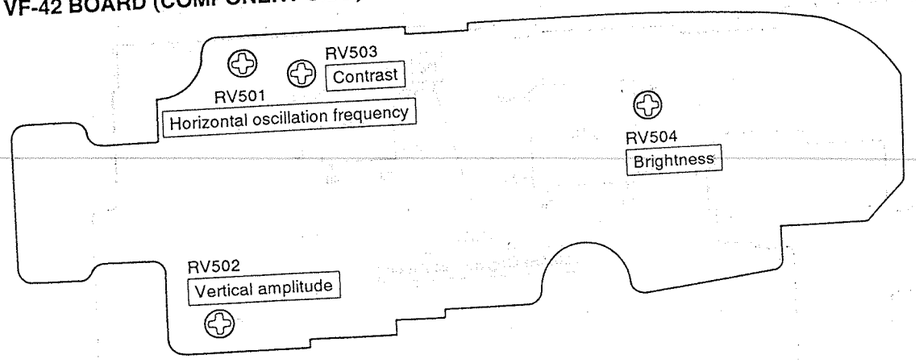

VF-42 BOARD (CONDUCTOR SIDE)

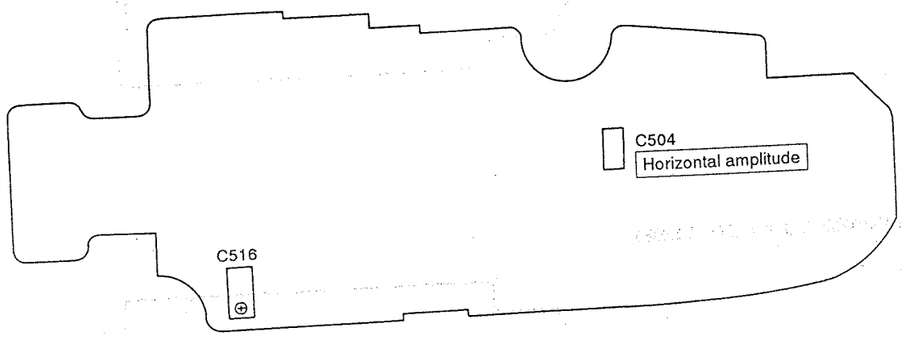

SECTION 8
MECHANICAL SECTION ADJUSTMENTS

For Mechanical Adjustments

Refer to the separate volume of mechanical adjustment "8 mm Video MECHANICAL ADJUSTMENT MANUAL Ⅳ (A Mechanism)" for the adjustments and checks of mechanism section and the mechanical parts replacement. (9-973-199-11)
For setting of the track shift mode, however, refer to the following.

8-1. SETTING THE TRACK SHIFT MODE

Note: Camera part and video part should have been installed.

[Setting Method]

1) Set the adjustment commander to the HOLD ON side.
2) Set page: 1, address: 01 and data: 01, and then release the protector.
3) Set page: D and address: 01.
4) Set adjustment data to 03 (test mode 3) by PLAY or STOP button.
   (When HOLD OFF once after the setting and HOLD ON again, the display of the address data will be changed. To set the another mode with shifting, repeat the procedures from 3).
5) Set to the HOLD OFF side in order to set the normal mode.

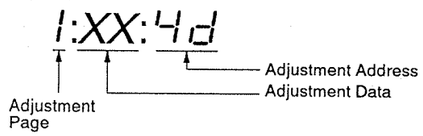

8-2. PREPARATION FOR ADJUSTMENT

1) Clean the tape running surfaces (tape guides, drum, capstan shaft, pinch roller.)
2) Connect to the oscilloscope.
   CH1: VS-99 board CN002 pin ③ (PB RF)
   CH2: VS-99 board CN002 pin ④ (RF SWP)
3) Play back the tracking alignment tape (WR5-1CP: 8-967-995-07).
4) Check that the RF waveform of the oscilloscope is flat at both inlet and outlet side. (Refer to Fig. 8-1 and 8-2)
   If not flat, perform necessary adjustment according to the separate 8 mm Video Mechanical Adjustment Ⅳ (A Mechanism).

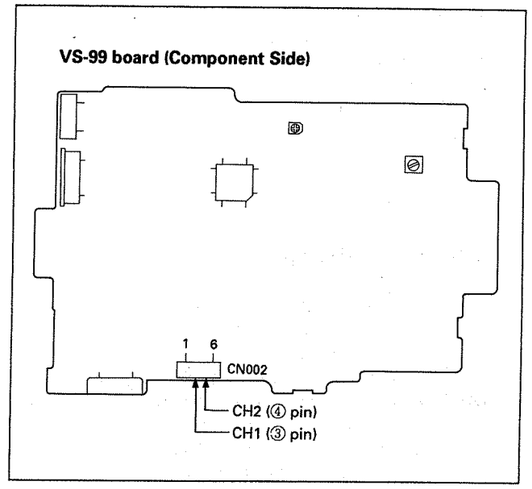

Fig.8-1.

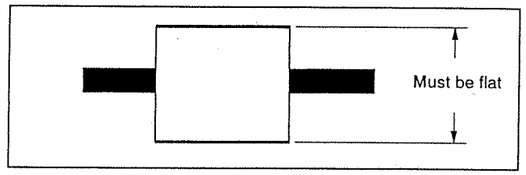

Fig.8-2.

SECTION 9
VIDEO SECTION ADJUSTMENTS

When performing adjustments, refer to the layout diagrams for adjustment related parts beginning from page 252.

9-1. PREPARATIONS BEFORE ADJUSTMENT

The following measuring equipments are used for adjusting the video section.

9-1-1. Equipments Used

1) TV monitor
2) Oscilloscope 2 phenomena, band 30 MHz or wider, with delay mode. (Use a 10:1 probe unless specified otherwise.)
3) Frequency counter
4) Pattern generator with video output terminal
5) Digital voltmeter
6) Audio generator
7) Audio level meter
8) Audio distortion meter
9) Audio attenuator
10) Regulated power supply
11) Alignment tape
    For tracking adjustment (WR5-1CP)
    Part Code: 8-967-995-07
    For video frequency characteristics adjustment (WR5-6C)
    Part Code: 8-967-995-17
    For checking operations (WR5-4CL)[Note 1]
    Part Code: 8-967-995-56
    (WR5-5CSP)[Note 2]
    Part Code: 8-967-995-47
    Note: The following alignment tapes can also be used.
    1) WR5-3CL (8-967-995-36)
    2) WR5-4CSP (8-967-995-46)
    For checking AFM stereo operations (WR5-9CS)
    Part Code: 8-967-995-28
12) Remote control unit for adjustment (J-6082-053-B)
13) DD-55 board extension cord (40P, 0,8 mm)
    Part Code: J-6082-168-A
14) AU-149 board, extension cord (38P, 0.8 mm)
    Part Code: J-6082-274-A

9-1-2. Precautions upon Adjustment

The EVF (electronic view-finder) section is not required for adjusting the video section.
Remove the following connector when removing the EVF section
1. CN502 of VS-99 board (Pin 6)

The MA-169 board is not required for adjusting the video section.
Remove the following connector when removing the MA-169 board.
1. CN801 of AU-149 board (Pin 13)

The audio board (AU-149 board) is not required other than in the "REC AFM Level Check" of "Audio System Adjustments" and "Video System Adjustments". Remove the following connectors.
1. CN505 of VS-99 board (Pin 38)

The lens block (including CD-105 board, MF-213 board and YP-12 board) is not required other than in "Power supply System Adjustments" . Remove the following connectors and three mounting screws, and remove it from the VC-132 board.
1. CN601 of VC-132 board (Pin 16)
2. CN711 of VC-132 board (Pin 21)
3. CN740 of VC-132 board (Pin 12)
4. CN743 of VC-132 board (Pin 6)

9-1-3. How to Set the REC Mode in the Model without REC Switch

1. REC key forbidden accept mode cancel
   1. Connect the adjusting remote commander to the REMOTE terminal.
   2. Turn on the power.
   3. Turn on the HOLD switch of the adjusting remote commander.
   4. Select the page: 1 address: 00, and set the data to 01. (Protect mode cancel)
   5. Select the page: D address: 02, and set the data to 8B [AB]. (REC key forbidden accept mode cancel)
   6. Press PAUSE button on the adjusting remote commander. (Write to the non-volatile memory)

2. Signal input mode setting
   1. Select the page: 2 address: 00, and set the data to 01. (Specification category 1)
   2. Set data: 01 to page 2, address: 3A. (Input mode set*)
   Note: Setting of output mode.
   Set data: 02 to page 2, address: 3A (category: 1)

The REC key is accepted through the above procedure. The adjusting remote commander may be removed, gereafter.
Note: After compleating adjustment be sure to perform "4. Procedure after completed adjustment".

3. REC mode setting
   1. Set th HOLD switch of the adjusting remote commander to the OFF (Normal) position.
   2. Press the REC buttons set up REC mode.

4. Procedure after completed the adjustment
   Be sure to return the mode to REC key forbideden accept mode after adjustment.
   1. Connect the adjusting remoter commander to the REMOTE terminal.
   2. Turn on the power..
   3. Turn on the HOLD switch of the adjusting remote commander.
   4. Select the page: 1 address: 00, and set the data to 01. (Protect mode cancel)
   5. Select the page: D address: 02, and set the data to 8A [AA]. (Setting of the REC key forbidden accept mode)
   6. Press PAUSE button on the adjusting remote commander. (Write to the non-volatile memory)

Note: No mark: AEP, UK model
[ ]: E, Australian model

9-1-4. Connector for Adjustments (CN002 of VS-99 Board)

Some video section adjustment points are concentrated at CN002 of the VS-99 board.

Pin No.	Signal Name
1	PB CH1
2	PCM OUT
3	PB RF
4	RF SWP
5	RF GND
6	REC 2CH

Table 9-1.

9-1-5. Connection of Equipments

Unless specified otherwise, connect the measuring instruments as shown in Fig. 9-1. and perform the adjustments.

- Camera/player power switch (S900 of power switch unit) ..... Position of the player
- Connect the adjusting remote commander to the remote terminal (DD-55 board J452).

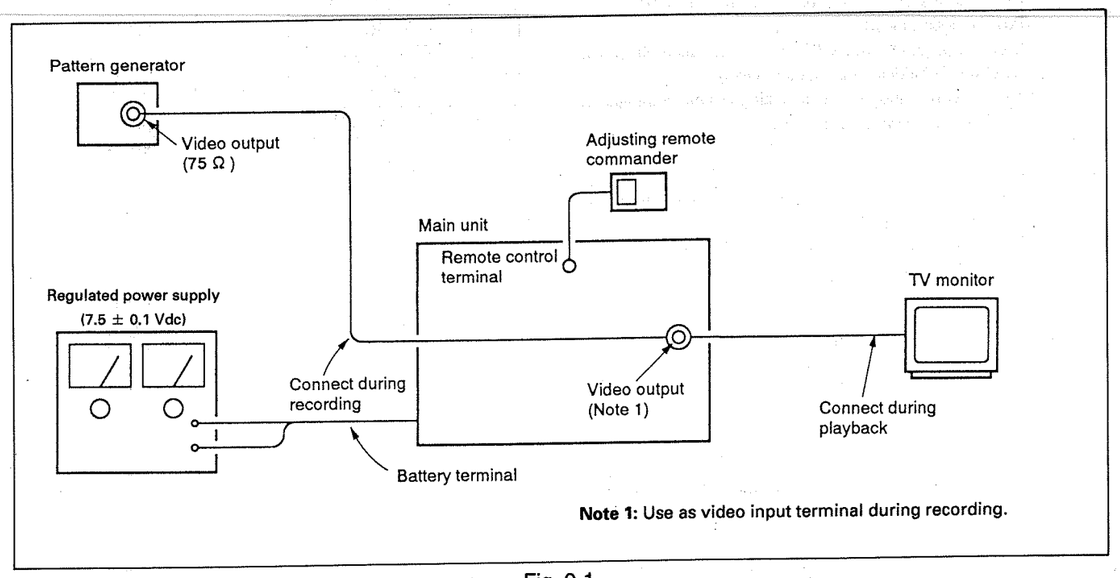

Fig. 9-1.

9-1-6. Checking the Input Signals

Because the video signal obtained from the pattern generator is used as the adjustment signal for adjusting the VTR section, the video output signal must satisfy the given specifications.

1. VIDEO input

Connect the oscilloscope to the video output terminal, and check that the sync signal amplitude of the video signal is approximately 0.3V, the amplitude of the video section is approximately 0.7V, the amplitude of the burst signal is approximately 0.3V and flat, and that the level ratio of the burst signal to the "red" signal is 0.3:0.66.
The video sinal (color bar) used for adjusting the VTR section is shown in Fig. 9-2.

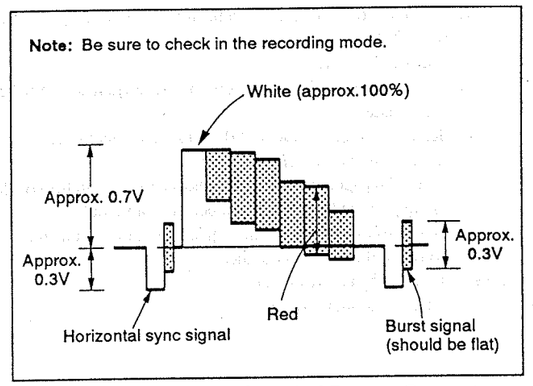

Fig. 9-2. Color Bar Signal of Pattern Generator

9-1-7. Alignment Tape

The following table lists available alignment tapes.
Use the tape specified in the signal column for each adjustment.

If the tape type is not specified for adjustments using tapes to check operations, use any tape for checking operations.

Name	Recording mode	Tape type	Tape speed	Recording Contents: Video area	Recording Contents: PCM area	Usage
Tracking WR5-1CP	L	MP	SP	CH2: Signal for adjusting 1 MHz tape path		Switching position adjustment
Video frequency characteristics WR5-6C	L	MP	LP	Rf sweep 0 to 10 MHz Marker 1, 3.58, 5.5, 7 MHz		Frequency characteristics adjustment
Checking operations (SP mode) WR5-5CSP	L	MP	SP	• Video signal Color bar 4 mins. Monoscope 4 mins. • Audio signal (AFM) 400 Hz 60% modulation	• Audio signal (PCM) Monoscope section 20 Hz 20sec. } Repeated 4 times 400 Hz 20sec. 14kHz 20sec. Color bar section 1 kHz 4 mins.	Checking operations
Checking operations (LP mode) WR5-4CL	L	MP	LP	• Video signal Color bar 4 mins. Monoscope 4 mins. • Audio signal (AFM) 400 Hz 60% modulation		
AFM stereo checking operations WR5-9CS	L	MP	SP	• Video signal Color bar 4 mins. Monoscope 4 mins. • Audio signal (AFM) stereo section (color bar) Lch: 400 Hz, Rch: 1kHz (L+R: 1.5 MHz ± 60kHz DEV L−R: 1.7 MHz ± 30kHz DEV) Bilingual section (Monoscope) MAIN: 400Hz (1.5 MHz ± 60kHz DEV) SUB: 1 kHz (1.7 MHz ± 30kHz DEV)	• Audio signal (PCM) 400Hz 8 mins.	AFM stereo Checking operations

Note: Recording mode
L ..... Normal (convertional) mode
E ..... Hi8 (Hi-band) mode

Tape type
MP ..... Metal particle tape
ME ..... Metal evaporated tape

Table 9-2.

Fig. 9-3. shows the 75% color bar signals recorded on the alignment tape.

Note: Measure using the video output terminal (Terminated at 75 Ω)

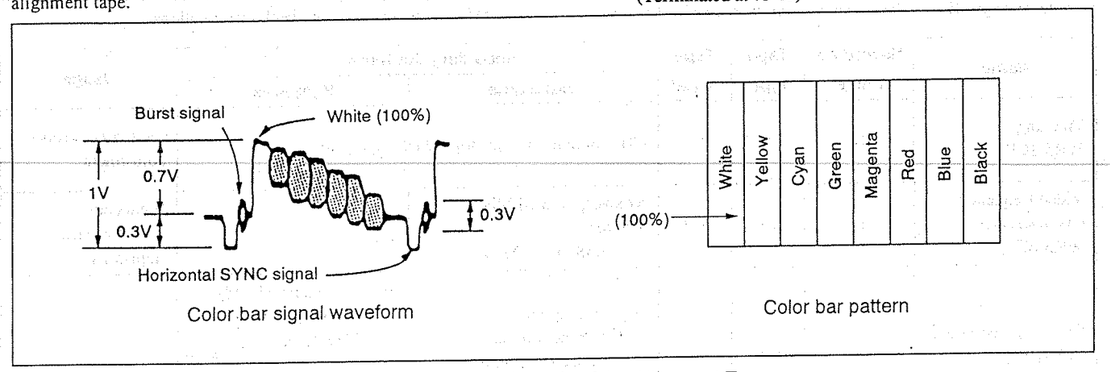

Fig. 9-3. Color Bar Signals of the Alignment Tape

9-1-8. Output Level and Impedance

Video output Pin jack
Output signal: 1 Vp-p, 75 unbalanced, sync negative

Audio output Pin jack
Specified output: –7.5 dBs
Output impedance: Below 2.2 kΩ

9-1-9. Service Mode

1. Setting the service mode

The service mode consists of the adjustment mode which adjusts the EVR and the test mode which shows the condition of the unit.
The unit can be set into the test mode and adjustment mode by connecting the adjusting remote commander (Set the HOLD switch to "HOLD").

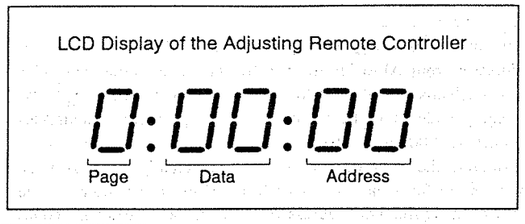

(1) Service LANC memory map

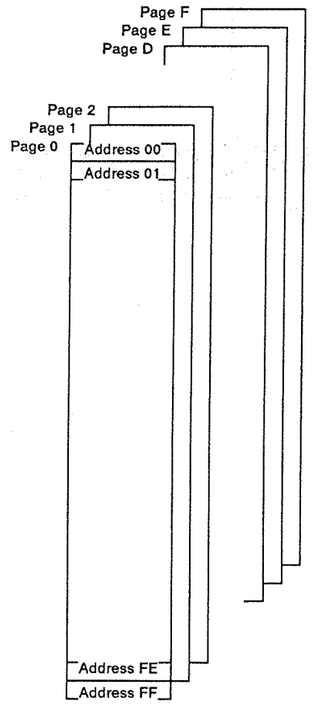

Adjusting remote commander RM-95 (J-6082-053-B)

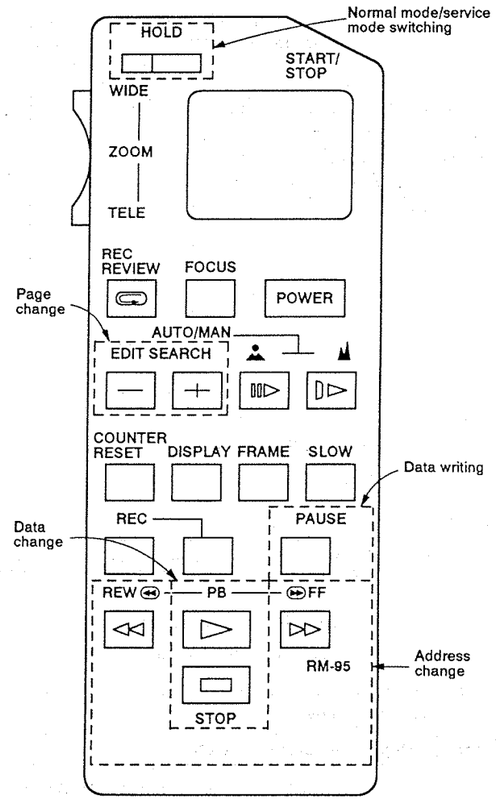

Page	Page Layout
0	
1	D page write protect setting/release
2	Mode controller RAM, I/O (Note 1)
3	Mechanism controller RAM, I/O (Note 1)
4	
5	
6	Shared by camera section (Note 1)
7	Camera controller RAM, I/O (Note 1)
8	AF controller RAM, I/O (Note 1)
9	
A	2 bytes data display
B	
C	VTR EEPROM (Note 2)
D	VTR EEPROM (Note 2)
E	Camera EEPROM (Note 3)
F	Camera EEPROM (Note 3)

Note 1: If the data of this page is rewritten using the adjusting remote commander to set the adjustment mode or test mode, the data will not be written in the EEPROM (nonvolatile memory). Therefore, the original condition (normal condition) can be returned by removing the main power supply (7.5V) and lithium battery.
Note 2: The data of this page is written in the EEPROM (IC901 of VC-132 board).
Note 3: The data of this page is written in the EEPROM (IC601 of VC-132 board).

(2) Category codes

This unit uses category codes for pages 2 and 3. The 256 addresses from 00 to FF are insufficient for the mode controller and mechanism controller to access the RAM. Therefore, new category codes have been used to seemingly increase addresses (Addresses 0000 to FFFF).

However, the data of address 00 are actually used as page numbers to form the 256 pages from 00 to FF, as shown in the following figure. This address 00 data are called category codes to discriminate them from the real page numbers. The new pages are called categories.

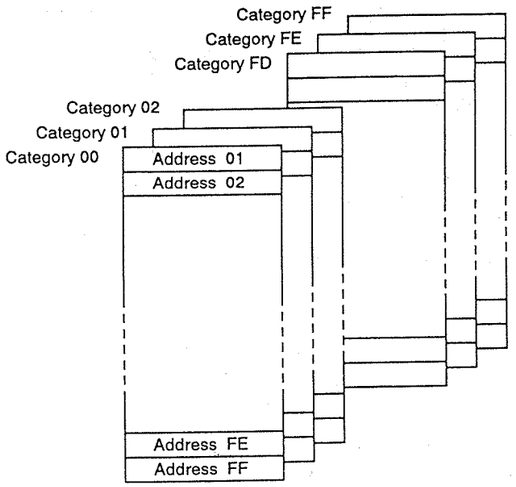

(Supplement) As each category no longer has address 00 as it is, this address cannot be accessed using the adjusting remote commander. Therefore, category 3F is used for accessing address 00.

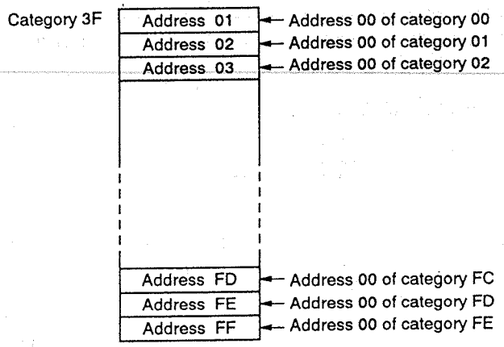

(Example)

Specification of

Page 2	Category 01	Address 15

Page 2 is the mode controller

Page 3 is the mechanism controller

The actual category and address are specified by the adjusting remote commander as follows.

Order	Page	Address	Data	Procedure
1	2	00	01	Select category 01 using the data of page 2, address 00. From here onwards, category 01 will be selected at page 2 until the data of page 2, address 01 is rewritten.
2	2	15		As the data of page 2, address 00 is 01, select page 2, address 15 to select page 2, category 01, address 15. (The data of this address is the battery voltage A/D conversion value of the mode controller input.)

[Shifting to the service mode using the adjusting remote commander]

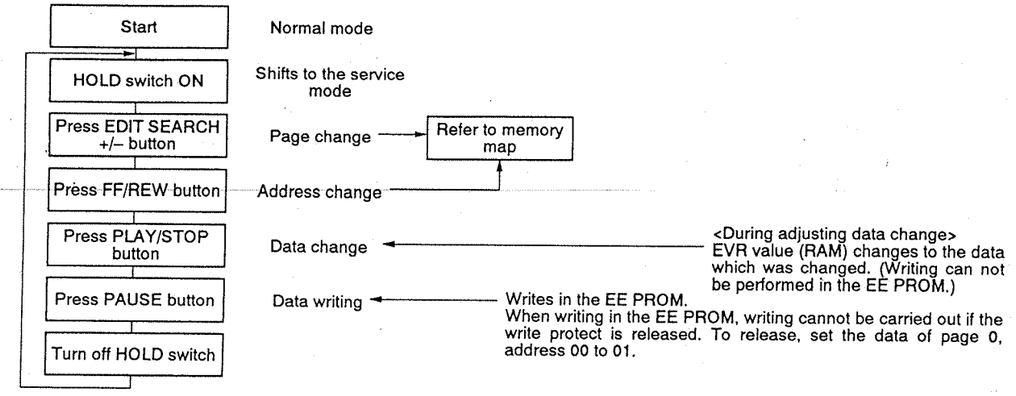

Command Name	Command Function	Normal LANC Command
Page Up	Page+1	Edit Search+
Page Down	Page–1	Edit Search –
Direct Page Set	Sets to the specified page	Event Clear
Address Up	Address+1	Fast Forward
Address Down	Address–1	Rewind
Data Up	Data+1	Play Back
Data Down	Data–1	Stop
Store	Writes data in the EEPROM, RAM	Pause

2. Page D write protect

Release/set the page D write protect.

Page 1	Address 00

Data	Function
00	Normal (Write protect condition)
01	Release the write protect

3. Test mode setting

Set/release each test mode. Release the protect (Page: 1, Address: 00, Data: 01) before setting the data.

Page D	Address 01

Data	Function
00	Normal
01	Test mode 1 Various emergency prohibitions and releases Drum, capstan, loading motor, reel, tape top and end, DEW SP/LP automatic discrimination prohibition, manual switching, 5 minutes pause release prohibition Power off prohibition/release by battery end
02	Test mode 2 Not used
03	Test mode 3 Track shift Performs the track shift playback Rear lock distinction prohibition during PB SP/LP automatic discrimination prohibition, manual switching
04	Test mode 4 Rear lock mode Performs rear lock playback SP/LP automatic discrimination prohibition, manual switching

※ For page D, the data set will be recorded in the nonvolatile memory by pressing the PAUSE button on the adjusting remote commander. Take note that, in this case, the test mode will not be released even if the main power has been turned off (7.5 Vdc).

※ Be sure to return this address data to 00 after completing adjustments/repairs and press the PAUSE button of the adjusting remote commander.

4. Emergency code

Fault (error) symptoms can be checked.

Page D	Address 06

First emergency code
……First error code generated

Page D	Address 07

Last emergency code
……Last error code generated (This data will be renewed each time an error occurs.)

※ Be sure to rewrite the data of addresses 06 and 07 to 00 after repairs/adjustments.

※ When rewriting the data, be sure to press the PAUSE button of the remote commander after setting the data.

Code	Error Condition
00	No error
01	Loading motor error
02	Reel error during unloading
03	Reel errors at other times
04	Capstan error
05	FG error during drum start up
06	PG error during drum start up
07	FG error during normal drum conditions
08	PG error during normal drum conditions
09	Phase error during normal drum conditions

5. Emergency mode

The operation mode can be checked during faults.

Page D	Address 08

First emergency mode
……The operation mode when the first error is generated

Page D	Address 09

Last emergency mode
……The operation mode when the last error is generated
(This data will be renewed each time an error occurs.)

※ Be sure to rewrite the data of addresses 08 and 09 to 00 after repairs/adjustments.

※ When rewriting the data, be sure to press the PAUSE button of the adjusting remote commander after setting the data.

Code	Error Conditions
00	BEFOR INITIALIZE
01	EJECTED
02	NORMAL STOP
03	FF
04	NORMAL REC
06	NORMAL PB
07	PB PAUSE
12	LOADING
14	REC PAUSE
26	X1
27	1/5 SLOW
31	UNLOADING
46	CUE
56	REVIEW
62	STOP TAPE END
66	X2
67	FRAME
72	STOP TAPE TOP
83	REWIND
85	REC REVIEW (+)
95	REC REVIEW (−)
97	−PB PAUSE
A2	EMERGENCY LOADING
A5	EDIT SEARCH (+)
B1	EMERGENCY UNLOADING
B2	STOP EMERGENCY 1
B5	EDIT SEARCH (−)
C2	STOP EMERGENCY 2
E2	STOP NO CASSETTE
F5	EDIT PAUSE

6. Bit value discrimination

Bit values must be discriminated using the display data of the adjusting remote commander for the following items. Use the table below to discriminate if the bit value is "1" or "0".

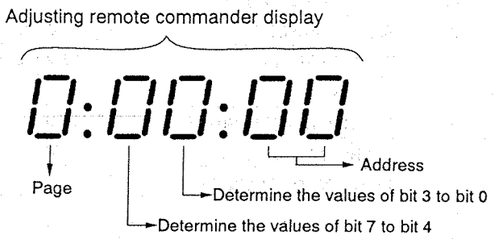

	Remote commander display	Bit value			
		bit 3 or bit 7	bit 2 or bit 6	bit 1 or bit 5	bit 0 or bit 4
	0	0	0	0	0
	1	0	0	0	1
	2	0	0	1	0
	3	0	0	1	1
	4	0	1	0	0
	5	0	1	0	1
	6	0	1	1	0
	7	0	1	1	1
Ⓐ→	8	1	0	0	0
	9	1	0	0	1
	A(A)	1	0	1	0
	B(b)	1	0	1	1
	C(c)	1	1	0	0
	D(d)	1	1	0	1
Ⓑ→	E(E)	1	1	1	0
	F(F)	1	1	1	1

(Example) If the remote commander display data is "8E", bit values from bit7 to bit4 can be discriminated from column Ⓐ, and those from bit3 to bit0 from column Ⓑ.

7. Mode controller input check

Page 2	Category 00	Address 02

Bit	Input Signal	Input Signal Level
0	BATT IN (IC902 ⑮)	"1"=H, "0"=L
1	PB V (IC902 ⑯)	"1"=PB V input present, "0"=No PB V input
2		
3	$\overline{\text{LANC PWR ON}}$ (IC902 ⑱)	"1"=H, "0"=L
4	$\overline{\text{LI PREEND}}$ (IC902 ⑲)	"1"=H, "0"=L
5	$\overline{\text{EEPROM WE}}$ (IC902 ⑳)	"1"=H, "0"=L
6		
7	$\overline{\text{WIND ON}}$ (IC902 ㉒)	"1"=H, "0"=L

Using method:

Order	Page	Address	Data	Procedure
1	2	00	00	Specification of category 00
2	2	02		The H/L of each input signal can be discriminated by differentiating the bit values of the display data.

Page 2	Category 00	Address 1C

Bit	Input Signal	Input Signal Level
0	BATT SENCE (IC902 ㉑)	"1"=L, "0"=H
1		
2	BRIGHT A (IC902 ㉓)	"1"=H
3	BRIGHT B (IC902 ㉔)	"0"=L
4		
5		
6		
7		

Using method:

Order	Page	Address	Data	Procedure
1	2	00	00	Specification of category 00
2	2	1C		The H/L of each input signal can be discriminated by differentiating the bit values of the display data.

8. White balance mode switching

Page 2	Category 00	Address 21

Data	White balance mode
01	Indoor
02	Outdoor
03	Hold
06	Auto

Using method:

Order	Page	Address	Data	Procedure
1	2	00	00	Specification of category 00
2	2	AE	40	Prohibition of camera function renewal
3	2	00	01	Specification of category 1
4	2	21		Specify the white balance mode by setting data 01 to 03 and 06.

9. Zoom position check

Page 2	Category 00	Address 2B, 2C

Address	Data
2B	Zoom position data (lower)
2C	Zoom position data (upper)

Using method:

Order	Page	Address	Data	Procedure
1	2	00	00	Specification of category 00
2	2	2B		Data (00 to FF) indicates lower data of zoom position
3	2	2C		Data (00 to 02) indicates upper data of zoom position. WIDE end: 00 TELE end: 02

10. LCD, LED check

Page 2	Category 00	Address AE

Data	
00	Normal
10	All segments of LCD light up Tally LED lights up

Using method:

Order	Page	Address	Data	Procedure
1	2	00	00	Specification of category 00
2	2	AE	10	All segments of LCD and tally LED light up.

11. Key input check

Page 2	Category 3F	Address 01

Bit	Key Switch	Condition of Switch
0	Date (+) (CF block S924)	"1"=OFF "0"=ON
1	Time (CF block S925)	
2	Cassette eject (DD-55 S451)	
3	Video power supply (Power switch unit S900)	
4	Auto lock (CF block S927)	
5	Start/Stop (SW-222 S904)	
6	CC DOWN (Mechanism section)	
7	Camera power supply (Power switch unit S900)	

Using method:

Order	Page	Address	Data	Procedure
1	2	00	3F	Specification of category 3F
2	2	01		The on/off of each key switch can be discriminated by differentiating the bit values of the display data.

12. Key input check (A/D Port)

Page 2	Category 01	Address 16 to 1A

Address \ Display Data	00 to 10	11 to 4C	4D to 7E	7F to B1	B2 to E7	E8 to FF
16 (AD0: IC902 ⑫)	STOP (CF block S901)	Foward (CF block S902)		Edit search (+) (CF block S904)	Edit search (−) (CF block S905)	No key input
17 (AD1: IC902 ⑬)	Pause (CF block S906)	Rewind (CF block S907)	Playback (CF block S908)	Menu (CF block S909)		No Key input
18 (AD2: IC902 ⑭)	Slow (CF block S910)	Set (CF block S911)	Item (CF block S912)			No key input
19 (AD3: IC902 ⑮)	Program AE (CF block S913)		Focus (CF block S915)		Fader (CF block S917)	No key input
1A (AD4: IC902 ⑯)	Reset (CF block S918)				Steady shot (CF block S922)	No key input

Using method:

Order	Page	Address	Data	Procedure
1	2	00	01	Specification of category 00
2	2	16 to 1A		The key pressed can be discriminated by the display data of each address.

13. Wireless remote commander reception contents check

Page 2	Category 01	Address 11

Display Data	Pressed Key of Wireless Remote Commander
FF	Non
9A	TELE
9B	WIDE
99	Start/Stop
1B	REW
1C	FWD
18	Stop
1A	Playback
19	Pause
5A	Data screen
23	Slow

Using method:

Order	Page	Address	Data	Procedure
1	2	00	01	Specification of category 01
2	2	11		The pressed key of the wireless remote commander can be discriminated by the display data.

14. Battery voltage check

Page 2	Category 01	Address 15

Display Data	Battery Voltage
FF	Approx. 10 Vdc
F0	Approx. 9.4 Vdc
E0	Approx. 8.8 Vdc
D0	Approx. 8.2 Vdc
C0	Approx. 7.5 Vdc
B0	Approx. 6.9 Vdc
A0	Approx. 6.3 Vdc
90	Approx. 5.6 Vdc
80	Approx. 5.0 Vdc

Using method:

Order	Page	Address	Data	Procedure
1	2	00	01	Specification of category 01
2	2	15		The battery voltage can be discriminated by the display data.

※ Voltage measurement accuracy is approx. ± 10%.

15. Mechanism section switch, etc. check

Page 2	Category 00	Address 86

Bit	Switch, etc.	Condition
0	Hi8 MP	"1"=Hi8 MP tape, "0"=Others
1	PB E/L	"1"=Hi8 mode playback, "0"=Others
2	ME/MP	"1"=ME tape, "0"=MP tape
3	REC PROOF	"1"=Recording prohibited, "0"=Recording possible
4		
5	MODE SW 0	Mode switch position*1
6	MODE SW 1	
7	MODE SW 2	

Note 1

MODE SW 0	1	2	POSITION	FUNCTION	$\overline{\text{CC DOWN}}$
1	1	1	BL	Interval of each position	
0	1	1	END	FULL END processing (T side lock removal)	1
0	0	1	EJECT	Cassette compartment ejection	1
1	0	1	USE	EJECTED (Unskate end)	1
0	0	1	LOAD	LOADING (Skate in)	0
1	0	0	READY	NORMAL STOP position	0
1	1	0	TURN	OFF of pinch roller only with PB ↔ REV (oscillating position)	0
0	1	0	RP	PB, REC, RVS, REV, REW	0
0	0	0	FF	FF/CUE	0

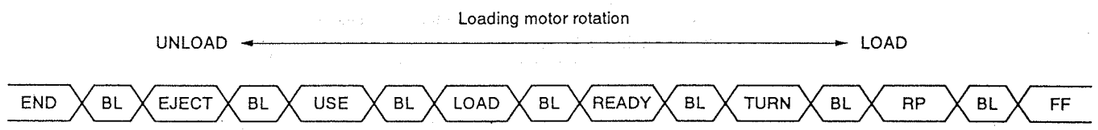

Using method:

Order	Page	Address	Data	Procedure
1	2	00	00	Specification of category 00
2	2	86		The mode switch position can be discriminated by the upper 1 digit of the display data. The conditions of various switches can be discriminated by the bit value of the lower 1 digit.

16. Mechanism controller input/output check

Page 2	Category 00	Address 85

Bit	I/O Signal	Condition
0	PB LP/SP DET	"1"=LP playback, "0"=Others
1	SYNC DET	"1"=VTR SYNC present, "0"=No VTR SYNC
2	REC CLOG	"1"=Clog occurred, "0"=Others
3		
4	JOG	"1"=Variable speed playback, "0"=Others
5	VA PB MODE	"1"=PB mode, "0"=E-E mode
6	AUDIO MUTE	"1"=Mute, "0"=Audio output
7	VIDEO MUTE	"1"=Mute, "0"=Video output

Using method:

Order	Page	Address	Data	Procedure
1	2	00	00	Specification of category 00
2	2	85		The condition of each input/output signal can be discriminated by differentiating the bit value of the display data.

17. Mechanism controller input check

Page 2	Category 00	Address 89

Bit	I/O Signal	Condition
0	$\overline{\text{S IN}}$	"0"=S VIDEO terminal connection condition, "1"=S VIDEO terminal open condition
1	$\overline{\text{DEW DET}}$	"0"=Condensation occurred, "1"=Others
2		
3		
4	$\overline{\text{MIC MONO}}$	"0"=During monaural external microphone use, "1"=Others
5	$\overline{\text{JACK MONO}}$	"0"=Audio output terminal (right) connection condition. "1"=Audio output terminal (right) open condition.
6	PB 1.7M DET	"1"=During AFM stereo/bilingual tape playback, "0"=Others
7		

Using method:

Order	Page	Address	Data	Procedure
1	2	00	00	Specification of category 00
2	2	89		The condition of each input signal can be discriminated by differentiating the bit values of the display data.

18. Mechanism controller A/D port input voltage check

Page 3	Category 02	Address 14

Display Data	A/D Port Input Voltage
00 to FF	Approx. 0 Vdc to approx. 5 Vdc

Using method:

Order	Page	Address	Data	Procedure
1	3	00	02	Specification of category 02
2	3	0E	02	Permission for A/D conversion operations
3	3	13		Set the data according to the following table, and specify the A/D port of the mechanism controller.
4	3	14		The A/D port input voltage can be discriminated according to the display data.

Data	Mechanism Controller Port
00	⑥⓪ pin; AN0, T REEL FG
01	⑤⑨ pin; AN1, S REEL FG
02	⑤⑧ pin; AN2, ATF ERROR
03	⑤⑦ pin; AN3, BATT SENSE
04	⑤⑥ pin; AN4, $\overline{\text{DEW DET}}$
05	⑤⑤ pin; AN5, TAPE TOP
06	⑤④ pin; AN6, TAPE END

19. Tape top/end sensor check

Page 3	Category 02	Address 0A

Display Data	Tape Top/End Sensor Condition
00	Tape present (Middle of tape)
01	Tape end
10	Tape top
11	No tape

Tape end sensor condition
Tape top sensor condition

"0"=Non active (Not receiving light)
"1"=Active (Receiving light)

Using method:

Order	Page	Address	Data	Procedure
1	3	00	02	Specification of category 02
2	3	0E	10	Request for tape top/end sampling operations
3	3	0A		The condition of the tape top/end sensor can be discriminated by the display data.

20. Individual operations of the drum, capstan, and loading motor

Page 3	Category 02	Address 11

Display	Operations
00	Normal
02	Drum in normal rotation
04	Drum in reverse rotation
06	Capstan in normal rotation
08	Capstan in reverse rotation
0A	Loading motor in normal rotation
0C	Loading motor in reverse rotation
01	All motors stop
03	
05	
07	
09	
0B	
0D	
0F	

Using method:

Order	Page	Address	Data	Procedure
1	3	00	02	Specification of category 02
2	3	0E	01	Permission for individual operations of motor
3	3	11		The motor can be operated individually by setting the data indicated above.
4				Turn off the main power supply (7.5 Vdc).

21. Version of mechanical control microprocessor

Page 3	Category 02	Address 0B

Data	Microprocessor version
01	Version 1 (CXP80624A-019R: VS-99 board IC501)

22. Page D address list

Note 1: The adjustment data initial value is the data input before performing video section adjustments (Page D) if the Page D data has been erased due to some reason.

Note 2: The data written in the adjustment data memo column are fixed.
After adjusting, check that these data have not been rewritten by mistake.

*1 No mark : AEP, UK model
[ ] : E, Australian model

Address	Name	Function [ ] contains the adjustment voltage output terminal	Adjustment data Initial value	Memo column
00		Not used	FF	FF
01	Test mode	Test mode	00	00
02	Destination flag	Destination flag	8A[AA]*1	8A[AA]*1
03	BATT END	Battery end adjustment	8D	
04	SW POSITION (LOW)	SW POSITION adjustment [Lower]	80	
05	SW POSITION (HIGH)	SW POSITION adjustment [Upper]	0B	
06	EMERGENCY code (FIRST)	Error codes and modes are recorded in the memory. Rewrite the data of these addresses to 00 after repairs/adjustments.	00	00
07	EMERGENCY code (LAST)		00	00
08	EMERGENCY mode (FIRST)		00	00
09	EMERGENCY mode (LAST)		00	00
0A	SR DATA (MP NORMAL SP)	CXA1207 serial data	28	28
0B	SR DATA (MP NORMAL LP)	CXA1207 serial data	3E	3E
0C	SR DATA (ME HI8 SP)	CXA1207 serial data	2C	2C
0D	SR DATA (ME HI8 LP)	CXA1207 serial data	28	28
0E	SR DATA (ME NORMAL SP)	CXA1207 serial data	28	28
0F	SR DATA (ME NORMAL LP)	CXA1207 serial data	3E	3E
10	SR DATA (MP HI8 SP)	CXA1207 serial data	3C	3C
11	SR DATA (MP HI8 LP)	CXA1207 serial data	3C	3C
12	SR DATA (EDIT ON NORMAL)	CXA1207 serial data	28	28
13	SR DATA (EDIT ON HI8)	CXA1207 serial data	28	28
14		Not used	FF	FF
15		Not used	FF	FF
16		Not used	FF	FF
17		Not used	FF	FF
18		Not used	FF	FF
19		Not used	FF	FF
1A		Not used	FF	FF
1B		Not used	FF	FF
1C		Not used	FF	FF
1D		Not used	00	00
1E		Not used	00	00
1F		Not used	00	00
20	VARIATION	DDS display start year, EJECT permission, MUTE.	05	05
21	ADJUST MODE	CAM P ON, VTR P ON, etc.	00	00
22 – 26		Not used	FF	FF
27	BATT HUNTING PREVENTION LEVEL	Battery hunting prevention threshold level	00	
28	BATT REF	Battery pre end	8F	

Table 9-3 (1).

Address	Name	Function [ ] contains the adjustment voltage output terminal	Adjustment data Initial value	Memo column
29	MECH SW	Mechanism control switch	06	06
2A	TRAC FWD ADJUST	Slow brake (Foward)	00	00
2B	TRAK REV ADJUST	Slow brake (Reverse)	00	00
2C	STILL BRK ADJUST	Still brake	00	00
2D	BATT REF (LOW)	Amount of remaining battery (Low)	94	
2E	BATT REF (MID)	Amount of remaining battery (Mid)	99	
2F	BATT REF (FULL)	Amount of remaining battery (Full)	A0	
30 – 39		Not used	FF	FF
3A	MT' CH	MT' CH	AA	AA
3B – 3D		Not used	FF	FF
3E	MT 2A (E)	Hi8 2Ach frequency characteristics adjustment	88	
3F	MT 2A (L)	Normal 2Ach frequency characteristics adjustment (⑫ of IC003)	88	
40		Not used	FF	FF
41		Not used	FF	FF
42	MT 1A (E)	Hi8 1Ach frequency characteristics adjustment	82	
43	MT 1A (L)	Normal 1Ach frequency characteristics adjustment (③ of IC003)	82	
44		Not used	FF	FF
45		Not used	FF	FF
46	REC C (REC)	REC C level adjustment (EE) (⑨ of IC005)	A1	
47	REC C (PB)	REC C level adjustment (PB) (⑨ of IC005)	00	00
48		Not used	FF	FF
49		Not used	FF	FF
4A	SYNC AGC	EE level adjustment (⑦ of IC005)	62	
4B		Not used	FF	FF
4C	C COMB	Chroma comb type filter adjustment (⑧ of IC005)	A6	
4D	SR IR	IR adjustment (④ of IC005)	AF	
4E	CAR.-E	Hi8 Y-FM carrier frequency adjustment	A8	A8
4F	CAR.-L	Normal Y-FM carrier frequency adjustment (⑥ of IC005)	A8	
50	DEV.-E	Hi8 Y-FM deviation adjustment	98	98
51	DEV.-L	Normal Y-FM deviation adjustment (⑤ of IC005)	98	
52	REC Y (ME E)	Hi8 ME REC Y level adjustment. Not used.	7E	7E
53	REC Y (MP E)	Hi8 MP REC Y level adjustment. Not used.	7E	7E
54	REC Y (ME L)	Normal ME REC Y level adjustment (⑫ of IC005)	7E	
55	REC Y (MP L)	Normal MP REC Y level adjustment (⑫ of IC005)	7E	
56	REC Y (PB)	REC Y level adjustment (PB) (⑫ of IC005)	00	00
57	PB Y (REC)	EE mode PB Y level (② of IC005)	00	00
58	PB Y (E)	Hi8 PB Y level adjustment. Not used	8F	8F
59	PB Y (L)	Normal PB Y level adjustment (② of IC005)	97	
5A	EMPH (EE)	EE emphasis input level adjustment (③ of IC005)	86	
5B	EMPH (PB)	PB emphasis input level adjustment (③ of IC005)	8E	

Table 9-3 (2).

Address	Name	Function [ ] contains the adjustment voltage output terminal	Adjustment data	
			Initial value	Memo column
5C	REC L CONT (ME E SP)	Hi8 ME SP REC level control. Not used	80	80
5D	REC L CONT (MP E SP)	Hi8 MP SP REC level control. Not used	80	80
5E	REC L CONT (ME L SP)	Normal ME SP REC level control	A5	A5
5F	REC L CONT (MP L SP)	Normal MP SP REC level control	88	88
60	REC L CONT (ME E LP)	Hi8 ME LP REC level control. Not used	80	80
61	REC L CONT (MP E LP)	Hi8 MP LP REC level control. Not used	80	80
62	REC L CONT (ME L LP)	Normal ME LP REC level control	A5	A5
63	REC L CONT (MP L LP)	Normal MP LP REC level control	88	88
64	PILOT CONT (ME)	ME pilot control	95	95
65	PILOT CONT (MP)	MP pilot control	84	84
66		Not used	FF	FF
67		Not used	FF	FF
68	D. CLIP (ME E SP)	Hi8 ME SP DARK CLIP. Not used.	4D	4D
69	D. CLIP (MP E SP)	Hi8 MP SP DARK CLIP. Not used.	79	79
6A	D. CLIP (ME L SP)	Normal ME SP DARK CLIP (⑥ of IC003)	23	23
6B	D. CLIP (MP L SP)	Normal MP SP DARK CLIP (⑥ of IC003)	23	23
6C	D. CLIP (ME E LP)	Hi8 ME LP DARK CLIP. Not used.	4D	4D
6D	D. CLIP (MP E LP)	Hi8 MP LP DARK CLIP. Not used.	79	79
6E	D. CLIP (ME L LP)	Normal ME LP DARK CLIP (⑥ of IC003)	2F	2F
6F	D. CLIP (MP L LP)	Normal MP LP DARK CLIP (⑥ of IC003)	2F	2F
70	W. CLIP (ME E SP)	Hi8 ME SP WHITE CLIP. Not used	77	77
71	W. CLIP (MP E SP)	Hi8 MP SP WHITE CLIP. Not used	4F	4F
72	W. CLIP (ME L SP)	Normal ME SP WHITE CLIP (⑤ of IC003)	C7	C7
73	W. CLIP (MP L SP)	Normal MP SP WHITE CLIP (⑤ of IC003)	C7	C7
74	W. CLIP (ME E LP)	Hi8 ME LP WHITE CLIP. Not used	77	77
75	W. CLIP (MP E LP)	Hi8 MP LP WHITE CLIP. Not used	4F	4F
76	W. CLIP (ME L LP)	Normal ME LP WHITE CLIP (⑤ of IC003)	A7	A7
77	W. CLIP (MP L LP)	Normal MP LP WHITE CLIP (⑤ of IC003)	A7	A7
78	REC/PB MX (REC)	REC matrix adjustment (⑲ of IC005)	61	
79	REC/PB MX (PB)	PB matrix adjustment (⑲ of IC005)	A0	
7A	1.5 IR	1.5 MHz IR adjustment (⑬ of IC003). Not used.	B0	
7B	1.5 DEV	1.5 MHz deviation adjustment (⑦ of IC003)	9B	
7C	1.7 IR	1.7 MHz IR adjustment (④ of IC003). Not used.	B0	
7D	1.7 DEV	1.7 MHz deviation adjustment (⑧ of IC003)	AB	
7E	A FADER	Auto fader (⑬ of IC005)	FF	FF
7F	ID VCO	EVR ID VCO	00	
80	ZOOM CONT B	Zoom control B	FF	FF
81	ZOOM CONT A	Zoom control A	FF	FF

Table 9-3 (3).

Address	Name	Function [ ] contains the adjustment voltage output terminal	Adjustment data	
			Initial value	Memo column
82－DF		Not used	FF	FF
E0	NEST DEF BIT	CCD imager correction pattern (for backup)	00	
E1	CCD DEFECT 0	CCD imager correction data (for backup) ※Refer to "7-2. 8 CCD Imager Correction Data Writing" of Camera Section Adjustments.	00	
E2	CCD DEFECT 1		00	
E3	CCD DEFECT 2		00	
E4	CCD DEFECT 3		00	
E5	CCD DEFECT 4		00	
E6	CCD DEFECT 5		00	
E7	CCD DEFECT 6		00	
E8	CCD DEFECT 7		00	
E9	CCD DEFECT 8		00	
EA	CCD DEFECT 9		00	
EB	CCD DEFECT 10		00	
EC	CCD DEFECT 11		00	
ED	CCD DEFECT 12		00	
EE	CCD DEFECT 13		00	
EF	CCD DEFECT 14		00	
F0－FF		Establishment area		

Table 9-3 (4).

9-2. ADJUSTING POINTS WHEN REPLACING MAIN PARTS

1. When replacing drum

"Switching Position Adjustment" of "Servo System Adjustments"
"Playback Frequency Characteristics Adjustment" of "Video System Adjustments"

9-3. POWER SUPPLY SYSTEM ADJUSTMENTS

1. Oscillator frequency check (DD-55 board)

Mode	Camera record
Subject	Arbitrary
Measurement Point	Q454 collector
Measuring Instrument	Frequency counter
Specified Value	460 ± 30 kHz

2. Power supply voltage check (DD-55 board)

Mode	Camera record
Subject	Arbitrary
Measuring Instrument	Digital voltmeter
EVF 5V check	
Measurement Point	Pin ㉔ of CN451
Specified Value	4.99 ± 0.15 Vdc
SS5V check	
Measurement Point	Pin ㉒ of CN451
Specified Value	4.70 ± 0.15 Vdc
D5V check	
Measurement Point	Pins ⑤ and ⑥ of CN451
Specified Value	4.89 ± 0.15 Vdc
D4V check	
Measurement Point	Pin ③ of CN451
Specified Value	3.80 ± 0.15 Vdc
VIDEO 5V check	
Measurement Point	Pins ⑳ and ㉑ of CN451
Specified Value	4.70 ± 0.15 Vdc
AU5V check	
Measurement Point	Pin ㉓ of CN451
Specified Value	4.70 ± 0.15 Vdc
CAM 5V check	
Measurement Point	Pin ① of CN451
Specified Value	4.90 ± 0.15 Vdc
15V check	
Measurement Point	Pin ④ of CN451
Specified Value	15.00 ± 0.4 Vdc
–8.5V check	
Measurement Point	Pin ② of CN451
Specified Value	−8.5 ± 0.5 Vdc

9-4. SYSTEM CONTROL SYSTEM ADJUSTMENTS

1. Page D initial value input

If the page D data is erased due to some cause, input the page D initial value before adjusting. For details on the initial value, refer to "Page D Address List" in "9-1-9. Service Mode". Input the CCD correction data (Page F, addresses 1F to 2E) to addresses E0 to EF as backup data. For details, refer to "CCD correction data writing" of "Camera Section Adjustments".

Mode	Stop
Signal	Arbitrary
Adjustment Page	D
Adjustment Address	00 to 8F, E0 to EF

Inputting method:

Order	Page	Address	Data	Procedure	Conditions
1	**1**	**00**	**01**	**Releasing of protect.**	
2	D	00~8F		Input the data (initial value) according to the "Page D Address List". After setting each data, be sure to press the PAUSE button.	
3	D	E0		Set the data of page F address 1F, and press the PAUSE button.	
		E1		Set the data of page F address 20, and press the PAUSE button.	
		E2		Set the data of page F address 21, and press the PAUSE button.	
		⋮		⋮	
		EF		Set the data of page F address 2E, and press the PAUSE button.	

2. Battery end adjustment

Mode	Camera record, auto focus off
Subject	Arbitrary
Measurement Point	LCD display of the adjusting remote commander
Measuring Instrument	
Adjustment Page	D
Adjustment Address	03 (BATT END) 27 (BATT HUNTING PREVENTION LEVEL) 28 (BATT REF) 2D (BATT REF (LOW)) 2E (BATT REF (MID)) 2F (BATT REF (FULL))

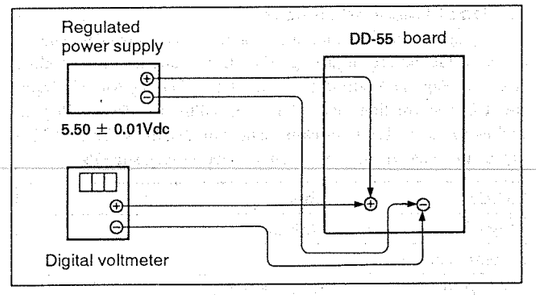

Fig. 9-4.

Connection:

1) Connect the regulated power supply and the digital voltmeter as shown in Fig. 9-4.

Adjusting method:

Order	Page	Address	Data	Procedure	Conditions
1				Adjust the output voltage of the regulated power supply so that the digital voltmeter display becomes 7.5 ± 0.1 Vdc.	
2				Set the camera recording mode. The auto focus turns off.	
3	**1**	**00**	**01**	**Releasing of protect.**	
4	D	01	01	Set the data, and press the PAUSE button. (Setting of TEST MODE 1)	
5				Adjust the output voltage of the regulated power supply so that the digital voltmeter display becomes 5.50 ± 0.01 Vdc.	
6	2	00	01	Specification of page 2, category 1.	
7	2	15		Read the adjusting remote commander display data and take it as DEND.	
8	D	03		Set DEND, and press the PAUSE button.	
9				Convert DEND to decimal to obtain DEND'. (Refer to Table 7-5., "Hexadecimal-Decimal Conversion Table")	
10				Obtain the adjustment data (decimal) by following formula (decimal notation calculation), convert to hexadecimal and enter the data into each adjustment address.	
11	D	2F 2E 2D 28 27		$D_{2F}'=D_{END}'+19$ $D_{2E}'=D_{END}'+17$ $D_{2D}'=D_{END}'+13$ $D_{28}'=D_{END}'+4$ $D_{27}'=D_{END}'-5$ **Note:** After setting the data, be sure to press the PAUSE button of the adjusting remote commander befor changing address.	
12	D	01	00	Set the data, and press the PAUSE button. (Releasing of TEST MODE 1)	
13				Perform "Battery Down check"	

3. Battery down check

Mode	Camera record
Subject	Arbitrary

Connection

1) Connect the regulated power supply and the digital voltmeter as shown in Fig. 9-4.

Checking method:

Order	Procedure
1	Remove the adjusting remote control unit, and perform the following check. If the check is not satisfied, perform from the beginning again.
2	Adjust the output voltage of the regulated power supply so that the digital voltmeter display becomes 7.5 ± 0.1 Vdc.
3	Set to the camera recording mode.
4	Decrease the output voltage of the regulated power supply so that the digital voltmeter display becomes 5.75 ± 0.01 Vdc.
5	Check that the mark on the EVF (viewfinder) display is not lighted up. (TALLY lamp lights up).
6	Decrease the output voltage of the regulated power supply so that the digital voltmeter display becomes 5.69 ± 0.01 Vdc.
7	Check that the mark and the TALLY lamp on the EVF display on the EVF display blinks every second.
8	Decrease the output voltage of the regulated power supply so that the digital voltmeter display becomes 5.47 ± 0.01 Vdc.
9	Check that the mark and the TALLY lamp on the EVF display are blinking faster, the VTR stops and the power supply turns off.

9-5. SERVO SYSTEM ADJUSTMENTS

1. Switching position adjustment (VS-99 board)

Mode	Playback
Signal	Alignment tape: For adjusting tracking(WR5-1CP)
Measurement Point	CH1: ④ of CN002 (RF SWP) CH2: ③ of CN002 (PB RF)
Measuring Instrument	Oscilloscope
Adjustment Page	D
Adjustment Address	04 (SW POSITION (LOW)) 05 (SW POSITION (HIGH))
Specified Value	t1=0 ± 10 μsec.

Adjusting method:

Order	Page	Address	Data	Procedure	Conditions
1	**1**	**00**	**01**	**Releasing of protect.**	
2	D	05	80	Initial setting.	
3	D	05		Change the data with the PLAY and STOP buttons, and minimize t1.	Playback mode
4	D	05		Press the PAUSE button.	
5	D	04		Change the data with the PLAY and STOP buttons, and minimize t1.	Playback mode
6	D	04		Press the PAUSE button.	
7				Check that t1 satisfies the specified value. If not, repeat steps 3 to 7 in order.	

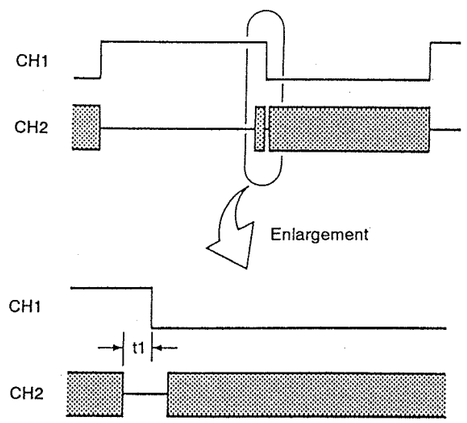

Fig. 9-5.

9-6. VIDEO ADJUSTMENTS

Basically, the video system must be adjusted according to the following adjustment procedures.
The color video signal supplied from the pattern generator is used as the video input signal for adjusting the video system in the recording mode. Check that the sync signal and the color burst signal satisfy the standards specified for the set-ups for adjustments shown in Fig. 9-2.

[Adjusting procedure]

1) Playback frequency characteristics adjustment
2) Flying erase check
3) VXO oscillation frequency check
4) EE level adjustment
5) IR adjustment
6) Chroma comb filter adjustment
7) Emphasis input level adjustment
8) PB Y level adjustment
9) PB line out level adjustment
10) Y FM deviation adjustment
11) Y carrier frequency adjustment
12) Chroma emphasis fo adjustment
13) REC Y level adjustment
14) REC C level adjustment
15) REC ATF level check
16) REC AFM level check
17) Chroma comb filter fine adjustment

1. Playback frequency characteristic adjustment (VS-99 board)

Note: The adjusting element for CH2 is shown in parentheses [ ].

Mode	Playback
Signal	Alignment tape: For adjusting frequency characteristics (WR5-6C)
Measurement Point	CH1: Pin ③ of CN002 (PB RF) EXT TRIG: Pin ④ of CN002 (RF SWP)
Measuring Instrument	Oscilloscope TRIG SLOPE: +[−]
Adjustment Page	D
Adjustment Address	43 (MT 1A (L)) [3F (MT 2A (L))] 42 (MT 1A (E)) [3E (MT 2A (E))]
Specified Value	3.58 MHz level: 5.5 MHz level= 4: (3.0±0.3)

Adjusting method:

Order	Page	Address	Data	Procedure	Conditions
1	**1**	**00**	**01**	**Releasing of protect.**	
2	D	05		After memorizing the data, set the data to 10.	Playback mode
3	D	05		Press the PAUSE button	
4	D	43 [3F]		Change the data with the PLAY and STOP buttons, and adjust the level ratio of 3.58 MHz and 5.5 MHz of PB RF output waveform to the specified value **Note:** After each address adjustment, be sure to press the PAUSE button of the adjusting remote commander and memorize the data.	Playback mode
5	D	42 [3E]		Set the data, same data as address 43 Set the data, same data as address 3F	
6	D	05		Set the data memorized at step 2), and press the PAUSE button of the adjusting remote commander.	

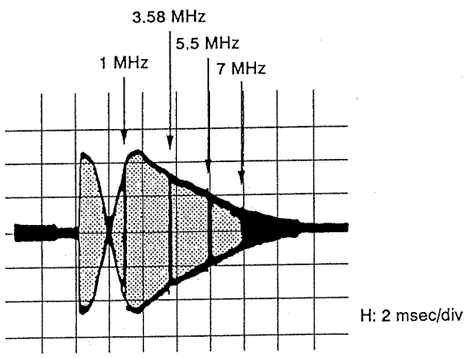

Fig. 9-6.

2. Flying erase check (VS-99 board)

Mode	Record
Signal	Arbitrary
Measurement Point	Pin ② of W001 (FE (X))
Measuring Instrument	Oscilloscope and frequency counter
Specified Value	Frequency: Above 7.5 MHz Voltage: Above 5.5 Vp-p (ME tape) Above 7.0 Vp-p (MP tape)

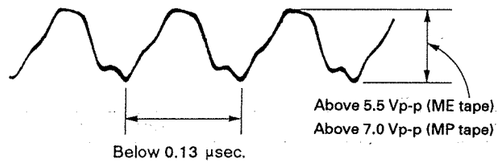

Fig. 9-7.

3. VXO oscillation frequency check (VS-99 board)

Mode	Playback
Signal	Any tape
Measurement Point	Pin ⑫ of IC301 (FSC OUT)
Measuring Instrument	Frequency counter
Specified Value	4433619±70 Hz

Note: Connect the frequency counter via a high impedance (approximately 10 MΩ) and low capacity (below 10 pF) buffer.

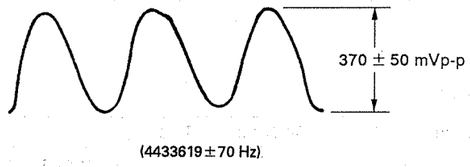

Fig. 9-8.

4. EE level adjustment (VS-99 board)

Mode	E-E
Signal	Color bar
Measurement Point	Pin ② of CN101 (VIDEO OUT)[Note]
Measuring Instrument	Oscilloscope
Adjustment Page	D
Adjustment Address	4A (SYNC AGC)
Specified Value	A=1.00±0.05 V

Note: Terminate pin ② of CN101 at 75 Ω .
After completing adjustments, remove the 75 Ω resistor.

Adjusting method:

Order	Page	Address	Data	Procedure	Conditions
1	**1**	**00**	**01**	**Releasing of protect.**	
2	D	4A		Change the data with the PLAY and STOP buttons, and adjust the Y signal level (A) to the specified value.	E-E mode
3	D	4A		Press the PAUSE button.	

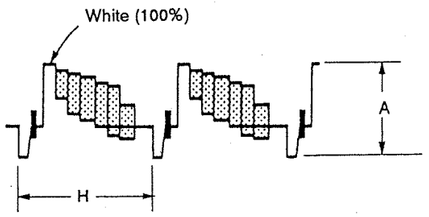

Fig. 9-9.

Related Adjustments:
"Emphasis input level adjustment", "PB Y level adjustment", "Y FM carrier frequency adjustment", "Y FM deviation adjustment".

5. IR adjustment (VS-99 board)

Mode	Record
Signal	Color bar
Measurement Point	Pin ⑦ of IC201 (YCOMB OUT)
Measuring Instrument	Oscilloscope
Adjustment Page	D
Adjustment Address	4D (SR IR)
Specified Value	Minimum residual chroma component (A) (Below 80 mVp-p)

Connection:
1) Connect Pin ⑭ of IC201 (or Pin ② of IC202) and Pin ㊶ of IC201 with a jumper wire

Adjusting method:

Order	Page	Address	Data	Procedure	Conditions
1				Check that the input is "VIDEO".	
2	**1**	**00**	**01**	**Releasing of protect.**	
3	D	4D		Change the data with the PLAY and STOP buttons, and minimize the residual chroma component (A).	Recording mode Connect Pin ② of IC202 and Pin ㊶ of IC201 with a jumper wire.
4	D	4D		Press the PAUSE button.	

Note: Remove the lens block and adjust.

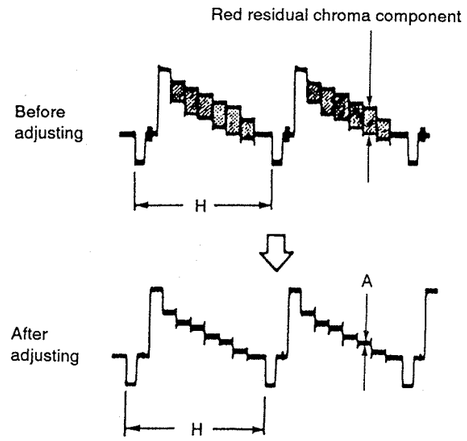

Fig. 9-10.

Related Adjustments:
"Emphasis input level adjustment", "PB Y level adjustment", "Y FM deviation adjustment", "Y FM carrier frequency adjustment".

6. Chroma comb filter adjustment (VS-99 board)

Mode	Record
Signal	Color bar
Measurement Point	Pin ⑪ of IC201 (C+CD)
Measuring Instrument	Oscilloscope
Adjusting Element	RV161 (Phase)
Adjustment Page	D
Adjustment Address	4C (C COMB)
Specified Value	Minimum residual chroma component (A)

Adjusting method:

Order	Page	Address	Data	Procedure	Conditions
1				Check that the input is "VIDEO".	
2	1	00	01	**Releasing of protect.**	
3				Minimize the residual chroma component (A) with RV161	Recording mode
4	D	4C		Change the data with the PLAY and STOP buttons, and minimize the residual chroma component.	Recording mode
5	D	4C		Press the PAUSE button.	
6				Repeat steps 3 to 5 in order.	

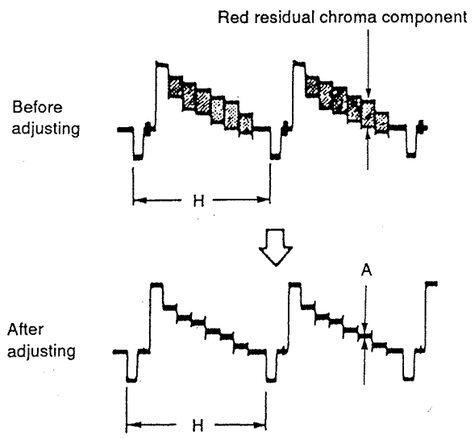

Fig. 9-11.

Related Adjustments:
"Chroma comb filter fine adjustment".

7. Emphasis input level adjustment (VS-99 board)

Mode	Record
Signal	Color bar
Measurement Point	Pin ③ of IC201 (EMPH IN)
Measuring Instrument	Oscilloscope
Adjustment Page	D
Adjustment Address	5A (EMPH (EE))
Specified Value	A=0.50±0.025V

Adjusting method:

Order	Page	Address	Data	Procedure	Conditions
1	1	00	01	**Releasing of the protect.**	
2	D	5A		Change the data with the PLAY and STOP buttons, and adjust the Y signal level (A) to the specified value.	Recording mode
3	D	5A		Press the PAUSE button.	

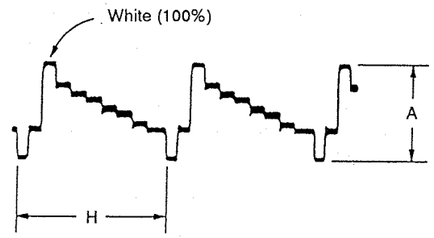

Fig. 9-12.

Related Adjustments:
"PB Y level adjustment", "Y FM deviation adjustment".

8. PB Y level adjustment (VS-99 board)

Mode	Playback
Signal	Alignment tape: For checking operations (WR5-5CSP) Color bar section
Measurement Point	Pin ㉑ of IC201 (DL IN 1)
Measuring Instrument	Oscilloscope
Adjustment Page	D
Adjustment Address	59 (PB Y L)
Specified Value	A=0.50±0.025V

Adjusting method:

Order	Page	Address	Data	Procedure	Conditions
1	**1**	**00**	**01**	**Releasing of protect.**	
2				Play back the color bar section of the normal mode alignment tape.	
3	D	59		Change the data with the PLAY and STOP buttons, and adjust the playback signal level (A) to the specified value.	Play back WR5-5CSP.
4	D	59		Press the PAUSE button.	

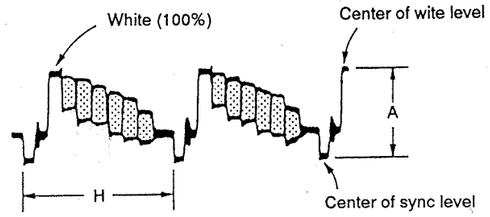

Fig. 9-13.

9. PB line out level adjustment

Mode	Playback
Signal	Alignment tape: For checking operations (WR5-5CSP) Color bar section
Measurement Point	Video output terminal (terminated at 75 Ω)
Measuring Instrument	Oscilloscope
Adjustment Page	D
Adjustment Address	5B (EMPH (PB))
Specified Value	A=1.0±0.05V

Adjusting method:

Order	Page	Address	Data	Procedure	Conditions
1	**1**	**00**	**01**	**Releasing of the protect.**	
2	D	5B		Change the data with the PLAY and STOP buttons, and adjust the video signal level (A) to the specified value.	Playback mode
3	D	5B		Press the PAUSE button.	

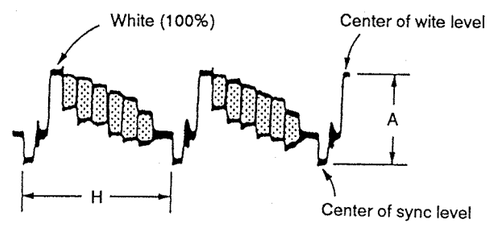

Fig. 9-14.

10. Y FM deviation adjustment (VS-99 board)

Mode	Record and playback
Signal	Color bar
Measurement Point	Pin ㉑ of IC201 (DL IN 1)
Measuring Instrument	Oscilloscope
Adjustment Page	D
Adjustment Address	51 (DEV. –L)
Specified Value	A=0.50±0.025V

Note: Check that the "Emphasis input level adjustment" and "PB Y level adjustment" have been completed.

Adjusting method:

Order	Page	Address	Data	Procedure	Conditions
1	1	00	01	**Releasing of protect.**	
2				Record the color bar signal.	
3				Play back the recorded signal.	
4				Compare the playback signal level with the specified value. If it satisfies the value, the adjustment is completed.	
5	D	51		If not,: Change the data with the PLAY and STOP buttons. • Decrease the data if the playback signal level is greater than the specified value. • Increase the data if smaller.	
6	D	51		Press the PAUSE button.	

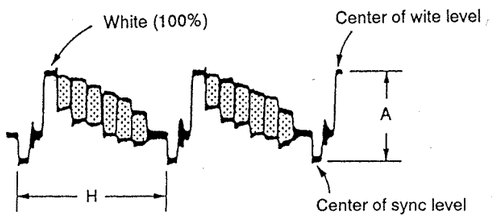

Fig. 9-15.

Related Adjustments:
"Y FM carrier frequency adjustment".

11. Y FM carrier frequency adjustment (VS-99 board)

Mode	Record
Signal	No signal
Measurement Point	Pin ㊸ of IC201 (Y RF OUT)
Measuring Instrument	Frequency counter
Adjustment Page	D
Adjustment Address	4F (CAR. –L)
Specified Value	4.20±0.04 MHz

Adjusting method:

Order	Page	Address	Data	Procedure	Conditions
1	1	00	01	**Releasing of protect.**	
2	D	4F		Change the data with the PLAY and STOP buttons, and adjust the Y FM carrier frequency to the specified value.	Recording mode, no signal input
3	D	4F		Press the PAUSE button.	

Fig. 9-16.

12. Chroma emphasis f0 adjustment (VS-99 board)

Mode	Record
Signal	Color bar
Measurement Point	Pin ㉔ of IC301
Measuring Instrument	Oscilloscope
Adjustment Element	FL302
Adjustment value	Minimum fo components

Connection:

1) Connect pin ㉔ of IC301 to GND with a 3.3 kΩ resistor (1-249-423-11).

Adjusting method:

Order	Page	Address	Data	Procedure	Conditions
1				Minimize the amplitude of the rear part of the yellow section of the chroma signal with FL302.	

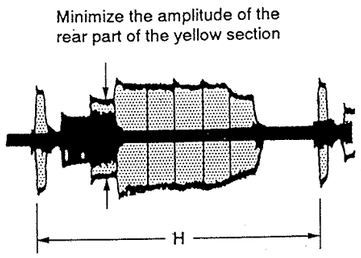

Fig. 9-17.

13. REC Y level adjustment (VS-99 board)

Mode	Record (SP)
Signal	No signal
Measurement Point	Pin ⑥ of CN002 (REC 2CH)
Measuring Instrument	Oscilloscope
Adjustment Page	D
Adjustment Address	54 (REC Y (ME L)), 55 (REC Y (MP L))
Specified Value	• ME mode A=175±5 mVp-p • MP mode A=175±5 mVp-p

Note: Use a MP type tape

Adjusting method:

Order	Page	Address	Data	Procedure	Conditions
1	**1**	**00**	**01**	**Releasing of protect.**	
2	D	55		Change the data with the PLAY and STOP buttons, and adjust the REC Y level (A) to the specified value.	Recording mode
3	D	55		Press the PAUSE button.	
4	D	54		Set the same data as address 55, and press the PAUSE button.	

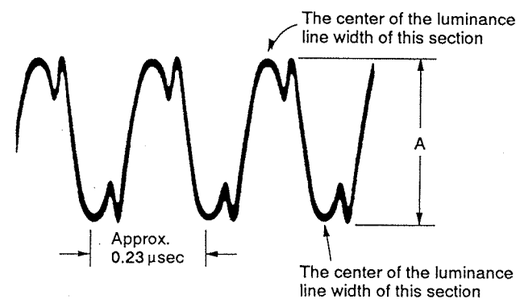

Fig. 9-18.

14. REC C level adjustment (VS-99 board)

Mode	Record (SP)
Signal	Color bar
Measurement Point	Pin ⑤ of IC302 (REC C RF)
Measuring Instrument	Oscilloscope
Adjustment Page	D
Adjustment Address	46 (REC C (REC))
Specified Value	A=115±10 mV

Note: Use a MP type tape

Adjusting method:

Order	Page	Address	Data	Procedure	Conditions
1	1	00	01	Releasing of protect.	
2	D	46		Change the data with the PLAY and STOP buttons, and adjust the amplitude (A) of the flat section of the "red" of the REC C level to the specified value.	Recording mode
3	D	46		Press the PAUSE button.	

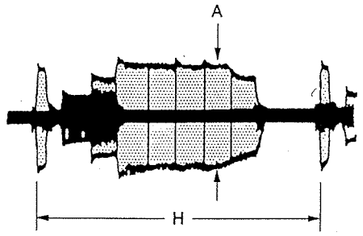

Fig. 9-19.

15. REC ATF level check (VS-99 board)

Mode	Record (SP)
Signal	No signal
Measurement Point	Pin ⑥ of CN002 (REC 2CH)
Measuring Instrument	Oscilloscope
Specified Value	A=8±2.0 mVp-p

Note: Use a MP type tape

Connection:
1) Remove CN505 of the AU-149 board.

Checking method:

Order	Page	Address	Data	Procedure	Conditions
1	1	00	01	Releasing of protect.	
2	D	55		Set the data to 00. (Minimizing the REC Y level) **Note:** Don't press the PAUSE button of the adjusting remote commander.	
3				Check that the REC ATF signal level (A) satisfies the specified value.	Recording mode
4				Turn the main power supply (7.5V) off	

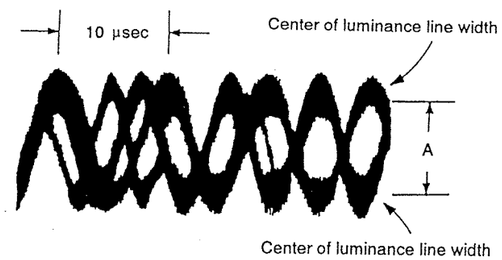

Fig. 9-20.

16. REC AFM level check (VS-99 board)

Mode	Record (SP)
Signal	No signal
Measurement Point	Pin ⑥ of CN002 (REC 2CH)
Measuring Instrument	Oscilloscope
Specified Value	A=9±2.0 mVp-p

Note : Use a MP type tape

Connection:

1) Connect Pin ⑨ of IC504 and GND with a 0.01 μF capacitor (1-101-004-00).

Checking method:

Order	Page	Address	Data	Procedure	Conditions
1	**1**	**00**	**01**	**Releasing of protect.**	
2	D	55		Set the data to 00. (Minimizing the REC Y level) **Note:** Don't press the PAUSE button of the adjusting remote commander.	
3				Check that the REC AFM signal level (A) satisfies the specified value.	Recording mode
4				Turn the main power supply (7.5V) off	

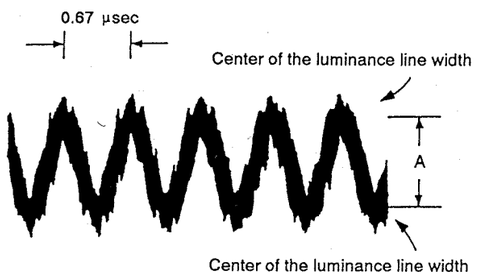

Fig. 9-21.

17. Chroma comb filter fine adjustment (VS-99 board)

Mode	Playback
Signal	Alignment tape: For checking operations Color bar section
Measurement Point	Video output terminal
Measuring Instrument	Vectorscope
Adjusting Element	RV161
Adjustment Page	D
Adjustment Address	4C (C COMB)
Specified Value	Minimum color luminance point movement when the "Edit" switch is turned on/off

Adjusting method:

Order	Page	Address	Data	Procedure	Conditions
1	**1**	**00**	**01**	**Releasing of protect.**	
2				Minimize the movements of the color luminance point when the edit is on/off with RV161.	Playback mode
3	D	4C		Change the data with the PLAY and STOP buttons, and minimize the movements of the color luminance point when the edit is on/off.	Playback mode
4	D	4C		Press the PAUSE button.	
5				Repeat steps 2 to 4.	

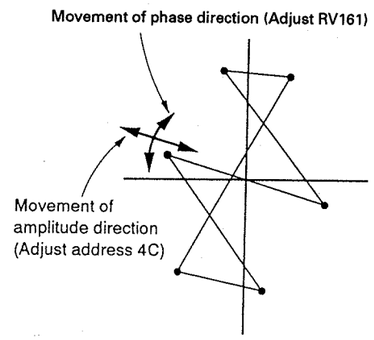

Fig. 9-22.

9-7. AUDIO SYSTEM ADJUSTMENT

- Adjust using the color bar signal as the video signal input.

[Connecting the measuring equipments for audio]
In addition to the measuring equipments for the video system, connect the measuring equipments for the audio system as shown in Fig. 9-23, and adjust with the power supply switch at "Player". Inputting signal and setting REC mode are described in section 9-1-3. Mode of HiFi sound select STEREO.
(How to setting: Refer to page 20, please changing the Mode Settings.)

Note: 1) When inputting the audio signal, input the same signal to both the L and R channels, unless specified otherwise.
2) Be sure to insert the plug (shorting plug or dummy plug, etc.,) into the audio output (or input/output) terminal (right). If the plug is not inserted, the monaural mode will be set, and correct adjustments cannot be carried out.
(Monaural mode)
During recording·····REC AFM RF 1.7 MHz carrier will not be output.
During playback ·····The L+R signal will be output from the audio output (or input/output) terminal (left).
3) Adjustments for channel R in adjustments for both channels L and R are in the [ ].

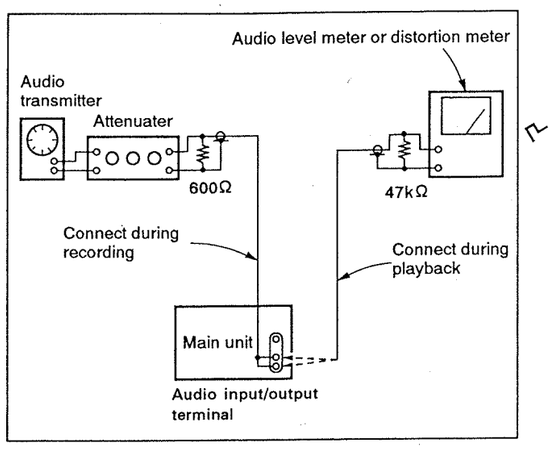

Fig. 9-23.

[Adjusting Procedure]
1) 1.5 MHz recording level check
2) E-E output level check
3) REC matrix L-R adjustment
4) REC matrix L+R check
5) 1.5 MHz deviation adjustment
6) 1.7 MHz deviation adjustment
7) Overall level characteristics, distortion rate check
8) Separation check
9) Overall noise level check

1. 1.5 MHz record level check (AU-149 board)

Mode	Record (Monaural)
Signal	No signal
Measurement Point	Pin ㉙ of CN802 (REC AFM RF)
Measuring Instrument	Oscilloscope
Specified Value	A=35±5 mV

Note: Do not insert the plug into the right audio output terminal.

Checking method:

Order	Procedure
1	Read the center of the luminance line width and note down the read level.

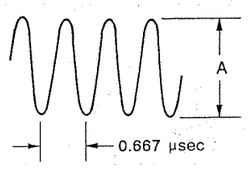

Fig. 9-24.

2. E-E output level check (AU-149 board)

Mode	Record
Signal	400 Hz, –7.5 dBs right audio input terminal [left][right]
Measurement Point	Pin ㊾ of IC801 [Pin ㊿ of IC801]
Measuring Instrument	Oscilloscope
Specified Value	925 $^{+240}_{-190}$ mVp-p (–7.5±2 dBs)

3. REC matrix L-R adjustment (AU-149 board)

Mode	Record
Signal	400 Hz, -7.5 dBs Input to both left and right terminals of the audio input termnial
Measurement Point	Pin ⑤ of IC801
Measuring Instrument	Oscilloscope (Use 1:1 probe)
Adjustment Page	D
Adjustment Address	78 (REC/PB MX (REC))
Specified Value	0±20 mVp-p

Adjusting method:

Order	Page	Address	Data	Procedure	Conditions
1	**1**	**00**	**01**	**Releasing of protect.**	
2	D	78		Change the data with the PLAY and STOP buttons, and minimize the 400 Hz signal level.	
3	D	78		Press the PAUSE button.	

4. REC matrix L+R check (AU-149 board)

Mode	Record
Signal	1. 400 Hz, –7.5 dBs : Audio input terminal (left) No signal: Audio input terminal (right) 2. No signal: Audio input terminal (left) 400 Hz, –7.5 dBs: Audio input terminal (right)
Measurement Point	Pin ㊹ of IC801
Measuring Instrument	Oscilloscope
Specified Value	The level difference when the signal is input to only the left terminal and when the signal is input to only the right terminal should be 0 ± 20 mVp-p.

Note: When measuring the signal level of Pin ㊹ of IC801, wait for more than 1 minute after signal input before measuring. (To regulate the AGC.)

Checking method:

Order	Page	Address	Data	Procedure	Conditions
1				Input the 400 Hz, –7.5 dBs signal only to the left audio input terminal. (Insert the shorting plug to the right audio input terminal.)	
2				Read the 400 Hz signal level of Pin ㊹ of IC801, and note it down. (Approximately 400 mVp-p)	Input signal to left channel only
3				Input the 400 Hz, –7.5 dBs signal only to the right audio input terminal. (Insert the shorting plug to the left audio input terminal.)	
4				Check that the 400 Hz signal level of Pin ㊹ of IC801 is (the value noted down at step 2) ±20 mVp-p.	Input signal to right channel only

5. 1.5 MHz deviation adjustment

Mode	Playback
Signal	Alignment tape: For checking operations (WR5-5CSP)
Measurement Point	Left or right audio output terminal
Measuring Instrument	Oscilloscope, level meter
Adjustment Page	D
Adjustment Address	7B (1.5 DEV)
Specified Value	–7.5 ± 0.5 dBs

Adjusting method:

Order	Page	Address	Data	Procedure	Conditions
1	**1**	**00**	**01**	**Releasing of protect.**	
2	D	7B		Change the data with the PLAY and STOP buttons, and adjust the 400 Hz signal level to the specified value.	WR5-5CSP playback mode
3	D	7B		Press the PAUSE button.	

6. 1.7 MHz deviation adjustment (AU-149 board)

Mode	Playback
Signal	Alignment tape: AFM stereo For checking operations (WR5-9CS) Bilingual (Monoscope) section
Measurement Point	1. Pin ㊾ of IC801
	2. Pin ㊿ of IC801
Measuring Instrument	Oscilloscope
Adjustment Page	D
Adjustment Address	7D (1.7 DEV)
Specified Value	8±0.05 graduation

Adjusting method:

Order	Page	Address	Data	Procedure	Conditions
1	**1**	**00**	**01**	**Releasing of protect.**	
2				Connect the oscilloscope to Pin ㊾ of IC801.	
3				Adjust the 400 Hz signal amplitude to the 8.0 scale using the VOLT/DIV knob of the oscilloscope.	WR5-9CS playback mode
4				Connect the oscilloscope to Pin ㊿ of IC801.	
5	D	7D		Change the data with the PLAY and STOP buttons, and adjust the amplitude of the 1 kHz signal to the 8 ± 0.05 graduation. (Adjust with the center of the luminance line width.)	WR5-9CS playback mode
6	D	7D		Press the PAUSE button.	

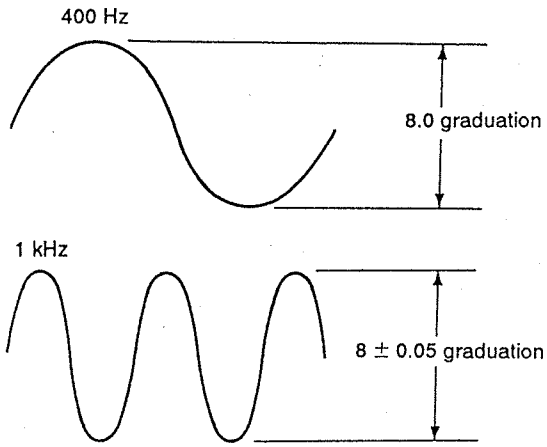

Fig. 9-25.

7. Overall level characteristics, distortion rate check

Mode	Self record/playback
Signal	400 Hz, –7.5 dBs: Left audio input terminal [right] No signal: Right audio input terminal [left]
Measurement Point	Left audio output terminal [right]
Measuring Instrument	Audio level meter and distortion meter
Specified Value	Level: −7.5 ± 2 dBs Distortion rate: Below 0.8% (Note 2)

Note: 1) The [ ] contains points to be measured when checking the right channel.
2) Value when the 200Hz to 6 kHz band pass filter is used.

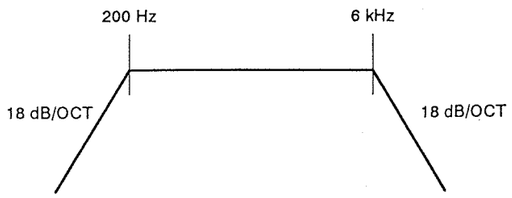

Fig. 9-26.

Checking method:

Order	Procedure
1	Input the 400 Hz, –7.5 dBs signal only to the left audio input terminal [right]. **Note:** Be sure to insert the shorting plug to the terminal of non-signal input.
2	Record the signal.
3	Remove the input signal, and playback the recorded section.
4	Check that the 400 Hz signal level of the left audio output terminal [right] is −7.5±2 dBs, and that the distortion rate is below 0.8% (Note 2)

8. Separation check

Mode	Self recording/playback
Signal	No signal: Left audio input terminal [right] 400 Hz, −7.5 dBs: Right audio input terminal [left]
Measurement Point	Left audio output terminal [right]
Measuring Instrument	Audio level meter (Use an IHF-A curve auditory correction filter)
Specified Value	Below –27.5 dBs

Note: The [ ] contains points to be measured when checking the right channel.

Checking method:

Order	Procedure
1	Insert a shorting plug into the left audio input terminal [right], and input a 1 kHz, –7.5 dBs signal only to the right audio input terminal [left].
2	Record the signal.
3	Remove the input signal.
4	Play back the recorded section.
5	Check that the cross talk level (1 kHz) of the left audio output terminal [right] is below –27.5 dBs.

9. Overall noise level check

Mode	Self record/playback
Signal	No signal: Left and right audio input terminals
Measurement Point	Left audio output terminal [right]
Measuring Instrument	Audio level meter (Use an IHF-A curve auditory correction filter)
Specified Value	Below −67.5 dBs

Note: The [ ] contains points to be measured when checking the right channel.

Checking method:

Order	Procedure
1	Insert the shorting plug to both the left and right audio input terminals.
2	Record.
3	Remove the shorting plug.
4	Play back the recorded section.
5	Check that the noise level of the left audio output terminal [right] is below −67.5 dBs.

9-8. ARRANGEMENT DIAGRAM FOR ADJUSTMENT PARTS

DD-55 BOARD (COMPONENT SIDE)

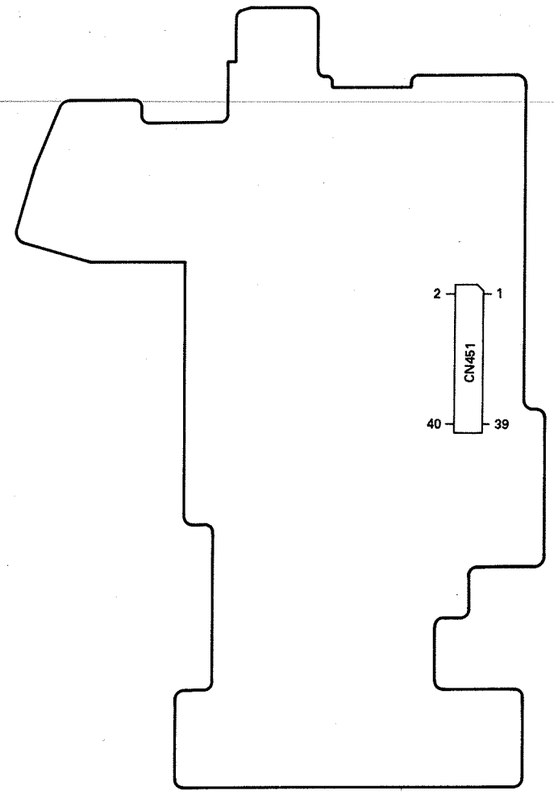

DD-55 BOARD (CONDUCTOR SIDE)

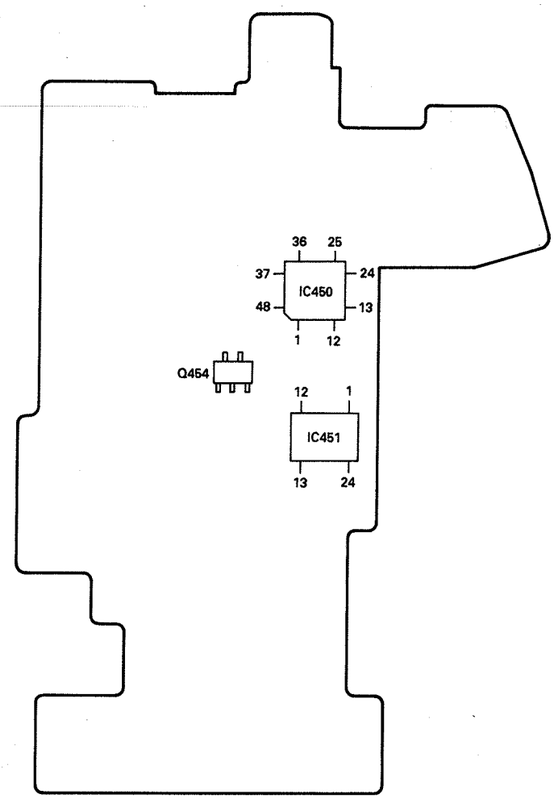

9-8. ARRANGEMENT DIAGRAM FOR ADJUSTMENT PARTS

DD-55 BOARD (COMPONENT SIDE)

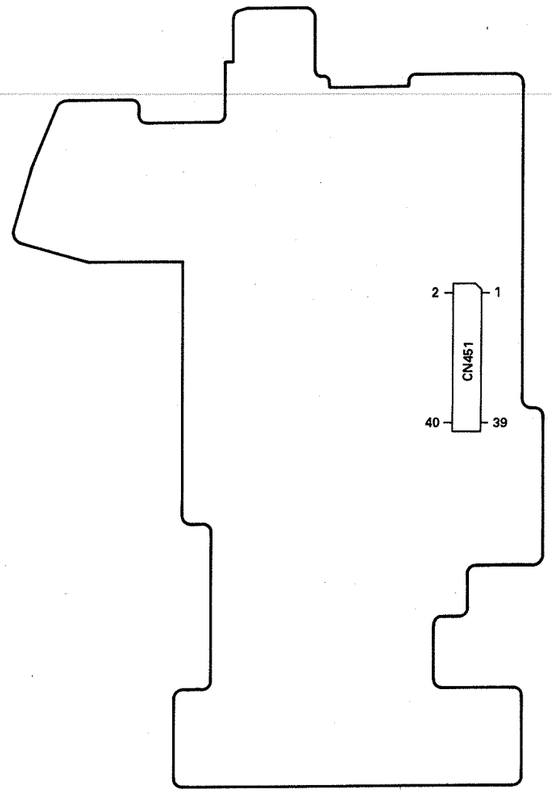

DD-55 BOARD (CONDUCTOR SIDE)

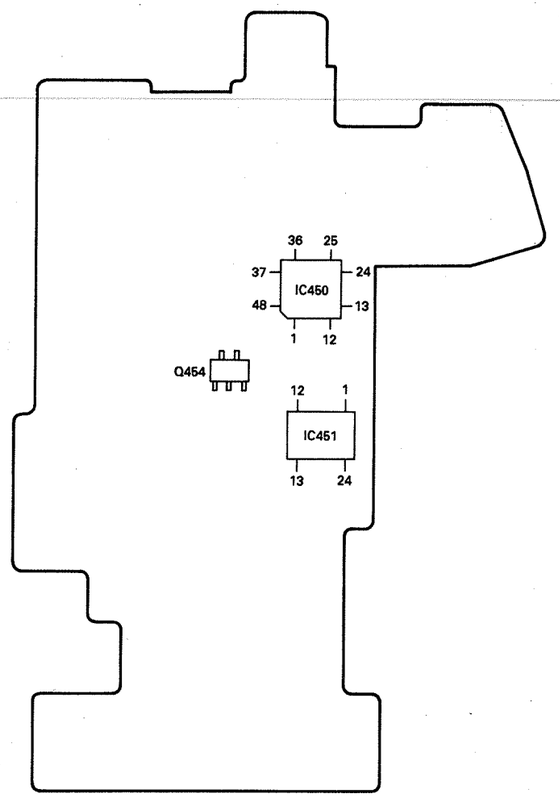

VS-99 BOARD (COMPONENT SIDE)

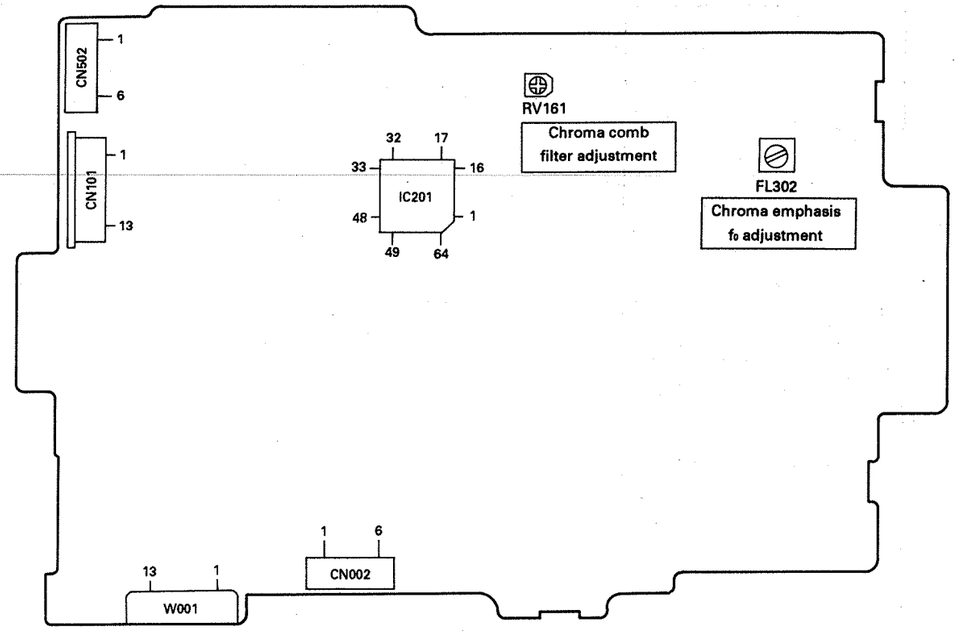

VS-99 BOARD (CONDUCTOR SIDE)

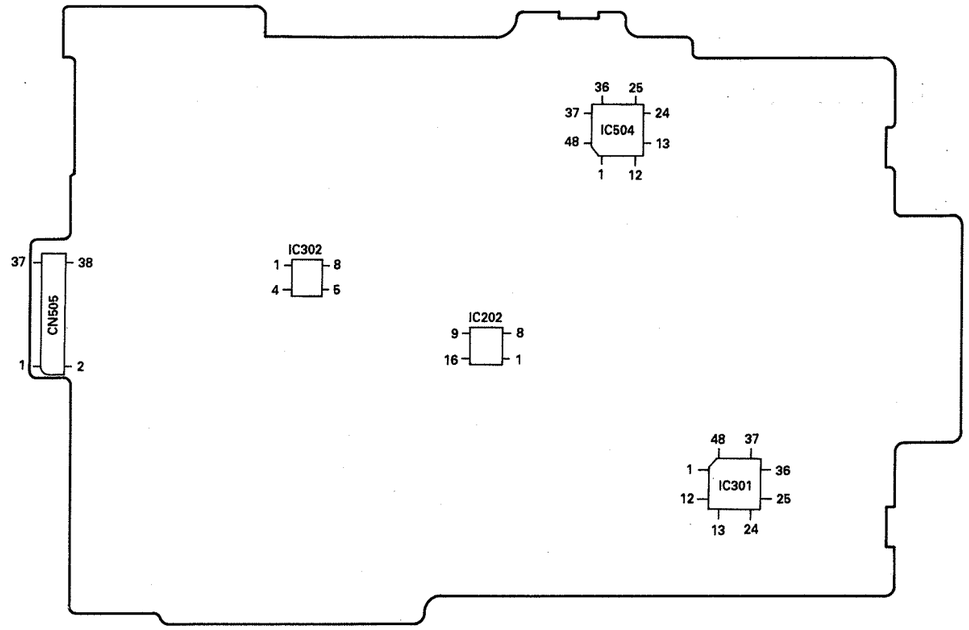

AU-149 BOARD (COMPONENT SIDE)

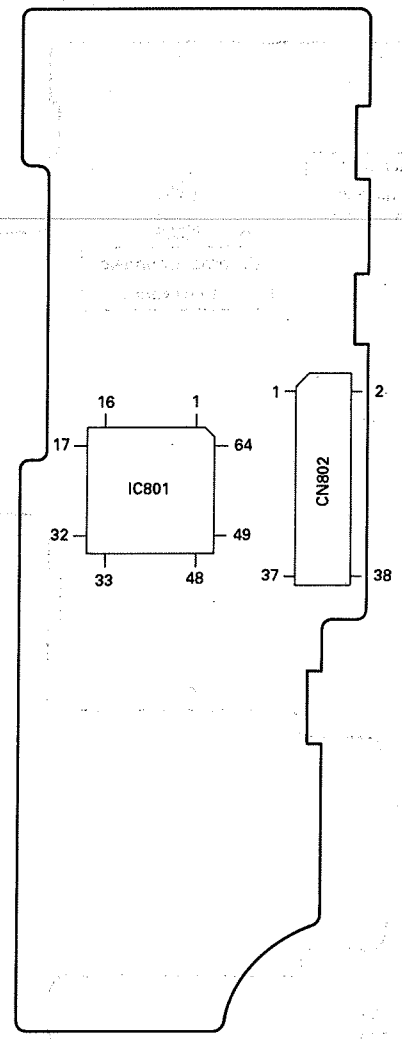

FOR CAMERA COLOR REPRODUTION ADJUSTMENT

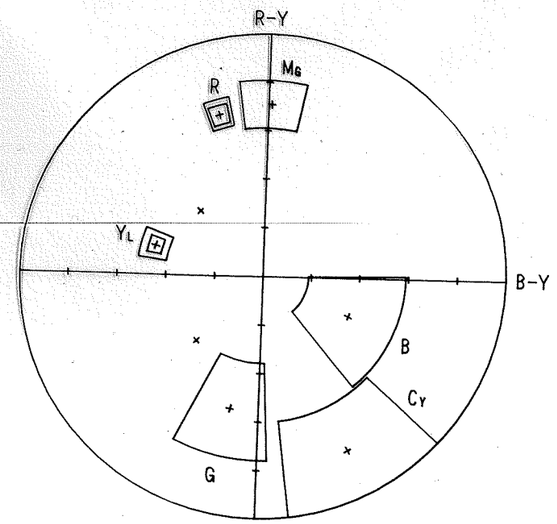

CCD-TR606E