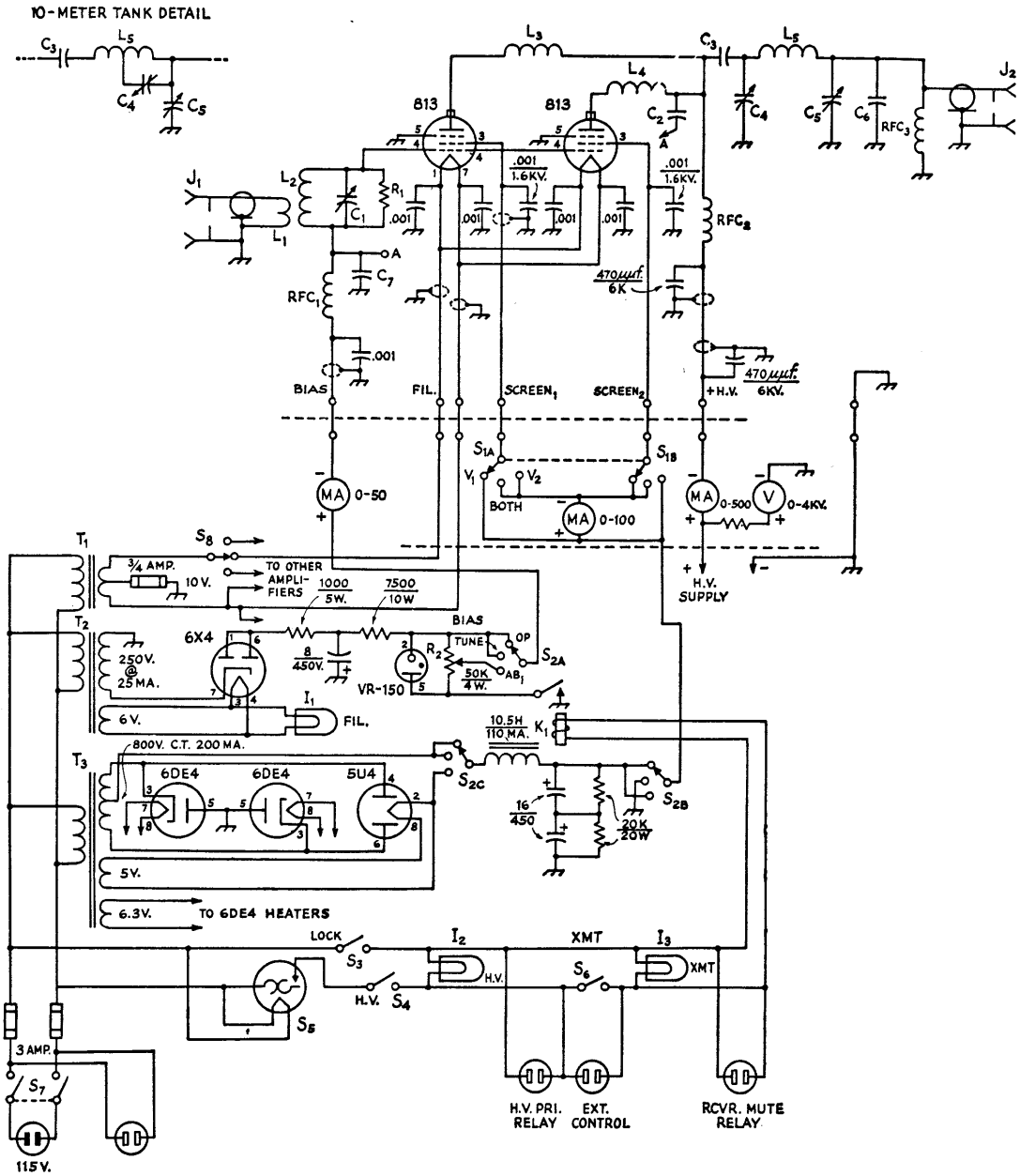

FIG. 2—Circuit diagram of a single parallel-813s amplifier and the control section. Diagram of each amplifier is similar, except as noted below. Unless specified otherwise, capacitances are in μf., capacitors marked with polarity are electrolytic, fixed capacitors are ceramic, resistances are in ohms.

C_2—Not used on 80 or 40 meters; see text.
C_3—Two 500-μμf. 20-kv. ceramic (Centralab TV-207) in parallel on 80 m.; single 500-μμf. 20-kv. ceramic on other bands.
C_7—0.001-μf. 1-kv. ceramic on 80 and 40 m.; 240-μμf. silver mica on other bands.
I_1—6-v. pilot lamp.
I_2, I_3—115-v. pilot lamp.
J_1, J_2—Coaxial cable receptacle.
K_1—S.p.d.t. relay, 115-v. a.c. coil.
L_3, L_4—Not required on 80 or 40 m.; 6 turns No. 14 on 1/4-inch diam.
R_1—10,000 ohms, 2 watts, composition.
R_2—50,000 ohms, 4 watts (Mallory M50MPK).
RFC_1—2.5-mh. 75-ma. r.f. choke.
RFC_2—See text.
RFC_3—2.5-mh. 300-ma. r.f. choke.
S_1—Two-pole 3-position rotary switch, shorting type.
S_2—Two-pole 3-position rotary switch, non-shorting type.
S_3—S.p.s.t. lock switch (AHH 81715-L).
S_4, S_6—S.p.s.t. toggle.
S_5—Time delay relay (Amperite 115N060).
S_7—Heavy duty d.p.s.t. toggle.
T_1—10-volt 10-ampere filament transformer.
T_2—250-volt 25-ma. transformer (Stancor PS-8416).
T_3—800-v.c.t. 200-ma., 5- and 6.3-v. heater windings.