NT TOOL CATALOG No.3

USA Ver.



NT USA CORPORATION

A Step Further Assurance for the Customers.

- NT TOOL's Risk Management -

NT TOOL has been working on dispersion of risk to prepare for every contingency – such as Natural disasters (earthquake, flooding, etc.) power shortage and such.

Dispersion of Production Bases

NT TOOL has two factories in Japan, and one in Thailand. These factories have equal production capacity and skill.



IIDA FACTORY



THAILAND OFFICE



HEAD OFFICE & FACTORY

Data Backup

Important data such as drawings are all backed up at four different locations (three locations in Japan and Thailand).

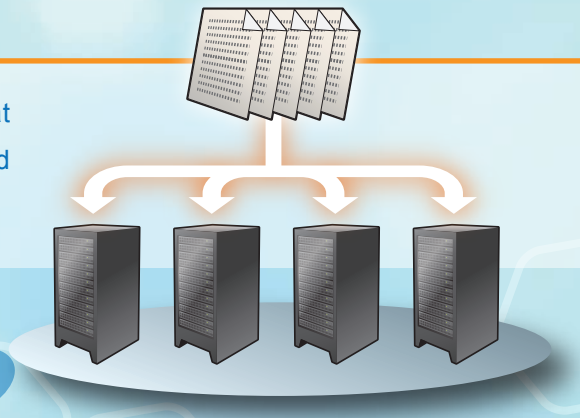





HEAD OFFICE



USA OFFICE



IIDA FACTORY

Expanding and connecting - NT Tool's global network -

In addition to our headquarter in the city of Takahama in Aichi, Japan, we have rolled out domestic bases in Tokyo, Osaka, Hiroshima, and Iida. Outside of Japan, we have established sales centers in the USA, Germany, China, Thailand, and Indonesia. We broadened our communication link to customers in over 30 countries around the world. We will continue to expand the NT Tool network to meet rising worldwide demand in the manufacturing industry.



THAILAND OFFICE / FACTORY



INDONESIA OFFICE / FACTORY

NT TOOL CORPORATION

USA OFFICE
318 Seaboard Lane Suite 301 Franklin TN, 37067 U.S.A.
Tel.1-615-771-1899 Fax.1-615-771-0121
www.nttoolusa.com E-mail: sales@nttoolusa.com

HEAD OFFICE
1-7-10, Yoshikawa-cho, Takahama-City, Aichi, 444-1386 Japan
Tel.81-(0)566-54-0101 Fax.81-(0)566-54-0111
www.nttool.com E-mail: osb@nttool.co.jp
TOKYO OFFICE
Tel.81-(0)3-3451-9141 Fax.81-(0)3-3451-9085
OSAKA OFFICE
Tel.81-(0)6-6308-1332 Fax.81-(0)6-6302-0653
HIROSHIMA OFFICE
Tel.81-(0)82-258-3810 Fax.81-(0)82-258-3811
IIDA FACTORY
Tel.81-(0)265-25-5200 Fax.81-(0)265-25-5225

EUROPE OFFICE
Tel.49-(0)6171-91639-0 Fax.49-(0)6171-91639-90

CHINA OFFICE
Tel.86-(0)21-6361-9540 Fax.86-(0)21-6360-7845

THAILAND OFFICE / FACTORY
222 Moo 1, Hi-tech Industrial Estate, Banpho, Bang Pa-in,
Ayuthaya 13160, Thailand
Tel.66-(0)3531-4180 Fax.66-(0)3531-4182
E-mail: nt_thai@ksc.th.com]

INDONESIA OFFICE / FACTORY
Jl. Mitra Raya II Blok E No.3, Kaw. Industri Mitrakarawang
Parungmulya, Ciampel, Karawang, Jawa Barat, 41361, Indonesia
Tel. 62-267-863-1711 Fax. 62-267-863-1712
E-mail: nt-indonesia@nttool.co.jp

Inch / Metric Conversion Table

Projection length reference / conversion table

Metric	inch
45	1.772
50	1.969
55	2.165
60	2.362
65	2.559
70	2.756
75	2.953
80	3.15
85	3.346
90	3.543
95	3.74
100	3.937
105	4.134
110	4.331
115	4.528
120	4.724
125	4.921
130	5.118
135	5.315
140	5.512
145	5.709
150	5.906
155	6.102
160	6.299
165	6.496
170	6.693
175	6.89
180	7.087
185	7.283
190	7.48
195	7.677
200	7.874

Metric	inch
205	8.071
210	8.268
215	8.465
220	8.661
225	8.858
230	9.055
235	9.252
240	9.449
245	9.646
250	9.843
255	10.039

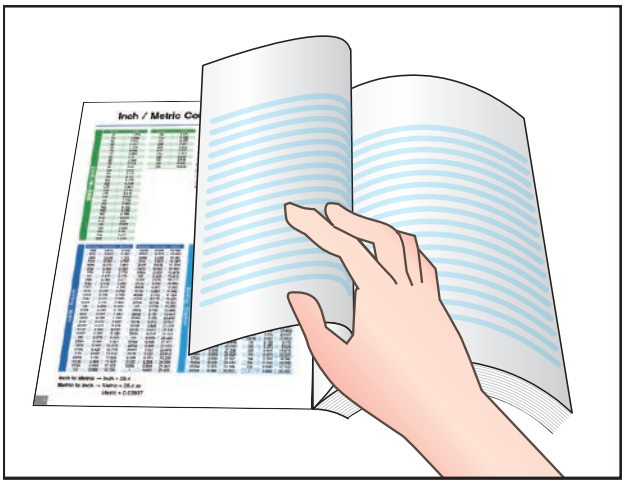

Please use these tables to convert metric ⇔ inch.

Sorted by Metric/Decimal

Fraction	Decimal	Metric	Fraction	Decimal	Metric
1/64	0.015	0.396	33/64	0.515	13.096
1/32	0.031	0.793	17/32	0.531	13.493
3/64	0.046	1.191	35/64	0.546	13.891
1/16	0.062	1.587	9/16	0.562	14.287
5/64	0.078	1.981	37/64	0.578	14.684
3/32	0.093	2.381	19/32	0.593	15.081
7/64	0.109	2.778	39/64	0.609	15.478
1/8	0.125	3.175	5/8	0.625	15.875
9/64	0.140	3.571	41/64	0.640	16.271
5/32	0.156	3.968	21/32	0.656	16.668
11/64	0.171	4.366	43/64	0.671	17.066
3/16	0.187	4.762	11/16	0.687	17.462
13/64	0.203	5.159	45/64	0.703	17.859
7/32	0.218	5.556	23/32	0.718	18.256
15/64	0.234	5.953	47/64	0.734	18.653
1/4	0.250	6.350	3/4	0.750	19.050
17/64	0.265	6.746	49/64	0.765	19.446
9/32	0.281	7.143	25/32	0.781	19.843
19/64	0.296	7.540	51/64	0.796	20.240
5/16	0.312	7.937	13/16	0.812	20.637
21/64	0.328	8.334	53/64	0.828	21.034
11/32	0.343	8.731	27/32	0.843	21.431
23/64	0.359	9.128	55/64	0.859	21.828
3/8	0.375	9.525	7/8	0.875	22.225
25/64	0.390	9.921	57/64	0.890	22.621
13/32	0.406	10.318	29/32	0.906	23.018
27/64	0.421	10.716	59/64	0.921	23.416
7/16	0.437	11.112	15/16	0.937	23.812
29/64	0.453	11.509	61/64	0.953	24.209
15/32	0.468	11.906	31/32	0.968	24.606
31/64	0.484	12.303	63/64	0.984	25.003
1/2	0.500	12.700	1	1.000	25.400

Sorted by Fraction group

Fraction	Decimal	Metric	Fraction	Decimal	Metric
1/64	0.015	0.396	1/32	0.031	0.793
3/64	0.046	1.191	3/32	0.093	2.381
5/64	0.078	1.981	5/32	0.156	3.968
7/64	0.109	2.778	7/32	0.218	5.556
9/64	0.140	3.571	9/32	0.281	7.143
11/64	0.171	4.366	11/32	0.343	8.731
13/64	0.203	5.159	13/32	0.406	10.318
15/64	0.234	5.953	15/32	0.468	11.906
17/64	0.265	6.746	17/32	0.531	13.493
19/64	0.296	7.540	19/32	0.593	15.081
21/64	0.328	8.334	21/32	0.656	16.668
23/64	0.359	9.128	23/32	0.718	18.256
25/64	0.390	9.921	25/32	0.781	19.843
27/64	0.421	10.716	27/32	0.843	21.431
29/64	0.453	11.509	29/32	0.906	23.018
31/64	0.484	12.303	31/32	0.968	24.606
33/64	0.515	13.096	1/16	0.062	1.587
35/64	0.546	13.891	3/16	0.187	4.762
37/64	0.578	14.684	5/16	0.312	7.937
39/64	0.609	15.478	7/16	0.437	11.112
41/64	0.640	16.271	9/16	0.562	14.287
43/64	0.671	17.066	11/16	0.687	17.462
45/64	0.703	17.859	13/16	0.812	20.637
47/64	0.734	18.653	15/16	0.937	23.812
49/64	0.765	19.446	1/8	0.125	3.175
51/64	0.796	20.240	3/8	0.375	9.525
53/64	0.828	21.034	5/8	0.625	15.875
55/64	0.859	21.828	7/8	0.875	22.225
57/64	0.890	22.621	1/4	0.250	6.350
59/64	0.921	23.416	3/4	0.750	19.050
61/64	0.953	24.209	1/2	0.500	12.700
63/64	0.984	25.003	1	1.000	25.400

Inch to Metric → Inch × 25.4

Metric to Inch → Metric ÷ 25.4 or
Metric × 0.03937

Safety Instructions

For your own safety

Thank you for using NT products. NT continues to make every effort to improve the quality and safety of our products. We recommend that you read the following instructions carefully before using the products shown in this catalog.



Indicates hazardous conditions that, if not faithfully followed, could result in a great danger. You are requested to read and follow"⚠" in our instruction manuals without fail to avoid personal injury or property damage.

Handling

- Care must be taken when handling or unpacking products as they may accidentally drop or slip out of the packaging.
- Care must be taken when carrying or transporting heavy holders. Where necessary, lifting equipment should be used.
- A tool holder must not be used as a taper guage to produce machine spindles.

Attaching and removing a cutting tool

- Tool holders must be firmly secured in clamping device when changing cutting tools.
- Do not touch cutting tools with unprotected hands. Gloves should be used for protection.
- Always use the recommended wrench or spanner when tightening a chuck. Never use a hammer or extension to increase tightening torque.

During machining operation

- Do not place hands near a rotating tool. This can result in a serious injury.
- Hot metal chips may be projected from the workpiece during machining. Machines should therefore be fully guarded and the operator should use protective equipment at all times.
- If set up is made with high pressure coolant in use, do not approach the cutting edge. The cutter may be ejected and cause personal injury.
- Holders and other tools should be used as intended and should not be modified or disassembled. This can cause accidental injury.

Care of products

- Tools should be removed from the chucks when not in use for long periods of time. Failure to do so may result in reduced clamping force. After long periods in storage the cap/clamping ring should always be loosened and re-tightened before starting machining operation.
- All holders should be thoroughly cleaned and protected with rust proof oil before being placed in storage. Care should be taken to avoid damaging the contact surface of the taper.

These are general safety warnings and each product has specific safety instructions which should be followed before use. Please contact NT if you have any questions.

Table Of Contents

PHC·A Power Hydro Chuck



Feature····· 026
BT····· 104
CAT····· 208
AHO····· 258
HSK·A····· 314
HSK·E····· 361
HSK·F····· 368
UTS····· 400

PHC·S Slim Hydro Chuck



New

Feature····· 028
BT····· 112
CAT····· 214
AHO····· 260
HSK·A····· 318
UTS····· 402

CT·S CT·S-E Super Tite-Lock Milling Chuck / Super Tite-Lock Milling Chuck (High-Balanced Type)



Feature····· 034

CT·S
BT····· 050
CAT····· 192
AHO····· 248
HSK·A····· 290
UTS····· 384
NT····· 058

CT·S-E
(High Balanced Type)
BT····· 054
CAT····· 194
HSK·A····· 292

CT·S-CF Super Tite-Lock Milling Chuck (Flange Through Type)



Feature····· 034
BT····· 056

CT·A CT·A-CF Super Tite-Lock Milling Chuck



CT·A
BT····· 060
HSK·A····· 294
UTS····· 388
NT····· 064

CT·A-CF
BT····· 062

HDC·A HDC·A-CF High-Precision Collet Holder / High-Precision Collet Holder (Flange Through Type)



HDC·A
Feature····· 035
BT····· 070
CAT····· 196
AHO····· 250
HSK·A····· 296
HSK·E····· 358
HSK·F····· 366
UTS····· 390
ST····· 081

HDC·A-CF
Feature····· 035
BT····· 072

SDM Drill Holder With Easy Tool Length Adjustment



Feature····· 036
BT····· 074
CAT····· 198
AHO····· 252
HSK·A····· 298
UTS····· 392

ERC ERC-T Collet Holder for Small Diameter / Collet Holder For Small Diameters (Taper Type)



ERC
BT····· 078
CAT····· 202
HSK·A····· 302
HSK·E····· 360
HSK·F····· 367
UTS····· 394
ST····· 084

ERC-T
BT····· 080
HSK·A····· 304
UTS····· 395

GDC·A High-Precision Collet Holder (High-Balanced Type)



Feature····· 035
BT····· 076
CAT····· 200
HSK·A····· 300

CTZ "R"Zero Holder for Large Diamater



Feature····· 032
BT····· 098
CAT····· 206
AHO····· 256
HSK·A····· 308
UTS····· 398

HDZ "R"Zero Holder



Feature····· 033
BT····· 096
CAT····· 204
AHO····· 254
HSK·A····· 306
UTS····· 396
ST····· 082

GDZ "R"Zero Holder (High-Balanced Type)



Feature····· 033
BT····· 100
HSK·A····· 309

ERZ "R"Zero Holder For Small Diameters



Feature····· 033
BT····· 102
HSK·A····· 311
UTS····· 399

PHZ·S Slim Hydro "R" Zero Holder



New

Feature····· 033
BT····· 103
CAT····· 207
HSK·A····· 312

STM Synchronous Tap Holder With Easy Tool Length Adjustment



Feature····· 037
BT····· 124
CAT····· 222
AHO····· 266
HSK·A····· 332
UTS····· 410

TP0 Synchro Tapping Chuck

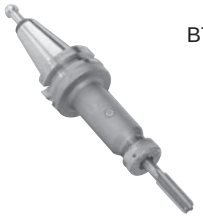

BT····· 130

STP Synchro Tapping Chuck



BT····· 133

TP1 Quick Change Tapping Chuck



BT····· 135
CAT····· 227
HSK·A····· 339

TP3B Quick Change Tapping Chuck (Auto Depth Control)



BT····· 136

BT30-SBV SBH, TSB Turning Tools for brother's SPEEDIO M140X1



Feature····· 042
SBV····· 181
SBH····· 182
TSB····· 183

New

HSK·T HSK·T Turning Tools



Feature····· 043
SBV····· 375
SBN····· 376
SBH····· 377
SBT····· 378
TSB····· 379
TSD····· 381

AHS, AHL Angle Heads (Flexible Type) 0-90°



Feature····· 038
AHS, AHL
BT····· 168

AHSE AHLE Angle Heads (Flexible Type) 0-90°



AHSE, AHLE
CAT····· 240
HSK·A····· 357

AH**90 AHE**90 Angle Heads (Fixed Type) 90°



Feature····· 038
AH90
BT····· 164
AHO····· 284

AHE90
CAT····· 238
HSK·A····· 355

AH**45 Angle Heads (Fixed Type) 45°



Feature····· 038
AH45
BT····· 166
AHO····· 286

HP-H Hyper Spindle (Speed Increaser)



Feature····· 039
BT····· 163
CAT····· 237

***-CS Coolant Holder



HDC·A-CS
BT····· 170
CAT····· 242
CT·S-CS
BT····· 171
CAT····· 243
CT·A-CS
BT····· 172
HC-CS
BT····· 173
TP-CS
BT····· 174
MT-CS
BT····· 176
SL-CS
BT····· 177

KHE/BT BT Shank For Stub Holder



BT····· 160

KLD Keyless Drill Chuck



BT····· 162
CAT····· 236
HSK·A····· 354

SRE Shrink Fit (Small Diameter Type)



Feature····· 040
BT····· 114
CAT····· 216
HSK·A····· 322
HSK·E ····· 362
UTS····· 404

SRD Shrink Fit (DIN Standard)



Feature····· 040
BT····· 118
CAT····· 218
AHO ····· 262
HSK·A····· 326
HSK·E ····· 363

SRK Shrink Fit (Heavy Type)



Feature····· 040
BT····· 122
HSK·A····· 325
UTS····· 406

SRS Shrink Fit (Slim Type)



Feature····· 040
BT····· 120
CAT····· 220
AHO ····· 264
HSK·A····· 330
HSK·E ····· 364
UTS····· 407

JTA Jacobs Taper Arbor



BT····· 156
CAT····· 234

SCA Side Cutter Arbor



BT····· 154
CAT····· 232
AHO ····· 282
HSK·A····· 350

SM1, SMA SMB, SMC Shell End Mill Arbor



SM1
BT····· 149
SMA
BT····· 150
SMB
BT····· 152
SMC
BT····· 153

FMH, FMA FMB, FMC Face Mill Arbor



FMH
BT····· 143
AHO ····· 274
HSK·A····· 345
UTS····· 416
FMA
BT····· 145
CAT····· 231
AHO ····· 276
HSK·A····· 347
UTS····· 418
FMB
BT····· 146
AHO ····· 278
HSK·A····· 348
FMC
BT····· 148
AHO ····· 280
HSK·A····· 349

MTA MTB Morse Taper Holder



MTA
BT····· 157
CAT····· 235
AHO ····· 272
HSK·A····· 351
MTA
BT····· 158

SLA, SL2, SLB Side Lock Holder



SLA
BT····· 141
HSK·A····· 342
SL2
BT····· 140
CAT····· 230
AHO ····· 273
HSK·A····· 343
SLB
BT····· 142

PSB — Retention Stub



PSB(BT) ····· 184
PSB(AHO) ·· 288

Collet



FDC ····· 086
FDC-OH ···· 087
FDC-C ····· 088
FDC-MS ···· 089
EDC ····· 444
ER ····· 090
EMS ····· 480
FSC ····· 128
New FSC-MS ···· 129

Shank Dimension

BT ····· 187
NT ····· 188
JBS ····· 189
HSK ····· 372

KH-E — Q.C Stub Holder



KH-E ····· 421

KH-EC — Q.C Stub Holder with Oil Hole



KH-EC1 ···· 424
KH-EC2 ···· 425

KH-A, KH KH-A-NL — Q.C Stub Holder



KH-A ····· 428
KH ····· 431
KH-A-NL ··· 430

KD, KD-T KD-NL — Q.C Stub Holder



KD ····· 434
KD-NL ···· 436
KD-T ····· 437

KTP, KTL KTLP — Q.C Stub Tapper



KTP ····· 451
KTL ····· 452
KTLP ····· 453

WE, WES·B WEN, WESN·B — Q.C Tap Adapter



WE ····· 458
WES·B ···· 459
WEN ····· 460
WESN·B ···· 461

Adjustable Adapter



D ····· 468
F ····· 470
H ····· 472
M ····· 472
N ····· 473
T ····· 474

EM·A — Endmill Chuck



EM·A ····· 478

DC*, ED* — Straight Drill Chuck



DC ····· 482
DC-T,N ···· 483
ED·A ····· 485
ED ····· 487

FH-** — Floating Holder



FH-Tr ····· 491
FH-MT····· 492
FH-ST ····· 493
New FH-ST-HDC·A··· 495

ISG3400 Shrink Fit System



Feature ····· 040
ISG3400 ···· 500

New

SRK-HA1 SRK-HB2 Economy Type Heater



Feature ····· 040
SRK-HA1 ···· 504
SRK-HB2 ···· 504

ZM-1 ZM-2 Zero Master 3D Master



ZM-1 ····· 506
ZM-2 ····· 506

AOTP Contactless Optical Tool Presetter



Feature ····· 044
AOTP ····· 510

New

OTP Contactless Tool Presetter



Feature ····· 046
OTP-400 ····· 507
OTP-600 ····· 507

NTP Tool Presetter



Feature ····· 046
NTP-400 ····· 514
NTP-300A ···· 514

SPN1-HSK HCL HSK Clamper



Feature ····· 047
SPN1-HSK ···· 516
HCL ····· 517

SPZ-2 "R" Zero Setter



Feature ····· 047
SPZ-2 ····· 518

SPHV-3 Simple Setter



Feature ····· 047
SPHV-3 ····· 519

SP* Simple Setter (Presetting gauge)



SPN2-SRK-PS1 ··· 505
SPN ····· 522
SPK-K ····· 526
SPK-KHA ··· 529
SPW ····· 532
SPK-STC ···· 535
SPT ····· 538

BUSHING



A ····· 544
B ····· 546
C ····· 548
D ····· 550
E ····· 552
F ····· 554
G ····· 556

FM Chamfering Cutter



FM ····· 561

BM Back Chamfering Cutter



BM ····· 562

BZ Back Spot-facing Cutter



BZ ····· 563

Gold Chamfering Drill



····· 567

Chamfering Drill



····· 565

NEW Chamfering Drill



····· 568

Chamfering Holder



····· 569

MEMO

Alphabetic Index

SHANK INDEX

BT Series	49 ~ 190
CAT Series	191 ~ 245
AHO Series	247 ~ 288
HSK・A Series	289 ~ 357
HSK・E Series	358 ~ 365
HSK・F Series	366 ~ 369
HSK・T Series	374 ~ 381
UTS Series	383 ~ 418

A

A	Bushing	544
ADS	Adapter	517
AH, AH-OH (45°)	Angle Heads (Fixed Type)	166
AH, AH-OH (90°)	Angle Heads (Fixed Type)	164
AHE (90°)	Angle Heads (Fixed Type)	238
AHS, AHL	Angle Heads (Flexible Type)	168
AHSL, AHSE	Angle Heads (Flexible Type)	240
AOTP	Contactless Optical Tool Presetter	510
AOTP-DUST-C	Cleaning paste	511
AOTP-PRINT-KG	Label printer for AOTP	511
AOTP-PRINT-LA	Label roll for AOTP-PRINT-KG	511

B

B	Bushing	546
BL	Stopper Bolt	68
BM	Back Chamfering Cutter	562
BR	Bushing	546
BT*-**	Hex. Bit Socket	498
BZ	Back Spot-facing Cutter	563

C

C	Bushing	548
C	Chamfering Holder	569
CL**N-**D	Torque Wrench	499
CMT	Morse Taper Sleeve	176
CP-NBT**OH	Coolant Pipe	288
CR	Bushing	548
CS	Seal Unit	178
CSL	Sleeve for Side Lock	177
CT・A	Milling Chuck	60
CT・A-CF	Milling Chuck Flange Through Type	62
CT・A-CS	CT・A Coolant Inducer	172
CT・S	Milling Chuck	50
CT・S-CF	Milling Chuck Flange Through Type	56
CT・S-CS	CT・S Coolant Inducer	171
CT・S-E	High Balanced Milling Chuck	54
CTPS	Preset Driver	174
CTZ	R Zero Holder for Large Diamater	98

D

D	Bushing	550
D	Adjustable Adapter	468
DC	Straight Drill Chuck	482
DCS	Preset Driver	484
DR	Bushing	550
DS	Dust Seal	448

E

E	Bushing	552
ED	Straight Drill Chuck For Small Diameters	487
ED・A	Straight Drill Chuck	485
EDC	Collet	444
EM・A	Endmill Chuck	478
EMC	Collet	480
EMP・A	Nut	479
EMS	Collet	480
ER	Bushing	552
ER8	Collet for Samll Diamater	90
ERC	Collet Holder for Samll Diamater	78
ERC-T	Collet Holder for Samll Diamater Taper Type	80
ERZ	R Zero Holder for Samll Diamater	102

ESC	Collet for Tap	131

F

FKS03	FKS 3400 Tool Holders	502
FKS3400	FKS Liquid Cooler	502
F	Bushing	554
F	Adjustable Adapter	470
FDC	Collet	86
FDC-C	Coolant Collet	88
FDC-MS	Semidry Collet	89
FDC-OH	Coolant Collet	87
FH-**	Floating Holder	490
FHS	Sleeve	494
FK	Spanner	76
FM	Chamfering Cutter	561
FMA	Face Mill Arbor	145
FMB	Face Mill Arbor	146
FMC	Face Mill Arbor	148
FMH	Face Mill Arbor	143
FR	Bushing	554
FSC-C	Collet For Tap (For Collet through)	128
FSC-MS	High-Precision Collet for Tapper (For Semidry Machining/MQL)	129
FSC-OH	Collet For Tapper (For tool with coolant hole)	128

G

G	Bushing	556
G**	Gold Chamfering Drill	567
GDC・A	High Balanced Collet Holder	76
GDP	Nut	95
GDZ	High Balanced R Zero Holder	100

H

H	Adjustable Adapter	472
HC-CS	Hydraulic Chuck Coolant Inducer	173
HCL	HSK Clamper	517
HDC・A	Collet Holder	70
HDC・A-CF	Collet Holder Flange Through Type	72
HDC・A-CS	HDC・A Coolant Inducer	170
HDMC-G	Coolant Pin Wrench	426
HDP	Nut	93
HDS	Preset Screw	94
HDZ	R Zero Holder	96
HP-H	Hyper Spindle	163
HS	Spanner	50
HSK-BL	Stopper Bolt	295
HTP	Cap	127

I

IGB-*	Positioning Block	179 ~ 180
ISG3400	Shrink Fit System	500
ISGS309	Clamping Ring	500
ISGS3200	Induction Coil	500
ISGS3201	Pole Disc One-Piece	500
ISGS3201GT	Pole Disc Two-Piece	501

J

JA	Jacobs Adapter	69
JAB	Jacobs Adapter	69
JTA	Jacobs Taper Arbor	156

K

KD	Stub Holder	434
KDA	Finger Collet	438
KDB	Stub Holder Body	435
KD-NL	Stub Tapper	436
KDP	Nut	445
KDS	Preset Driver	438
KD-T	Stub Holder	437
KH	Stub Holder	431
KH-A	Stub Holder	428
KH-A-NL	Stub Tapper	430
KHB	Stub Holder Body	432

KHB-A	Stub Holder Body	429
KHB-E	Stub Holder Body	423
KH-E	Stub Holder	421
KHE/BT	BT Shank for Stub Holder	160
KH-EC	Coolant Stub Holder	424
KH-EC-P	Coolant pin	426
KHS	Preset Driver	433
KLD	Keyless Drill Chuck	162
KTL	Stub Tapper	452
KTLP	Stub Tapper	453
KTP	Stub Tapper	451

L

LT	Wrench（Chamfering）	561

M

M	Adjustable Adapter	472
MA	MorseTaper Adapter	68
MAB	MorseTaper Adapter	68
MC	Straight Collet	66
MCA	Straight Collet	67
MC-C	Straight Collet	67
MC-OH	Straight Collet	66
MN5523・J	MN Flange	370
MS	Master Bar (for Angle Head)	169
MS	Master Arbor (HSK･A)	352
MTA	MorseTaper Holder	157
MTB	MorseTaper Holder	158
MT-CS	Coolant Inducer	176

N

N	Adjustable Adapter	473
NTP	Tool Presetter	514

O

OTP	Contactless Tool Presetter	507

P

PBK	Base for Presetter	526
PBN	Base for Presetter	525
PBT	Base for Presetter	534
PG	Gauge	523
PHC・A	Hydro Chuck	104
PHC・S	Slim Hydro Chuck	112
PH-HSK	Holder Support	516
PH-K	Holder Support	527
PH-NT	Holder Support	524
PH-STC	Holder Support	536
PH-Tr	Holder Support	539
PH-WE	Holder Support	533
PHZ・S	Slim Hydro "R" Zero Holder	102
PK-KHA	Holder Support	530
PS	Gauge Stand	523
PSB	Retention Stud	184
PSB-AHO	Retention Stud for AHO	288
PS-H4	Gauge stand for height gauge	523

Q

QLN-ML**	Torque Wrench	498

S

S	Spanner	95
SA	Bushing	544
SB	Bushing	546
SBH	Turning Tools for brother's SPEEDIO M140X1	182
SBH	HSK・T Turning Tool	377
SBN	HSK・T Turning Tool	376
SBT	HSK・T Turning Tool	378
SBV	Turning Tools for brother's SPEEDIO M140X1	181
SBV	HSK・T Turning Tool	375
SC	Bushing	548
SCA	Side Cutter Arbor	154
SD	Bushing	550
SDM	Drill Holder Easy Tool Length Adjustment	74
SE	Bushing	552

SF	Bushing	554
SH	Spanner Head	499
SL2	Side Lock Holder	140
SLA	Side Lock Holder	141
SLB	Side Lock Holder	142
SL-CS	Coolant Inducer	177
SM1	Shell Endmill Arbor	149
SMA	Shell Endmill Arbor	150
SMB	Shell Endmill Arbor	152
SMC	Shell Endmill Arbor	153
SPHV-3	Simple Setter	519
SPK-K	Simple Setter	526
SPK-KHA	Simple Setter	529
SPK-STC	Simple Setter	535
SPN	Simple Setter	522
SPN1-HSK	HSK Clamper	516
SPN2-SRK*-B*	Presetting Bush	505
SPN2-SRK-PR	Presetting Ring	505
SPN2-SRK-PS1	Presetting gauge	505
SPT	Simple Setter	538
SPW	Simple Setter	532
SPZ-2	R Zero Setter	518
SRD	Shrink Fit	116
SRE	Shrink Fit	114
SRK	Shrink Fit	122
SRK-HA1	Economy Type Heater	504
SRK-HA-HE	Economy Type Heater Hot Air Distributor (Heating Head)	504
SRK-HB2	Economy Type Heater	504
SRK-SP	Holder Support	504
SRS	Shrink Fit	120
STC	Synchro-Tap Adapter	133
STM	Synchuronous Tap Holder	124
STP	Tapping Chuck	133
STS	Preset Driver	126
STS-R	Tool for Changing Driver	126

T

T3-W	Tool Holder Air Cooled	501
T3-Z/WZ	Cooling Plate	501
T	Adjustable Adapter	474
T	Lock Screw	557
TP0	Tapping Chuck	130
TP1	Tapping Chuck	135
TP3B	Tapping Chuck	136
TPC	Tapping Chuck	169
TP-CS	Coolant Inducer	174
TPS	Preset Driver	131
TSB	Turning Tools for brother's SPEEDIO M140X1	183
TSB	HSK・T Turning Tools	379
TSD	HSK・T Turning Tools	381
TSS	Sleeve for TSB40	380

V

VA662-10	Protective Gloves	500

W

WE	Tap Adapter	458
WEN	Tap Adapter	460
WES・B	Tap Adapter	459
WESN・B	Tap Adapter	461

Z

ZM-1	Zero Master	506
ZM-2	3D Master	506
ZM-P	Probe	506

Number

Ex.：04-ST	Chamfering Drill	565
Ex.：07-ST	NEW Chamfering Drill	568
Ex.：09-MT	Chamfering Drill	566
Ex.：15-MT	NEW Chamfering Drill	568

Index by Product Category

Holder Selection Guide

Holder Selection Guide 20

product introduction

Introduction 24
Rustproof Tool Holder 25
Power Hydro Chuck PHC・A 26
Slim Hydro Chuck PHC・S 28
Slim Hydro "R" Zero Holder PHZ・S 30
R Zero Holder for Large Diameter CTZ 32
Super Tite-lock Milling Chuck CT・S 34
ColletHolder 35
Drill Holder With Easy Tool Length Adjustment SDM 36
Synchronous Tap Holder With Easy Tool Length Adjustment STM 37
Angle Head 38
Hyper Spindle HP-H 39
Shrink Fit System 40
WBT / NBT AHO Series 41
Turning Tools for SPEEDIO M140X1 42
HSK・T Turning Tools 43
Contactless Optical Tool Presetter AOTP 44
Contactless Tool Presetter OTP 46

BT Series

Milling Chuck

CT・S 50
CT・S-CF 56
CT・S-E 54
NT-CT・S 58
CT・A 60
CT・A-CF 62
NT-CT・A 64
Accessories 66

Collet Holder

HDC・A 70
HDC・A-CF 72
SDM 74
GDC・A 76
ERC 77
ERC-T 80
ST-HDC・A 81
ST-HDZ 82
ST-ERC 84
Accessories 86

R Zero Holder

HDZ 96
CTZ 98
GDZ 100
ERZ 102
PHZ・S 103

Hydraulic Chuck

PHC・A 104
Accessories 106
PHC・S 112

Shrink Fit

SRE 114
SRD 116
SRS 120
SRK 122

Tapping Chuck

STM 124
Accessories 126
TP0 130
STP 133
TP1 135
TP3B 136

Arbors

SLH 138
SL2 140
SLA 141
SLB 142
FMH 143
FMA 145
FMB 146
FMC 148
SM1 149
SMA 150
SMB 152
SMC 153
SCA 154
JTA 156
MTA 157
MTB 158

BT Shank for Stub Holder

KHE/BT 160

Keyless Drill Chuck

KLD 162

Hyper Spindle

HP-H 163

Angle Head

AHS, AHL 168
AH, AH-OH 90° 164
AH, AH-OH 45° 166
Accessories 169

Coolant Inducer

HDC·A-CS 170
CT·S-CS 171
CT·A-CS 172
HC-CS 173
TP-CS 174
MT-CS 176
SL-CS 177
Accessories 178

Turning Tools for brother's SPEEDIO M140X1

SBV 181
SBH 182
TSB 183

Retention Stub

PSB 184

Tool Shank Dimensions

..... 187

CAT Series

Milling Chuck

CT・S 192
CT・S-E 194

Collet Holder

HDC・A 196
SDM 198
GDC・A 200
ERC 202

R Zero Holder

HDZ 204
CTZ 206
PHZ・S 207

Hydraulic Chuck

PHC・A 208
Accessories 212
PHC・S 214

Shrink Fit

SRE 216
SRD 218
SRS 220

Tapping Chuck

STM 222
FSC 226
TP1 227
STP 228

Arbors

SLH 229
SL2 230
FMA 231
SCA 232
JTA 234
MTA 235

Keyless Drill Chuck

KLD 236

Hyper Spindle

HP-H 237

Angle Head

AHE 238
AHSE, AHLE 240

Coolant Inducer

HDC・A-CS 242
CT・S-CS 243

Retention Stub

PSC 244

Tool Shank Dimensions

..... 245

AHO Series

Milling Chuck

CT・S 248

Collet Holder

HDC・A 250
SDM 252

R Zero Holder

HDZ 254
CTZ 256

Hydraulic Chuck

PHC・A 258
PHC・S 260

INDEX

Shrink Fit
SRD 262
SRS 264
Tapping Chuck
STM 266
FSC 270
Arbors
MTA 272
SL2 273
FMH 274
FMA 276
FMB 278
FMC 280
SCA 282
Angle Head
AH, AH-OH 90° 284
AH, AH-OH 45° 286
Coolant Accessories
PSB, CP 288

HSK・A Series
Milling Chuck
CT・S 290
CT・S-E 292
CT・A 294
Collet Holder
HDC・A 296
SDM 298
GDC・A 300
ERC 302
ERC-T 304
R Zero Holder
HDZ 306
CTZ 308
GDZ 309
ERZ 311
PHZ・S 312
Hydraulic Chuck
PHC・A 314
PHC・S 318
Shrink Fit
SRE 322
SRK 325
SRD 326
SRS 330
Tapping Chuck
STM 332
FSC 336
STP 337
TP1 339
Arbors
SLH 340
SLA 342
SL2 343
FMH 345
FMA 347
FMB 348
FMC 349
SCA 350
MTA 351
MS 352
Keyless Drill Chuck
KLD 354
Angle Head
AHE 355
AHSE,AHLE 357

HSK・E Series
Collet Holder
HDC・A 358
ERC 360
Hydraulic Chuck
PHC・A 361
Shrink Fit
SRE 362
SRD 363
SRS 364

HSK・F Series
Collet Holder
HDC・A 366
ERC 367
Hydraulic Chuck
PHC・A 368

HSK・C Series
MN5523・J 370

HSK Shank 372

HSK・T Series

SBV 375
SBN 376
SBH 377
SBT 378
TSB 379
TSD 381

UTS Series

Milling Chuck

CT・S 384
CT・S-E 386
CT・A 388

Collet Holder

HDC・A 390
SDM 392
ERC 394
ERC-T 395

R Zero Holder

HDZ 396
CTZ 398
ERZ 399

Hydraulic Chuck

PHC・A 400
PHC・S 402

Shrink Fit

SRE 404
SRK 406
SRS 407

Tapping Chuck

STM 410
FSC 414

Arbors

FMH 416
FMA 418

SPECIALIZED MACHINE SERIES TOOLING SYSTEM

Stub Holder

KH-E 421
KHB-E 423
KH-EC1 424
KH-EC2 425
KH-A 428
KHB-A 429
KH-A-NL 430
KH 431
KHB 432
KD 434
KDB 435
KD-NL 436
KD-T 437

Tapping Chuck

KTP 451
KTL 452
KTLP 453

Tap Adapter

WE 458
WES・B 459
WEN 460
WESN・B 461

Adjustable Adapter

D 468
F 470
H, M 472
N 473
T 474

Endmill Chuck

EM・A 478

Straight Drill Chuck

DC 482
DC・T, DC・N 483
ED・A 485
ED For Small Diameters 487

Floating Holder

FH-Tr 491
FH-MT 492
FH-ST 493
FH-ST-HDC・A 495

RELATED EQUIPMENT SERIES

Spanner Head Torque Wrench

BT/QL-MH 498
SH/CL 499

Shrink Fit System

ISG3400 500
SRK-HA1, SRK-HB2 504
SPN2-SRK-PS1 505

Digital measuring equipment of reference posision

ZM-1 / ZM-2 506

Tool Presetter

OTP400, OTP600 507
AOTP 510
NTP-300A, NTP-400 514

HSK Clamper

SPN1-HSK 516
HCL 517

R Zero Setter

SPZ-2 518

Simple Setter

SPHV-3 519
SPN 522
SPK-K 526
SPK-KHA 529
SPW 532
SPK-STC 535
SPT 538

BUSH AND CHAMFERING DRILL

Drill Jig Bush

A 544
B 546
C 548
D 550
E 552
F 554
G 556
T 557
R 558

Chamfering Cutter Series

FM 561
BM 562
BZ 563

Chamfering Series

Chamfering Drill 565
Gold Chamfering Drill 567
NEW Chamfering Drill 568
Chamfering Holder 569

TROUBLESHOOTING

Milling Chuck 572
Hydraulic Chuck 574
Stub Holder 576
Tapping Chuck 578

MEMO

Holder Selection Guide

Holder Type	Model		diameter		Performance			
			metric	inch	Runout Accuracy	Rigidity	Clamping Force	Balance
Milling Chuck	Super Tite-Lock Milling Chuck	CTS	16-42 (6-32)	0.750-2.000 (0.250-1.500)	★★	★★★★	★★★★★	★★★
	Super Tite-Lock Milling Chuck (Flange Through Type)	CTSCF	16-42 (6-32)	0.750-2.000 (0.250-1.500)	★★	★★★★	★★★★★	★★★
	Super Tite-Lock Milling Chuck (High-Balanced Type)	CTSE	16-42 (6-32)	0.750-2.000 (0.250-1.500)	★★	★★★★	★★★★★	★★★★
	Tite-Lock Milling Chuck	CTA	16-42 (6-32)	0.750-2.000 (0.250-1.500)	★★	★★★	★★★★	★★★
	Tite-Lock Milling Chuck (Flange Through Type)	CTACF	16-42 (6-32)	0.750-2.000 (0.250-1.500)	★★	★★★	★★★★	★★★
Collet Holder	Drill Holder Easy Tool Length Adjustment	SDM	0.5-22	0.020-0.866	★★★	★★	★★	★★★
	High-Precision Collet Holder	HDCA	0.5-22	0.020-0.866	★★★	★★	★★	★★★
	High-Precision Collet Holder (Flange Through Type)	HDCACF	0.5-22	0.020-0.866	★★★	★★	★★	★★★
	High-Precision Collet Holder (High-Balanced Type)	GDCA	0.5-22	0.020-0.866	★★★	★★	★★	★★★★★
	Collet Holder For Small Diameters	ERC	—	0.020-0.394	★★★	★	★	★★★
"R"Zero Holder	"R" Zero Holder For Large Diameters	CTZ	25-42 (6-32)	—	★★★★★	★★★	★★★★★	★★★
	"R" Zero Holder	HDZ	0.5-22	0.020-0.866	★★★★★	★★	★★	★★★
	"R" Zero Holder (High-Balanced Type)	GDZ	0.5-22	0.020-0.866	★★★★★	★★	★★	★★★★★
	"R" Zero Holder For Small Diameters	ERZ	0.5-7	0.200-0.276	★★★★★	★	★	★★★
	Slim Hydro "R" Zero Holder	PHZ·S	6-12	—	★★★★	★★	★★	★★★
Hydraulic Chuck	Power Hydro Chuck	PHC·A	4, 6-32 (3-16)	0.250-1.250	★★★★	★★★	★★★	★★★
	Slim Hydro Chuck	PHC·S	6-12 16, 20, 25	0.250-0.500	★★★★	★★	★★	★★★
Shrink Fit	Shrink Fit (Small Diameter Type)	SRE	3-8	—	★★★★	★★	★★	★★★★
	Shrink Fit (Slim type)	SRS	6-32	0.250-0.750	★★★★	★★	★★	★★★★
	Shrink Fit (Heavy type)	SRK	6-32	—	★★★★	★★★★★	★★★	★★★★
	Shrink Fit (DIN Standard)	SRD	6-32	0.250-1.500	★★★★	★★★★★	★★★	★★★★
Side Lock Holder	Side Lock Holder	SLA	16-42		★	★★★★★	★★★★	★★
	Side Lock Holder	SL2	6-42		★	★★★★★	★★★★	★★
	Side Lock Holder	SLB	16-48		★	★★★★★	★★★★	★★

(When collet is used)

Holder Type	Model	Accessory			Function	Drilling		End-milling			Reamer
		Collet	Cap	Wrench Spanner		Normal	High Precision	Heavy	Light	High Precision	Reaming
Milling Chuck	CTS	MC ※1		HS	Coolant	●		●	●		
	CTSCF	MC ※1		HS	Flange Through	●		●	●		
	CTSE	MC ※1		HS	Coolant High-Balanced	●		●	●		
	CTA	MC ※1		HS	Coolant	●		●	●		
	CTACF	MC ※1		HS	Flange Through	●		●	●		
Collet Holder	SDM	FDC	HDP	S	Coolant Length Adjustment	●	●				●
	HDCA	FDC	HDP	S	Coolant	●	●		●	●	●
	HDCACF	FDC	HDP	S	Flange Through	●	●		●	●	●
	GDCA	FDC	GDP	FK	Coolant High-Balanced	●	●		●	●	●
	ERC	ER FDC-07	ERP	S·E	Coolant	●					
"R"Zero Holder	CTZ	MC ※1		HS	Coolant Runout Adjustment	●	●		●	●	●
	HDZ	FDC	HDP	S	Coolant Runout Adjustment Length Adjustment	●	●		●	●	●
	GDZ	FDC	GDP	FK	Coolant Runout Adjustment High-Balanced	●	●		●	●	●
	ERZ	ER FDC-07	ERP	S·E	Coolant Runout Adjustment	●	●				●
	PHZ·S			L	Coolant Runout Adjustment	●	●		●	●	●
Hydraulic Chuck	PHC	PHS ※1		L	Coolant Length Adjustment	●	●		●	●	●
	PHC·S			L	Coolant	●	●		●	●	●
Shrink Fit	SRE				Coolant	●	●		●	●	●
	SRS				Coolant	●	●		●	●	●
	SRK				Coolant	●	●	●	●	●	●
	SRD				Coolant	●	●	●	●	●	●
Side Lock Holder	SLA					●		●			
	SL2					●		●			
	SLB					●		●			

※ 1. Can be used without a collet.

MEMO

PRODUCT INTRODUCTION

Introduction

If you have appliccation problems, let us know!
NT TOOL has many unique tools and standard tools.
We do custom / special tools to meet your specs.
If you don't see tools you are looking for on this catalog,
don't give up and give us a call!



ABOUT NT USA CORPORATION

Since it's foundation, NT Tool has focused on developing and providing precision tooling systems for manufacturers in the automotive, aerospace, medical, and die mold industries. As a forerunner and as a pioneer of this field, NT Tool continually strives to achieve the highest product and customer support satisfaction in the industry through the development of new cutting edge technology, and a motivated technically knowledgeable support staff.

Rustproof Tool Holder

NT TOOL, the best protection against rust!

Special rust proof coating on entire surface including the tapered shank.
(CAT, BT, SK only)

Prevent seizure and scoring caused by metal abrasion against the machine spindle.

Special coating protects spindle from abnormal wearing.

Safe with water-soluble coolant.

*Some holders are excluded.



Protect spindle from damage

Longer cutting tool life

Maintain good accuracy

Rustproof

NT TOOL's rust-proofed holders maintain processing accuracy without additional rust prevention.



NT's special surface treatment

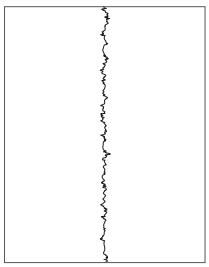

RMAX 0.8μ

Ordinary tooling

Without proper maintenance for rust prevention, ordinary tool holders will begin to rust after several days in use. This rust has negative effect on machining accuracy and/or spindle.

When the taper area gets rusty, the runout accuracy of the tip of a cutting tool deteriorates by 0.01-0.02mm.



Rusted surface of standard product

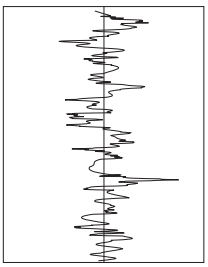

RMAX 15μ

Power Hydro Chuck

NEW!

NEW! Hydro chuck with collet holder flexibility!

PHC·A has improved clamping pressure for high precision, stable clamping force with collet versatility.

PHC·A

BT····· 104
CAT····· 208
AHO····· 258
HSK·A····· 314
HSK·E····· 361
HSK·F····· 368
UTS····· 400



Easy to use! Versatile application!

20% more clamping force than a collet holder!

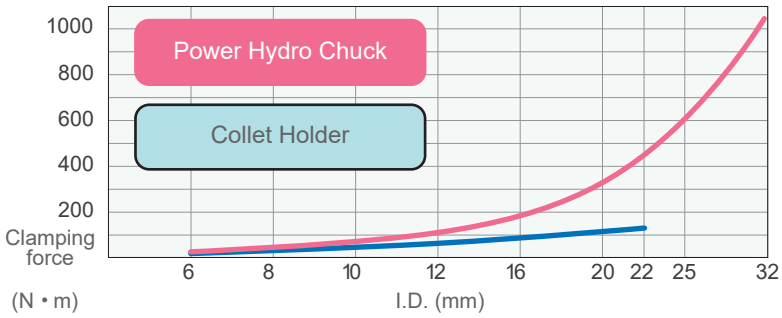

Maximum rotational speed

Chuck size	Maximum rotational speed
PHC04A～16A PHC0250A～0625A	20,000 min^{-1}
PHC20A～25A PHC0750A～1000A	15,000 min^{-1}
PHC32A PHC1250A	10,000 min^{-1}

φ3 shank cutting tool can be clamped using a collet with stopper pin. (PHS series)

- Using PHS collet, variety of shank sizes can be clamped and protect inner shank from damage/scratch.
- For higher precision chucking, align ▲ markings on a PHC·A chuck and collet.

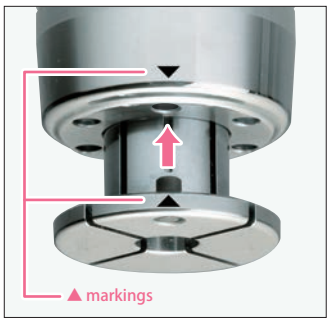

Collet with stopper pin

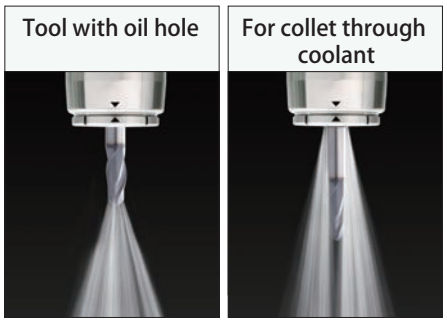

Internal coolant feeding enabled.

Easy! Quick! Simple Clamping!!

Simple one hand clamping operation with a hex wrench.

Numerous ID sizes!

1mm increments on metric size (6mm - 32mm)
Standard inch size (0250" - 1250")

*φ4mm is available.

Available in various spindle interfaces

BT/CAT/SK | AHO (NBT/WBT) | HSK(A/E/F) | UTS

UTS/CAT/SK shank and inch size are available. Please contact NT TOOL for details.

Special / Custom Sizes on request

Excellent performance!

High precision

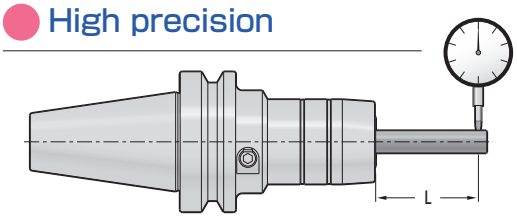

Chuck I.D.	Projection length (L)	Accuracy
φ6～φ14mm φ0.250"～φ0.500"	50mm	3μm
φ15～φ32mm φ0.625"～φ1250"	100mm	

"Dual clamping points system" for stable and high precision clamping.

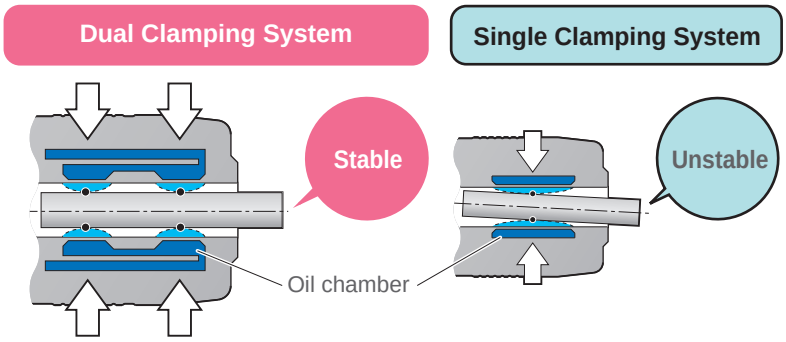

Anti-vibration effect provides better surface



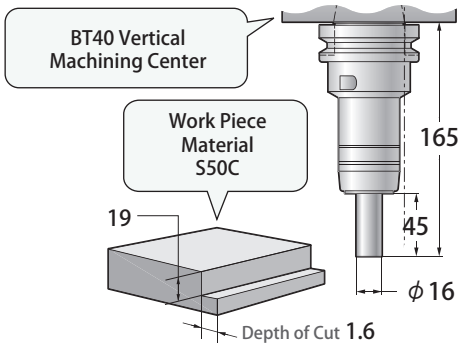

Feed	550 mm/min
Rotational Speed	1650 min^{-1}
4-flute carbide Endmill	
Feed per flute	0.08 mm/flute

Minimize set up time!

Tool pre-set without height offset

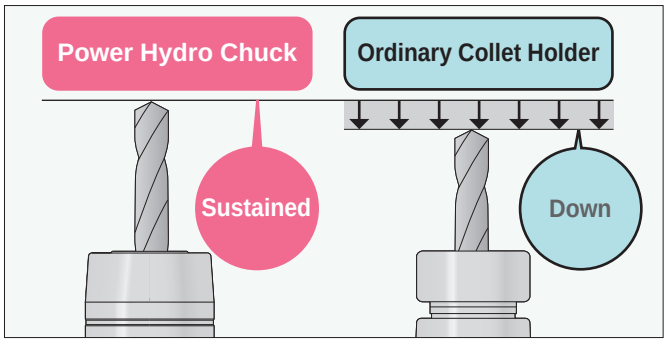

Length adjustment function (Sold separetely)

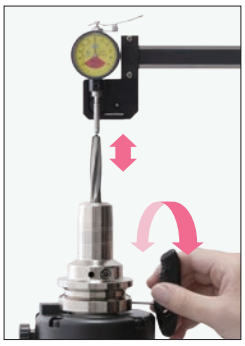

Cutting tool height can be adjusted on the side with a hex wrench.
(BT , CAT and SK shank)

* CAT/SK shank are available.

Please contact NT TOOL for details.

Slim Hydro Chuck

NEW!

PHC•S

Perfect choice for tight space applications, such as endmill finishing, drilling and reaming on 5-axis machines.

BT····· 112
CAT····· 214
AHO····· 260
HSK-A····· 318
UTS····· 402



Easy! Quick! Simple Clamping!!

Simple one hand clamping operation with a hex wrench.

No-slip grip

Available in metric and inch sizes.

Inch : ϕ0250"- ϕ0500"
Metric : ϕ6 - 12, 16, 20, 25mm

Tool pre-set without height offset

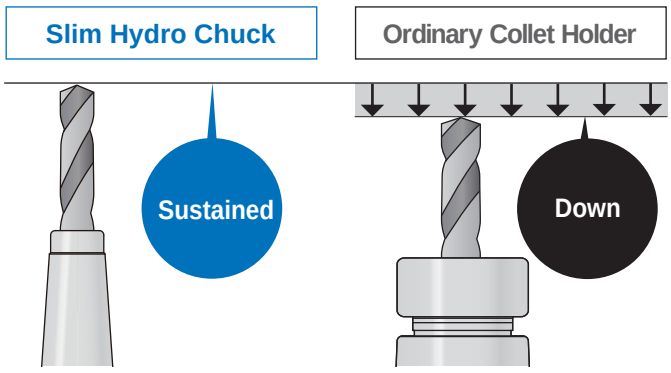

"Dual clamping points system" for stable and high precision clamping.

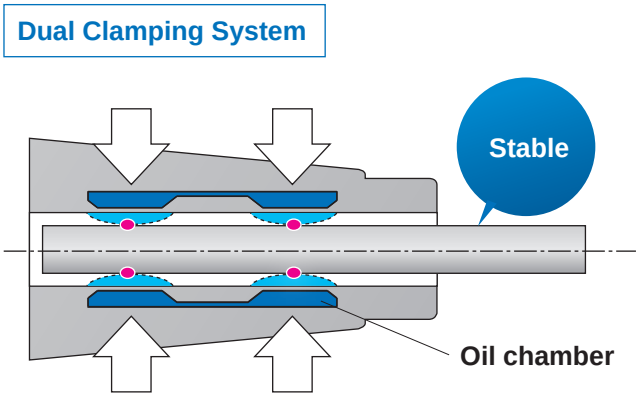

Special / Custom Sizes on request

Anti-vibration effect

High pressured oil chamber around the chucking sleeve absorbs cutting vibrations.

Slim Type Shrink Fit Chuck

Vibration Test

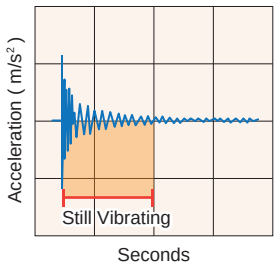

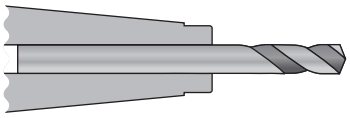

Solid metal body does not absorb cutting vibration.

Slim Hydro Chuck

Vibration Test

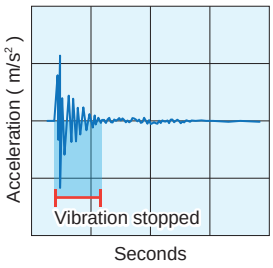

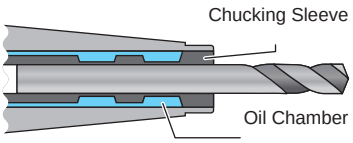

Oil chamber around the chucking sleeve absorbs cutting vibrations.

Work surface comparison

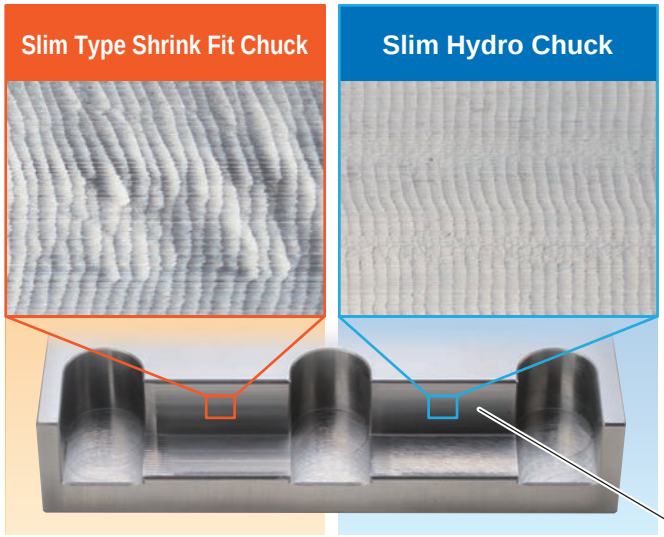

Cutting Condition	
Machine	Vertical Machining Center
Work Piece Material	S50C
Cutter	ϕ12 carbide end-mill with 4 irregular pitch flutes
Rotational Speed	4,200min^{-1}
Feed	850mm/min

Side wall milling : 1mm × depth 18mm

High precision

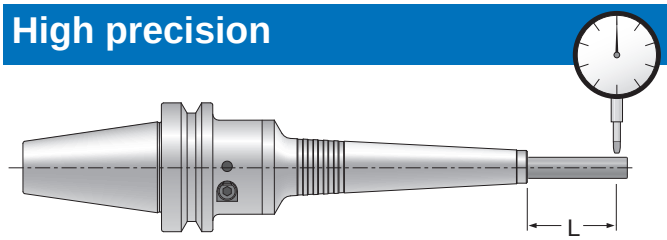

Holder I.D.	Projection length（L）	Accuracy
ϕ6~12, 16, 20, 25 (ϕ0.250”~0.500")	4d	3μm

Cutting applications

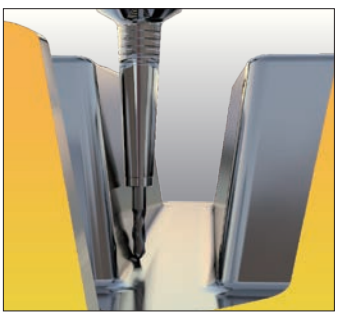
Finishing with ball endmill in tight space


Finishing with ball endmill on 5-axis machine

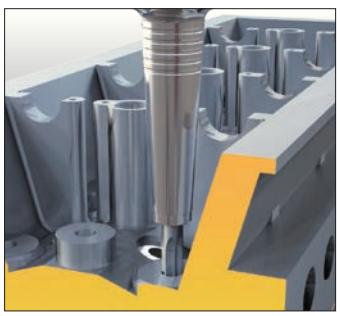
Reaming in tight space

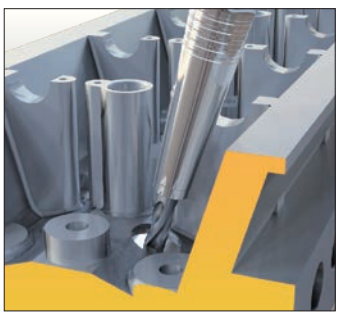
Drilling in tight space

Slim Hydro"R"Zero Holder

NEW!

Hydro+α

PHZ·S

BT····· 103
CAT····· 207
HSK·A ····· 312

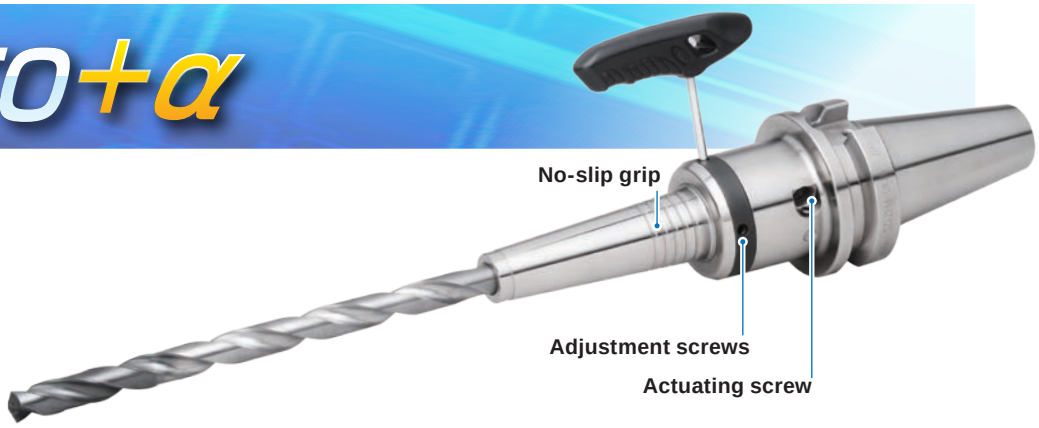

Use for

High precision cutting without interference with a jig.

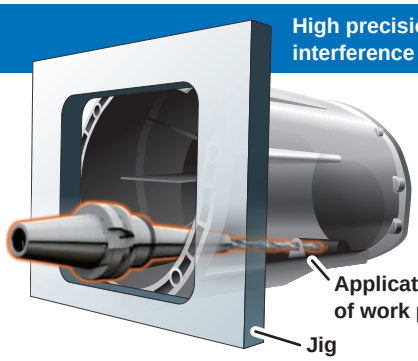

High precision cutting in a deep/narrow hole.



Slim Hydro Chuck

Tool pre-set without height offset

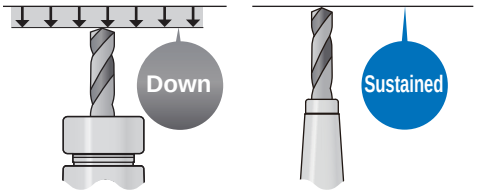

Ordinary Collet Holder

Slim Hydro "R" Zero Holder

Easy! Quick! Simple Clamping!

Simple one hand clamping operation with a hex wrench.

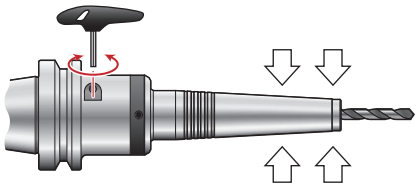

"Dual clamping points system" for stable and high precision clamping.

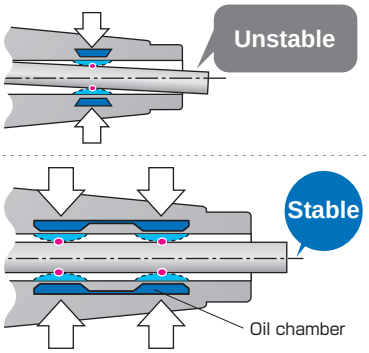

Anti-vibration effect

High pressured oil chamber around the chucking sleeve absorbs cutting vibrations.

Slim Type Shrink Fit Chuck

Vibration Test

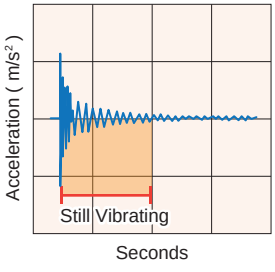

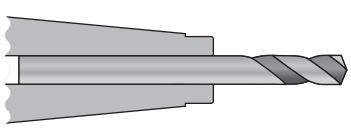

Solid metal body does not absorb cutting vibration.

Slim Hydro "R" Zero Holder

Vibration Test

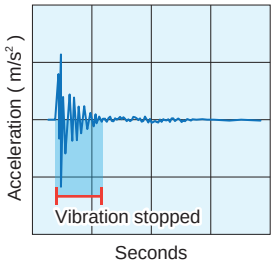

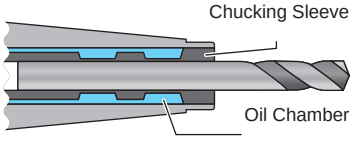

Oil chamber around the chucking sleeve absorbs cutting vibrations.

Special / Custom Sizes on request

"R"Zero Holder

NT's original and accurate 4 points adjustment system

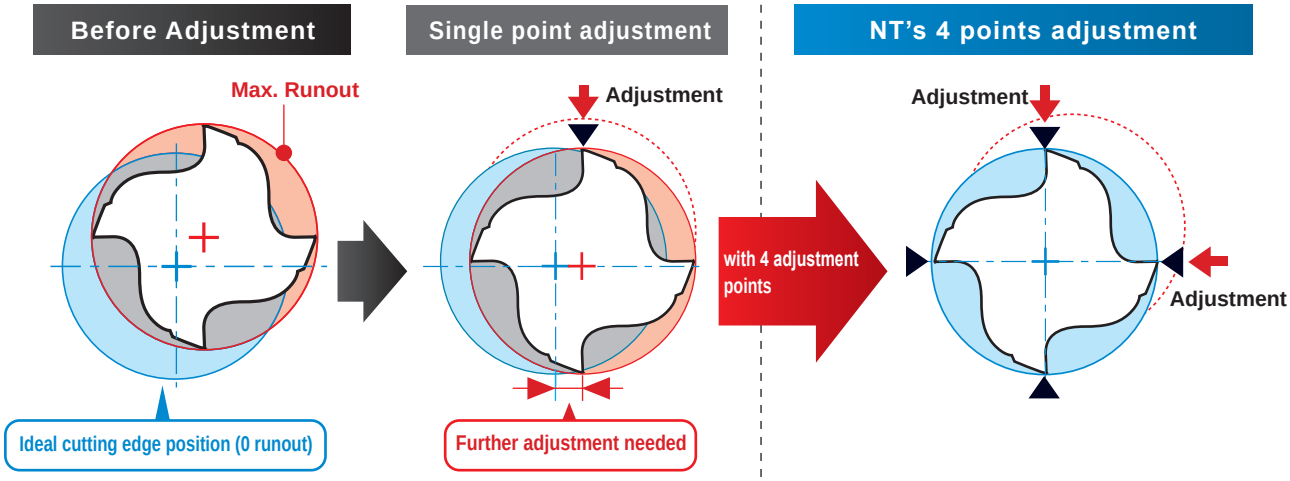

Competitor's Single point adjustment

With single point adjustment, runout cannot be adjusted to zero unless the exact max. runout point is found.

NT's 4 points adjustment

No matter where the max. runout point is, runout can be adjusted to zero!

Simple Operation- Runout of the cutting edge can be adjusted to 0 to 2 μm by simply tightening 4 adjustment screws.

Even if the runout at 4d is in allowable range, runout at the actual cutting edge is much larger as the projection length of the cutter gets longer.
NT's "R" Zero holder realizes invariant hole diameter, better surface roughness and long tool life by adjusting runout at the cutting edge as closely as to zero.

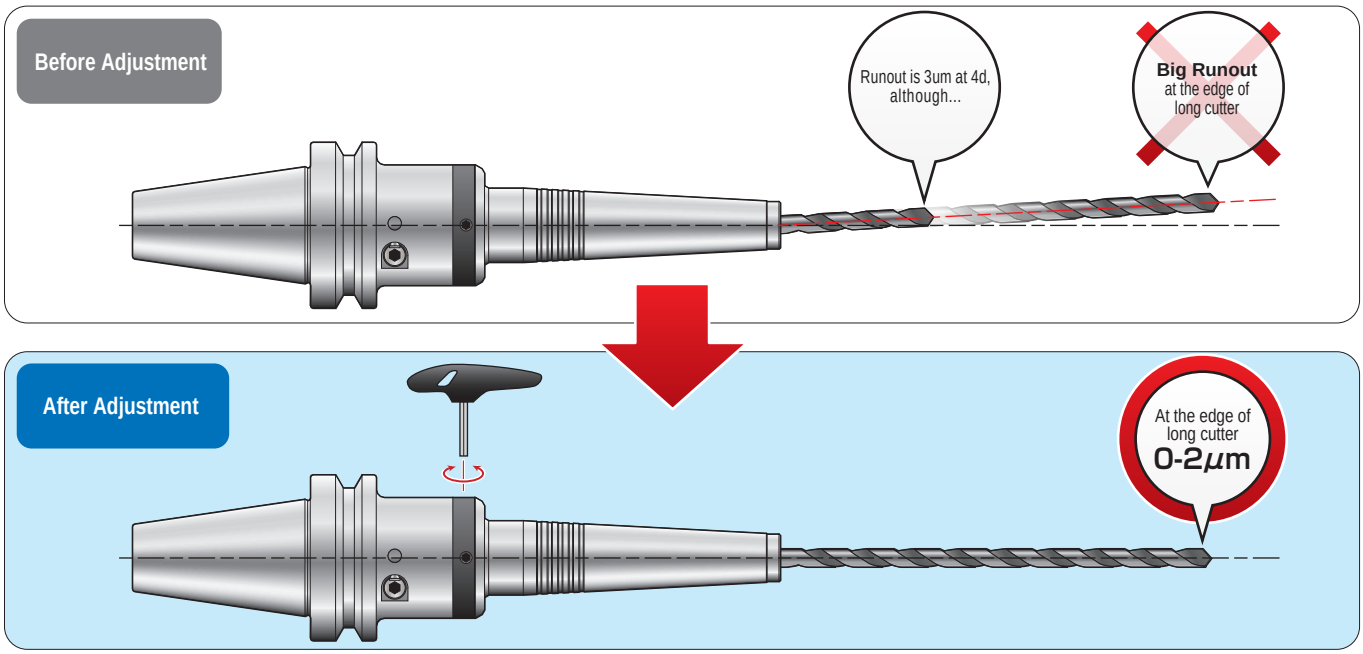

Longer tool life | **Better surface roughness** | **Invariant hole diameter**

"R" Zero Holder for Large Diameter

NEW!

For Large Diameter
CTZ

BT····· 098
CAT····· 206
AHO····· 256
HSK-A····· 308
UTS····· 398

Runout of the cutting edges can be adjusted to zero.

NT' s original 4 Points adjustment system for easy, accurate and speedy runout adjustment!

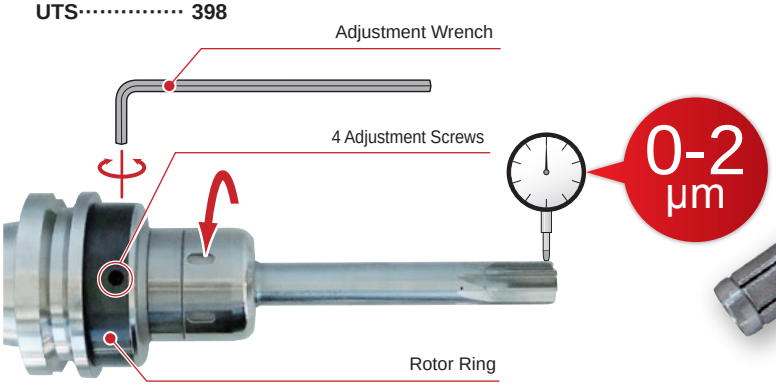



Holder Type	Max. Adjustable Amount (at 100mm from a holder nose)
CTZ25A	60μm
CTZ32A	50μm
CTZ42	50μm

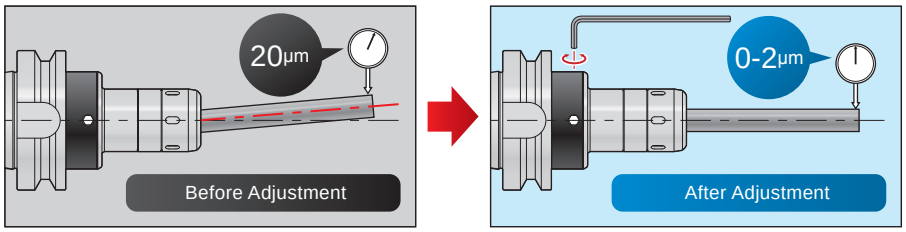

Simple operation - Runout of the cutting edge can be adjusted to 0 to 2 μm by simply tightening 4 adjustment screws.

Cutting Data

Cutting Data – Reaming

Adjusting the cutting edge to zero runout makes high precision and invariant holes finishing possible.

Cutting Condition

Holder : BT40-CTZ32A-125
Cutting tool : Carbide reamer
Rotation speed : 150min^{-1} (Peripheral speed13m/min)
Feed : 45mm/min(0.3mm/rev)
Projection length : 280mm
(Cutting tool projection length:155mm)
Removing amount : φ0.3

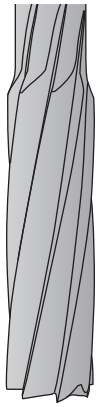

Before Adjustment

Cutting edge runout :38μm

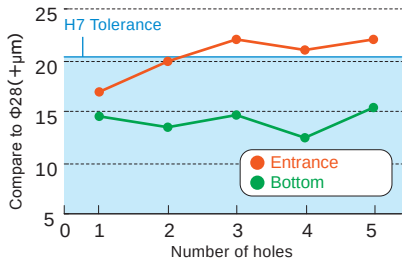

•The dimensions of processed holes are out of the tolerance.
•Hole diameter is different at the entrance and the bottom.

After Adjustment

Cutting edge runout :2μm

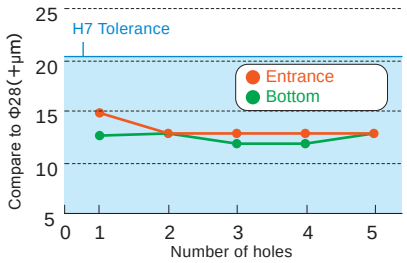

•Hole diameter is stabilized within the tolerance.
•Hole diameters at the entrance and the bottom are almost consistent.

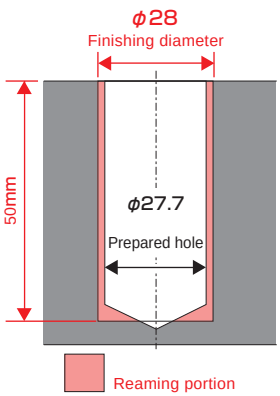

Special / Custom Sizes on request

"R" zero holder series

Most Popular!

Standard type
HDZ

BT····· 096
CAT····· 204
AHO····· 254
HSK·A····· 306
UTS····· 396



High balanced type
GDZ

BT····· 100
HSK·A····· 309



Small Diameter Type
ERZ

BT····· 102
HSK·A····· 311
UTS····· 399



Straight shank
ST-HDZ

ST····· 082



NT's original and accurate 4 points adjustment system

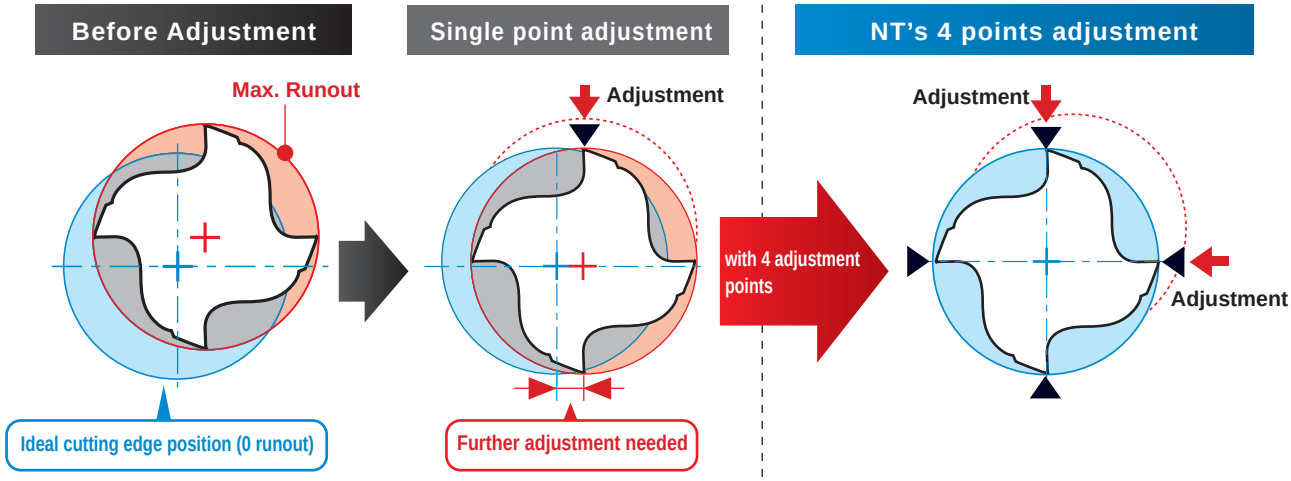

Competitor's Single point adjustment

With single point adjustment, runout cannot be adjusted to zero unless the exact max. runout point is found.

NT's 4 points adjustment

No matter where the max. runout point is, runout can be adjusted to zero!

"R"Zero setter
SPZ-2

■SPZ-2 ····· P. 518

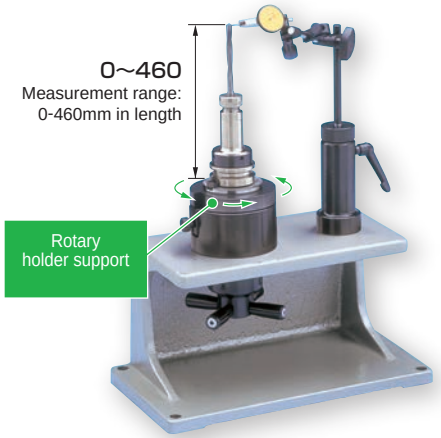

Easy to measure runout accuracy

Rotary holder support

Any tool interface can be prepared. (BT, HSK, UTS, SK etc.)

Holder pull-in device

Enables tool change by pulling in (with 4-8kN) and fixing the tool holer.

Super Tite-lock Milling Chuck

Most Popular!

High rigidity type CT・S

BT····· 050
CAT····· 192
AHO····· 248
HSK・A····· 290
UTS····· 384
NT····· 058
Accessories··· 066

New Generation Milling Chuck



⚠ **Caution**
Please rotate the clamping ring counterclockwise more than 360 degrees after a cutting tool is removed.

Flange through type CT・S-CF

BT····· 056

High balanced type CT・S-E

BT····· 054
CAT····· 194
HSK・A····· 292

Unique retaining ring allows high speed milling

Two-stage tightening

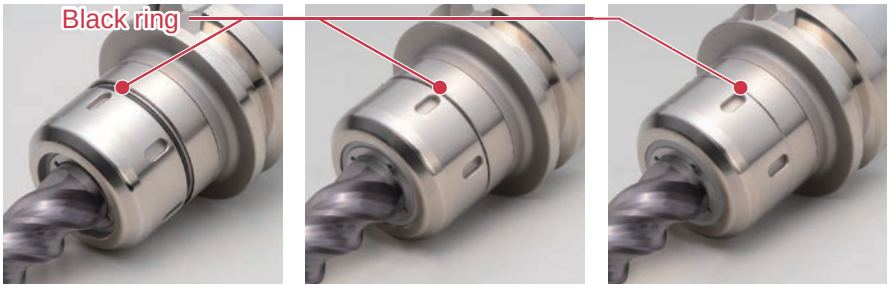

● **Before clamping**

● **Stage one**

Finish milling
Tighten clamping ring till the black ring is not visible.

● **Stage two**

Heavy milling
Completely tighten clamping ring to achieve maximum gripping torque.

New patented“T-slit”design minimizes slippage and pull out of end mill.

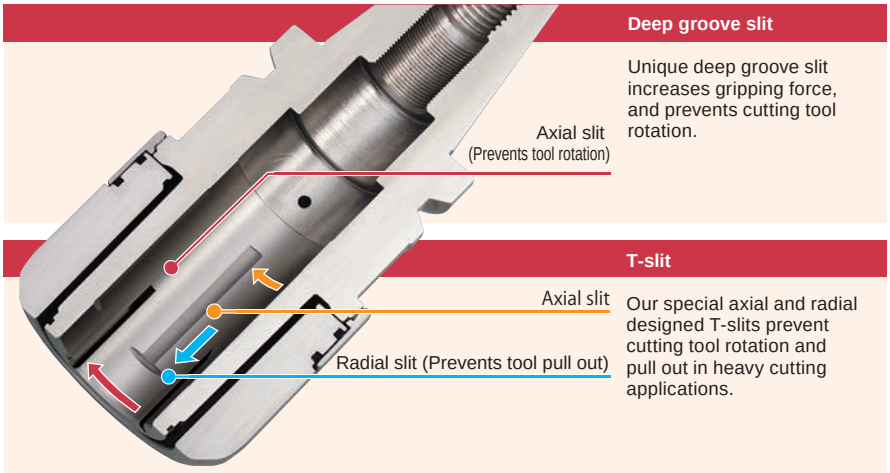

Deep groove slit

Unique deep groove slit increases gripping force, and prevents cutting tool rotation.

T-slit

Our special axial and radial designed T-slits prevent cutting tool rotation and pull out in heavy cutting applications.

Improved durability is ensured by our perfect seal mechanism

Combination use of rubber seal and special resin seal blocks dust entrance, and realizes long durability.

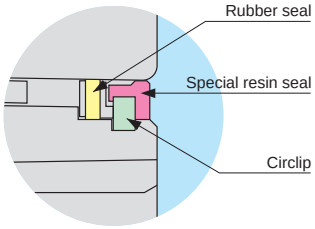



Center-through coolant feeding compliant



For cutters with coolant hole



For collet through coolant With MC-C collet

Special / Custom Sizes on request

Collet Holder

Most Popular!

High precision type
HDC·A

BT····· 070
CAT····· 196
AHO····· 250
HSK·A····· 296
HSK·E····· 358
HSK·F····· 366
UTS····· 390
ST····· 081



High balanced type
GDC·A

BT····· 076
CAT····· 200
HSK·A····· 300



Chucking accuracy of AA grade collet (chucking range: 0.5-22.0mm) is within 5 micrometers at 4d.

Preset screw

HDS−※※ Type — Standard

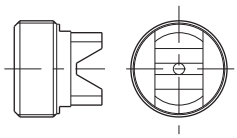

The operator can adjust the projection length of the cutting tool from the cap end.

HDS−※※−※ Type — with hex. hole (option)

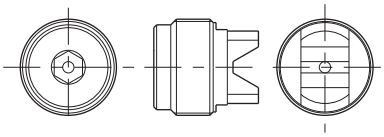

The operator can adjust the projection length of the cutting tool by using a hexagon wrench from the holder shank side.

HDS−※※−MS Type — For semi-dry machining (option)

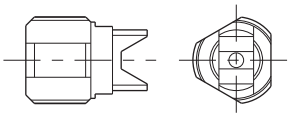

For semi-dry machining.The operator can adjust the projection length of the cutting tool by using a hexagon wrench from the holder shank side.

The HDC-A comes with a standard preset screw. You may purchase a preset screw separately for the HDC-A and GDC-A according to various requirements.

Coolant supply



Tool with oil hole
FDC-OH type
8,000min^{-1}
6MPa



For collet through coolant
FDC-C type
8,000min^{-1}
6MPa

Recommended tightening torque for the cap nut

When reached the targeted tool projection length, tighten the nut with a special spanner (sold separately) securely.

Holder size	Recommended torque
07	10~15N·m
09	30~35N·m
12	35~40N·m
16	40~45N·m
22	55~60N·m

EASY PRESET SERIES
Drill Holder With Easy Tool Length Adjustment

For drilling
SDM

BT····· 074
CAT····· 198
AHO····· 252
HSK·A····· 298
UTS····· 392

Adjustable tool length

Simple length adjustment - all you have to do is turn the guide ring.(No additional tool is required.)



Advantages of SDM

1. Tool length can be adjusted easily by rotating the guide ring.
2. Center-through coolant feeding enabled.(Max. 7MPa).
3. Preset screw securely locks rotation of cutting tool with tang drive.
4. Size of cutting tools can be changed by simply replacing collets.

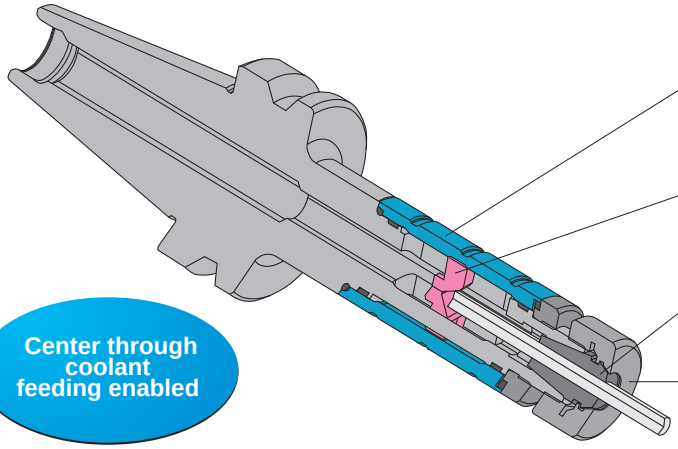

Guide ring
Tool length can be adjusted by rotating this guide ring.

Preset screw

FDC collet (option)
Can be shared with HDC•A collet holder.

HDP nut
Can be shared with HDC•A collet holder.

Length adjustment function



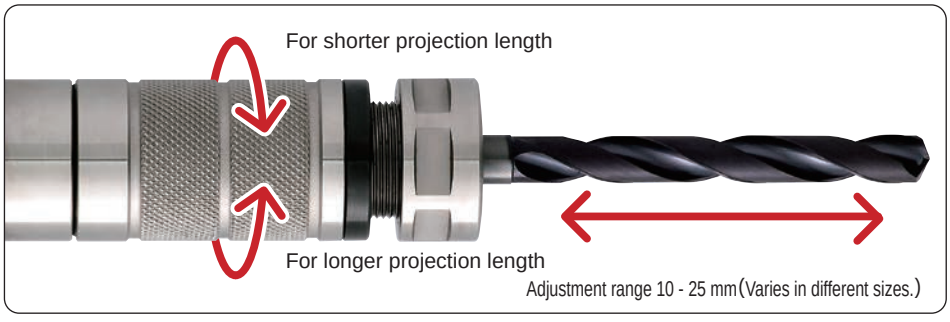

Cutting tool length can be adjusted by roating the guide ring manually.
Easy to set the targeted length - can be adjusted at the same time measuring the length.

EASY PRESET SERIES

Synchronous Tap Holder With Easy Tool Length Adjustment

For tapping

STM

BT····· 124
CAT····· 222
AHO····· 266
HSK-A ····· 332
UTS····· 410



Adjustable tool length

Simple length adjustment – all you have to do is turn the guide ring.(No additional tool is required.)

Advantages of STM

1. Tap projection length can be adjusted easily by turning the guide ring.
2. Center-through coolant feeding is possible (Max.7MPa).
3. Slippage of tap can be prevented by preset driver.
4. Tap size can be changed by replacing preset drivers and collets.

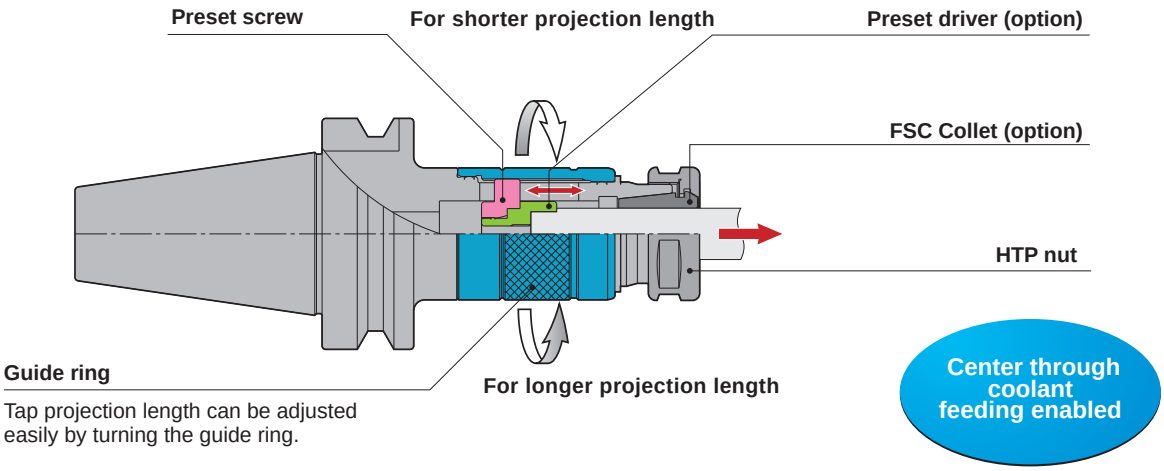

Tap projection length can be adjusted easily by turning the guide ring.

Coolant supply

■Internal coolant feeding enabled.

Maximum coolant pressure:

Tool shank diameter 19mm and below:7MPa

20mm and above: 5MPa(Coolant collet is sold separately.)

(NOTE)Coolant pressure for UTS is different.



Cutter with oil hole
FSC-OH type



For collet through coolant
FSC-C type

Angle Head



Fixed type

AH
AH-OH

AH 90°
BT····· 164
AHO ····· 284
AHE 90°
CAT····· 238
HSK·A····· 355
AH 45°
BT····· 166
AHO ····· 286



Flexible type

AHS
AHL

AHS, AHL
BT····· 168
AHSE, AHLE
CAT····· 240
HSK·A····· 357

●Flexible type:
Any tilt angle can be set at your discretion.

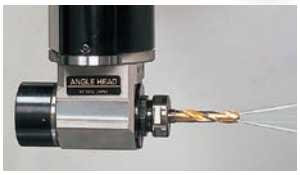

●Center through coolant feeding is possible. World's first standardized internal coolant system, which enables pin-point coolant supply to the desired place.

Coolant type

Fixed type is capable of supplying coolant internally as it is. All you have to do to enable center-through coolant feeding is to add a coolant unit and a coolant collet.

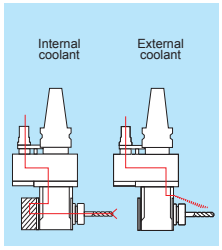

Specifications

Type	Max. rotational speed	Chucking capacity	Tapping capacity	Tilt angle	Internal coolant
Flexible type	3,000min^{-1}	ϕ0.5~ϕ22	M3~M22	0°~90°	
Solid type 45	07 size 6,000min^{-1} other 3,000min^{-1}	ϕ0.5~ϕ16	M3~M22	45°	Yes
Solid type 90	07 size 6,000min^{-1} other 3,000min^{-1}	ϕ0.5~ϕ25	M3~M22	90°	Yes

Guidelines for cutting conditions (Fixed type)

BT50-AH2290-180-80 Cutting examples

Tool	2-flute HSS endmill(dia. 10mm)			2-flute HSS endmill(dia. 20mm)		
Work material	S55C	FC250	A2017	S55C	FC250	A2017
Depth of cut (mm)	11	12	11	4	5	5
Rotational speed (min^{-1})	630	1,000	2,000	400	500	1,000
Cutting speed (m/min)	20	40	63	25	31	63
Feed (mm/min)	60	100	200	60	50	100
Feed per rotation (mm/rev)	0.09	0.1	0.1	0.15	0.1	0.1
	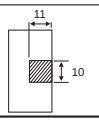	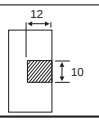	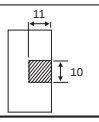	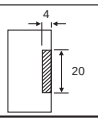	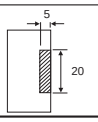	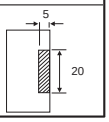

Reduction of plant investment

●Without using a tilt table, machining from different angles can be performed. Set-up cost and plant investment cost can be reduced.
●Fixed type has a much higher rigidity than flexible type.

Quick-change tapping attachment

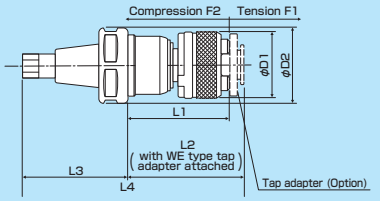

Type	Tap adapter size	Tapping capacity	L1	L2	L3	L4	φD1	φD2	Axial compensation F1	Axial compensation F2
TPC16-1	1	(M15) U1/4~U7/16 (U9/16) PIPE(PT,PS,PF) 1/8~1/4	50	56.5	64.5	121	32	36	10	2
TPC22-1					70	126.5		46		
TPC22-2	2 M3~M12	M8~M22 U3/8~U7/8	69	80	71	150	50	46		

Special / Custom Sizes on request

Hyper Spindle

Speed increaser

HP-H

BT····· 163
CAT····· 237

30,000min^{-1}



Advantages

- Increases tooling revolutions, and reduces cycle time.
- Maximum 30,000 min^{-1}.
- Assures low noise and vibration by precision ground steel gears.
- Tool shanks as small as 0.5mm(0.02in)(FDC 07 series), up to 12mm(0.472in)(FDC 12 series) can be chucked.
- Overheating is prevented by a cooling turbo fan.

Your Current Machines + **Hyper Spindles** = **5 times faster**

Hyper spindles increase tooling revolutions up to 5 times higher (maximum 30,000min-1), enabling you to reduce per-piece cost with your current machines instead of installing new machines.

Cutting data

	BT50-HP07H-150	BT50-HP07H-150	BT50-HP12H-165
Work material	(A2017) aluminium alloys		
(min^{-1}) Revolution	30,000		
送り(mm/min) Feed(in/min)	1200(47.28)	900(47.28)	1200(47.28)
刃径(mm) Mil dia(in)	6.0(0.24)	3.0(0.12)	12.0(0.47)
Depth of cut	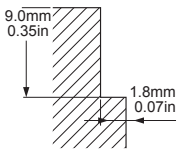 Two-flute endmill (HSS)	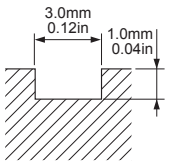 Two-flute carbide endmill	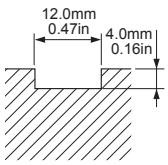 Two-flute carbide endmill

Recommended tightening torque

Size	Spanner for cap	Spanner for head shank	Recommended torque value
HP07H	S - 0	16 mm	10～15N•m (80～133lbf-in)
HP09H	S - 1L	21 mm	30～35N•m (266～310lbf-in)
HP12H	S - 3L	21 mm	35～40N•m (310～354lbf-in)

Maximum rotational speed and chucking accuracy

Size	Collet size	Speed ratio	Max. speed	Chucking accuracy
HP07H	FDC07	1 : 5	30,000min^{-1} (M/C6,000min^{-1})	10μm／4D (0.4μin／4D)
HP09H	FDC09			
HP12H	FDC12			

Shrink Fit System

Shrink Fit Chuck

Heavy Type(DIN STANDARD) S R D

BT····· 118
CAT····· 218
AHO····· 262
HSK·A····· 326
HSK·E····· 363



Heavy Type S R K

BT····· 122
HSK·A····· 325
UTS····· 406



Small Diameter Type S R E

BT····· 114
CAT····· 216
HSK·A 322
HSK·E····· 362
UTS····· 404



Slim Type S R S

BT····· 120
CAT····· 220
AHO····· 264
HSK·A····· 330
HSK·E····· 364
UTS····· 407



Heating Device

Magnetic Induction Heating Device ISG3400

ISG3400 ·····500

NEW!



Hot Air Type Heating Device SRK-HA1 (100V) SRK-HB2 (200V)(230V)

SRK-HA1 ····· 504
SRK-HB2 ····· 504



Advantages of Shrink Fit Chuck

High retentivity The chucking torque is 2 - 4 times higher than that of collet holders

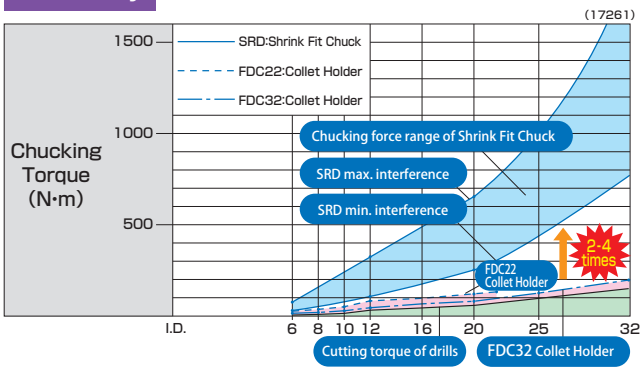

Superior Rigidity Cutting tools with short shanks can be used. Increased rigidity, feed rates, speed, and longer tool life is acheved.

■Rigidity
1.3-1.4 times higher than that of collet holders
1.2 times higher than that of milling chucks

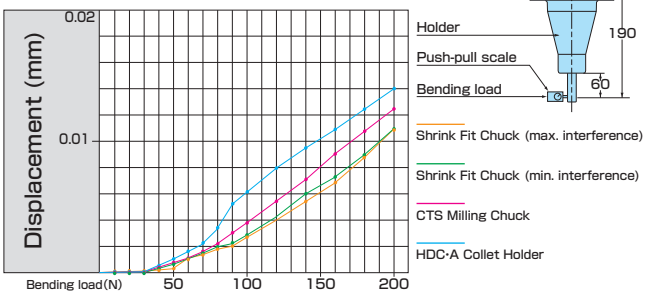

Special / Custom Sizes on request

WBT / NBT AHO Series

Two-face Contact BT holder. Light weight and efficient

WBT-AHO (30, 40, 50) — For BT, Two-face contact spindle

NBT-AHO (30, 40, 50) — For NT's, Two-face contact spindle

AHO Series ·····247 ~ 288

AHO spindle dimension

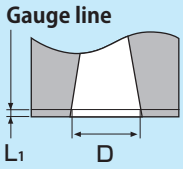

BT	D	※L1	
		NBT-AHO	WBT-AHO
30	31.75	0.2	0.98
40	44.45	0.2	0.98
50	69.85	0.2	1.48

※Tolerance of L1 varies depending on the spindle size.

Easy to make a spindle Please contact us when making spindles.

Clamp mechanism of AHO

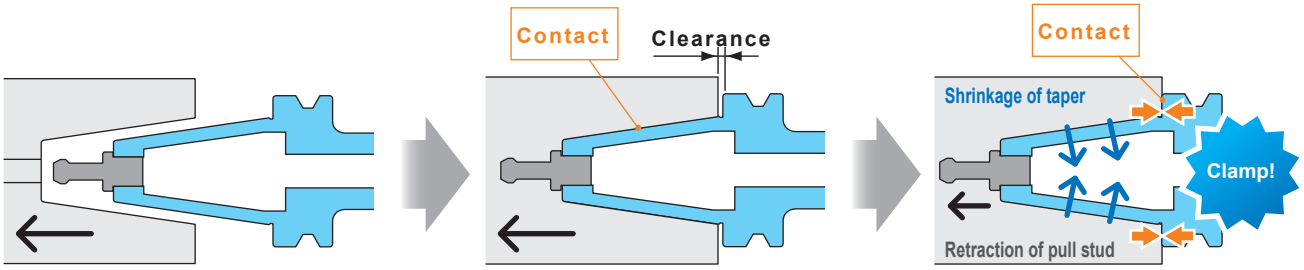

The taper is closely attached but there is a clearance at the end face.

A retraction of the pull stud results in shrinkage of the taper, which leads to a tight flange face contact.

Advantages of AHO

Lightweight holder reduces load to spindle, and improves energy efficiency.

The holder is made lighter by hollowing out the shank. Use of lightweight holder reduces load to spindle, and improves energy efficiency.
Taper shank of BT50 4kg→2.8kg

Perfect two-face contact even at high-speed rotation

Even when the machine spindle expands with centrifugal force, two-face contact is maintained.

Chip removal rate: 20-50% UP

Two-face contact and ideal sustaining balance of taper and flange achieves remarkable increase of performance.

High repetitive accuracy

Taper area of tool holder shrinks along spindle taper. In addition, flange face tightly contacts to the spindle, and realizes precise attachment.

Inhibition of fretting

Continuous contact between the taper and the end face prevents fretting.

Feature comparison of two-face contact holer

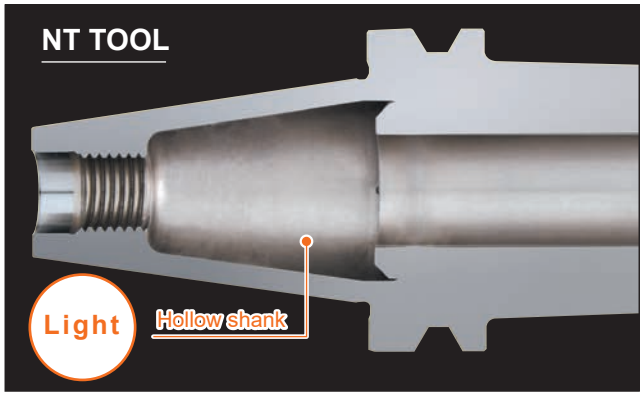

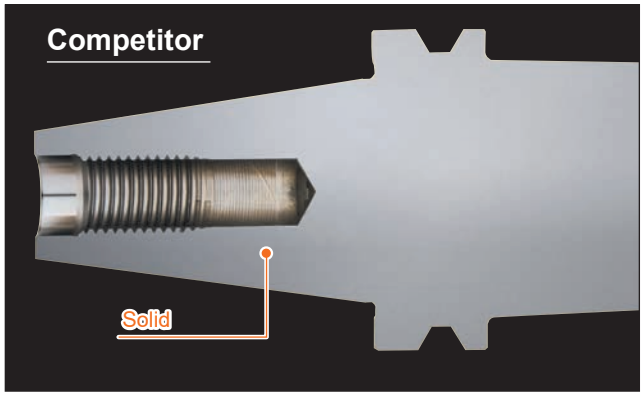

Turning Tools for SPEEDIO M140X1

NEW!



For Facing
SBH
SBH ····· 182
□20

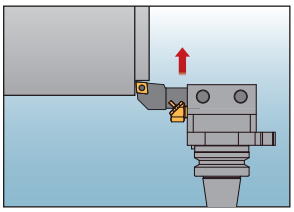

For External / Facing
SBV
SBV ····· 181
□20

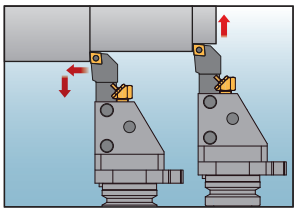

For Boring bar
TSB
TSB····· 183
ϕ10, 12, 16, 20

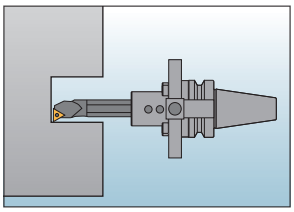

Use for

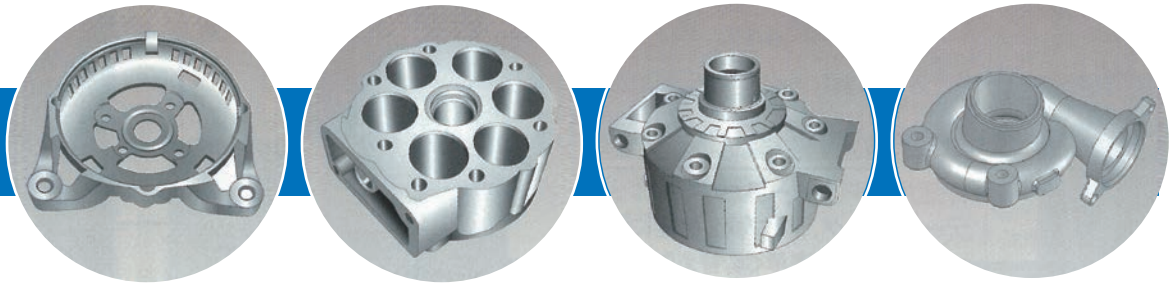



SPEEDIO
M140X1

Turning center + Machining center

New Choice for Process Integration

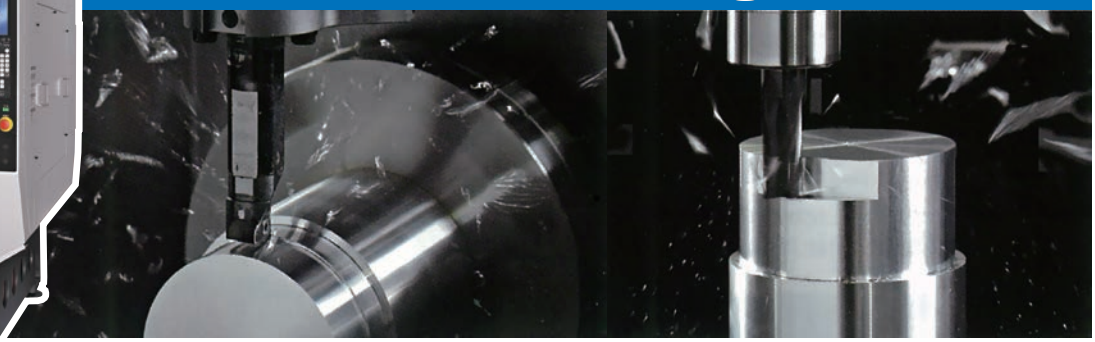

Special / Custom Sizes on request

HSK•T Turning Tools

What is HSK-T?

HSK-T interface was developed to maximize cutting ability of multi-tasking machines.
HSK-T interface became ISO standard (ISO121 164-3:2008) in 2008.

Rustproof
* Some exceptions apply

Coolant Feeding Enabled



For External/Cut-off
SBV

SBV ····· 375

□20, □25, □32

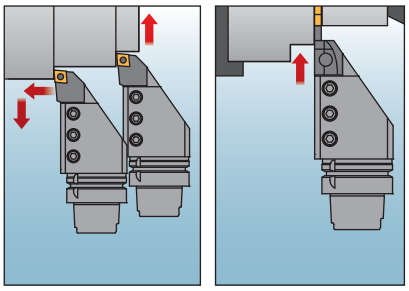

For External/Facing
SBT

SBT ····· 378

□20, □25

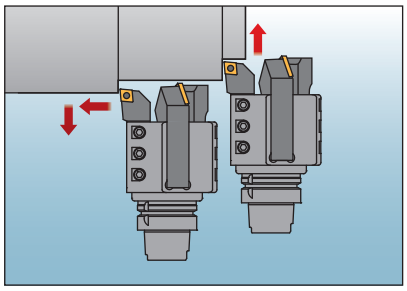

For External/Facing
SBN

SBN ····· 376

□20, □25, □32

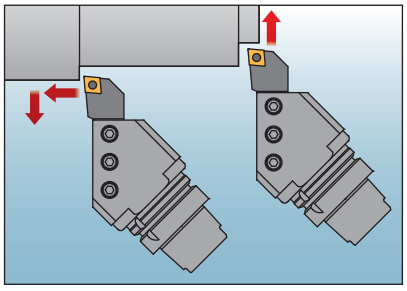

For Boring bar
TSB

TSB ····· 379

ø8-50

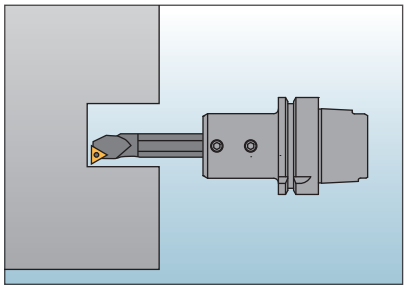

MORI SEIKI CO.,LTD granted NT TOOL a manufacturing and distribution license under the patent No.3720202.

For Facing
SBH

SBH ····· 377

□20, □25, □32

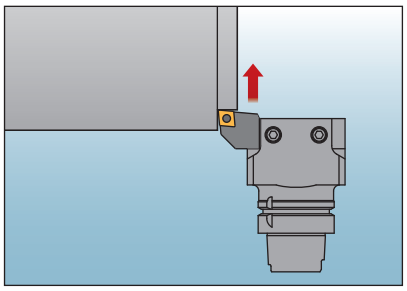

For Drill
TSD

TSD ····· 381

ø16-50

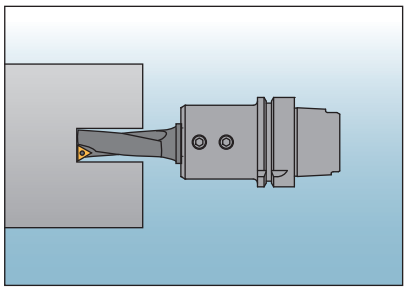

Contactless Optical Tool Presetter

NEW!

Easy to use!
Well thought out operational design.

Contactless Optical Tool Presetter
AOTP

AOTP 510



Specifications and design of the product are subject to change without notice.

User Friendly Mechanical Body



Camera Handle

Simple one hand operation.
Movable in X-axis direction or Z-axis direction separately/simultaneously.

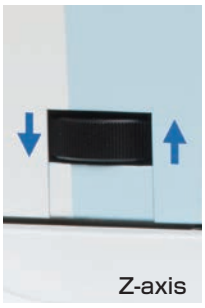



Fine Adjustment Dial for Z-axis / X-axis

Quick camera positioning by rotating the dial.

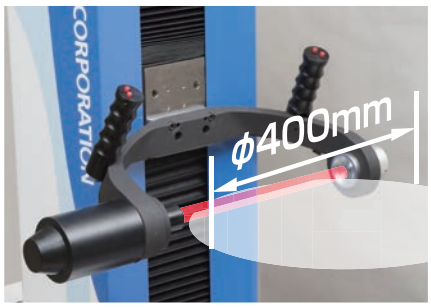

Camera Arm

Measurement up to dia.400mm is possible.



Tightening of a collet holder is possible. (Up to 60Nm)

Move away the camera from the spindle when tightening.

Adjustment of cutting tool projection length and runout measurement / adjustment can be done in one spot.

Mechanical Clamp

400kg air cylinder firmly clamps the tool holder. Good repetitive accuracy of tool holder clamping/unclamping.



Label printer (Option)

Thermal printer. No need for cartridges.
Measured value can be printed.
Tool name, model, comment registered beforehand can be printed together.



Cutting Tool Projection Length Adjustment (Option)

An operation handle for cutting tool projection length adjustment can be added.

Special / Custom Sizes on request

Easy-to-use Software with Tutorial Function.

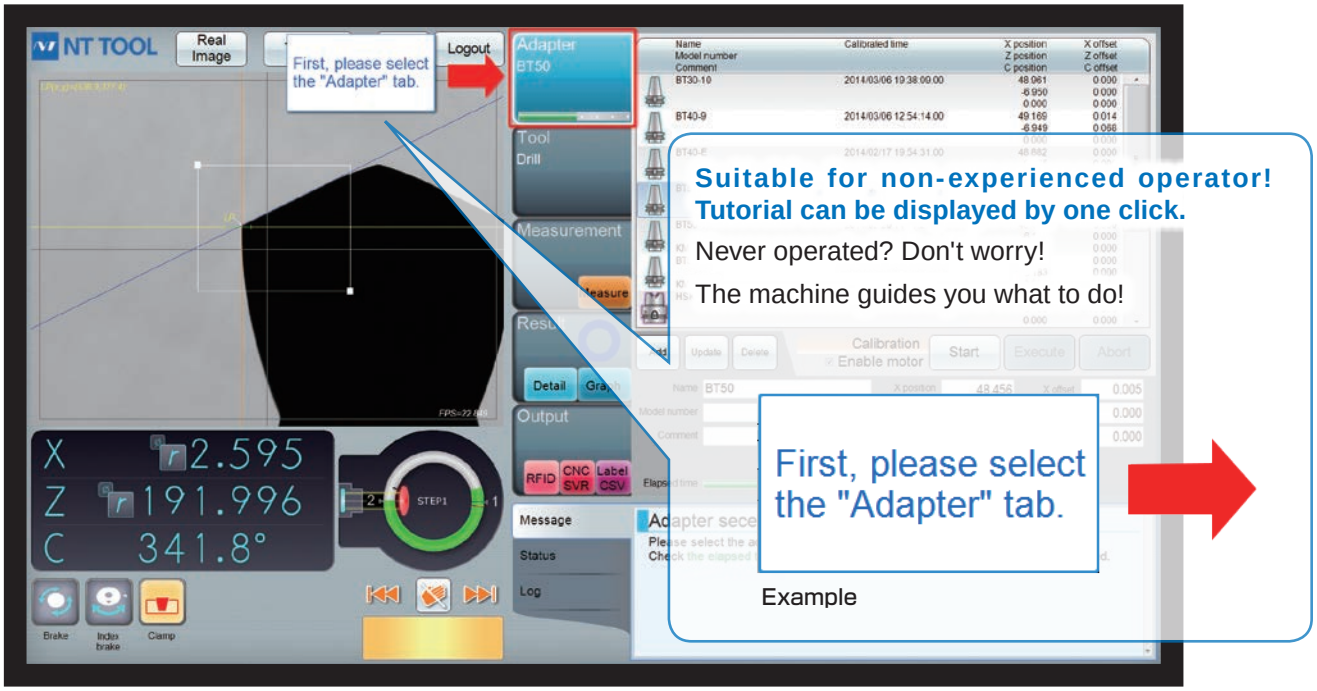

Basic Function

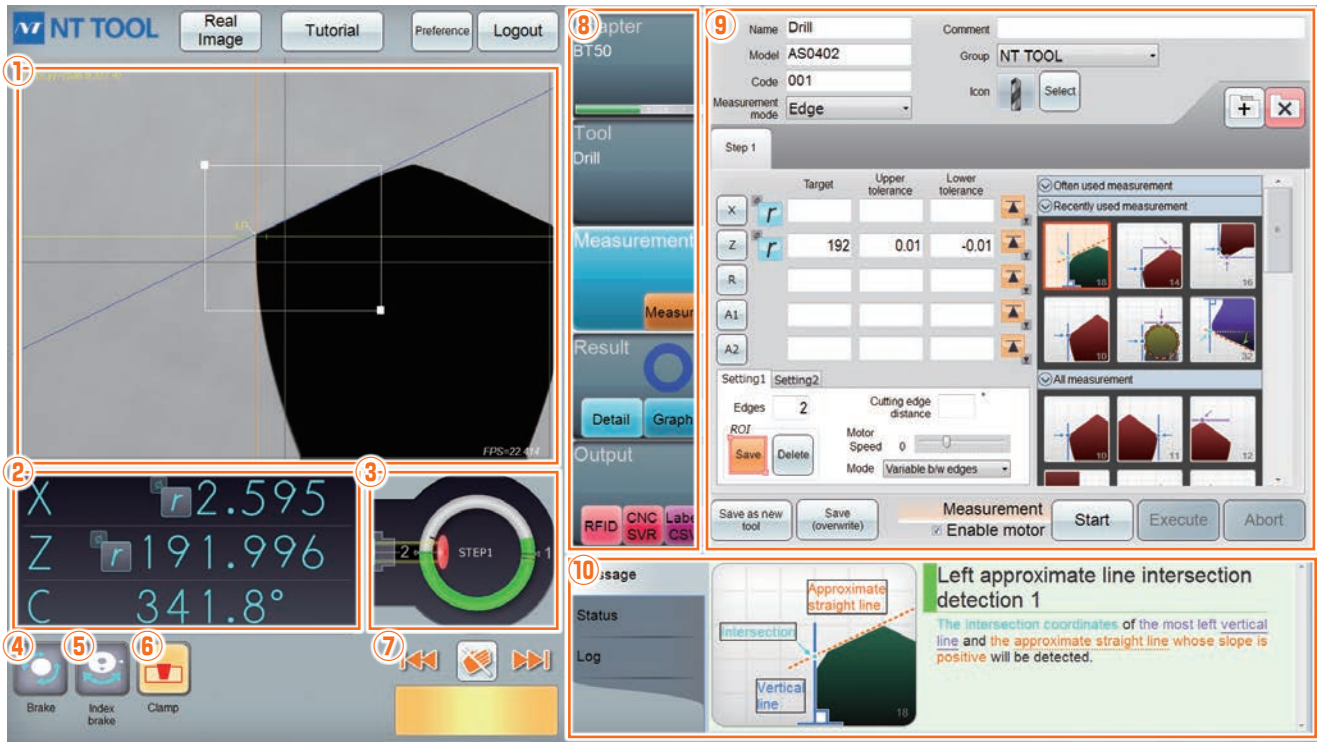

①Camera (Captured Image)
Actual field of view 9.0mm × 6.5mm
30× Magnification
35× Digital Zoom

②Coordinates
X=Radius/Diameter, Z=Height,
C=Rotational Position.
*X and Z value indicates position of the camera center when not measuring.

③Magic Eye
Cutting edge detection

④Break
Spindle can be stopped at any location.

⑤Index Break
Spindle can be pin-locked at 90 degrees.

⑥Clamp / Unclamp

⑦Spindle Control
Forward / reverse to the next / previous cutting edge.
: Free the motor.

⑧Operation Order Tab

⑨Operation Field

⑩Message Field

The software can be customized upon request.
Please contact NT Tool Corporation.

EASY PRESET SERIES
Tool Presetter

Contactless Tool Presetter

Contactless Tool Presetter
OTP400
OTP600

OTP400/600
IC1

OTP-400 ····· 507
OTP-600 ····· 507



Advantages of OTP

- Protect cutting edge by contactless measuring. Ideal method for diamond and CBN tools.
- Various cutting edge shapes can be measured.
- Speedy shape recognition.
- Reduces human errors by image processing.

Basic screen of OTP-IC1

Displaying height, diameter, and cutting edge angle.

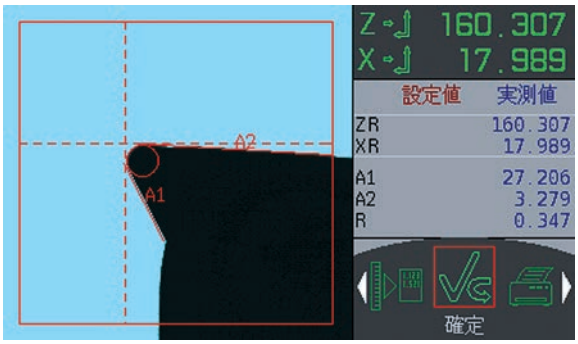

Contact Tool Presetter

TOOL Presetter
NTP-300A

NTP-300A ····· 515

Specifications

■Operation method
Manual
■Tool diameter
0～φ300mm
■Tool length
50～500mm



TOOL Presetter
NTP-400

NTP-400 ····· 514

Specifications

■Operation method
Motor drive
■Tool diameter
0～φ400mm
■Tool length
50～500mm



Special / Custom Sizes on request

"R" Zero Setter

SPZ-2

SPZ-2 ····· 518

Application / Feature

- Less than 3 μm runout accuracy at 200mm (HSK, UTS)
- Rotary holder support for BT, HSK, UTS.
- Holder pull-in mechanism.



Simple Setter

SPHV-3

SPHV-3 ····· 519

Application / Feature

- Light weight and compact design. Placeable on work table.
- Digital scales adopted for both X axis and Z axis.



HSK Clamper

SPN1-HSK

SPN1-HSK ···· 516

Application / Feature

- Easy to clamp holder as just insert HSK (A, C, or T) shank and rotate knob 90 degrees.
- Tool length measurement is possible.



HCL

HCL ····· 517

Application / Feature

- Best suited for tightening milling chucks or collet chucks.
- All types of HSK (A-F, and T) and UTS can be clamped.
- With ADS adaptors, various different shanks can be clamped.
- Tool holder can be clamped by turning the clamp lever only. The clamp lever can be turned in either direction.
- Vinyl mat will prevent damages to taper or flange face of HSK / UTS shank.



Bady only



Bady + ADS Adapter

MEMO

B T

BT (MAS 403-1982)
TOOLING SYSTEM

CT·S

Super tite-lock Milling Chuck

● Slim design milling chuck. Specially designed slits enable heavy endmilling.



Type1

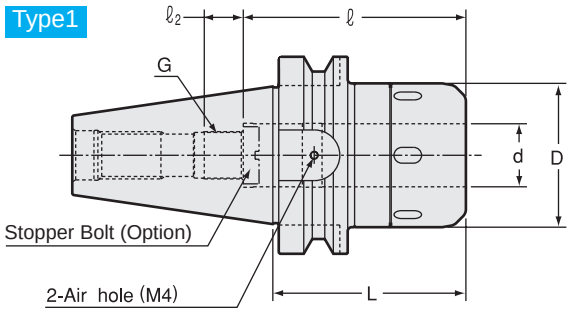

Type2

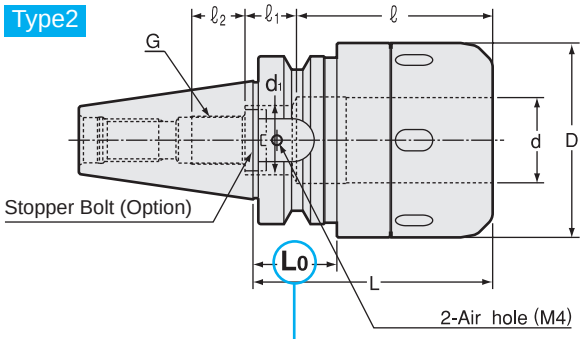

Caution
★ Take caution against A.T.C. arm and tool magazine interference.

Type3

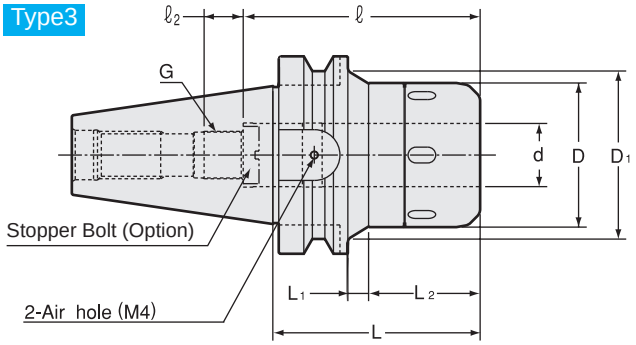

Caution
Please rotate the clamping ring counterclockwise more than 360 degrees after a cutting tool is removed.

Inch Sizes

Unit : Inch

Code	Model	Type	d	D	D1	L	L1	L2	ℓ	ℓ 1	ℓ 2	d1	L0	G P=1.0	kg	Spanner
3140 10124075	**BT30 -CT0750S -75**	2	0.750	2.047	—	2.953	—	—	2.559	—	0.591	—	1.063	M12	1.0	HS-2-20
3140 10124090	**-90**	2	0.750	2.047	—	3.543	—	—	3.150	—	0.591	—	1.654	M12		
3140 10124105	**-105**	2	0.750	2.047	—	4.134	—	—	3.150	—	0.591	—	2.244	M12	1.4	
3140 10132090	**BT30 -CT1000S -90**	2	1.000	2.402	—	3.543	—	—	3.150	—	0.591	—	1.142	M12	1.4	HS-2.5-25
3140 10132105	**-105**	2	1.000	2.402	—	4.134	—	—	3.150	—	0.591	—	1.732	M12	1.6	
3140 10324075	**BT40 -CT0750S -75**	1	0.750	2.047	—	2.953	—	—	2.953	—	0.591	—	—	M12	1.6	HS-2-20
3140 10324090	**-90**	3	0.750	2.047	2.283	3.543	0.709	1.772	3.150	—	0.591	—	—	M12	1.8	
3140 10324105	**-105**	3	0.750	2.047	2.283	4.134	1.299	1.772	3.150	—	0.591	—	—	M12	2.0	
3140 10324120	**-120**	3	0.750	2.047	2.283	4.724	1.890	1.772	3.150	—	0.591	—	—	M12	2.2	
3140 10332090	**BT40 -CT1000S -90**	1	1.000	2.402	—	3.543	—	—	3.150	—	0.591	—	—	M12	2.0	HS-2.5-25
3140 10332105	**-105**	1	1.000	2.402	—	4.134	—	—	3.150	—	0.591	—	—	M12	2.3	
3140 10332120	**-120**	1	1.000	2.402	—	4.724	—	—	3.150	—	0.591	—	—	M12		
3140 10332135	**-135**	1	1.000	2.402	—	5.315	—	—	3.150	—	0.591	—	—	M12		
3140 10340090	**BT40 -CT1250S -90**	2	1.250	2.874	—	3.543	—	—	2.992	1.260	0.669	1.024	1.220	M18	2.3	HS-3-32
3140 10340105	**-105**	2	1.250	2.874	—	4.134	—	—	3.346	0.906	0.669	1.024	1.811	M18	2.6	
3140 10340120	**-120**	2	1.250	2.874	—	4.724	—	—	3.346	0.906	0.669	1.024	2.402	M18	2.9	
3140 10340135	**-135**	2	1.250	2.874	—	5.315	—	—	4.724	—	0.669	1.024	2.992	M18	3.1	
3140 10524090	**BT50 -CT0750S -90**	3	0.750	2.047	2.559	3.543	0.276	1.772	3.150	—	0.591	—	—	M12		HS-2-20
3140 10524105	**-105**	3	0.750	2.047	2.677	4.134	0.866	1.772	3.150	—	0.591	—	—	M12	4.5	
3140 10524135	**-135**	3	0.750	2.047	3.150	5.315	2.047	1.772	3.150	—	0.591	—	—	M12		
3140 10532105	**BT50 -CT1000S -105**	3	1.000	2.402	3.228	4.134	0.433	2.205	3.150	—	0.591	—	—	M12	4.7	HS-2.5-25
3140 10532135	**-135**	3	1.000	2.402	3.268	5.315	1.614	2.205	3.150	—	0.591	—	—	M12		
3140 10532165	**-165**	3	1.000	2.402	3.386	6.496	2.795	2.205	3.150	—	0.591	—	—	M12		

Inch to Metric (mm) → Inch × 25.4
Metric (mm) to Inch → Metric ÷ 25.4 or Metric × 0.03937

Special / Custom Sizes on request

Inch Sizes

Unit : Inch

Code	Model	Type	d	D	D1	L	L1	L2	ℓ	ℓ 1	ℓ 2	d1	L0	G P=1.0	kg	Spanner
3140 10540095	**BT50 -CT1250S -95**	1	1.250	2.874	—	3.740	—	—	4.724	—	0.787	—	—	M18		HS-3-32
3140 10540105	**-105**	3	1.250	2.874	3.386	4.134	0.433	2.205	4.724	—	0.787	—	—	M18	5.0	
3140 10540120	**-120**	3	1.250	2.874	3.425	4.724	1.024	2.205	4.724	—	0.787	—	—	M18		
3140 10540135	**-135**	3	1.250	2.874	3.386	5.315	1.614	2.205	4.724	—	0.787	—	—	M18	6.1	
3140 10540150	**-150**	3	1.250	2.874	3.465	5.906	2.205	2.205	4.724	—	0.787	—	—	M18		
3140 10540165	**-165**	3	1.250	2.874	3.465	6.496	2.795	2.205	4.724	—	0.787	—	—	M18	7.1	
3140 10564105	**BT50 -CT2000S -105**	2	2.000	4.134	—	4.134	—	—	3.937	—	0.787	—	1.654	M18		HS-4V
3140 10564120	**-120**	2	2.000	4.134	—	4.724	—	—	3.937	—	0.787	—	2.244	M18	7.1	
3140 10564135	**-135**	2	2.000	4.134	—	5.315	—	—	3.937	—	0.787	—	2.835	M18		
3140 10564150	**-150**	2	2.000	4.134	—	5.906	—	—	3.937	—	0.787	—	3.425	M18		
3140 10564165	**-165**	2	2.000	4.134	—	6.496	—	—	3.937	—	0.787	—	4.016	M18		

1.Use 2pcs. of M4 × 5（S）hex. screw (included) to close air holes on the holder when internal coolant is used.
2.When ordering, indicate number of spanners required. “No charge” spanners are limited to number of milling chucks on order.
3.Tolerance of cutting tool shank must be h7.

Ordering Example

BT30 - CT 0750 S - 75

Shank size | I.D. (d) | Projection length (L)

Spanner

P. 069



Accessories

Stopper Bolt	Straight Collet		Morse Taper Adapter		Jacobs Adapter	
BL (P.068)	MC (P.066)	MCA (P.067)	MA (P.068)	MAB (P.068)	JA (P.069)	JAB (P.069)

Min. chucking length

Without MC collet *Unit : Metric*

I.D.of Milling Chuck	Min. chucking length
16、20	40
25、32、42	50

With MC collet *Unit : Metric*

Collet I.D.	Min. chucking length	
	MC	MC-C、MC-OH
6、8	30	30
10、12	40	40
16、20	45	45
25	50	50
32	50	60

BT
CAT
AHO
HSK·A/E/F/C
HSK·T
UTS
Specialized Machine
Related Equipment
Bush & Chamfering Drill
Milling Chuck
Collet Holder
"R" Zero Holder
Hydraulic Chuck
Shrink Fit
Tapping Chuck
Arbors
Function Holder
Turning Tool
Retention Stud
Tool Shank Dimensions

CT·S

Super tite-lock Milling Chuck

● Slim design milling chuck. Specially designed slits enable heavy endmilling.



Type1

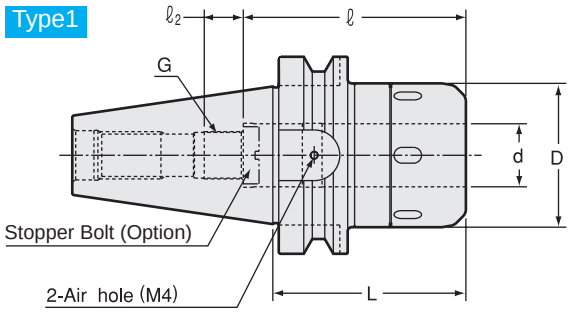

Type2

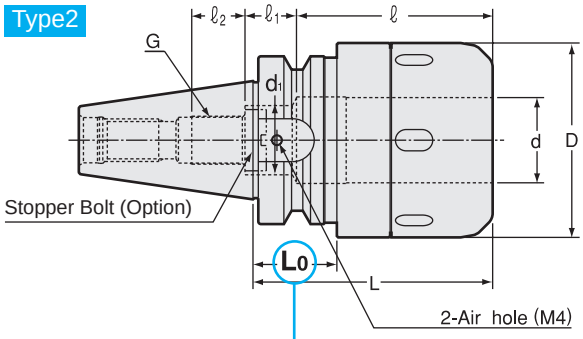

Caution
★ Take caution against A.T.C. arm and tool magazine interference.

Type3

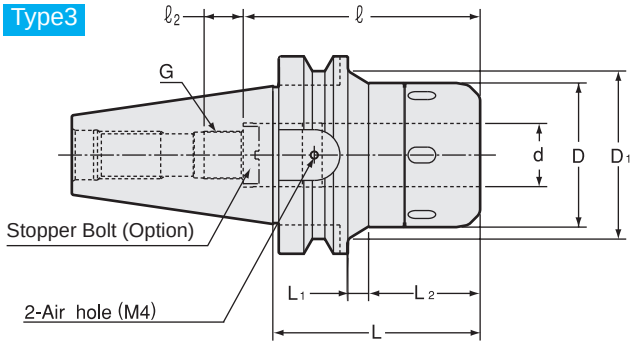

Caution
Please rotate the clamping ring counterclockwise more than 360 degrees after a cutting tool is removed.

Metric Sizes

Unit : Metric

Code	Model	Type	d	D	D1	L	L1	L2	ℓ	ℓ1	ℓ2	d1	L0	G P=1.0	kg	Spanner
3140 00116075	BT30 -CT16S -75	1	16	45	—	75	—	—	65	—	15	—	—	10	0.9	HS-1-16
3140 00116090	-90	1	16	45	—	90	—	—	65	—	15	—	—	10	1.1	
3140 00120075	BT30 -CT20S -75 * 1	2	20	52	—	75	—	—	65	—	15	—	★ 27	12	1.0	HS-2-20
3140 00120090	-90	2	20	52	—	90	—	—	80	—	15	—	42	12	1.2	
3140 00120105	-105	2	20	52	—	105	—	—	80	—	15	—	57	12	1.3	
3140 00125090	BT30 -CT25S -90	2	25	61	—	90	—	—	80	—	15	—	★ 31	12	1.4	HS-2.5-25
3140 00125105	-105	2	25	61	—	105	—	—	80	—	15	—	44	12	1.6	
3140 00132090	BT30 -CT32S -90	2	32	68	—	90	—	—	68	—	20	—	★ 30	18	1.6	HS-3-32
3140 00316075	BT40 -CT16S -75	1	16	45	—	75	—	—	65	—	15	—	—	10	1.4	HS-1-16
3140 00316090	-90	1	16	45	—	90	—	—	65	—	15	—	—	10	1.6	
3140 00320075	BT40 -CT20S -75	1	20	52	—	75	—	—	75	—	15	—	—	12	1.5	HS-2-20
3140 00320090	-90	1	20	52	—	90	—	—	80	—	15	—	—	12	1.8	
3140 00320105	-105	1	20	52	—	105	—	—	80	—	15	—	—	12	2.1	
3140 00320120	-120	1	20	52	—	120	—	—	80	—	15	—	—	12	2.3	
3140 00325090	BT40 -CT25S -90	1	25	61	—	90	—	—	80	—	15	—	—	12	2.0	HS-2.5-25
3140 00325105	-105	1	25	61	—	105	—	—	80	—	15	—	—	12	2.3	
3140 00325120	-120	1	25	61	—	120	—	—	80	—	15	—	—	12	2.7	
3140 00325135	-135	1	25	61	—	135	—	—	80	—	15	—	—	12	3.0	
3140 00332090	BT40 -CT32S -90 * 2	2	32	73	—	90	—	—	76	32	17	26	★ 31	18	2.3	HS-3-32
3140 00332105	-105 * 3	2	32	73	—	105	—	—	85	23	17	26	46	18	2.5	
3140 00332120	-120 * 3	2	32	73	—	120	—	—	85	23	17	26	61	18	2.9	
3140 00332135	-135	2	32	73	—	135	—	—	120	—	17	26	76	18	3.2	

Inch to Metric (mm) → Inch × 25.4
Metric (mm) to Inch → Metric ÷ 25.4 or Metric × 0.03937

Special / Custom Sizes on request

Metric Sizes

Unit : Metric

Code	Model	Type	d	D	D1	L	L1	L2	ℓ	ℓ1	ℓ2	d1	L0	G P=1.0	kg	Spanner
3140 00516090	BT50 -CT16S -90	3	16	45	58	90	7	45	65	—	20	—	—	10	4.1	HS-1-16
3140 00516105	-105	3	16	45	70	105	22	45	65	—	20	—	—	10	4.4	
3140 00516135	-135	3	16	45	70	135	37	45	65	—	20	—	—	10	5.0	
3140 00520090	BT50 -CT20S -90	3	20	52	65	90	7	45	80	—	15	—	—	12	4.2	HS-2-20
3140 00520105	-105	3	20	52	70	105	9	58	80	—	15	—	—	12	4.5	
3140 00520120	-120	3	20	52	70	120	24	58	80	—	15	—	—	12	4.9	
3140 00520135	-135	3	20	52	73	135	39	58	80	—	15	—	—	12	5.4	
3140 00520165	-165	3	20	52	73	165	69	58	80	—	15	—	—	12	6.1	
3140 00520200	-200	3	20	52	73	200	104	58	80	—	15	—	—	12	6.8	
3140 00520250	-250	3	20	52	73	250	154	58	80	—	15	—	—	12	7.9	
3140 00520300	-300	3	20	52	73	300	204	58	80	—	15	—	—	12	9.3	
3140 00525105	BT50 -CT25S -105	3	25	61	82	105	11	56	80	—	15	—	—	12	4.8	HS-2.5-25
3140 00525120	-120	3	25	61	82	120	26	56	80	—	15	—	—	12	5.2	
3140 00525135	-135	3	25	61	83	135	41	56	80	—	15	—	—	12	5.7	
3140 00525165	-165	3	25	61	86	165	71	56	80	—	15	—	—	12	6.6	
3140 00525200	-200	3	25	61	86	200	106	56	80	—	15	—	—	12	7.7	
3140 00525250	-250	3	25	61	86	250	156	56	80	—	15	—	—	12	9.2	
3140 00525300	-300	3	25	61	86	300	206	56	80	—	15	—	—	12	10.8	
3140 00532095	BT50 -CT32S -95	1	32	73	—	95	—	—	120	—	20	—	—	18	4.6	HS-3-32
3140 00532105	-105	1	32	73	—	105	—	—	120	—	20	—	—	18	4.9	
3140 00532120	-120	3	32	73	87	120	26	56	120	—	20	—	—	18	5.6	
3140 00532135	-135	3	32	73	88	135	41	56	120	—	20	—	—	18	6.2	
3140 00532150	-150	3	32	73	87	150	56	56	120	—	20	—	—	18	6.7	
3140 00532165	-165	3	32	73	86	165	71	56	120	—	20	—	—	18	7.2	
3140 00532200	-200	3	32	73	88	200	106	56	120	—	20	—	—	18	8.6	
3140 00532250	-250	3	32	73	88	250	156	56	120	—	20	—	—	18	10.5	
3140 00532300	-300	3	32	73	88	300	206	56	120	—	20	—	—	18	12.4	
3140 00542095	BT50 -CT42S -95 ＊4	1	42	88	—	95	—	—	120	—	20	—	—	18	5.0	HS-4-42
3140 00542105	-105 ＊4	1	42	88	—	105	—	—	120	—	20	—	—	18	5.4	
3140 00542120	-120	1	42	88	—	120	—	—	120	—	20	—	—	18	6.1	
3140 00542135	-135	1	42	88	—	135	—	—	120	—	20	—	—	18	6.8	
3140 00542150	-150	1	42	88	—	150	—	—	120	—	20	—	—	18	7.4	
3140 00542165	-165	1	42	88	—	165	—	—	120	—	20	—	—	18	8.1	
3140 00542200	-200	1	42	88	—	200	—	—	120	—	20	—	—	18	9.7	
3140 00542250	-250	1	42	88	—	250	—	—	120	—	20	—	—	18	12.0	
3140 00542300	-300	1	42	88	—	300	—	—	120	—	20	—	—	18	14.2	

1.Use 2pcs. of M4 × 5（S） hex. screw (included) to close air holes on the holder when internal coolant is used.
2.When ordering, indicate number of spanners required. “No charge” spanners are limited to number of milling chucks on order.
3.Tolerance of cutting tool shank must be h7.

Ordering Example

BT30 - CT 16 S - 75

BT30: Shank size; 16: I.D. (d); 75: Projection length (L)

Spanner
P. 069



Accessories

Models with ＊1 - ＊4 cannot be used with some accessories due to short ℓ length.

	Stopper Bolt BL (P.068)	Straight Collet MC (P.066)	Straight Collet MCA (P.067)	Morse Taper Adapter MA (P.068)	Morse Taper Adapter MAB (P.068)	Jacobs Adapter JA (P.069)	Jacobs Adapter JAB (P.069)
＊1	Yes	Yes	No	No	No	No	No
＊2	Yes	Yes	No	No	Yes	No	Yes
＊3	Yes	Yes	Yes	No	Yes	No	Yes
＊4	Yes	Yes	No	Yes	Yes	Yes	Yes

Min. chucking length

Without MC collet — Unit : Metric

I.D.of Milling Chuck	Min. chucking length
16、20	40
25、32、42	50

With MC collet — Unit : Metric

Collet I.D.	Min. chucking length	
	MC	MC-C、MC-OH
6、8	30	30
10、12	40	40
16、20	45	45
25	50	50
32	50	60

Inch to Metric (mm) → Inch × 25.4
Metric (mm) to Inch → Metric ÷ 25.4 or Metric × 0.03937

Special / Custom Sizes on request

CT·S-E

Super Tite-Lock Milling Chuck (High-Balanced Type)

● Slim design milling chuck. Specially designed slits enables heavy end milling. (High balanced type for higher RPM)



Type1

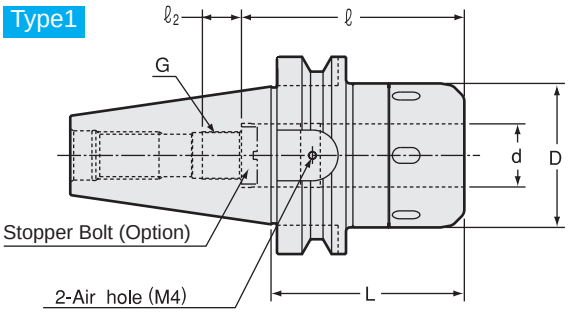

Type2

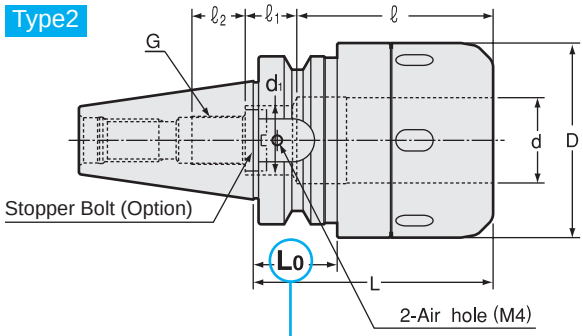

Caution
★ Take caution against A.T.C. arm and tool magazine interference.

Type3

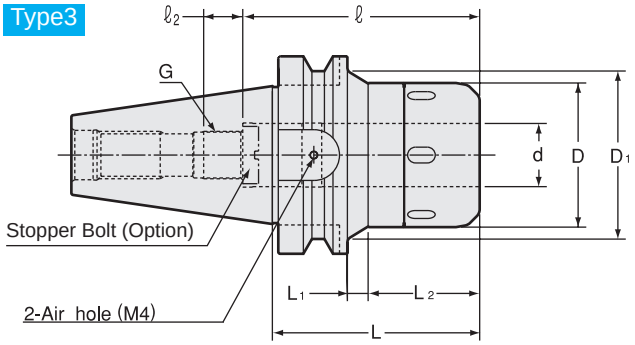

Caution
Please rotate the clamping ring counterclockwise more than 360 degrees after a cutting tool is removed.

Metric Sizes

Unit : Metric

Code	Model	Type	d	D	D1	L	L1	L2	ℓ	ℓ1	ℓ2	d1	L0	G P = 1.0	kg	Spanner
3140 20116075	BT30 -CT16S -75E	1	16	45	—	75	—	—	65	—	15	—	—	10	0.9	HS-1-16
3140 20116090	-90E	1	16	45	—	90	—	—	65	—	15	—	—	10	1.1	
3140 20120075	BT30 -CT20S -75E ＊1	2	20	52	—	75	—	—	65	—	15	—	★ 27	12	1.0	HS-2-20
3140 20120090	-90E	2	20	52	—	90	—	—	80	—	15	—	42	12	1.2	
3140 20120105	-105E	2	20	52	—	105	—	—	80	—	15	—	57	12	1.3	
3140 20125090	BT30 -CT25S -90E	2	25	61	—	90	—	—	80	—	15	—	★ 31	12	1.4	HS-2.5-25
3140 20125105	-105E	2	25	61	—	105	—	—	80	—	15	—	44	12	1.6	
3140 20316075	BT40 -CT16S -75E	1	16	45	—	75	—	—	65	—	15	—	—	10	1.4	HS-1-16
3140 20316090	-90E	1	16	45	—	90	—	—	65	—	15	—	—	10	1.6	
3140 20320075	BT40 -CT20S -75E	1	20	52	—	75	—	—	75	—	15	—	—	15	1.5	HS-2-20
3140 20320090	-90E	1	20	52	—	90	—	—	80	—	15	—	—	15	1.8	
3140 20320105	-105E	1	20	52	—	105	—	—	80	—	15	—	—	15	2.1	
3140 20320120	-120E	1	20	52	—	120	—	—	80	—	15	—	—	15	2.2	
3140 20325090	BT40 -CT25S -90E	1	25	61	—	90	—	—	80	—	15	—	—	15	2.0	HS-2.5-25
3140 20325105	-105E	1	25	61	—	105	—	—	80	—	15	—	—	15	2.3	
3140 20325120	-120E	1	25	61	—	120	—	—	80	—	15	—	—	15	2.7	
3140 20325135	-135E	1	25	61	—	135	—	—	80	—	15	—	—	15	3.0	
3140 20332090	BT40 -CT32S -90E ＊2	2	32	73	—	90	—	—	76	32	17	26	★ 31	18	2.3	HS-3-32
3140 20332105	-105E ＊3	2	32	73	—	105	—	—	85	23	17	26	46	18	2.6	
3140 20332120	-120E ＊3	2	32	73	—	120	—	—	85	23	17	26	61	18	2.9	
3140 20332135	-135E	2	32	73	—	135	—	—	120	—	17	26	76	18	3.1	

Inch to Metric (mm) → Inch × 25.4
Metric (mm) to Inch → Metric ÷ 25.4 or Metric × 0.03937

Special / Custom Sizes on request

Metric Sizes

Unit : Metric

Code	Model	Type	d	D	D1	L	L1	L2	ℓ	ℓ1	ℓ2	d1	L0	G P = 1.0	kg	Spanner
3140 20516090	BT50 -CT16S -90E	3	16	45	58	90	7	45	65	—	20	—	—	10	4.1	HS-1-16
3140 20516105	-105E	3	16	45	70	105	22	45	65	—	20	—	—	10	4.4	
3140 20520090	BT50 -CT20S -90E	3	20	52	65	90	7	45	80	—	15	—	—	12	4.2	HS-2-20
3140 20520105	-105E	3	20	52	70	105	9	58	80	—	15	—	—	12	4.5	
3140 20520120	-120E	3	20	52	70	120	24	58	80	—	15	—	—	12	4.7	
3140 20520135	-135E	3	20	52	73	135	39	58	80	—	15	—	—	12	5.3	
3140 20525105	BT50 -CT25S -105E	3	25	61	82	105	11	56	80	—	15	—	—	12	4.8	HS-2.5-25
3140 20525120	-120E	3	25	61	82	120	26	56	80	—	15	—	—	12	5.2	
3140 20525135	-135E	3	25	61	83	135	41	56	80	—	15	—	—	12	5.6	
3140 20525165	-165E	3	25	61	86	165	71	56	80	—	15	—	—	12	6.6	
3140 20532095	BT50 -CT32S -95E	1	32	73	—	95	—	—	120	—	20	—	—	18	4.6	HS-3-32
3140 20532105	-105E	1	32	73	—	105	—	—	120	—	20	—	—	18	4.9	
3140 20532120	-120E	3	32	73	87	120	26	56	120	—	20	—	—	18	5.6	
3140 20532135	-135E	3	32	73	88	135	41	56	120	—	20	—	—	18	6.1	
3140 20532150	-150E	3	32	73	87	150	56	56	120	—	20	—	—	18	6.7	
3140 20532165	-165E	3	32	73	86	165	71	56	120	—	20	—	—	18	7.1	
3140 20542095	BT50 -CT42S -95E ＊4	1	42	88	—	95	—	—	120	—	20	—	—	18	4.9	HS-4-42
3140 20542105	-105E ＊4	1	42	88	—	105	—	—	120	—	20	—	—	18	5.4	
3140 20542120	-120E	1	42	88	—	120	—	—	120	—	20	—	—	18	6.0	
3140 20542135	-135E	1	42	88	—	135	—	—	120	—	20	—	—	18	6.7	
3140 20542150	-150E	1	42	88	—	150	—	—	120	—	20	—	—	18	7.4	
3140 20542165	-165E	1	42	88	—	165	—	—	120	—	20	—	—	18	8.0	

1.Use 2pcs. of M4 × 5（S） hex. screw (included) to close air holes on the holder when internal coolant is used.
2.When ordering, indicate number of spanners required. “No charge” spanners are limited to number of milling chucks on order.
3.Tolerance of cutting tool shank must be h7.

Ordering Example

BT30 - CT 16 S - 75 E

BT30: Shank size; 16: I.D. (d); 75: Projection length (L)

Spanner
P. 069



Accessories

Models with ＊1 - ＊4 cannot be used with some accessories due to short ℓ length.

	Stopper Bolt	Straight Collet		Morse Taper Adapter		Jacobs Adapter	
	BL (P.068)	MC (P.066)	MCA (P.067)	MA (P.068)	MAB (P.068)	JA (P.069)	JAB (P.069)
＊1	Yes	Yes	No	No	No	No	No
＊2	Yes	Yes	No	No	Yes	No	Yes
＊3	Yes	Yes	Yes	No	Yes	No	Yes
＊4	Yes	Yes	No	Yes	Yes	Yes	Yes

Min. chucking length

Without MC collet

I.D.of Milling Chuck	Min. chucking length
16、20	40
25、32、42	50

With MC collet

Collet I.D.	Min. chucking length	
	MC	MC-C、MC-OH
6、8	30	30
10、12	40	40
16、20	45	45
25	50	50
32	50	60

Inch to Metric (mm) → Inch × 25.4
Metric (mm) to Inch → Metric ÷ 25.4 or Metric × 0.03937

Special / Custom Sizes on request

CT·S-CF

Super Tite-Lock Milling Chuck (Flange Through Type)

● Flange through coolant type millimg chuck. DIN69871 Form B compliance.

Type1

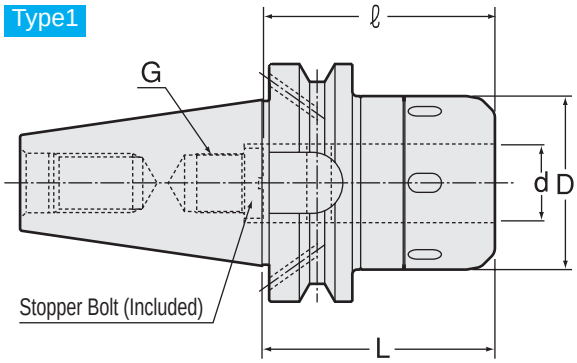

Type2

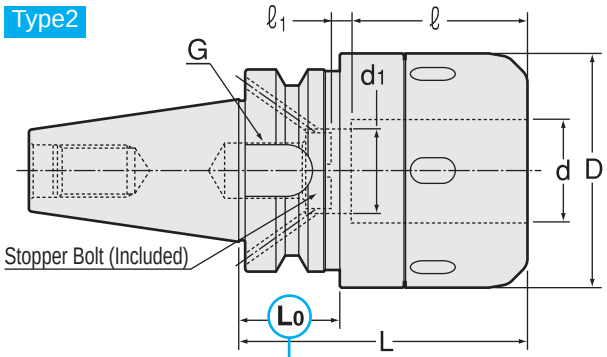

⚠ Caution
★ Take caution against A.T.C. arm and tool magazine interference.

Type3

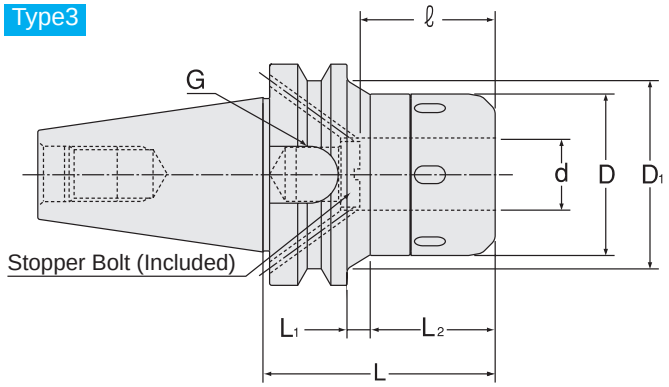

Caution
Please rotate the clamping ring counterclockwise more than 360 degrees after a cutting tool is removed.

● DIN69871 Form B
● Max. Coolant pressure：7MPa

Metric Sizes

Unit : Metric

Code	Model	Type	d	D	D1	L	L1	L2	ℓ	ℓ1	d1	L0	G P = 1.0	Spanner
3146 00316075	BT40 -CT16S -75CF	1	16	45	—	75	—	—	60	—	—	—	10	HS-1-16
3146 00316090	-90CF	1	16	45	—	90	—	—	60	—	—	—	10	
3146 00320075	BT40 -CT20S -75CF	1	20	52	—	75	—	—	65	—	—	—	12	HS-2-20
3146 00320090	-90CF	1	20	52	—	90	—	—	75	—	—	—	12	
3146 00320105	-105CF	1	20	52	—	105	—	—	75	—	—	—	12	
3146 00320120	-120CF	1	20	52	—	120	—	—	75	—	—	—	12	
3146 00325090	BT40 -CT25S -90CF	1	25	61	—	90	—	—	75	—	—	—	12	HS-2.5-25
3146 00325105	-105CF	1	25	61	—	105	—	—	75	—	—	—	12	
3146 00325120	-120CF	1	25	61	—	120	—	—	75	—	—	—	12	
3146 00325135	-135CF	1	25	61	—	135	—	—	75	—	—	—	12	
3146 00332090	BT40 -CT32S -90CF	2	32	73	—	90	—	—	70	—	—	★ 31	18	HS-3-32
3146 00332105	-105CF	2	32	73	—	105	—	—	75	—	—	46	18	
3146 00332120	-120CF	2	32	73	—	120	—	—	85	5	26	61	18	
3146 00332135	-135CF	2	32	73	—	135	—	—	90	13	26	76	18	
3146 00516090	BT50 -CT16S -90CF	3	16	45	58	90	7	45	65	—	—	—	10	HS-1-16
3146 00516105	-105CF	3	16	45	70	105	22	45	60	—	—	—	10	
3146 00520090	BT50 -CT20S -90CF	3	20	52	65	90	7	45	80	—	—	—	12	HS-2-20
3146 00520105	-105CF	3	20	52	70	105	9	58	80	—	—	—	12	
3146 00520120	-120CF	3	20	52	70	120	24	58	80	—	—	—	12	
3146 00520135	-135CF	3	20	52	73	135	39	58	80	—	—	—	12	
3146 00525105	BT50 -CT25S -105CF	3	25	61	82	105	11	56	80	—	—	—	12	HS-2.5-25
3146 00525120	-120CF	3	25	61	82	120	26	56	80	—	—	—	12	
3146 00525135	-135CF	3	25	61	83	135	41	56	80	—	—	—	12	
3146 00525165	-165CF	3	25	61	86	165	71	56	80	—	—	—	12	

Inch to Metric (mm) → Inch × 25.4
Metric (mm) to Inch → Metric ÷ 25.4 or Metric × 0.03937

Special / Custom Sizes on request

Metric Sizes

Unit : Metric

Code	Model	Type	d	D	D1	L	L1	L2	ℓ	ℓ1	d1	L0	G P = 1.0	Spanner
3146 00532095	BT50 -CT32S -95CF	1	32	73	—	95	—	—	90	—	—	—	18	HS-3-32
3146 00532105	-105CF	1	32	73	—	105	—	—	90	—	—	—	18	
3146 00532120	-120CF	3	32	73	87	120	26	56	90	—	—	—	18	
3146 00532135	-135CF	3	32	73	88	135	41	56	90	—	—	—	18	
3146 00532150	-150CF	3	32	73	87	150	56	56	90	—	—	—	18	
3146 00532165	-165CF	3	32	73	86	165	71	56	90	—	—	—	18	
3146 00542095	BT50 -CT42S -95CF	1	42	88	—	95	—	—	90	—	—	—	18	HS-4-42
3146 00542105	-105CF	1	42	88	—	105	—	—	90	—	—	—	18	
3146 00542120	-120CF	1	42	88	—	120	—	—	90	—	—	—	18	
3146 00542135	-135CF	1	42	88	—	135	—	—	90	—	—	—	18	
3146 00542150	-150CF	1	42	88	—	150	—	—	90	—	—	—	18	
3146 00542165	-165CF	1	42	88	—	165	—	—	90	—	—	—	18	

1.When ordering, indicate number of spanners required. “No charge” spanners are limited to number of milling chucks on order.
2.Tolerance of cutting tool shank must be h7.
3.Stopper bolt (type BL) is included.
4.Only MC-C or MC-OH collet can be used.

Min. chucking length

Without MC collet

I.D.of Milling Chuck	Min. chucking length
16、20	40
25、32、42	50

With MC collet

Collet I.D.	Min. chucking length	
	MC	MC-C、MC-OH
6、8	30	30
10、12	40	40
16、20	45	45
25	50	50
32	50	60

MC-OH, MC-C Collet
P. 066-067

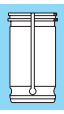

Spanner
P. 069



Ordering Example

BT30 - CT 16 S - 75 CF

Shank size | I.D. (d) | Projection length (L)

Inch to Metric (mm) → Inch × 25.4
Metric (mm) to Inch → Metric ÷ 25.4 or Metric × 0.03937

Special / Custom Sizes on request

NT-CT·S

Super Tite-Lock Milling Chuck

● Slim design milling chuck. Specially designed slits enable heavy endmilling.

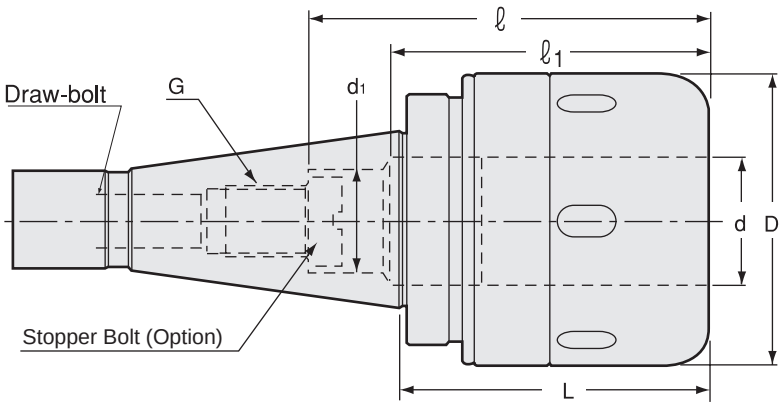

Caution
Please rotate the clamping ring counterclockwise more than 360 degrees after a cutting tool is removed.

Metric Sizes

Unit : Metric

Code	Model	d	D	L	ℓ	ℓ1	d1	G P=1.0	Draw-bolt	Spanner
3140 01120070	NT30 -CT20S -70 (U)	20	52	70	80	—	—	M12	U1/2-13	HS-2-20
3140 02120070	-70 (M)	20	52	70	80	—	—	M12	M12 P=1.75	
3140 03120070	-70 (W)	20	52	70	80	—	—	M12	W1/2-12	
3140 01320070	NT40 -CT20S -70 (U)	20	52	70	80	—	—	M12	U5/8-11	HS-2-20
3140 02320070	-70 (M)	20	52	70	80	—	—	M12	M16 P=2	
3140 01332075	NT40 -CT32S -75 (U) ＊1	32	73	75	108	76	26	M18	U5/8-11	HS-3-32
3140 02332075	-75 (M) ＊1	32	73	75	108	76	26	M18	M16 P=2	
3140 01532085	NT50 -CT32S -85 (U)	32	73	85	120	—	—	M18	U1-8	HS-3-32
3140 02532085	-85 (M)	32	73	85	120	—	—	M18	M24 P=3	
3140 01542085	NT50 -CT42S -85 (U)	42	88	85	120	—	—	M18	U1-8	HS-4-42
3140 02542085	-85 (M)	42	88	85	120	—	—	M18	M24 P=3	

1.When ordering, indicate number of spanners required. “No charge” spanners are limited to number of milling chucks on order.
2.Tolerance of cutting tool shank must be h7.

Ordering Example

NT40 - CT 32 S - 75 (U)
Shank size | I.D. (d) | Projection length (L) | Draw-bolt

Spanner
P. 069



Accessories

Models with ＊1 cannot be used with some accessories due to short ℓ length.

	Stopper Bolt BL (P.068)	Straight Collet MC (P.066)	Straight Collet MCA (P.067)	Morse Taper Adapter MA (P.068)	Morse Taper Adapter MAB (P.068)	Jacobs Adapter JA (P.069)	Jacobs Adapter JAB (P.069)
＊1	Yes	Yes	Yes	No	Yes	No	Yes

Min. chucking length

Without MC collet

I.D.of Milling Chuck	Min. chucking length
20	40
25、32、42	50

With MC collet

Collet I.D.	Min. chucking length	
	MC	MC-C、MC-OH
6、8	30	30
10、12	40	40
16、20	45	45
25	50	50
32	50	60

Inch to Metric (mm) → Inch × 25.4
Metric (mm) to Inch → Metric ÷ 25.4 or Metric × 0.03937

Special / Custom Sizes on request

MEMO

CT·A

Tite-Lock Milling Chuck

● Slim design milling chuck. Clicking sound tells completion of clamping.

Type1

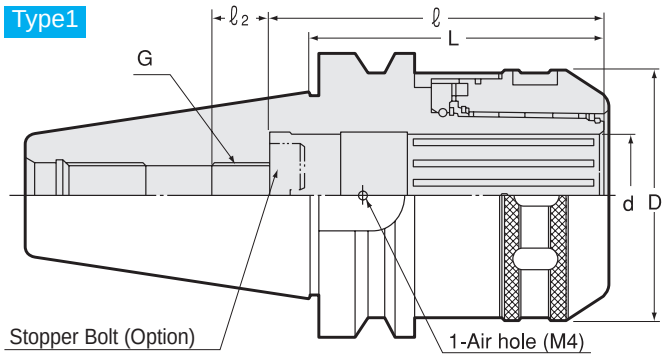

Type2

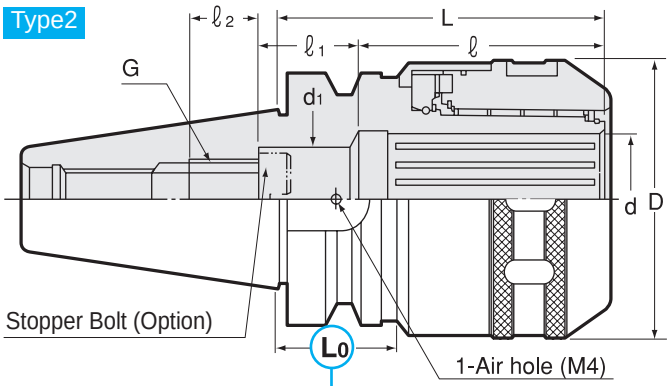

Type3

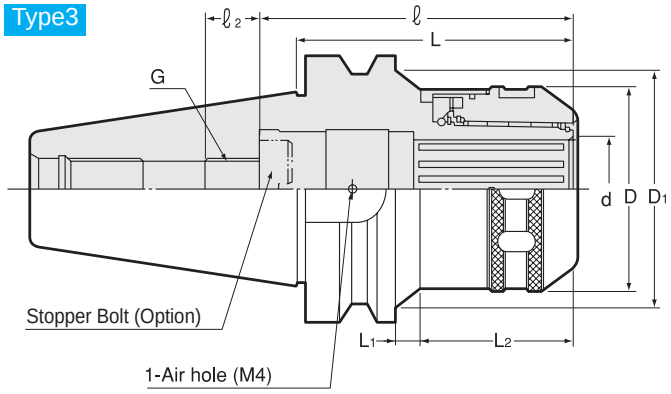

⚠ Caution
★ Take caution against A.T.C. arm and tool magazine interference.

Caution
Please rotate the clamping ring counterclockwise more than 360 degrees after a cutting tool is removed.

Metric Sizes

Unit : Metric

Code	Model	Type	d	D	D1	L	ℓ	ℓ1	d1	L0	P = 1.0 G	ℓ2	L1	L2	kg	Spanner
0710 00116075	BT30 -CT16A -75	1	16	45	—	75	65	—	—	—	10	15	—	—	0.9	HS-1-16
0710 00116090	-90	1	16	45	—	90	65	—	—	—	10	15	—	—	1.1	
0710 00120090	BT30 -CT20A -90	2	20	52	—	90	80	—	—	★ 32	12	15	—	—	1.1	HS-2-20
0710 00120105	-105	2	20	52	—	105	80	—	—	47	12	15	—	—	1.3	
0710 00125090	BT30 -CT25A -90	2	25	61	—	90	80	—	—	★ 32	12	15	—	—	1.3	HS-2.5-25
0710 00125105	-105	2	25	61	—	105	80	—	—	★ 37	12	15	—	—	1.6	
0710 00316075	BT40 -CT16A -75	3	16	45	48	75	65	—	—	—	10	15	2	46	1.4	HS-1-16
0710 00320090	BT40 -CT20A -90	3	20	52	55	90	80	—	—	—	12	15	6	57	1.7	HS-2-20
0710 00320105	-105	3	20	52	55	105	80	—	—	—	12	15	21	57	1.9	
0710 00320120	-120	3	20	52	58	120	80	—	—	—	12	15	36	57	2.2	
0710 00325090	BT40 -CT25A -90	1	25	61	—	90	80	—	—	—	12	15	—	—	1.9	HS-2.5-25
0710 00325105	-105	1	25	61	—	105	80	—	—	—	12	15	—	—	2.2	
0710 00325135	-135	1	25	61	—	135	80	—	—	—	12	15	—	—	2.9	
0710 00332090	BT40 -CT32A -90 ✳ 1	2	32	73	—	90	76	32	26	★ 27	18	17	—	—	2.2	HS-3-32
0710 00332105	-105 ✳ 2	2	32	73	—	105	85	23	26	42	18	17	—	—	2.5	
0710 00332120	-120 ✳ 2	2	32	73	—	120	85	23	26	57	18	17	—	—	2.9	
0710 00332135	-135	2	32	73	—	135	120	—	—	72	18	17	—	—	3.1	
0710 00516090	BT50 -CT16A -90	3	16	45	56	90	65	—	—	—	10	20	6	46	4.0	HS-1-16
0710 00516105	-105	3	16	45	69	105	65	—	—	—	10	20	21	46	4.3	
0710 00520105	BT50 -CT20A -105	3	20	52	71	105	80	—	—	—	12	15	10	57	4.4	HS-2-20
0710 00520135	-135	3	20	52	73	135	80	—	—	—	12	15	40	57	5.0	
0710 00525105	BT50 -CT25A -105	3	25	61	79	105	80	—	—	—	12	15	9	58	4.7	HS-2.5-25
0710 00525135	-135	3	25	61	85	135	80	—	—	—	12	15	39	58	5.6	
0710 00525165	-165	3	25	61	83	165	80	—	—	—	12	15	69	58	6.4	

Inch to Metric (mm) → Inch × 25.4
Metric (mm) to Inch → Metric ÷ 25.4 or Metric × 0.03937

Special / Custom Sizes on request

Metric Sizes

Unit : Metric

Code	Model	Type	d	D	D1	L	ℓ	ℓ1	d1	L0	P = G 1.0	ℓ2	L1	L2	kg	Spanner
0710 00532105	BT50 -CT32A -105	3	32	73	75	105	120	—	—	—	18	20	2	65	4.8	HS-3-32
0710 00532120	-120	3	32	73	85	120	120	—	—	—	18	20	17	65	5.4	
0710 00532135	-135	3	32	73	84	135	120	—	—	—	18	20	32	65	5.9	
0710 00532150	-150	3	32	73	89	150	120	—	—	—	18	20	47	65	6.5	
0710 00532165	-165	3	32	73	88	165	120	—	—	—	18	20	62	65	7.0	
0710 00542105	BT50 -CT42A -105 ＊3	1	42	88	—	105	120	—	—	—	18	20	—	—	5.2	HS-4-42
0710 00542120	-120	1	42	88	—	120	120	—	—	—	18	20	—	—	5.8	
0710 00542135	-135	1	42	88	—	135	120	—	—	—	18	20	—	—	6.5	
0710 00542150	-150	1	42	88	—	150	120	—	—	—	18	20	—	—	7.1	
0710 00542165	-165	1	42	88	—	165	120	—	—	—	18	20	—	—	7.8	

1.Use 1pcs. of M4 × 5（S） hex. screw (included) to close air hole on the holder when internal coolant is used.
2.When ordering, indicate number of spanners required. “No charge” spanners are limited to number of milling chucks on order.
3.Tolerance of cutting tool shank must be h7.

Ordering Example

BT30 - CT 16 A - 75

Shank size | I.D. (d) | Projection length (L)

Spanner

P. 069



Accessories

Models with ＊1 - ＊3 cannot be used with some accessories due to short ℓ length.

	Stopper Bolt	Straight Collet		Morse Taper Adapter		Jacobs Adapter	
	BL (P.068)	MC (P.066)	MCA (P.067)	MA (P.068)	MAB (P.068)	JA (P.069)	JAB (P.069)
＊1	Yes	Yes	No	No	Yes	No	Yes
＊2	Yes	Yes	Yes	No	Yes	No	Yes
＊3	Yes	Yes	No	Yes	Yes	Yes	Yes

Min. chucking length

Without MC collet

I.D.of Milling Chuck	Min. chucking length
16	40
20、25	45
32、42	60

With MC collet

Collet I.D.	Min. chucking length
6、8	30
10、12	40
16、20	45
25	55
32	60

CT·A-CF

Tite-Lock Milling Chuck (Flange Through Type)

● Flange through coolant type milling chuck.DIN69871 Form B compliance.

Type1

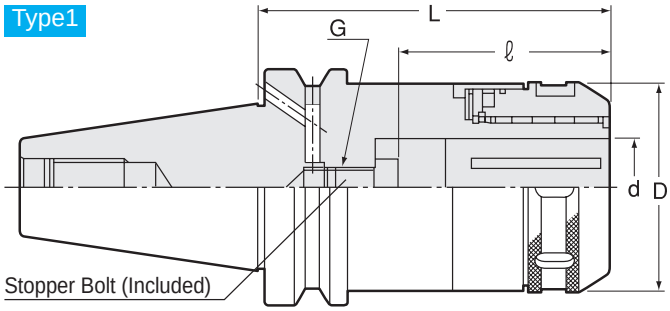

Type2

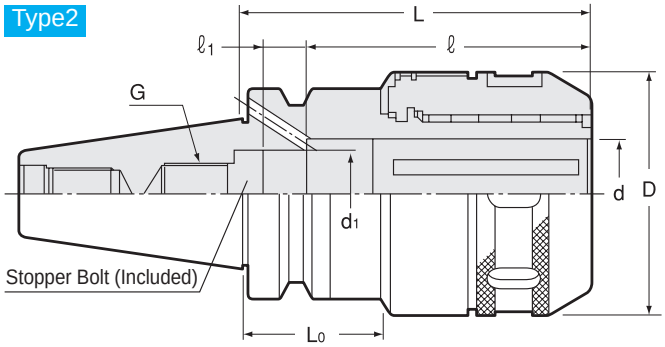

Type3

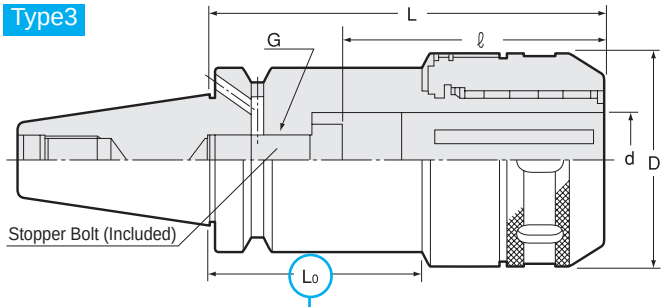

Caution

Please rotate the clamping ring counterclockwise more than 360 degrees after a cutting tool is removed.

● DIN69871 Form B
● Max. Coolant pressure：7MPa

⚠ Caution

★ Take caution against A.T.C. arm and tool magazine interference.

Metric Sizes

Unit : Metric

Code	Model	Type	d	D	L	ℓ	ℓ1	d1	L0	G P=1.0	kg	Spanner
0716 00316075	BT40 -CT16A -75CF	1	16	45	75	60	—	—	—	M10	1.4	HS-1-16
0716 00320090	BT40 -CT20A -90CF	1	20	52	90	75	—	—	—	M12	1.7	HS-2-20
0716 00320105	-105CF	1	20	52	105	75	—	—	—	M12	2.0	
0716 00320120	-120CF	1	20	52	120	75	—	—	—	M12	2.3	
0716 00325090	BT40 -CT25A -90CF	1	25	61	90	75	—	—	—	M12	2.0	HS-2.5-25
0716 00325105	-105CF	1	25	61	105	75	—	—	—	M12	2.3	
0716 00325135	-135CF	1	25	61	135	75	—	—	—	M12	3.0	
0716 00332090	BT40 -CT32A -90CF	3	32	73	90	70	—	—	★ 27	M18	2.4	HS-3-32
0716 00332105	-105CF	3	32	73	105	75	—	—	42	M18	2.7	
0716 00332120	-120CF	2	32	73	120	85	5	26	57	M18	3.0	
0716 00332135	-135CF	2	32	73	135	90	13	26	72	M18	3.3	
0716 00516090	BT50 -CT16A -90CF	1	16	45	90	65	—	—	—	M10	4.0	HS-1-16
0716 00516105	-105CF	1	16	45	105	60	—	—	—	M10	4.5	
0716 00520105	BT50 -CT20A -105CF	1	20	52	105	80	—	—	—	M12	4.5	HS-2-20
0716 00520135	-135CF	1	20	52	135	75	—	—	—	M12	5.1	
0716 00525105	BT50 -CT25A -105CF	1	25	61	105	80	—	—	—	M12	4.8	HS-2.5-25
0716 00525135	-135CF	1	25	61	135	75	—	—	—	M12	5.8	
0716 00525165	-165CF	1	25	61	165	75	—	—	—	M12	6.0	
0716 00532105	BT50 -CT32A -105CF	1	32	73	105	90	—	—	—	M18	5.0	HS-3-32
0716 00532120	-120CF	1	32	73	120	90	—	—	—	M18	5.2	
0716 00532135	-135CF	1	32	73	135	90	—	—	—	M18	6.1	
0716 00532150	-150CF	1	32	73	150	90	—	—	—	M18	6.4	
0716 00532165	-165CF	1	32	73	165	90	—	—	—	M18	7.4	

Inch to Metric (mm) → Inch × 25.4
Metric (mm) to Inch → Metric ÷ 25.4 or Metric × 0.03937

Special / Custom Sizes on request

Metric Sizes

Unit : Metric

Code	Model	Type	d	D	L	ℓ	ℓ1	d1	L0	G P=1.0	kg	Spanner
0716 00542105	BT50 -CT42A -105CF	1	42	88	105	90	—	—	—	M18	5.5	
0716 00542120	-120CF	1	42	88	120	90	—	—	—	M18	5.8	
0716 00542135	-135CF	1	42	88	135	90	—	—	—	M18	6.9	HS-4-42
0716 00542150	-150CF	1	42	88	150	90	—	—	—	M18	7.5	
0716 00542165	-165CF	1	42	88	165	90	—	—	—	M18	7.9	

1.When ordering, indicate number of spanners required. “No charge” spanners are limited to number of milling chucks on order.
2.Tolerance of cutting tool shank must be h7.
3.Stopper bolt (type BL) is included.
4.Accessories cannot be used except for MC-C and MC-OH.

Min. chucking length

Without MC collet

I.D.of Milling Chuck	Min. chucking length
16	40
20、25	45
32	60

With MC collet

Collet I.D.	Min. chucking length
6、8	30
10、12	40
16、20	45
25	55

MC-OH, MC-C Collet
P. 066-067

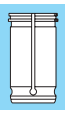

Spanner
P. 069



Ordering Example

BT40 - CT 32 A - 105 CF

- BT40: Shank size
- 32: I.D. (d)
- 105: Projection length (L)

Inch to Metric (mm) → Inch × 25.4
Metric (mm) to Inch → Metric ÷ 25.4 or Metric × 0.03937

Special / Custom Sizes on request

NT-CT·A

Tite-Lock Milling Chuck

● Slim design milling chuck. Clicking sound tells completion of clamping.

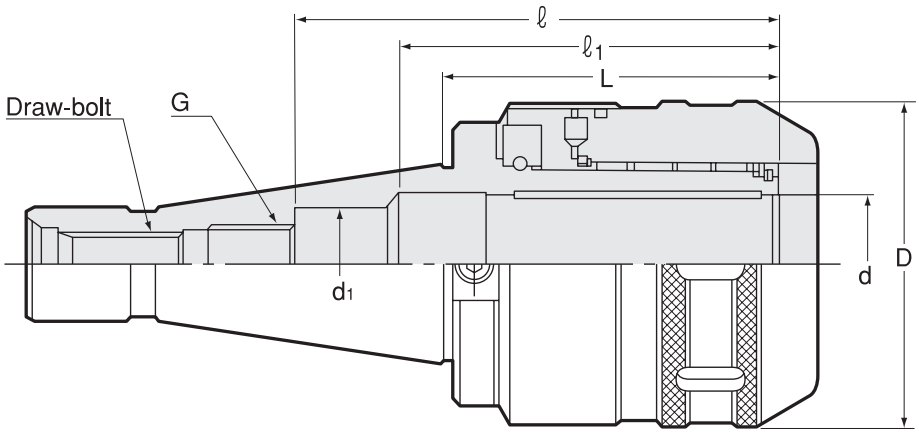

Caution

Please rotate the clamping ring counterclockwise more than 360 degrees after a cutting tool is removed.

Metric Sizes

Unit : Metric

Code	Model	d	D	L	ℓ	ℓ1	d1	G P=1.0	Draw-bolt	kg	Spanner
0710 01120070	NT30 -CT20A -70 (W)	20	52	70	80	—	—	M12	W1/2-12	1.0	HS-2-20
0710 02120070	-70 (U)	20	52	70	80	—	—	M12	U1/2-13	1.0	
0710 01320070	NT40 -CT20A -70 (U)	20	52	70	80	—	—	M12	U5/8-11	1.4	HS-2-20
0710 02320070	-70 (M)	20	52	70	80	—	—	M12	M16 P=2	1.4	
0710 01332075	NT40 -CT32A -75 (U) ＊1	32	73	75	108	76	26	M18	U5/8-11	2.0	HS-3-32
0710 02332075	-75 (M) ＊1	32	73	75	108	76	26	M18	M16 P=2	2.0	
0710 01532085	NT50 -CT32A -85 (U)	32	73	85	120	—	—	M18	U1-8	4.0	HS-3-32
0710 02532085	-85 (M)	32	73	85	120	—	—	M18	M24 P=3	4.0	
0710 01542085	NT50 -CT42A -85 (U)	42	88	85	120	—	—	M18	U1-8	4.4	HS-4-42
0710 02542085	-85 (M)	42	88	85	120	—	—	M18	M24 P=3	4.4	

1.When ordering, indicate number of spanners required. “No charge” spanners are limited to number of milling chucks on order.
2.Tolerance of cutting tool shank must be h7.

Ordering Example

NT40 - CT 32 A - 75 (U)

Shank size | I.D. (d) | Projection length (L) | Draw-bolt

Spanner

P. 069



Accessories

Models with ＊1 cannot be used with some accessories due to short ℓ length.

	Stopper Bolt BL (P.068)	Straight Collet MC (P.066)	Straight Collet MCA (P.067)	Morse Taper Adapter MA (P.068)	Morse Taper Adapter MAB (P.068)	Jacobs Adapter JA (P.069)	Jacobs Adapter JAB (P.069)
＊1	Yes	Yes	Yes	No	Yes	No	Yes

Min. chucking length

Without MC collet

I.D.of Milling Chuck	Min. chucking length
20、25	45
32、42	60

With MC collet

Collet I.D.	Min. chucking length
6、8	30
10、12	40
16、20	45
25	55
32	60

Inch to Metric (mm) → Inch × 25.4
Metric (mm) to Inch → Metric ÷ 25.4 or Metric × 0.03937

Special / Custom Sizes on request

Set of Milling Chuck (NT-CT·A)

Code	Model	Milling chuck	Draw-bolt	Straight collet	Jacobs adapter
0710 05003020	**NT30 -CT20A（W）**	NT30-CT20A-70（W）	W1/2-12	MC20-6、8、10、12、16 (1pc each)	JA20-JT6 (1pc)
0710 06003020	**NT30 -CT20A（U）**	NT30-CT20A-70（U）	U1/2-13	MC20-6、8、10、12、16 (1pc each)	JA20-JT6 (1pc)
0710 05004020	**NT40 -CT20A（U）**	NT40-CT20A-70（U）	U5/8-11	MC20-6、8、10、12、16 (1pc each)	JA20-JT6 (1pc)
0710 06004020	**NT40 -CT20A（M）**	NT40-CT20A-70（M）	M16 P=2	MC20-6、8、10、12、16 (1pc each)	JA20-JT6 (1pc)
0710 05004032	**NT40 -CT32A（U）**	NT40-CT32A-75（U）	U5/8-11	MC32-6、8、10、12、16、20、25 (1pc each)	—
0710 06004032	**NT40 -CT32A（M）**	NT40-CT32A-75（M）	M16 P=2	MC32-6、8、10、12、16、20、25 (1pc each)	—
0710 05005032	**NT50 -CT32A（U）**	NT50-CT32A-85（U）	U1-8	MC32-6、8、10、12、16、20、25 (1pc each)	JA32-JT6 (1pc)
0710 06005032	**NT50 -CT32A（M）**	NT50-CT32A-85（M）	M24 P=3	MC32-6、8、10、12、16、20、25 (1pc each)	JA32-JT6 (1pc)
0710 05005042	**NT50 -CT42A（U）**	NT50-CT42A-85（U）	U1-8	MC42-6、8、10、12、16、20、25、32 (1pc each)	JA42-JT6 (1pc)
0710 06005042	**NT50 -CT42A（M）**	NT50-CT42A-85（M）	M24 P=3	MC42-6、8、10、12、16、20、25、32 (1pc each)	JA42-JT6 (1pc)

Ordering Example

NT40 - CT 32 A (U)

Shank size　I.D. (d)　Draw-bolt

Miling Chuck Accessories

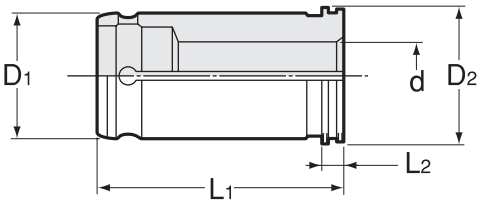

Inch Sizes

Unit : Inch

Type	D_1	D_2	L_1	L_2
MC 0750	0.750	0.945	2.362	0.157
1000	1.000	1.142	2.362	0.157
1250	1.250	1.417	2.835	0.157
2000	2.000	2.244	3.346	0.157

Metric Sizes

Unit : Metric

Type	D_1	D_2	L_1	L_2
MC 16	16	19	50	4
20	20	24	60	4
25	25	29	60	4
32	32	36	72	4
42	42	47	85	4

Standard Collet MC

Collet capacity d	Collet outside diameter D_1								
	0.750	1.000	1.250	2.000	16mm	20mm	25mm	32mm	42mm
1/4	MC0750-0250	MC1000-0250	MC1250-0250						
5/16	MC0750-0312	MC1000-0312	MC1250-0312						
3/8	MC0750-0375	MC1000-0375	MC1250-0375						
1/2	MC0750-0500	MC1000-0500	MC1250-0500						
5/8	MC0750-0625	MC1000-0625	MC1250-0625						
3/4		MC1000-0750	MC1250-0750						
7/8		MC1000-0875	MC1250-0875						
1			MC1250-1000	MC2000-1000					
1-1/4				MC2000-1250					
1-1/2				MC2000-1500					
6mm	MC0750-6	MC1000-6	MC1250-6		MC16-6	MC20-6	MC25-6	MC32-6	MC42-6
8mm	MC0750-8	MC1000-8	MC1250-8		MC16-8	MC20-8	MC25-8	MC32-8	MC42-8
10mm	MC0750-10	MC1000-10	MC1250-10		MC16-10	MC20-10	MC25-10	MC32-10	MC42-10
12mm	MC0750-12	MC1000-12	MC1250-12		MC16-12	MC20-12	MC25-12	MC32-12	MC42-12
16mm	MC0750-16	MC1000-16	MC1250-16			MC20-16	MC25-16	MC32-16	MC42-16
20mm		MC1000-20	MC1250-20				MC25-20	MC32-20	MC42-20
25mm			MC1250-25					MC32-25	MC42-25
32mm									MC42-32

1.Not applicable for some holder sizes. Please see milling chuck pages.

Ordering Example

MC 42 - 32
size (D_1) d

Coolant Collet MC-OH (for cutters with coolant hole)

Collet capacity d	Collet outside diameter D_1								
	0.750	1.000	1.250	2.000	16mm	20mm	25mm	32mm	42mm
1/4	MC0750-0250-OH	MC1000-0250-OH	MC1250-0250-OH						
5/16	MC0750-0312-OH	MC1000-0312-OH	MC1250-0312-OH						
3/8	MC0750-0375-OH	MC1000-0375-OH	MC1250-0375-OH						
1/2	MC0750-0500-OH	MC1000-0500-OH	MC1250-0500-OH						
5/8	MC0750-0625-OH	MC1000-0625-OH	MC1250-0625-OH						
3/4		MC1000-0750-OH	MC1250-0750-OH						
7/8		MC1000-0875-OH	MC1250-0875-OH						
1			MC1250-1000-OH	MC2000-1000-OH					
1-1/4				MC2000-1250-OH					
1-1/2				MC2000-1500-OH					
6mm	MC0750-6-OH	MC1000-6-OH	MC1250-6-OH		MC16-6-OH	MC20-6-OH	MC25-6-OH	MC32-6-OH	MC42-6-OH
8mm	MC0750-8-OH	MC1000-8-OH	MC1250-8-OH		MC16-8-OH	MC20-8-OH	MC25-8-OH	MC32-8-OH	MC42-8-OH
10mm	MC0750-10-OH	MC1000-10-OH	MC1250-10-OH		MC16-10-OH	MC20-10-OH	MC25-10-OH	MC32-10-OH	MC42-10-OH
12mm	MC0750-12-OH	MC1000-12-OH	MC1250-12-OH		MC16-12-OH	MC20-12-OH	MC25-12-OH	MC32-12-OH	MC42-12-OH
16mm	MC0750-16-OH	MC1000-16-OH	MC1250-16-OH			MC20-16-OH	MC25-16-OH	MC32-16-OH	MC42-16-OH
20mm		MC1000-20-OH	MC1250-20-OH				MC25-20-OH	MC32-20-OH	MC42-20-OH
25mm			MC1250-25-OH					MC32-25-OH	MC42-25-OH
32mm									MC42-32-OH

1.Not applicable for some holder sizes. Please see milling chuck pages.

Ordering Example

MC 42 - 32 - OH
size (D_1) d

Inch to Metric (mm) → Inch × 25.4
Metric (mm) to Inch → Metric ÷ 25.4 or Metric × 0.03937

Special / Custom Sizes on request

Coolant Collet MC-C (for cutters without coolant hole)

Collet capacity d	Collet outside diameter D_1								
	0.750	1.000	1.250	2.000	16mm	20mm	25mm	32mm	42mm
1/4	MC0750-0250-C	MC1000-0250-C	MC1250-0250-C						
5/16	MC0750-0312-C	MC1000-0312-C	MC1250-0312-C						
3/8	MC0750-0375-C	MC1000-0375-C	MC1250-0375-C						
1/2	MC0750-0500-C	MC1000-0500-C	MC1250-0500-C						
5/8	MC0750-0625-C	MC1000-0625-C	MC1250-0625-C						
3/4		MC1000-0750-C	MC1250-0750-C						
7/8		MC1000-0875-C	MC1250-0875-C						
1			MC1250-1000-C	MC2000-1000-C					
1-1/4				MC2000-1250-C					
1-1/2				MC2000-1500-C					
6mm	MC0750-6-C	MC1000-6-C	MC1250-6-C		MC16-6-C	MC20-6-C	MC25-6-C	MC32-6-C	MC42-6-C
8mm	MC0750-8-C	MC1000-8-C	MC1250-8-C		MC16-8-C	MC20-8-C	MC25-8-C	MC32-8-C	MC42-8-C
10mm	MC0750-10-C	MC1000-10-C	MC1250-10-C		MC16-10-C	MC20-10-C	MC25-10-C	MC32-10-C	MC42-10-C
12mm	MC0750-12-C	MC1000-12-C	MC1250-12-C		MC16-12-C	MC20-12-C	MC25-12-C	MC32-12-C	MC42-12-C
16mm	MC0750-16-C	MC1000-16-C	MC1250-16-C			MC20-16-C	MC25-16-C	MC32-16-C	MC42-16-C
20mm		MC1000-20-C	MC1250-20-C				MC25-20-C	MC32-20-C	MC42-20-C
25mm			MC1250-25-C					MC32-25-C	MC42-25-C
32mm									MC42-32-C

1.Not applicable for some holder sizes. Please see milling chuck pages.

Ordering Example

MC 42 - 32 - C
size (D_1) d

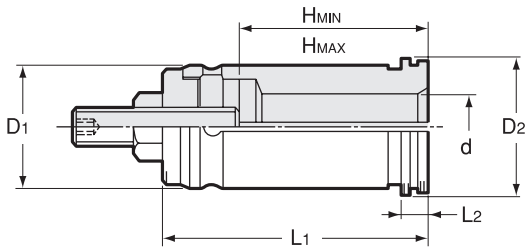

Inch Sizes *Unit : Inch*

Type	D_1	D_2	L_1	L_2	H_{MAX}
MCA 0750	0.750	0.945	2.559	0.157	2.165
1000	1.000	1.142	2.559	0.157	2.165
1250	1.250	1.417	3.110	0.157	2.598
2000	2.000	2.244	3.622	0.157	3.110

Metric Sizes *Unit : Metric*

Type	D_1	D_2	L_1	L_2	H_{MAX}
MCA 16	16	19	55	4	45
20	20	24	65	4	55
25	25	29	65	4	55
32	32	36	79	4	66
42	42	47	92	4	79

Straight Collet MCA (with depth adjustment stop screw)

Collet capacity d	Collet outside diameter D_1								
	0.750	1.000	1.250	2.000	16mm	20mm	25mm	32mm	42mm
1/4	MCA0750-0250	MCA1000-0250	MCA1250-0250						
5/16	MCA0750-0312	MCA1000-0312	MCA1250-0312						
3/8	MCA0750-0375	MCA1000-0375	MCA1250-0375						
1/2	MCA0750-0500	MCA1000-0500	MCA1250-0500						
5/8		MCA1000-0625	MCA1250-0625						
3/4		MCA1000-0750	MCA1250-0750						
7/8			MCA1250-0875						
1				MCA2000-1000					
1-1/4				MCA2000-1250					
1-1/2				MCA2000-1500					
6mm	MCA0750-6	MCA1000-6	MCA1250-6		MCA16-6	MCA20-6	MCA25-6	MCA32-6	MCA42-6
8mm	MCA0750-8	MCA1000-8	MCA1250-8		MCA16-8	MCA20-8	MCA25-8	MCA32-8	MCA42-8
10mm	MCA0750-10	MCA1000-10	MCA1250-10		MCA16-10	MCA20-10	MCA25-10	MCA32-10	MCA42-10
12mm	MCA0750-12	MCA1000-12	MCA1250-12		MCA16-12	MCA20-12	MCA25-12	MCA32-12	MCA42-12
16mm		MCA1000-16	MCA1250-16			MCA20-16	MCA25-16	MCA32-16	MCA42-16
20mm		MCA1000-20	MCA1250-20				MCA25-20	MCA32-20	MCA42-20
25mm			MCA1250-25					MCA32-25	MCA42-25
32mm									MCA42-32

1.Not applicable for some holder sizes. Please see milling chuck pages.

Ordering Example

MCA 42 - 32
size (D_1) d

Miling Chuck Accessories

Stopper Bolt BL

Metric Sizes *Unit : Metric*

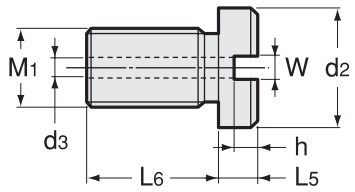

Code	Model	M1 P=1.0	L5	L6	W	h	d2	d3	Chucks
0711 040016 ※※	**BL 16 -L5**	10	5、15、25	14	5	3.5	15	4.5	CT16
0711 040020 ※※	**BL 20 -L5**	12	5、15、25	14	5	3.5	18	4.5	CT20、CT25
0711 040032 ※※	**BL 32 -L5**	18	10、20、35	17	5	5	25	4.5	CT32、CT42

Choose right L5 dimension by checking minimum insertion length and shank I.D. depth.

Ordering Example

BL 16 - 15
size L5

Morse Taper Adapter MA (with Tr. nut)

Metric Sizes *Unit : Metric*

Type 1

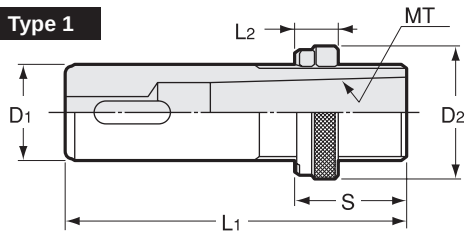

Type 2

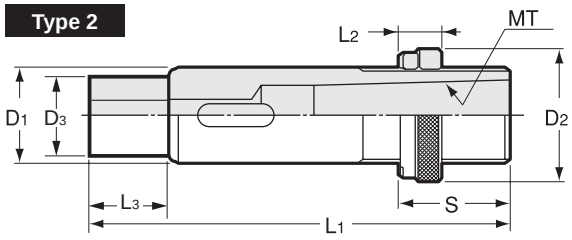

Code	Model	Type	D1	MT	D2	D3	L1	L2	L3	S
0714 02000161	**MA 16 -MT1**	1	16	1	24.6	—	76	16	—	16 ~ 32
0714 02000201	**20 -MT1**	1	20	1	31.6	—	85	16	—	16 ~ 37
0714 02000251	**25 -MT1**	1	25	1	35.6	—	89	16	—	16 ~ 37
0714 02000252	**-MT2**	1	25	2	35.6	—	89	16	—	16 ~ 37
0714 02000321	**32 -MT1**	2	32	1	44.6	25	119	19	30	19 ~ 39
0714 02000322	**-MT2**	2	32	2	44.6	25	119	19	30	19 ~ 39
0714 02000323	**-MT3**	2	32	3	44.6	25	119	19	30	19 ~ 39
0714 02000421	**42 -MT1**	1	42	1	55.6	—	135	19	—	19 ~ 48
0714 02000422	**-MT2**	1	42	2	55.6	—	135	19	—	19 ~ 48
0714 02000423	**-MT3**	1	42	3	55.6	—	135	19	—	19 ~ 48
0714 02000424	**-MT4**	1	42	4	55.6	—	135	19	—	19 ~ 48

Not applicable for some holder sizes. Please see milling chuck pages.

Ordering Example

MA 16 - MT1
size MT No.

Morse Taper Adapter MAB

Metric Sizes *Unit : Metric*

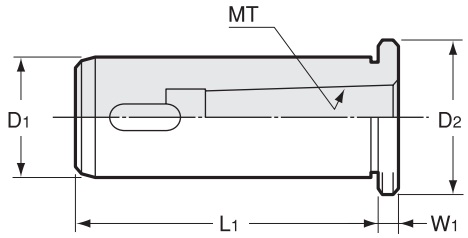

Code	Model	D1	MT	L1	D2	W1
0711 02100161	**MAB 16 -MT1**	16	1	60	19	15
0711 02100201	**20 -MT1**	20	1	75	24	5
0711 02100251	**25 -MT1**	25	1	75	29	5
0711 02100252	**-MT2**	25	2	75	29	20
0711 02100321	**32 -MT1**	32	1	75	36	5
0711 02100322	**-MT2**	32	2	75	36	20
0711 02100323	**-MT3**	32	3	75	36	35
0711 02100421	**42 -MT1**	42	1	115	47	5
0711 02100422	**-MT2**	42	2	115	47	5
0711 02100423	**-MT3**	42	3	115	47	5
0711 02100424	**-MT4**	42	4	115	47	20

Not applicable for some holder sizes. Please see milling chuck pages.

Ordering Example

MAB 16 - MT1
size MT No.

Inch to Metric (mm) → Inch × 25.4
Metric (mm) to Inch → Metric ÷ 25.4 or Metric × 0.03937

Special / Custom Sizes on request

Jacobs Adapter JA (with Tr. nut) — Metric Sizes

Unit : Metric

Type 1

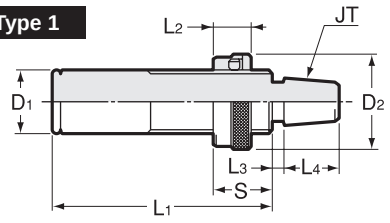

Type 2

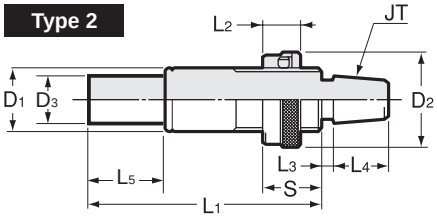

Code	Model	Type	D1	JT	D2	D3	L1	L2	S	L3	L4	L5
0714 03000162	JA 16 -JT2S	1	16	2S	24.6	—	76	16	16 ~ 32	3	18	—
0714 03000202	20 -JT2S	1	20	2S	31.6	—	85	16	16 ~ 37	3	18	—
0714 03000206	-JT6	1	20	6	31.6	—	85	16	16 ~ 37	4	24	—
0714 03000252	25 -JT2S	1	25	2S	35.6	—	85	16	16 ~ 37	3	18	—
0714 03000256	-JT6	1	25	6	35.6	—	85	16	16 ~ 37	4	24	—
0714 03000322	32 -JT2S	2	32	2S	44.6	25	119	19	19 ~ 39	3	18	30
0714 03000326	-JT6	2	32	6	44.6	25	119	19	19 ~ 39	4	24	30
0714 03000422	42 -JT2S	1	42	2S	55.6	—	135	19	19 ~ 48	3	18	—
0714 03000426	-JT6	1	42	6	55.6	—	135	19	19 ~ 48	4	24	—

Not applicable for some holder sizes. Please see milling chuck pages.

Ordering Example

JA 16 - JT2S
size JT No.

Jacobs Adapter JAB — Metric Sizes

Unit : Metric

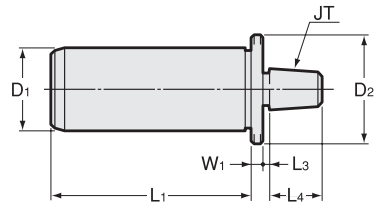

Code	Model	D1	JT	L1	D2	W1	L3	L4
0711 03100162	JAB 16 -JT2S	16	2S	60	19	3	3	18
0711 03100202	20 -JT2S	20	2S	75	24	3	3	18
0711 03100206	-JT6	20	6	75	24	3	4	24
0711 03100252	25 -JT2S	25	2S	75	29	3	3	18
0711 03100256	-JT6	25	6	75	29	3	4	24
0711 03100322	32 -JT2S	32	2S	75	36	3	3	18
0711 03100326	-JT6	32	6	75	36	3	4	24
0711 03100422	42 -JT2S	42	2S	115	47	3	3	18
0711 03100426	-JT6	42	6	115	47	3	4	24

Not applicable for some holder sizes. Please see milling chuck pages.

Ordering Example

JAB 16 - JT2S
size JT No.

Spanner



Code	Spanner	Chuck	Chuck size	
			mm	inch
0711 00001016	HS-1-16	CT·S, CT·A	16	—
0711 00002020	HS-2-20	CT·S, CT·A	20	0750
0711 00002525	HS-2.5-25	CT·S, CT·A, CTZ	25	1000
0711 00003032	HS-3-32	CT·S, CT·A, CTZ	32	1250
0711 00004042	HS-4-42	CT·S, CT·A, CTZ	42	—
0711 00005042	HS-4V	CT·S	—	2000

Ordering Example

HS - 1 - 16

HDC·A

High-Precision Collet Holder

● Suitable for drilling, reaming and finish endmilling.



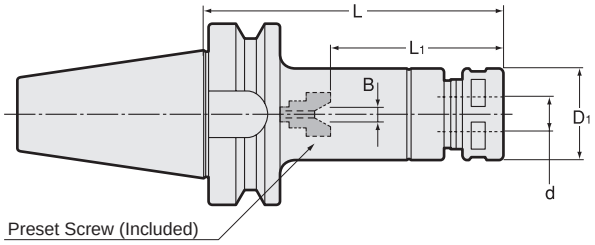

Unit : Metric

Code	Model			d	L	B	L1	D1	Nut	kg	Collet	Spanner
2540 10107045	**BT30**	**-HDC07A**	**-45**	0.5 ~ 7.0	45	0 ~ 4	22 ~ 43	23	HDP-07A	0.5		
2540 10107060			**-60**	0.5 ~ 7.0	60	0 ~ 4	22 ~ 45	23	HDP-07A	0.5		
2540 10107075			**-75**	0.5 ~ 7.0	75	0 ~ 4	22 ~ 45	23	HDP-07A	0.5		
2540 10107090			**-90**	0.5 ~ 7.0	90	0 ~ 4	22 ~ 45	23	HDP-07A	0.6	FDC-07	S-0
2540 10107105			**-105**	0.5 ~ 7.0	105	0 ~ 4	22 ~ 45	23	HDP-07A	0.6		
2540 10107120			**-120**	0.5 ~ 7.0	120	0 ~ 4	22 ~ 45	23	HDP-07A	0.7		
2540 10107135			**-135**	0.5 ~ 7.0	135	0 ~ 4	22 ~ 45	23	HDP-07A	0.7		
2540 10109045	**BT30**	**-HDC09A**	**-45**	2.5 ~ 9.0	45	0 ~ 4	27 ~ 44	26	HDP-09	0.5		
2540 10109060			**-60**	2.5 ~ 9.0	60	0 ~ 4	27 ~ 54	26	HDP-09	0.5		
2540 10109075			**-75**	2.5 ~ 9.0	75	0 ~ 4	27 ~ 57	26	HDP-09	0.6		
2540 10109090			**-90**	2.5 ~ 9.0	90	0 ~ 4	27 ~ 57	26	HDP-09	0.6	FDC-09	S-1L
2540 10109105			**-105**	2.5 ~ 9.0	105	0 ~ 4	27 ~ 57	26	HDP-09	0.7		
2540 10109120			**-120**	2.5 ~ 9.0	120	0 ~ 4	27 ~ 57	26	HDP-09	0.7		
2540 10109135			**-135**	2.5 ~ 9.0	135	0 ~ 4	27 ~ 57	26	HDP-09	0.8		
2540 10112045	**BT30**	**-HDC12A**	**-45**	2.5 ~ 12.0	45	0 ~ 5	33 ~ 51	32	HDP-12	0.5		
2540 10112060			**-60**	2.5 ~ 12.0	60	0 ~ 5	33 ~ 54	32	HDP-12	0.6		
2540 10112075			**-75**	2.5 ~ 12.0	75	0 ~ 5	33 ~ 69	32	HDP-12	0.6		
2540 10112090			**-90**	2.5 ~ 12.0	90	0 ~ 5	33 ~ 69	32	HDP-12	0.7	FDC-12	S-3L
2540 10112105			**-105**	2.5 ~ 12.0	105	0 ~ 5	33 ~ 69	32	HDP-12	0.8		
2540 10112120			**-120**	2.5 ~ 12.0	120	0 ~ 5	33 ~ 69	32	HDP-12	0.9		
2540 10112135			**-135**	2.5 ~ 12.0	135	0 ~ 5	33 ~ 69	32	HDP-12	1.0		
2540 10116045	**BT30**	**-HDC16A**	**-45**	3.5 ~ 16.0	45	0 ~ 6	38 ~ 51	36	HDP-16	0.4		
2540 10116060			**-60**	3.5 ~ 16.0	60	0 ~ 6	38 ~ 54	36	HDP-16	0.6		
2540 10116075			**-75**	3.5 ~ 16.0	75	0 ~ 6	38 ~ 69	36	HDP-16	0.6		
2540 10116090			**-90**	3.5 ~ 16.0	90	0 ~ 6	38 ~ 82	36	HDP-16	0.7	FDC-16	S-4L
2540 10116105			**-105**	3.5 ~ 16.0	105	0 ~ 6	38 ~ 82	36	HDP-16	0.9		
2540 10116120			**-120**	3.5 ~ 16.0	120	0 ~ 6	38 ~ 82	36	HDP-16	1.0		
2540 10116135			**-135**	3.5 ~ 16.0	135	0 ~ 6	38 ~ 82	36	HDP-16	1.1		
2540 10122045	**BT30**	**-HDC22A**	**-45**	3.5 ~ 22.0	45	—	52	46	HDP-22	0.4		
2540 10122060			**-60**	3.5 ~ 22.0	60	0 ~ 8	47 ~ 49	46	HDP-22	0.6		
2540 10122075			**-75**	3.5 ~ 22.0	75	0 ~ 8	47 ~ 64	46	HDP-22	0.7		
2540 10122090			**-90**	3.5 ~ 22.0	90	0 ~ 8	47 ~ 79	46	HDP-22	0.9	FDC-22	S-5L
2540 10122105			**-105**	3.5 ~ 22.0	105	0 ~ 8	47 ~ 94	46	HDP-22	1.0		
2540 10122120			**-120**	3.5 ~ 22.0	120	0 ~ 8	47 ~ 103	46	HDP-22	1.2		
2540 10122135			**-135**	3.5 ~ 22.0	135	0 ~ 8	47 ~ 103	46	HDP-22	1.3		
2540 10307060	**BT40**	**-HDC07A**	**-60**	0.5 ~ 7.0	60	0 ~ 4	22 ~ 45	23	HDP-07A	1.1		
2540 10307075			**-75**	0.5 ~ 7.0	75	0 ~ 4	22 ~ 45	23	HDP-07A	1.1		
2540 10307090			**-90**	0.5 ~ 7.0	90	0 ~ 4	22 ~ 45	23	HDP-07A	1.1	FDC-07	S-0
2540 10307105			**-105**	0.5 ~ 7.0	105	0 ~ 4	22 ~ 45	23	HDP-07A	1.2		
2540 10307120			**-120**	0.5 ~ 7.0	120	0 ~ 4	22 ~ 45	23	HDP-07A	1.3		
2540 10309060	**BT40**	**-HDC09A**	**-60**	2.5 ~ 9.0	60	0 ~ 4	27 ~ 57	26	HDP-09	1.1		
2540 10309090			**-90**	2.5 ~ 9.0	90	0 ~ 4	27 ~ 57	26	HDP-09	1.2		
2540 10309105			**-105**	2.5 ~ 9.0	105	0 ~ 4	27 ~ 57	26	HDP-09	1.2	FDC-09	S-1L
2540 10309120			**-120**	2.5 ~ 9.0	120	0 ~ 4	27 ~ 57	26	HDP-09	1.3		
2540 10309135			**-135**	2.5 ~ 9.0	135	0 ~ 4	27 ~ 57	26	HDP-09	1.3		
2540 10309165			**-165**	2.5 ~ 9.0	165	0 ~ 4	27 ~ 57	26	HDP-09	1.4		

Inch to Metric (mm) → Inch × 25.4
Metric (mm) to Inch → Metric ÷ 25.4 or Metric × 0.03937

Special / Custom Sizes on request

Unit : Metric

Code	Model			d	L	B	L1	D1	Nut	kg	Collet	Spanner
2540 10312060	BT40	-HDC12A	-60	2.5 ~ 12.0	60	0 ~ 5	33 ~ 61	32	HDP-12	1.2	FDC-12	S-3L
2540 10312090			-90	2.5 ~ 12.0	90	0 ~ 5	33 ~ 69	32	HDP-12	1.3		
2540 10312105			-105	2.5 ~ 12.0	105	0 ~ 5	33 ~ 69	32	HDP-12	1.3		
2540 10312120			-120	2.5 ~ 12.0	120	0 ~ 5	33 ~ 69	32	HDP-12	1.4		
2540 10312135			-135	2.5 ~ 12.0	135	0 ~ 5	33 ~ 69	32	HDP-12	1.5		
2540 10312165			-165	2.5 ~ 12.0	165	0 ~ 5	33 ~ 69	32	HDP-12	1.6		
2540 10312195			-195	2.5 ~ 12.0	195	0 ~ 5	33 ~ 69	32	HDP-12	1.8		
2540 10316060	BT40	-HDC16A	-60	3.5 ~ 16.0	60	0 ~ 6	38 ~ 64	36	HDP-16	1.1	FDC-16	S-4L
2540 10316090			-90	3.5 ~ 16.0	90	0 ~ 6	38 ~ 82	36	HDP-16	1.3		
2540 10316105			-105	3.5 ~ 16.0	105	0 ~ 6	38 ~ 82	36	HDP-16	1.4		
2540 10316120			-120	3.5 ~ 16.0	120	0 ~ 6	38 ~ 82	36	HDP-16	1.5		
2540 10316135			-135	3.5 ~ 16.0	135	0 ~ 6	38 ~ 82	36	HDP-16	1.6		
2540 10316165			-165	3.5 ~ 16.0	165	0 ~ 6	38 ~ 82	36	HDP-16	1.8		
2540 10316195			-195	3.5 ~ 16.0	195	0 ~ 6	38 ~ 82	36	HDP-16	2.0		
2540 10322060	BT40	-HDC22A	-60	3.5 ~ 22.0	60	0 ~ 8	47 ~ 66	46	HDP-22	1.1	FDC-22	S-5L
2540 10322075			-75	3.5 ~ 22.0	75	0 ~ 8	47 ~ 81	46	HDP-22	1.2		
2540 10322090			-90	3.5 ~ 22.0	90	0 ~ 8	47 ~ 96	46	HDP-22	1.4		
2540 10322105			-105	3.5 ~ 22.0	105	0 ~ 8	47 ~ 103	46	HDP-22	1.5		
2540 10322120			-120	3.5 ~ 22.0	120	0 ~ 8	47 ~ 103	46	HDP-22	1.7		
2540 10322135			-135	3.5 ~ 22.0	135	0 ~ 8	47 ~ 103	46	HDP-22	1.9		
2540 10322165			-165	3.5 ~ 22.0	165	0 ~ 8	47 ~ 103	46	HDP-22	2.2		
2540 10322195			-195	3.5 ~ 22.0	195	0 ~ 8	47 ~ 103	46	HDP-22	2.6		
2540 10507090	BT50	-HDC07A	-90	0.5 ~ 7.0	90	0 ~ 4	22 ~ 45	23	HDP-07A	3.6	FDC-07	S-0
2540 10507105			-105	0.5 ~ 7.0	105	0 ~ 4	22 ~ 45	23	HDP-07A	3.6		
2540 10507120			-120	0.5 ~ 7.0	120	0 ~ 4	22 ~ 45	23	HDP-07A	3.7		
2540 10507135			-135	0.5 ~ 7.0	135	0 ~ 4	22 ~ 45	23	HDP-07A	3.7		
2540 10507165			-165	0.5 ~ 7.0	165	0 ~ 4	22 ~ 45	23	HDP-07A	3.9		
2540 10507195			-195	0.5 ~ 7.0	195	0 ~ 4	22 ~ 45	23	HDP-07A	4.0		
2540 10509090	BT50	-HDC09A	-90	2.5 ~ 9.0	90	0 ~ 4	27 ~ 57	26	HDP-09	3.7	FDC-09	S-1L
2540 10509105			-105	2.5 ~ 9.0	105	0 ~ 4	27 ~ 57	26	HDP-09	3.8		
2540 10509120			-120	2.5 ~ 9.0	120	0 ~ 4	27 ~ 57	26	HDP-09	3.8		
2540 10509135			-135	2.5 ~ 9.0	135	0 ~ 4	27 ~ 57	26	HDP-09	3.8		
2540 10509165			-165	2.5 ~ 9.0	165	0 ~ 4	27 ~ 57	26	HDP-09	3.9		
2540 10509195			-195	2.5 ~ 9.0	195	0 ~ 4	27 ~ 57	26	HDP-09	4.0		
2540 10509225			-225	2.5 ~ 9.0	225	0 ~ 4	27 ~ 57	26	HDP-09	4.1		
2540 10509255			-255	2.5 ~ 9.0	255	0 ~ 4	27 ~ 57	26	HDP-09	4.3		
2540 10512090	BT50	-HDC12A	-90	2.5 ~ 12.0	90	0 ~ 5	33 ~ 69	32	HDP-12	3.8	FDC-12	S-3L
2540 10512105			-105	2.5 ~ 12.0	105	0 ~ 5	33 ~ 69	32	HDP-12	3.8		
2540 10512120			-120	2.5 ~ 12.0	120	0 ~ 5	33 ~ 69	32	HDP-12	3.9		
2540 10512135			-135	2.5 ~ 12.0	135	0 ~ 5	33 ~ 69	32	HDP-12	4.0		
2540 10512165			-165	2.5 ~ 12.0	165	0 ~ 5	33 ~ 69	32	HDP-12	4.1		
2540 10512195			-195	2.5 ~ 12.0	195	0 ~ 5	33 ~ 69	32	HDP-12	4.3		
2540 10512225			-225	2.5 ~ 12.0	225	0 ~ 5	33 ~ 69	32	HDP-12	4.4		
2540 10512255			-255	2.5 ~ 12.0	255	0 ~ 5	33 ~ 69	32	HDP-12	4.6		
2540 10516090	BT50	-HDC16A	-90	3.5 ~ 16.0	90	0 ~ 6	38 ~ 82	36	HDP-16	3.8	FDC-16	S-4L
2540 10516105			-105	3.5 ~ 16.0	105	0 ~ 6	38 ~ 82	36	HDP-16	3.9		
2540 10516120			-120	3.5 ~ 16.0	120	0 ~ 6	38 ~ 82	36	HDP-16	4.0		
2540 10516135			-135	3.5 ~ 16.0	135	0 ~ 6	38 ~ 82	36	HDP-16	4.1		
2540 10516165			-165	3.5 ~ 16.0	165	0 ~ 6	38 ~ 82	36	HDP-16	4.2		
2540 10516195			-195	3.5 ~ 16.0	195	0 ~ 6	38 ~ 82	36	HDP-16	4.5		
2540 10516225			-225	3.5 ~ 16.0	225	0 ~ 6	38 ~ 82	36	HDP-16	4.6		
2540 10516255			-255	3.5 ~ 16.0	255	0 ~ 6	38 ~ 82	36	HDP-16	4.8		
2540 10522105	BT50	-HDC22A	-105	3.5 ~ 22.0	105	0 ~ 8	47 ~ 103	46	HDP-22	4.0	FDC-22	S-5L
2540 10522120			-120	3.5 ~ 22.0	120	0 ~ 8	47 ~ 103	46	HDP-22	4.2		
2540 10522135			-135	3.5 ~ 22.0	135	0 ~ 8	47 ~ 103	46	HDP-22	4.3		
2540 10522150			-150	3.5 ~ 22.0	150	0 ~ 8	47 ~ 103	46	HDP-22	4.5		
2540 10522165			-165	3.5 ~ 22.0	165	0 ~ 8	47 ~ 103	46	HDP-22	4.7		
2540 10522195			-195	3.5 ~ 22.0	195	0 ~ 8	47 ~ 103	46	HDP-22	5.0		
2540 10522225			-225	3.5 ~ 22.0	225	0 ~ 8	47 ~ 103	46	HDP-22	5.3		
2540 10522255			-255	3.5 ~ 22.0	255	0 ~ 8	47 ~ 103	46	HDP-22	5.6		

1.Collet, spanner, hexagon head preset screw, preset screw for semi-dry processing are sold separately. Standard preset screw is included.
2.Refer to P.092 for minimum tool insertion length in case of using our coolant collets (OH,C or MS).
3.L1 indicates dimension when using with a preset screw.
4.See P.499 for standard Tightening Torque.

Collet
P. 086 - 089



Spanner
P. 095



Preset screw
P. 094

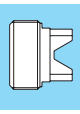

Ordering Example

BT30 - HDC 16 A - 105

Shank size | Max. collet I.D. | Projection length (L)

Inch to Metric (mm) → Inch × 25.4
Metric (mm) to Inch → Metric ÷ 25.4 or Metric × 0.03937

Special / Custom Sizes on request

HDC·A-CF

High-Precision Collet Holder (Flange Through Type)

● Flange through coolant type collet holder. DIN69871 Form B compliance.

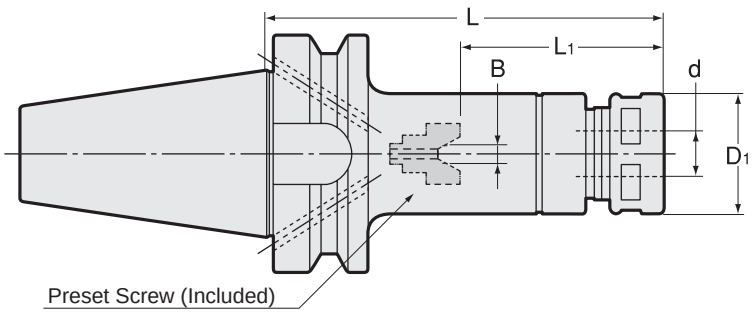

●DIN69871 Form B
●Max. Coolant pressure
6MPa (HDC22A-CF)
7MPa (Other sizes)

Unit : Metric

Code	Model			d	L	B	L1	D1	Nut	kg	Collet	Spanner
2546 10307075	**BT40**	**-HDC07A**	**-75CF**	0.5 ~ 7.0	75	0 ~ 4	22 ~ 40	23	HDP-07A	1.1	FDC-07	S-0
2546 10307090			**-90CF**	0.5 ~ 7.0	90	0 ~ 4	22 ~ 45	23	HDP-07A	1.1		
2546 10307105			**-105CF**	0.5 ~ 7.0	105	0 ~ 4	22 ~ 45	23	HDP-07A	1.2		
2546 10309090	**BT40**	**-HDC09A**	**-90CF**	2.5 ~ 9.0	90	0 ~ 4	27 ~ 56	26	HDP-09	1.2	FDC-09	S-1L
2546 10309105			**-105CF**	2.5 ~ 9.0	105	0 ~ 4	27 ~ 57	26	HDP-09	1.3		
2546 10309120			**-120CF**	2.5 ~ 9.0	120	0 ~ 4	27 ~ 57	26	HDP-09	1.3		
2546 10309135			**-135CF**	2.5 ~ 9.0	135	0 ~ 4	27 ~ 57	26	HDP-09	1.4		
2546 10309165			**-165CF**	2.5 ~ 9.0	165	0 ~ 4	27 ~ 57	26	HDP-09	1.5		
2546 10312090	**BT40**	**-HDC12A**	**-90CF**	2.5 ~ 12.0	90	0 ~ 5	33 ~ 54	32	HDP-12	1.3	FDC-12	S-3L
2546 10312105			**-105CF**	2.5 ~ 12.0	105	0 ~ 5	33 ~ 69	32	HDP-12	1.4		
2546 10312120			**-120CF**	2.5 ~ 12.0	120	0 ~ 5	33 ~ 69	32	HDP-12	1.5		
2546 10312135			**-135CF**	2.5 ~ 12.0	135	0 ~ 5	33 ~ 69	32	HDP-12	1.5		
2546 10312165			**-165CF**	2.5 ~ 12.0	165	0 ~ 5	33 ~ 69	32	HDP-12	1.7		
2546 10312195			**-195CF**	2.5 ~ 12.0	195	0 ~ 5	33 ~ 69	32	HDP-12	1.9		
2546 10316090	**BT40**	**-HDC16A**	**-90CF**	3.5 ~ 16.0	90	0 ~ 6	38 ~ 56	36	HDP-16	1.3	FDC-16	S-4L
2546 10316105			**-105CF**	3.5 ~ 16.0	105	0 ~ 6	38 ~ 71	36	HDP-16	1.4		
2546 10316120			**-120CF**	3.5 ~ 16.0	120	0 ~ 6	38 ~ 82	36	HDP-16	1.5		
2546 10316135			**-135CF**	3.5 ~ 16.0	135	0 ~ 6	38 ~ 82	36	HDP-16	1.7		
2546 10316165			**-165CF**	3.5 ~ 16.0	165	0 ~ 6	38 ~ 82	36	HDP-16	1.8		
2546 10316195			**-195CF**	3.5 ~ 16.0	195	0 ~ 6	38 ~ 82	36	HDP-16	2.0		
2546 10322105	**BT40**	**-HDC22A**	**-105CF**	3.5 ~ 22.0	105	0 ~ 8	47 ~ 69	46	HDP-22	1.6	FDC-22	S-5L
2546 10322120			**-120CF**	3.5 ~ 22.0	120	0 ~ 8	47 ~ 84	46	HDP-22	1.8		
2546 10322135			**-135CF**	3.5 ~ 22.0	135	0 ~ 8	47 ~ 99	46	HDP-22	1.9		
2546 10322165			**-165CF**	3.5 ~ 22.0	165	0 ~ 8	47 ~ 103	46	HDP-22	2.3		
2546 10322195			**-195CF**	3.5 ~ 22.0	195	0 ~ 8	47 ~ 103	46	HDP-22	2.6		
2546 10507090	**BT50**	**-HDC07A**	**-90CF**	0.5 ~ 7.0	90	0 ~ 4	22 ~ 45	23	HDP-07A	3.5	FDC-07	S-0
2546 10507105			**-105CF**	0.5 ~ 7.0	105	0 ~ 4	22 ~ 45	23	HDP-07A	3.6		
2546 10507120			**-120CF**	0.5 ~ 7.0	120	0 ~ 4	22 ~ 45	23	HDP-07A	3.7		
2546 10507135			**-135CF**	0.5 ~ 7.0	135	0 ~ 4	22 ~ 45	23	HDP-07A	3.8		
2546 10507165			**-165CF**	0.5 ~ 7.0	165	0 ~ 4	22 ~ 45	23	HDP-07A	3.9		
2546 10507195			**-195CF**	0.5 ~ 7.0	195	0 ~ 4	22 ~ 45	23	HDP-07A	4.0		
2546 10509090	**BT50**	**-HDC09A**	**-90CF**	2.5 ~ 9.0	90	0 ~ 4	27 ~ 48	26	HDP-09	3.6	FDC-09	S-1L
2546 10509105			**-105CF**	2.5 ~ 9.0	105	0 ~ 4	27 ~ 57	26	HDP-09	3.7		
2546 10509120			**-120CF**	2.5 ~ 9.0	120	0 ~ 4	27 ~ 57	26	HDP-09	3.8		
2546 10509135			**-135CF**	2.5 ~ 9.0	135	0 ~ 4	27 ~ 57	26	HDP-09	3.9		
2546 10509165			**-165CF**	2.5 ~ 9.0	165	0 ~ 4	27 ~ 57	26	HDP-09	4.0		
2546 10509195			**-195CF**	2.5 ~ 9.0	195	0 ~ 4	27 ~ 57	26	HDP-09	4.1		
2546 10509225			**-225CF**	2.5 ~ 9.0	225	0 ~ 4	27 ~ 57	26	HDP-09	4.2		
2546 10509255			**-255CF**	2.5 ~ 9.0	255	0 ~ 4	27 ~ 57	26	HDP-09	4.3		

Inch to Metric (mm) → Inch × 25.4
Metric (mm) to Inch → Metric ÷ 25.4 or Metric × 0.03937

Special / Custom Sizes on request

Unit : Metric

Code	Model	d	L	B	L1	D1	Nut	kg	Collet	Spanner
2546 10512090	BT50 -HDC12A -90CF	2.5 ~ 12.0	90	0 ~ 5	33 ~ 47	32	HDP-12	3.7	FDC-12	S-3L
2546 10512105	-105CF	2.5 ~ 12.0	105	0 ~ 5	33 ~ 62	32	HDP-12	3.8		
2546 10512120	-120CF	2.5 ~ 12.0	120	0 ~ 5	33 ~ 69	32	HDP-12	3.9		
2546 10512135	-135CF	2.5 ~ 12.0	135	0 ~ 5	33 ~ 69	32	HDP-12	4.0		
2546 10512165	-165CF	2.5 ~ 12.0	165	0 ~ 5	33 ~ 69	32	HDP-12	4.1		
2546 10512195	-195CF	2.5 ~ 12.0	195	0 ~ 5	33 ~ 69	32	HDP-12	4.2		
2546 10512225	-225CF	2.5 ~ 12.0	225	0 ~ 5	33 ~ 69	32	HDP-12	4.3		
2546 10512255	-255CF	2.5 ~ 12.0	255	0 ~ 5	33 ~ 69	32	HDP-12	4.4		
2546 10516090	BT50 -HDC16A -90CF	3.5 ~ 16.0	90	0 ~ 6	38 ~ 47	36	HDP-16	3.7	FDC-16	S-4L
2546 10516105	-105CF	3.5 ~ 16.0	105	0 ~ 6	38 ~ 62	36	HDP-16	3.8		
2546 10516120	-120CF	3.5 ~ 16.0	120	0 ~ 6	38 ~ 77	36	HDP-16	3.9		
2546 10516135	-135CF	3.5 ~ 16.0	135	0 ~ 6	38 ~ 82	36	HDP-16	4.0		
2546 10516165	-165CF	3.5 ~ 16.0	165	0 ~ 6	38 ~ 82	36	HDP-16	4.2		
2546 10516195	-195CF	3.5 ~ 16.0	195	0 ~ 6	38 ~ 82	36	HDP-16	4.4		
2546 10516225	-225CF	3.5 ~ 16.0	225	0 ~ 6	38 ~ 82	36	HDP-16	4.6		
2546 10516255	-255CF	3.5 ~ 16.0	255	0 ~ 6	38 ~ 82	36	HDP-16	4.8		
2546 10522105	BT50 -HDC22A -105CF	3.5 ~ 22.0	105	0 ~ 8	47 ~ 60	46	HDP-22	4.0	FDC-22	S-5L
2546 10522120	-120CF	3.5 ~ 22.0	120	0 ~ 8	47 ~ 75	46	HDP-22	4.2		
2546 10522135	-135CF	3.5 ~ 22.0	135	0 ~ 8	47 ~ 90	46	HDP-22	4.3		
2546 10522150	-150CF	3.5 ~ 22.0	150	0 ~ 8	47 ~ 103	46	HDP-22	4.4		
2546 10522165	-165CF	3.5 ~ 22.0	165	0 ~ 8	47 ~ 103	46	HDP-22	4.6		
2546 10522195	-195CF	3.5 ~ 22.0	195	0 ~ 8	47 ~ 103	46	HDP-22	4.8		
2546 10522225	-225CF	3.5 ~ 22.0	225	0 ~ 8	47 ~ 103	46	HDP-22	5.0		
2546 10522255	-255CF	3.5 ~ 22.0	255	0 ~ 8	47 ~ 103	46	HDP-22	5.2		

1.Collet, spanner, hexagon head preset screw and preset screw for semi-dry processing are sold separately. Standard preset screw is included.
2.Refer to P. 092 for minimum tool insertion length in case of using our coolant collets (OH,C or MS).
3.L1 indicates dimension when using with a preset screw.
4.See P.499 for standard Tightening Torque.

Collet
P. 086-089


Spanner
P. 095


Preset screw
P. 094
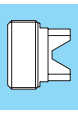

Ordering Example

BT30 - HDC 16 A - 105 CF
Shank size
Max. collet I.D.
Projection length (L)

SDM

Drill Holder With Easy Tool Length Adjustment

● Projection length of the cutting tool can be adjusted by simply turning circumference of the holder.



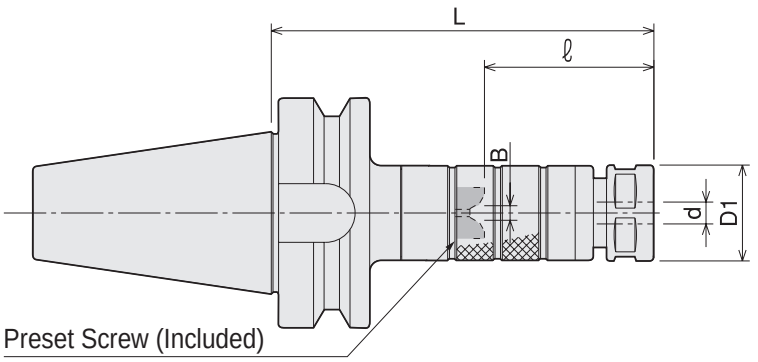

Unit : Metric

Code	Model			d	L	ℓ	B	D1	Nut	Collet	Spanner
3920 00107075	**BT30**	**-SDM07**	**-75**	0.5 ~ 7.0	75	29 ~ 39	0 ~ 4	23	HDP-07A	FDC-07	S-0
3920 00107090			**-90**	0.5 ~ 7.0	90	29 ~ 54	0 ~ 4	23	HDP-07A		
3920 00107105			**-105**	0.5 ~ 7.0	105	29 ~ 54	0 ~ 4	23	HDP-07A		
3920 00107120			**-120**	0.5 ~ 7.0	120	29 ~ 54	0 ~ 4	23	HDP-07A		
3920 00107135			**-135**	0.5 ~ 7.0	135	29 ~ 54	0 ~ 4	23	HDP-07A		
3920 00107150			**-150**	0.5 ~ 7.0	150	29 ~ 54	0 ~ 4	23	HDP-07A		
3920 00109090	**BT30**	**-SDM09**	**-90**	2.5 ~ 9.0	90	28 ~ 38	0 ~ 4	26	HDP-09	FDC-09	S-1L
3920 00109105			**-105**	2.5 ~ 9.0	105	28 ~ 53	0 ~ 4	26	HDP-09		
3920 00109120			**-120**	2.5 ~ 9.0	120	28 ~ 53	0 ~ 4	26	HDP-09		
3920 00109135			**-135**	2.5 ~ 9.0	135	28 ~ 53	0 ~ 4	26	HDP-09		
3920 00109150			**-150**	2.5 ~ 9.0	150	28 ~ 53	0 ~ 4	26	HDP-09		
3920 00109165			**-165**	2.5 ~ 9.0	165	28 ~ 53	0 ~ 4	26	HDP-09		
3920 00112090	**BT30**	**-SDM12**	**-90**	2.5 ~ 12.0	90	34 ~ 44	0 ~ 5	32	HDP-12	FDC-12	S-3L
3920 00112105			**-105**	2.5 ~ 12.0	105	34 ~ 59	0 ~ 5	32	HDP-12		
3920 00112120			**-120**	2.5 ~ 12.0	120	34 ~ 59	0 ~ 5	32	HDP-12		
3920 00112135			**-135**	2.5 ~ 12.0	135	34 ~ 59	0 ~ 5	32	HDP-12		
3920 00112150			**-150**	2.5 ~ 12.0	150	34 ~ 59	0 ~ 5	32	HDP-12		
3920 00112165			**-165**	2.5 ~ 12.0	165	34 ~ 59	0 ~ 5	32	HDP-12		
3920 00116105	**BT30**	**-SDM16**	**-105**	3.5 ~ 16.0	105	40 ~ 50	0 ~ 6	36	HDP-16	FDC-16	S-4L
3920 00116120			**-120**	3.5 ~ 16.0	120	40 ~ 65	0 ~ 6	36	HDP-16		
3920 00116135			**-135**	3.5 ~ 16.0	135	40 ~ 65	0 ~ 6	36	HDP-16		
3920 00116150			**-150**	3.5 ~ 16.0	150	40 ~ 65	0 ~ 6	36	HDP-16		
3920 00116165			**-165**	3.5 ~ 16.0	165	40 ~ 65	0 ~ 6	36	HDP-16		
3920 00122105	**BT30**	**-SDM22**	**-105**	3.5 ~ 22.0	105	48 ~ 58	0 ~ 8	46	HDP-22	FDC-22	S-5L
3920 00122120			**-120**	3.5 ~ 22.0	120	48 ~ 73	0 ~ 8	46	HDP-22		
3920 00122135			**-135**	3.5 ~ 22.0	135	48 ~ 73	0 ~ 8	46	HDP-22		
3920 00122150			**-150**	3.5 ~ 22.0	150	48 ~ 73	0 ~ 8	46	HDP-22		
3920 00122165			**-165**	3.5 ~ 22.0	165	48 ~ 73	0 ~ 8	46	HDP-22		
3920 00307090	**BT40**	**-SDM07**	**-90**	0.5 ~ 7.0	90	29 ~ 39	0 ~ 4	23	HDP-07A	FDC-07	S-0
3920 00307105			**-105**	0.5 ~ 7.0	105	29 ~ 54	0 ~ 4	23	HDP-07A		
3920 00307120			**-120**	0.5 ~ 7.0	120	29 ~ 54	0 ~ 4	23	HDP-07A		
3920 00307135			**-135**	0.5 ~ 7.0	135	29 ~ 54	0 ~ 4	23	HDP-07A		
3920 00307150			**-150**	0.5 ~ 7.0	150	29 ~ 54	0 ~ 4	23	HDP-07A		
3920 00309090	**BT40**	**-SDM09**	**-90**	2.5 ~ 9.0	90	28 ~ 38	0 ~ 4	26	HDP-09	FDC-09	S-1L
3920 00309105			**-105**	2.5 ~ 9.0	105	28 ~ 53	0 ~ 4	26	HDP-09		
3920 00309120			**-120**	2.5 ~ 9.0	120	28 ~ 53	0 ~ 4	26	HDP-09		
3920 00309135			**-135**	2.5 ~ 9.0	135	28 ~ 53	0 ~ 4	26	HDP-09		
3920 00309150			**-150**	2.5 ~ 9.0	150	28 ~ 53	0 ~ 4	26	HDP-09		
3920 00309180			**-180**	2.5 ~ 9.0	180	28 ~ 53	0 ~ 4	26	HDP-09		

Inch to Metric (mm) → Inch × 25.4
Metric (mm) to Inch → Metric ÷ 25.4 or Metric × 0.03937

Special / Custom Sizes on request

Unit : Metric

Code	Model			d	L	ℓ	B	D1	Nut	Collet	Spanner
3920 00312090	BT40	-SDM12	-90	2.5 ~ 12.0	90	34 ~ 44	0 ~ 5	32	HDP-12	FDC-12	S-3L
3920 00312105			-105	2.5 ~ 12.0	105	34 ~ 59	0 ~ 5	32	HDP-12		
3920 00312120			-120	2.5 ~ 12.0	120	34 ~ 59	0 ~ 5	32	HDP-12		
3920 00312135			-135	2.5 ~ 12.0	135	34 ~ 59	0 ~ 5	32	HDP-12		
3920 00312150			-150	2.5 ~ 12.0	150	34 ~ 59	0 ~ 5	32	HDP-12		
3920 00312180			-180	2.5 ~ 12.0	180	34 ~ 59	0 ~ 5	32	HDP-12		
3920 00316105	BT40	-SDM16	-105	3.5 ~ 16.0	105	40 ~ 50	0 ~ 6	36	HDP-16	FDC-16	S-4L
3920 00316120			-120	3.5 ~ 16.0	120	40 ~ 65	0 ~ 6	36	HDP-16		
3920 00316135			-135	3.5 ~ 16.0	135	40 ~ 65	0 ~ 6	36	HDP-16		
3920 00316150			-150	3.5 ~ 16.0	150	40 ~ 65	0 ~ 6	36	HDP-16		
3920 00316180			-180	3.5 ~ 16.0	180	40 ~ 65	0 ~ 6	36	HDP-16		
3920 00322120	BT40	-SDM22	-120	3.5 ~ 22.0	120	48 ~ 58	0 ~ 8	46	HDP-22	FDC-22	S-5L
3920 00322135			-135	3.5 ~ 22.0	135	48 ~ 73	0 ~ 8	46	HDP-22		
3920 00322150			-150	3.5 ~ 22.0	150	48 ~ 73	0 ~ 8	46	HDP-22		
3920 00322180			-180	3.5 ~ 22.0	180	48 ~ 73	0 ~ 8	46	HDP-22		
3920 00507090	BT50	-SDM07	-90	0.5 ~ 7.0	90	29 ~ 39	0 ~ 4	23	HDP-07A	FDC-07	S-0
3920 00507105			-105	0.5 ~ 7.0	105	29 ~ 54	0 ~ 4	23	HDP-07A		
3920 00507120			-120	0.5 ~ 7.0	120	29 ~ 54	0 ~ 4	23	HDP-07A		
3920 00507135			-135	0.5 ~ 7.0	135	29 ~ 54	0 ~ 4	23	HDP-07A		
3920 00507150			-150	0.5 ~ 7.0	150	29 ~ 54	0 ~ 4	23	HDP-07A		
3920 00507165			-165	0.5 ~ 7.0	165	29 ~ 54	0 ~ 4	23	HDP-07A		
3920 00509090	BT50	-SDM09	-90	2.5 ~ 9.0	90	28 ~ 38	0 ~ 4	26	HDP-09	FDC-09	S-1L
3920 00509105			-105	2.5 ~ 9.0	105	28 ~ 53	0 ~ 4	26	HDP-09		
3920 00509120			-120	2.5 ~ 9.0	120	28 ~ 53	0 ~ 4	26	HDP-09		
3920 00509135			-135	2.5 ~ 9.0	135	28 ~ 53	0 ~ 4	26	HDP-09		
3920 00509150			-150	2.5 ~ 9.0	150	28 ~ 53	0 ~ 4	26	HDP-09		
3920 00509180			-180	2.5 ~ 9.0	180	28 ~ 53	0 ~ 4	26	HDP-09		
3920 00512105	BT50	-SDM12	-105	2.5 ~ 12.0	105	34 ~ 44	0 ~ 5	32	HDP-12	FDC-12	S-3L
3920 00512120			-120	2.5 ~ 12.0	120	34 ~ 59	0 ~ 5	32	HDP-12		
3920 00512135			-135	2.5 ~ 12.0	135	34 ~ 59	0 ~ 5	32	HDP-12		
3920 00512150			-150	2.5 ~ 12.0	150	34 ~ 59	0 ~ 5	32	HDP-12		
3920 00512180			-180	2.5 ~ 12.0	180	34 ~ 59	0 ~ 5	32	HDP-12		
3920 00516105	BT50	-SDM16	-105	3.5 ~ 16.0	105	40 ~ 50	0 ~ 6	36	HDP-16	FDC-16	S-4L
3920 00516120			-120	3.5 ~ 16.0	120	40 ~ 65	0 ~ 6	36	HDP-16		
3920 00516135			-135	3.5 ~ 16.0	135	40 ~ 65	0 ~ 6	36	HDP-16		
3920 00516150			-150	3.5 ~ 16.0	150	40 ~ 65	0 ~ 6	36	HDP-16		
3920 00516180			-180	3.5 ~ 16.0	180	40 ~ 65	0 ~ 6	36	HDP-16		
3920 00522120	BT50	-SDM22	-120	3.5 ~ 22.0	120	48 ~ 58	0 ~ 8	46	HDP-22	FDC-22	S-5L
3920 00522135			-135	3.5 ~ 22.0	135	48 ~ 73	0 ~ 8	46	HDP-22		
3920 00522150			-150	3.5 ~ 22.0	150	48 ~ 73	0 ~ 8	46	HDP-22		
3920 00522180			-180	3.5 ~ 22.0	180	48 ~ 73	0 ~ 8	46	HDP-22		
3920 00522210			-210	3.5 ~ 22.0	210	48 ~ 73	0 ~ 8	46	HDP-22		

Collet
P. 086 - 089



Spanner
P. 095



1.Collet and spanner are sold separately.
2. ℓ is the dimension between the cap end and the preset screw top end.
3.See P.499 for standard Tightening Torque.

Ordering Example

BT40 - SDM 12 - 90

- BT40: Shank size
- 12: Max. collet I.D.
- 90: Projection length (L)

GDC·A

High-Precision Collet Holder (High-Balanced Type)

● Suitable for high speed rotation drilling, reaming, and finish endmilling.



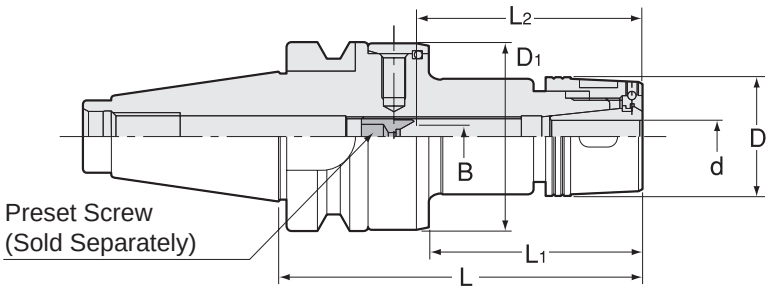

Unit : Metric

Code	Model	L	d	L1	L2	D	D1	kg	Nut	Collet	Spanner
2446 03007090	BT30 -GDC07A -90	90	0.5 ~ 7.0	53	22 ~ 45	23	46	0.6	HDP-07A	FDC-07AA	S-0
2446 03007105	-105	105	0.5 ~ 7.0	68	22 ~ 45	23	46	0.7	HDP-07A		
2446 03009090	BT30 -GDC09A -90	90	2.5 ~ 9.0	53	27 ~ 57	29	46	0.7	GDP-09	FDC-09AA	FK-0025
2446 03009105	-105	105	2.5 ~ 9.0	68	27 ~ 57	29	46	0.8	GDP-09		
2446 03012090	BT30 -GDC12A -90	90	2.5 ~ 12.0	53	33 ~ 69	34	46	0.8	GDP-12	FDC-12AA	FK-0034
2446 03012105	-105	105	2.5 ~ 12.0	68	33 ~ 69	34	46	0.9	GDP-12		
2446 03016090	BT30 -GDC16A -90	90	3.5 ~ 16.0	53	38 ~ 82	38	46	0.8	GDP-16	FDC-16AA	FK-0034
2446 03016120	-120	120	3.5 ~ 16.0	83	38 ~ 82	38	46	1.1	GDP-16		
2446 04007090	BT40 -GDC07A -90	90	0.5 ~ 7.0	48	22 ~ 45	23	62	1.4	HDP-07A	FDC-07AA	S-0
2446 04007120	-120	120	0.5 ~ 7.0	78	22 ~ 45	23	62	1.5	HDP-07A		
2446 04009090	BT40 -GDC09A -90	90	2.5 ~ 9.0	48	27 ~ 57	29	62	1.4	GDP-09	FDC-09AA	FK-0025
2446 04009120	-120	120	2.5 ~ 9.0	78	27 ~ 57	29	62	1.6	GDP-09		
2446 04012090	BT40 -GDC12A -90	90	2.5 ~ 12.0	48	33 ~ 69	34	62	1.5	GDP-12	FDC-12AA	FK-0034
2446 04012120	-120	120	2.5 ~ 12.0	78	33 ~ 69	34	62	1.7	GDP-12		
2446 04016090	BT40 -GDC16A -90	90	3.5 ~ 16.0	48	38 ~ 82	38	62	1.5	GDP-16	FDC-16AA	FK-0034
2446 04016120	-120	120	3.5 ~ 16.0	78	38 ~ 82	38	62	1.7	GDP-16		
2446 04022090	BT40 -GDC22A -90	90	3.5 ~ 22.0	48	47 ~ 103	49	62	1.5	GDP-22	FDC-22AA	FK-0045
2446 04022105	-105	105	3.5 ~ 22.0	63	47 ~ 103	49	62	1.7	GDP-22		
2446 04022135	-135	135	3.5 ~ 22.0	93	47 ~ 103	49	62	2.1	GDP-22		
2446 05007105	BT50 -GDC07A -105	105	0.5 ~ 7.0	52	22 ~ 45	23	84	4.1	HDP-07A	FDC-07AA	S-0
2446 05007135	-135	135	0.5 ~ 7.0	82	22 ~ 45	23	84	4.3	HDP-07A		
2446 05009105	BT50 -GDC09A -105	105	2.5 ~ 9.0	52	27 ~ 57	29	84	4.2	GDP-09	FDC-09AA	FK-0025
2446 05009135	-135	135	2.5 ~ 9.0	82	27 ~ 57	29	84	4.4	GDP-09		
2446 05012105	BT50 -GDC12A -105	105	2.5 ~ 12.0	52	33 ~ 69	34	84	4.3	GDP-12	FDC-12AA	FK-0034
2446 05012135	-135	135	2.5 ~ 12.0	82	33 ~ 69	34	84	4.5	GDP-12		
2446 05016105	BT50 -GDC16A -105	105	3.5 ~ 16.0	52	38 ~ 82	38	84	4.4	GDP-16	FDC-16AA	FK-0034
2446 05016135	-135	135	3.5 ~ 16.0	82	38 ~ 82	38	84	4.7	GDP-16		
2446 05022105	BT50 -GDC22A -105	105	3.5 ~ 22.0	52	47 ~ 103	49	84	4.4	GDP-22	FDC-22AA	FK-0045
2446 05022135	-135	135	3.5 ~ 22.0	82	47 ~ 103	49	84	4.8	GDP-22		

1.Collet, preset screw and spanner are sold separately.
2.Always use "AA" class collet.
3.Refer to P. 092 for minimum tool insertion length in case of using our coolant collets (OH,C or MS).
4.L2 indicates dimension when using with a preset screw.
5.See P.499 for standard Tightening Torque.

Collet P. 086 - 089
Spanner P. 095
Preset screw P. 094





Ordering Example

BT40 - GDC 09 A - 90
Shank size | Max. collet I.D. | Projection length (L)

Inch to Metric (mm) → Inch × 25.4
Metric (mm) to Inch → Metric ÷ 25.4 or Metric × 0.03937

Special / Custom Sizes on request

ERC

Collet Holder For Small Diameters

● For drilling in tight space.

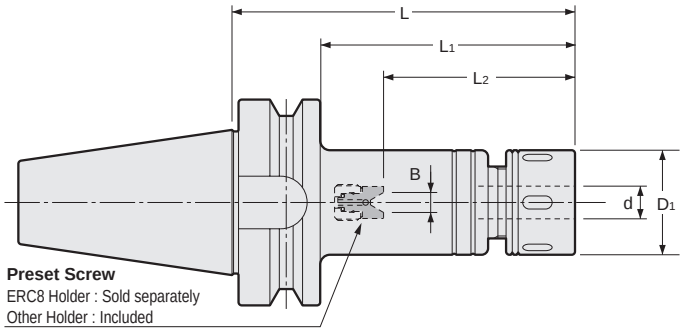

Unit : Inch

Code	Model	d	L	L1	B	L2	D1	kg	Preset Screw	Nut	Collet	Spanner
2550 000108045	BT30 -ERC8* -45	0.020~0.197	1.772	0.906	— (0~0.094)	1.299 (0.748~1.220)	0.472	0.40	ER8 (sold separately)	ERP-8	ER8	S-8E
2550 000108060	-60	0.020~0.197	2.362	1.496	— (0~0.094)	1.299 (0.748~1.220)	0.472	0.40				
2550 000108075	-75	0.020~0.197	2.953	2.087	— (0~0.094)	1.299 (0.748~1.220)	0.472	0.41				
2550 000108090	-90	0.020~0.197	3.543	2.677	— (0~0.094)	1.299 (0.748~1.220)	0.472	0.41				
2550 000108105	-105	0.020~0.197	4.134	3.268	— (0~0.094)	1.299 (0.748~1.220)	0.472	0.42				
2550 000108135	-135	0.020~0.197	5.315	4.449	— (0~0.094)	1.299 (0.748~1.220)	0.472	0.45				
2550 000110045	BT30 -ERC11S -45	0.020~0.276	1.772	0.906	0.0 ~ 0.157	0.866~1.457	0.630	0.40	HDS-07A-ES11	ERP-11S	ER11	S-11E
2550 000110060	-60	0.020~0.276	2.362	1.496	0.0 ~ 0.157	0.866~1.654	0.630	0.41				
2550 000110075	-75	0.020~0.276	2.953	2.087	0.0 ~ 0.157	0.866~1.654	0.630	0.43				
2550 000110090	-90	0.020~0.276	3.543	2.677	0.0 ~ 0.157	0.866~1.654	0.630	0.45				
2550 000110105	-105	0.020~0.276	4.134	3.268	0.0 ~ 0.157	0.866~1.654	0.630	0.46				
2550 000110135	-135	0.020~0.276	5.315	4.449	0.0 ~ 0.157	0.866~1.654	0.630	0.50				
2550 000111045	BT30 -ERC11 -45	0.020~0.276	1.772	0.906	0.0 ~ 0.157	0.866~1.457	0.906	0.43		HDP-07A		S-0
2550 000111060	-60	0.020~0.276	2.362	1.496	0.0 ~ 0.157	0.866~1.654	0.906	0.47				
2550 000111075	-75	0.020~0.276	2.953	2.087	0.0 ~ 0.157	0.866~1.654	0.906	0.50				
2550 000111090	-90	0.020~0.276	3.543	2.677	0.0 ~ 0.157	0.866~1.654	0.906	0.55				
2550 000111105	-105	0.020~0.276	4.134	3.268	0.0 ~ 0.157	0.866~1.654	0.906					
2550 000116060	BT30 -ERC16 -60	0.020~0.394	2.362	1.496	0.0 ~ 0.197	1.299~1.929	1.260	0.53	ES16	ERP-16	ER16	FK-0030
2550 000116075	-75	0.020~0.394	2.953	2.087	0.0 ~ 0.197	1.299~2.126	1.260	0.61				
2550 000116090	-90	0.020~0.394	3.543	2.677	0.0 ~ 0.197	1.299~2.126	1.260	0.70				
2550 000116105	-105	0.020~0.394	4.134	3.268	0.0 ~ 0.197	1.299~2.126	1.260	0.78				
2550 000120060	BT30 -ERC20 -60	0.020~0.512	2.362	1.496	0.0 ~ 0.236	1.496~2.047	1.378	0.53	HDS12A-ES20	ERP-20	ER20	FK-0034
2550 000120075	-75	0.020~0.512	2.953	2.087	0.0 ~ 0.236	1.496~2.638	1.378					
2550 000120090	-90	0.020~0.512	3.543	2.677	0.0 ~ 0.236	1.496~2.638	1.378	0.73				
2550 000120105	-105	0.020~0.512	4.134	3.268	0.0 ~ 0.236	1.496~2.638	1.378					

1. Collet and spanner are sold separately.
2. *ES8, a preset screw for ERC8, is sold separately. Other holder includes a standard preset screw.
3. " B " and " l " dimensions in brackets are for using ES8 preset screw.
4. Refer to P.092 for minimum tool insertion length in case of using our coolant collets.
5. See P.499 for standard Tightening Torque.

Collet P. 090-091

Spanner P. 095

Preset screw P. 094







Ordering Example

BT30 - **ERC** **8** - **105**

BT30: Shank size; 8: Max. collet I.D.; 105: Projection length (L)

Inch to Metric (mm) → Inch × 25.4
Metric (mm) to Inch → Metric ÷ 25.4 or Metric × 0.03937

Special / Custom Sizes on request

ERC

Collet Holder For Small Diameters

● For drilling in tight space.

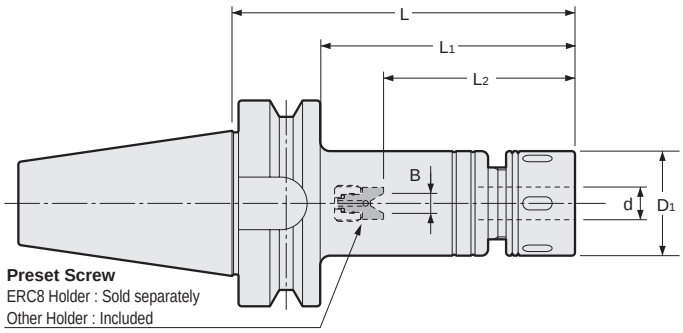

Unit : Inch

Code	Model	d	L	L1	B	L2	D1	kg	Preset Screw	Nut	Collet	Spanner
2550 000125060	BT30 -ERC25 -60	0.020~0.630	2.362	1.496	0.0 ~ 0.315	1.693~2.165	1.654	0.57	HDS16A-ES25	ERP-25	ER25	HS-1-16
2550 000125090	-90	0.020~0.630	3.543	2.677	0.0 ~ 0.315	1.693~3.150	1.654	0.85				
2550 000125105	-105	0.020~0.630	4.134	3.268	0.0 ~ 0.315	1.693~3.150	1.654	1.00				
2550 000125120	-120	0.020~0.630	4.724	3.858	0.0 ~ 0.315	1.693~3.150	1.654					
2550 000132060	BT30 -ERC32 -60	0.098~0.787	2.362	1.496	-	2.323	1.969		-	ERP-32	ER32	HS-2-20
2550 000132075	-75	0.098~0.787	2.953	2.087	-	2.913	1.969					
2550 000132090	-90	0.098~0.787	3.543	2.677	0.0 ~ 0.394	1.969~2.598	1.969		HDS22A-ER32			
2550 000132105	-105	0.098~0.787	4.134	3.268	0.0 ~ 0.394	1.969~3.189	1.969					
2550 000308060	BT40 -ERC8* -60	0.020~0.197	2.362	1.299	— (0~0.094)	1.299 (0.748~1.220)	0.472	0.98	ER8 (sold separately)	ERP-8	ER8	S-8E
2550 000308075	-75	0.020~0.197	2.953	1.890	— (0~0.094)	1.299 (0.748~1.220)	0.472	0.98				
2550 000308090	-90	0.020~0.197	3.543	2.480	— (0~0.094)	1.299 (0.748~1.220)	0.472	0.98				
2550 000308105	-105	0.020~0.197	4.134	3.071	— (0~0.094)	1.299 (0.748~1.220)	0.472	0.99				
2550 000308135	-135	0.020~0.197	5.315	4.252	— (0~0.094)	1.299 (0.748~1.220)	0.472	1.01				
2550 000310060	BT40 -ERC11S -60	0.020~0.276	2.362	1.299	0.0 ~ 0.157	0.866~1.654	0.630	0.99	HDS-07A-ES11	ERP-11S	ER11	S-11E
2550 000310075	-75	0.020~0.276	2.953	1.890	0.0 ~ 0.157	0.866~1.654	0.630	1.00				
2550 000310090	-90	0.020~0.276	3.543	2.480	0.0 ~ 0.157	0.866~1.654	0.630	1.00				
2550 000310105	-105	0.020~0.276	4.134	3.071	0.0 ~ 0.157	0.866~1.654	0.630	1.02				
2550 000310135	-135	0.020~0.276	5.315	4.252	0.0 ~ 0.157	0.866~1.654	0.630	1.06				
2550 000311075	BT40 -ERC11 -75	0.020~0.276	2.953	1.890	0.0 ~ 0.157	0.866~1.654	0.906	1.07		HDP-07A		S-0
2550 000311090	-90	0.020~0.276	3.543	2.480	0.0 ~ 0.157	0.866~1.654	0.906	1.10				
2550 000311105	-105	0.020~0.276	4.134	3.071	0.0 ~ 0.157	0.866~1.654	0.906	1.14				
2550 000316060	BT40 -ERC16 -60	0.020~0.394	2.362	1.299	0.0~0.197	1.299~2.126	1.260	1.09	ES16	ERP-16	ER16	FK-0030
2550 000316090	-90	0.020~0.394	3.543	2.480	0.0~0.197	1.299~2.126	1.260	1.24				
2550 000316105	-105	0.020~0.394	4.134	3.071	0.0~0.197	1.299~2.126	1.260	1.31				
2550 000316120	-120	0.020~0.394	4.724	3.661	0.0~0.197	1.299~2.126	1.260					
2550 000316135	-135	0.020~0.394	5.315	4.252	0.0~0.197	1.299~2.126	1.260	1.46				
2550 000316165	-165	0.020~0.394	6.496	5.433	0.0~0.197	1.299~2.126	1.260					
2550 000320060	BT40 -ERC20 -60	0.020~0.512	2.362	1.299	0.0~0.236	1.496~2.244	1.378		HDS12A-ES20	ERP-20	ER20	FK-0034
2550 000320090	-90	0.020~0.512	3.543	2.480	0.0~0.236	1.496~2.638	1.378					
2550 000320105	-105	0.020~0.512	4.134	3.071	0.0~0.236	1.496~2.638	1.378	1.37				
2550 000320120	-120	0.020~0.512	4.724	3.661	0.0~0.236	1.496~2.638	1.378					
2550 000320135	-135	0.020~0.512	5.315	4.252	0.0~0.236	1.496~2.638	1.378	1.55				
2550 000320165	-165	0.020~0.512	6.496	5.433	0.0~0.236	1.496~2.638	1.378					
2550 000320195	-195	0.020~0.512	7.677	6.614	0.0~0.236	1.496~2.638	1.378					
2550 000325090	BT40 -ERC25 -90	0.020~0.630	3.543	2.480	0.0~0.315	1.693~3.150	1.654	1.39	HDS16A-ES25	ERP-25	ER25	HS-1-16
2550 000325105	-105	0.020~0.630	4.134	3.071	0.0~0.315	1.693~3.150	1.654					
2550 000325120	-120	0.020~0.630	4.724	3.661	0.0~0.315	1.693~3.150	1.654					
2550 000325135	-135	0.020~0.630	5.315	4.252	0.0~0.315	1.693~3.150	1.654					
2550 000325165	-165	0.020~0.630	6.496	5.433	0.0~0.315	1.693~3.150	1.654					
2550 000325195	-195	0.020~0.630	7.677	6.614	0.0~0.315	1.693~3.150	1.654					

Inch to Metric (mm) → Inch × 25.4
Metric (mm) to Inch → Metric ÷ 25.4 or Metric × 0.03937

Special / Custom Sizes on request

Unit : Inch

Code	Model	d	L	L1	B	L2	D1	kg	Preset Screw	Nut	Collet	Spanner
2550 000332075	BT40 -ERC32 -75	0.098~0.787	2.953	1.890	0.0~0.394	1.969~2.795	1.969	1.28	HDS22A-ES32	ERP-32	ER32	HS-2-20
2550 000332105	-105	0.098~0.787	4.134	3.071	0.0~0.394	1.969~3.976	1.969	1.63				
2550 000332120	-120	0.098~0.787	4.724	3.661	0.0~0.394	1.969~3.976	1.969	1.84				
2550 000332135	-135	0.098~0.787	5.315	4.252	0.0~0.394	1.969~3.976	1.969					
2550 000332165	-165	0.098~0.787	6.496	5.433	0.0~0.394	1.969~3.976	1.969					
2550 000332195	-195	0.098~0.787	7.677	6.614	0.0~0.394	1.969~3.976	1.969					
2550 000340075	BT40 -ERC40 -75	0.118~1.024	2.953	1.890	-	3.386	2.480	1.26	-	ERP40	ER40	HS-2.5-25
2550 000340105	-105	0.118~1.024	4.134	3.071	0.0~0.551	2.632~3.504	2.480	1.92	ES40			
2550 000340150	-150	0.118~1.024	5.906	4.843	0.0~0.551	2.632~3.898	2.480					
2550 000511090	BT50 -ERC11 -90	0.020~0.276	3.543	2.047	0.0~0.157	0.866~1.654	0.906		HDS07A-ES11	HDP-07A	ER11	S-0
2550 000511105	-105	0.020~0.276	4.134	2.638	0.0~0.157	0.866~1.654	0.906					
2550 000511120	-120	0.020~0.276	4.724	3.228	0.0~0.157	0.866~1.654	0.906					
2550 000511135	-135	0.020~0.276	5.315	3.819	0.0~0.157	0.866~1.654	0.906					
2550 000511165	-165	0.020~0.276	6.496	5.000	0.0~0.157	0.866~1.654	0.906					
2550 000511195	-195	0.020~0.276	7.677	6.181	0.0~0.157	0.866~1.654	0.906					
2550 000516090	BT50 -ERC16 -90	0.020~0.394	3.543	2.047	0.0~0.197	1.299~2.126	1.260		ES16	ERP-16	ER16	FK-0030
2550 000516105	-105	0.020~0.394	4.134	2.638	0.0~0.197	1.299~2.126	1.260					
2550 000516120	-120	0.020~0.394	4.724	3.228	0.0~0.197	1.299~2.126	1.260					
2550 000516135	-135	0.020~0.394	5.315	3.819	0.0~0.197	1.299~2.126	1.260					
2550 000516165	-165	0.020~0.394	6.496	5.000	0.0~0.197	1.299~2.126	1.260					
2550 000516195	-195	0.020~0.394	7.677	6.181	0.0~0.197	1.299~2.126	1.260					
2550 000516225	-225	0.020~0.394	8.858	7.362	0.0~0.197	1.299~2.126	1.260					
2550 000516255	-255	0.020~0.394	10.039	8.543	0.0~0.197	1.299~2.126	1.260					
2550 000520090	BT50 -ERC20 -90	0.020~0.512	3.543	2.047	0.0~0.236	1.496~2.638	1.378	3.80	HDS12A-ES20	ERP-20	ER20	FK-0034
2550 000520105	-105	0.020~0.512	4.134	2.638	0.0~0.236	1.496~2.638	1.378					
2550 000520120	-120	0.020~0.512	4.724	3.228	0.0~0.236	1.496~2.638	1.378					
2550 000520135	-135	0.020~0.512	5.315	3.819	0.0~0.236	1.496~2.638	1.378	4.04				
2550 000520165	-165	0.020~0.512	6.496	5.000	0.0~0.236	1.496~2.638	1.378					
2550 000520195	-195	0.020~0.512	7.677	6.181	0.0~0.236	1.496~2.638	1.378					
2550 000520225	-225	0.020~0.512	8.858	7.362	0.0~0.236	1.496~2.638	1.378					
2550 000520255	-255	0.020~0.512	10.039	8.543	0.0~0.236	1.496~2.638	1.378	4.79				
2550 000525090	BT50 -ERC25 -90	0.020~0.630	3.543	2.047	0.0~0.315	1.693~3.150	1.654		HDS16A-ES25	ERP-25	ER25	HS-1-16
2550 000525105	-105	0.020~0.630	4.134	2.638	0.0~0.315	1.693~3.150	1.654					
2550 000525120	-120	0.020~0.630	4.724	3.228	0.0~0.315	1.693~3.150	1.654					
2550 000525135	-135	0.020~0.630	5.315	3.819	0.0~0.315	1.693~3.150	1.654					
2550 000525165	-165	0.020~0.630	6.496	5.000	0.0~0.315	1.693~3.150	1.654					
2550 000525195	-195	0.020~0.630	7.677	6.181	0.0~0.315	1.693~3.150	1.654					
2550 000525225	-225	0.020~0.630	8.858	7.362	0.0~0.315	1.693~3.150	1.654					
2550 000525255	-255	0.020~0.630	10.039	8.543	0.0~0.315	1.693~3.150	1.654					
2550 000532105	BT50 -ERC32 -105	0.098~0.787	4.134	2.638	0.0~0.394	1.969~3.976	1.969	4.11	HDS22A-ES32	ERP-32	ER32	HS-2-20
2550 000532120	-120	0.098~0.787	4.724	3.228	0.0~0.394	1.969~3.976	1.969					
2550 000532135	-135	0.098~0.787	5.315	3.819	0.0~0.394	1.969~3.976	1.969					
2550 000532165	-165	0.098~0.787	6.496	5.000	0.0~0.394	1.969~3.976	1.969	4.87				
2550 000532195	-195	0.098~0.787	7.677	6.181	0.0~0.394	1.969~3.976	1.969					
2550 000532225	-225	0.098~0.787	8.858	7.362	0.0~0.394	1.969~3.976	1.969					
2550 000532255	-255	0.098~0.787	10.039	8.543	0.0~0.394	1.969~3.976	1.969	5.99				
2550 000540105	BT50 -ERC40 -105	0.118~1.024	4.134	2.638	0.0~0.551	2.362~3.898	2.480	4.29	ES40	ERP-40	ER40	HS-2.5-25
2550 000540165	-165	0.118~1.024	6.496	5.000	0.0~0.551	2.362~3.898	2.480	5.58				
2550 000550105	BT50 -ERC50 -105	0.394~1.339	4.134	2.638	0.0~0.630	2.913~3.937	3.071		ES50	ERP-50	ER50	HS-4-42

1. Collet and spanner are sold separately.
2. *ES8, a preset screw for ERC8, is sold separately. Other holder includes a standard preset screw.
3. " B " and " l " dimensions in brackets are for using ES8 preset screw.
4. Refer to P.092 for minimum tool insertion length in case of using our coolant collets.
5. See P.499 for standard Tightening Torque.

Collet
P. 090-091



Spanner
P. 095



Preset screw
P. 094

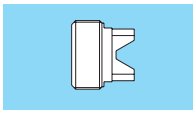

Ordering Example

BT40 - **ERC** **8** - **105**

BT40: Shank size; 8: Max. collet I.D.; 105: Projection length (L)

Inch to Metric (mm) → Inch × 25.4
Metric (mm) to Inch → Metric ÷ 25.4 or Metric × 0.03937

Special / Custom Sizes on request

ERC-T

Collet Holder For Small Diameters (Taper Type)

● For drilling in tight space.

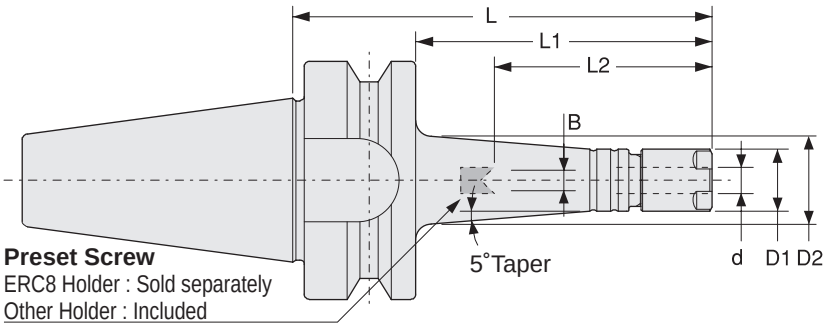

Unit : Metric

Code	Model	d	L	L1	B	L2	D1	D2	Nut	Collet	Spanner
2550 10108060	**BT30 -ERC8* -60T**	0.5 ~ 5.0	60	38	— (0 ~ 2.4)	34 (19 ~ 31)	12	14.5	ERP-8		
2550 10108075	**-75T**	0.5 ~ 5.0	75	53	— (0 ~ 2.4)	34 (19 ~ 31)	12	17.5	ERP-8		
2550 10108090	**-90T**	0.5 ~ 5.0	90	68	— (0 ~ 2.4)	34 (19 ~ 31)	12	20	ERP-8	ER8	S-8E
2550 10108105	**-105T**	0.5 ~ 5.0	105	83	— (0 ~ 2.4)	34 (19 ~ 31)	12	22.5	ERP-8		
2550 10108135	**-135T**	0.5 ~ 5.0	135	113	— (0 ~ 2.4)	34 (19 ~ 31)	12	28	ERP-8		
2550 10110060	**BT30 -ERC11S -60T**	0.5 ~ 7.0	60	38	0 ~ 4	22 ~ 45	16	18.5	ERP-11S		
2550 10110075	**-75T**	0.5 ~ 7.0	75	53	0 ~ 4	22 ~ 45	16	21	ERP-11S		
2550 10110090	**-90T**	0.5 ~ 7.0	90	68	0 ~ 4	22 ~ 45	16	24	ERP-11S	ER11	S-11E
2550 10110105	**-105T**	0.5 ~ 7.0	105	83	0 ~ 4	22 ~ 45	16	26.5	ERP-11S		
2550 10110135	**-135T**	0.5 ~ 7.0	135	113	0 ~ 4	22 ~ 45	16	31.5	ERP-11S		
2550 10308060	**BT40 -ERC8 -60T**	0.5 ~ 5.0	60	33	— (0 ~ 2.4)	34 (19 ~ 31)	12	14	ERP-8		
2550 10308075	**-75T**	0.5 ~ 5.0	75	48	— (0 ~ 2.4)	34 (19 ~ 31)	12	16.5	ERP-8		
2550 10308090	**-90T**	0.5 ~ 5.0	90	63	— (0 ~ 2.4)	34 (19 ~ 31)	12	19	ERP-8	ER8	S-8E
2550 10308105	**-105T**	0.5 ~ 5.0	105	78	— (0 ~ 2.4)	34 (19 ~ 31)	12	21.5	ERP-8		
2550 10308135	**-135T**	0.5 ~ 5.0	135	108	— (0 ~ 2.4)	34 (19 ~ 31)	12	27	ERP-8		
2550 10310060	**BT40 -ERC11S -60T**	0.5 ~ 7.0	60	33	0 ~ 4	22 ~ 45	16	17.5	ERP-11S		
2550 10310075	**-75T**	0.5 ~ 7.0	75	48	0 ~ 4	22 ~ 45	16	20.5	ERP-11S		
2550 10310090	**-90T**	0.5 ~ 7.0	90	63	0 ~ 4	22 ~ 45	16	23	ERP-11S	ER11	S-11E
2550 10310105	**-105T**	0.5 ~ 7.0	105	78	0 ~ 4	22 ~ 45	16	25.5	ERP-11S		
2550 10310135	**-135T**	0.5 ~ 7.0	135	108	0 ~ 4	22 ~ 45	16	31	ERP-11S		

1.Collet and spanner are sold separately.
2.*ES8, a preset screw for ERC8, is sold separately. ERC11S includes a standard preset screw HDS-07A-ES11.
3." B " and " L2 " dimensions in brackets are for using ES8 preset screw.
4.Refer to P. 092 for minimum tool insertion length in case of using our coolant collets.
5.See P.499 for standard Tightening Torque.

Collet P. 090-091
Spanner P. 095
Preset screw P. 094



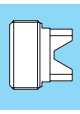

Ordering Example

BT40 - **ERC** **8** - **105** **T**

BT40: Shank size; 8: Max. collet I.D.; 105: Projection length (L)

Inch to Metric (mm) → Inch × 25.4
Metric (mm) to Inch → Metric ÷ 25.4 or Metric × 0.03937

Special / Custom Sizes on request

ST-HDC·A

Flex Chuck

● For drilling in tight space. Also suitable as sub-holder of milling chuck.

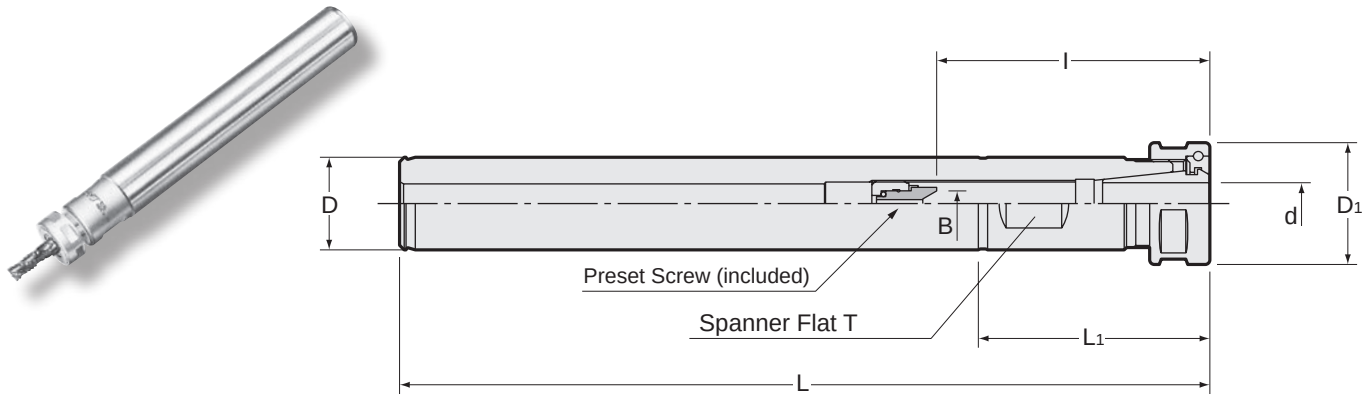

Metric Sizes (Shank)

Unit : Metric

Code	Model	d	$D^{0}_{-0.012}$	D1	L	L1	B	l	T	kg	Preset Screw	Nut	Collet	Spanner
0400 12009175	ST20 -HDC09A -175	2.5~9.0	20	26	175	50	0~4	27~56	17	0.4	HDS-09	HDP-09	FDC-09	S-1L
0400 13212185	ST32 -HDC12A -185	2.5~12.0	32	32	185	51	0~6	34~70	29	1.0	HDS-12	HDP-12	FDC-12	S-3L
0400 13212235	-235	2.5~12.0	32	32	235	51	0~6	34~70	29	1.2	HDS-12	HDP-12		

1.Collet, spanner, hexagon head preset screw, preset screw for semi-dry processing are sold separately. Standard preset screw is included.
2.Refer to P. 092 for minimum tool insertion length in case of using our coolant collets (OH,C or MS) and tool with tang.
3.See P.499 for standard Tightening Torque.

Ordering Example

ST20 - HDC 09 A - 175

ST20: Shank size; 09: Max. collet I.D.; 175: Projection length (L)

Inch Sizes (Shank)

Unit : Inch

Code	Model	d	$D^{0}_{-0.0005}$	D1	L	L1	B	l	T	kg	Preset Screw	Nut	Collet	Spanner
0400 22409175	ST0750 -HDC09A -175	0.098~ 0.354	0.750	1.024	6.890	1.969	0.0~ 0.157	1.063~ 2.126	0.669 (17mm)	0.4	HDS-09	HDP-09	FDC-09	S-1L
0400 24012185	ST1250 -HDC12A -185	0.098~ 0.472	1.250	1.260	7.283	2.008	0.0~ 0.236	1.338~ 2.598	1.142 (29mm)	1.0	HDS-12	HDP-12	FDC-12	S-3L
0400 24012235	-235	0.098~ 0.472	1.250	1.260	9.252	2.008	0.0~ 0.236	1.338~ 2.598	1.142 (29mm)		HDS-12	HDP-12		

1.Collet, spanner, hexagon head preset screw, preset screw for semi-dry processing are sold separately. Standard preset screw is included.
2.Refer to P. 092 for minimum tool insertion length in case of using our coolant collets (OH,C or MS) and tool with tang.
3.See P.499 for standard Tightening Torque.

Ordering Example

ST0750 - HDC 09 A - 175

ST0750: Shank size; 09: Max. collet I.D.; 175: Projection length (L)

Collet P. 086 - 089

Spanner P. 095

Preset screw P. 094

Inch to Metric (mm) → Inch × 25.4
Metric (mm) to Inch → Metric ÷ 25.4 or Metric × 0.03937

Special / Custom Sizes on request

ST-HDZ

"R"Zero Holder

● Collet holder with a runout adjustment function. Suitable for drilling in tight space as well as use for sub-holder of milling chuck.

Type1

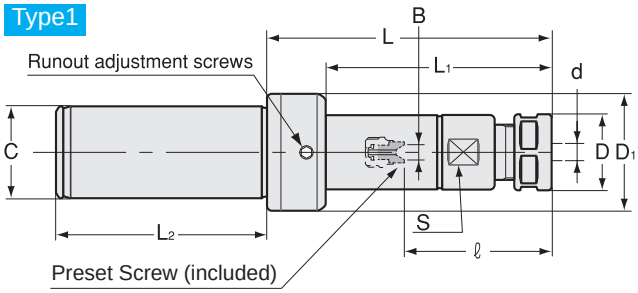

Type2

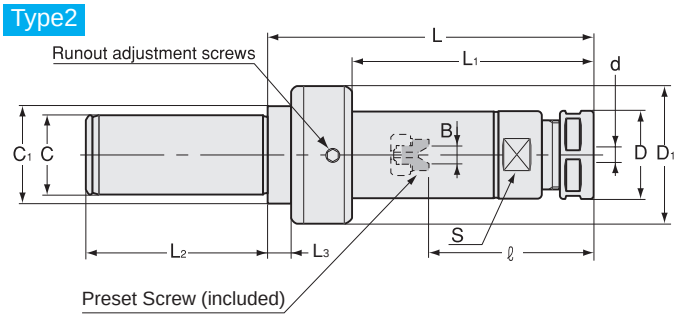

Metric Sizes (Shank)

Unit : Metric

Code	Model	Type	d	$C^{0}_{0.012}$	C1	L	L1	L2	L3	B	ℓ	D	D1	S	kg	Preset Screw	Nut	Collet	Spanner	Wrench
3100 02007075	ST20 -HDZ07 -75	2	0.5~7.0	20	28	75	44	57	10	0~4	22~45	23	41	19		HDS-07	HDP-07A			
3100 02007120	-120	2	0.5~7.0	20	28	120	89	57	10	0~4	22~45	23	41	19		HDS-07	HDP-07A	FDC-07	S-0	L-3T
3100 02007165	-165	2	0.5~7.0	20	28	165	134	57	10	0~4	22~45	23	41	19		HDS-07	HDP-07A			
3100 02009075	ST20 -HDZ09 -75	2	2.5~9.0	20	28	75	44	57	10	0~4	27~60	26	41	24	0.5	HDS-09	HDP-09			
3100 02009120	-120	2	2.5~9.0	20	28	120	89	57	10	0~4	27~60	26	41	24	0.6	HDS-09	HDP-09	FDC-09	S-1L	L-3T
3100 02009165	-165	2	2.5~9.0	20	28	165	134	57	10	0~4	27~60	26	41	24		HDS-09	HDP-09			
3100 03207060	ST32 -HDZ07 -60	1	0.5~7.0	32	—	60	39	70	—	0~4	22~45	23	41	19	0.7	HDS-07	HDP-07A			
3100 03207105	-105	1	0.5~7.0	32	—	105	84	70	—	0~4	22~45	23	41	19		HDS-07	HDP-07A	FDC-07	S-0	L-3T
3100 03207150	-150	1	0.5~7.0	32	—	150	129	70	—	0~4	22~45	23	41	19		HDS-07	HDP-07A			
3100 03209075	ST32 -HDZ09 -75	1	2.5~9.0	32	—	75	54	70	—	0~4	27~60	26	41	24		HDS-09	HDP-09			
3100 03209120	-120	1	2.5~9.0	32	—	120	99	70	—	0~4	27~60	26	41	24		HDS-09	HDP-09	FDC-09	S-1L	L-3T
3100 03209165	-165	1	2.5~9.0	32	—	165	144	70	—	0~4	27~60	26	41	24		HDS-09	HDP-09			
3100 03212090	ST32 -HDZ12 -90	2	2.5~12.0	32	40	90	55	70	10	0~5	33~69	32	52	30	1.0	HDS-12	HDP-12			
3100 03212135	-135	2	2.5~12.0	32	40	135	100	70	10	0~5	33~69	32	52	30	1.3	HDS-12	HDP-12	FDC-12	S-3L	L-4T
3100 03212180	-180	2	2.5~12.0	32	40	180	145	70	10	0~5	33~69	32	52	30		HDS-12	HDP-12			
3100 03216090	ST32 -HDZ16 -90	2	3.5~16.0	32	40	90	55	70	10	0~6	38~82	36	56	30	1.1	HDS-16	HDP-16			
3100 03216135	-135	2	3.5~16.0	32	40	135	100	70	10	0~6	38~82	36	56	30		HDS-16	HDP-16	FDC-16	S-4L	L-4T
3100 03216180	-180	2	3.5~16.0	32	40	180	145	70	10	0~6	38~82	36	56	30		HDS-16	HDP-16			
3100 03222105	ST32 -HDZ22 -105	2	3.5~22.0	32	40	105	64	70	7	0~8	47~73	46	69	42	1.6	HDS-22	HDP-22			
3100 03222150	-150	2	3.5~22.0	32	40	150	109	70	7	0~8	47~103	46	69	42	2.1	HDS-22	HDP-22	FDC-22	S-5L	L-5T
3100 03222195	-195	2	3.5~22.0	32	40	195	154	70	7	0~8	47~103	46	69	42		HDS-22	HDP-22			
3100 04212090	ST42 -HDZ12 -90	1	2.5~12.0	42	—	90	65	75	—	0~5	33~69	32	52	30		HDS-12	HDP-12			
3100 04212135	-135	1	2.5~12.0	42	—	135	110	75	—	0~5	33~69	32	52	30		HDS-12	HDP-12	FDC-12	S-3L	L-4T
3100 04212180	-180	1	2.5~12.0	42	—	180	155	75	—	0~5	33~69	32	52	30		HDS-12	HDP-12			
3100 04216090	ST42 -HDZ16 -90	1	3.5~16.0	42	—	90	65	75	—	0~6	38~82	36	56	30		HDS-16	HDP-16			
3100 04216135	-135	1	3.5~16.0	42	—	135	110	75	—	0~6	38~82	36	56	30		HDS-16	HDP-16	FDC-16	S-4L	L-4T
3100 04216180	-180	1	3.5~16.0	42	—	180	155	75	—	0~6	38~82	36	56	30		HDS-16	HDP-16			
3100 04222105	ST42 -HDZ22 -105	2	3.5~22.0	42	52	105	64	75	7	0~8	47~103	46	69	42		HDS-22	HDP-22			
3100 04222150	-150	2	3.5~22.0	42	52	150	109	75	7	0~8	47~103	46	69	42		HDS-22	HDP-22	FDC-22	S-5L	L-5T
3100 04222195	-195	2	3.5~22.0	42	52	195	154	75	7	0~8	47~103	46	69	42		HDS-22	HDP-22			

1.Collet, spanner, hexagon head preset screw, preset screw for semi-dry processing, and adjustment wrench are sold separately. Standard preset screw is included.
2.Refer to P. 092 for minimum tool insertion length in case of using our coolant collets (OH,C or MS).
3.ℓ indicates dimension when using with a preset screw.
4.See P.499 for standard Tightening Torque.

Collet
P. 086 - 089
Spanner
P. 095
Preset screw
P. 094
Adjustment wrench
P. 095

Ordering Example

ST32 - HDZ 12 - 90

ST32: Shank size; 12: Max. collet I.D.; 90: Projection length (L)

Inch to Metric (mm) → Inch × 25.4
Metric (mm) to Inch → Metric ÷ 25.4 or Metric × 0.03937

Special / Custom Sizes on request

Inch Sizes (Shank)

Unit : Inch

Code	Model	Type	d	C $^{0}_{-0.0005}$	C1	L	ℓ	L1	L2	L3	B	D	D1	S	kg	Preset Screw	Nut	Collet	Spanner	Wrench
3100 12407075	ST0750 -HDZ07 -75	2	0.020~0.276	0.750	1.102	2.953	0.866~1.772	1.732	2.24	0.39	0.0~0.157	0.906	1.614	0.748 (19mm)		HDS-07	HDP-07A	FDC-07	S-0	L-3T (3mm)
3100 12407120	-120	2	0.020~0.276	0.750	1.102	4.724	0.866~1.772	3.504	2.24	0.39	0.0~0.157	0.906	1.614	0.748 (19mm)	0.6	HDS-07	HDP-07A			
3100 12407165	-165	2	0.020~0.276	0.750	1.102	6.496	0.866~1.772	5.276	2.24	0.39	0.0~0.157	0.906	1.614	0.748 (19mm)		HDS-07	HDP-07A			
3100 12409075	ST0750 -HDZ09 -75	2	0.098~0.354	0.750	1.102	2.953	1.063~2.244	1.732	2.24	0.39	0.0~0.157	1.024	1.614	0.945 (24mm)		HDS-09	HDP-09	FDC-09	S-1L	
3100 12409120	-120	2	0.098~0.354	0.750	1.102	4.724	1.063~2.244	3.504	2.24	0.39	0.0~0.157	1.024	1.614	0.945 (24mm)		HDS-09	HDP-09			
3100 12409165	-165	2	0.098~0.354	0.750	1.102	6.496	1.063~2.244	5.276	2.24	0.39	0.0~0.157	1.024	1.614	0.945 (24mm)		HDS-09	HDP-09			
3100 14007060	ST1250 -HDZ07 -60	1	0.020~0.276	1.250	—	2.362	0.866~1.772	1.535	2.76	—	0.0~0.157	0.906	1.614	0.748 (19mm)		HDS-07	HDP-07A	FDC-07	S-0	L-3T (3mm)
3100 14007105	-105	1	0.020~0.276	1.250	—	4.134	0.866~1.772	3.307	2.76	—	0.0~0.157	0.906	1.614	0.748 (19mm)		HDS-07	HDP-07A			
3100 14007150	-150	1	0.020~0.276	1.250	—	5.906	0.866~1.772	5.079	2.76	—	0.0~0.157	0.906	1.614	0.748 (19mm)		HDS-07	HDP-07A			
3100 14009075	ST1250 -HDZ09 -75	1	0.098~0.354	1.250	—	2.953	1.063~2.244	2.126	2.76	—	0.0~0.157	1.024	1.614	0.945 (24mm)		HDS-09	HDP-09	FDC-09	S-1L	
3100 14009120	-120	1	0.098~0.354	1.250	—	4.724	1.063~2.244	3.898	2.76	—	0.0~0.157	1.024	1.614	0.945 (24mm)		HDS-09	HDP-09			
3100 14009165	-165	1	0.098~0.354	1.250	—	6.496	1.063~2.244	5.669	2.76	—	0.0~0.157	1.024	1.614	0.945 (24mm)		HDS-09	HDP-09			
3100 14012090	ST1250 -HDZ12 -90	2	0.098~0.472	1.250	1.575	3.543	1.299~2.677	2.165	2.76	0.39	0.0~0.197	1.260	2.047	1.811 (30mm)		HDS-12	HDP-12	FDC-12	S-3L	L-4T (4mm)
3100 14012135	-135	2	0.098~0.472	1.250	1.575	5.315	1.299~2.677	3.937	2.76	0.39	0.0~0.197	1.260	2.047	1.811 (30mm)		HDS-12	HDP-12			
3100 14012180	-180	2	0.098~0.472	1.250	1.575	7.087	1.299~2.677	5.709	2.76	0.39	0.0~0.197	1.260	2.047	1.811 (30mm)		HDS-12	HDP-12			
3100 14016090	ST1250 -HDZ16 -90	2	0.138~0.630	1.250	1.575	3.543	1.496~3.189	2.165	2.76	0.39	0.0~0.236	1.417	2.205	1.811 (30mm)	1.1	HDS-16	HDP-16	FDC-16	S-4L	
3100 14016135	-135	2	0.138~0.630	1.250	1.575	5.315	1.496~3.189	3.937	2.76	0.39	0.0~0.236	1.417	2.205	1.811 (30mm)	1.4	HDS-16	HDP-16			
3100 14016180	-180	2	0.138~0.630	1.250	1.575	7.087	1.496~3.189	5.709	2.76	0.39	0.0~0.236	1.417	2.205	1.811 (30mm)	1.7	HDS-16	HDP-16			
3100 14022105	ST1250 HDZ22 -105	2	0.318~0.866	1.250	1.575	4.134	1.850~2.874	2.520	2.76	0.28	0.0~0.315	1.811	2.717	1.654 (42mm)		HDS-22	HDP-22	FDC-22	S-5L	L-5T (5mm)
3100 14022150	-150	2	0.318~0.866	1.250	1.575	5.906	1.850~4.055	4.291	2.76	0.28	0.0~0.315	1.811	2.717	1.654 (42mm)		HDS-22	HDP-22			
3100 14022195	-195	2	0.318~0.866	1.250	1.575	7.677	1.850~4.055	6.063	2.76	0.28	0.0~0.315	1.811	2.717	1.654 (42mm)		HDS-22	HDP-22			

1.Collet, spanner, hexagon head preset screw, preset screw for semi-dry processing, and adjustment wrench are sold separately. Standard preset screw is included.
2.Refer to P. 092 for minimum tool insertion length in case of using our coolant collets (OH,C or MS).
3.ℓ indicates dimension when using with a preset screw.
4.See P.499 for standard tightening torque.

Collet P. 086 - 089



Spanner P. 095



Preset screw P. 094



Adjustment wrench P. 095



Ordering Example

ST1250 - **HDZ** **12** - **90**

- ST1250: Shank size
- 12: Max. collet I.D.
- 90: Projection length (L)

Inch to Metric (mm) → Inch × 25.4
Metric (mm) to Inch → Metric ÷ 25.4 or Metric × 0.03937

Special / Custom Sizes on request

ST-ERC

Collet Holder For Small Diameters

● Suitable for machining in tight space.

Type1 **Preset Screw**
ERC8 Holder : Sold separately
Other Holder : Included

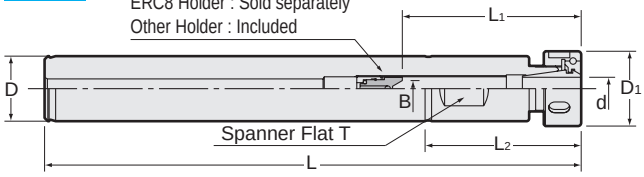

Type2 **Preset Screw**
ERC8 Holder : Sold separately
Other Holder : Included

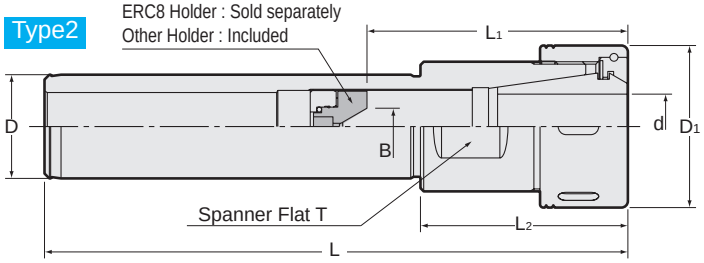

Metric Sizes (Shank)

Unit : Metric

Code	Model	Type	d	L	B	L1	L2	$D^{0}_{-0.012}$	D1	T	Preset Screw	Nut	kg	Collet	Spanner
0410 01208075	ST12 -ERC8* -75	1	0.5~5.0	75	— (0~2.4)	34 (19~31)	32	12	12	10	—	ERP-8	0.05	ER8	S-8E
0410 01208105	-105	1	0.5~5.0	105	— (0~2.4)	34 (19~31)	32	12	12	10	—	ERP-8	0.07		
0410 01208135	-135	1	0.5~5.0	135	— (0~2.4)	34 (19~31)	32	12	12	10	—	ERP-8	0.1		
0410 01610105	ST16 -ERC11S -105	1	0.5~7.0	105	0~4.0	22~45	35	16	16	14	HDS07A-ES11	ERP-11S	0.2	ER11	S-11E
0410 01610135	-135	1	0.5~7.0	135	0~4.0	22~45	35	16	16	14	HDS07A-ES11	ERP-11S	0.2		
0410 01610165	-165	1	0.5~7.0	165	0~4.0	22~45	35	16	16	14	HDS07A-ES11	ERP-11S	0.2		
0410 02011165	ST20 ERC11 -165	1	0.5~7.0	165	0~4.0	22~42	48	20	23	17	HDS07A-ES11	HDP-07A	0.4	ER11	S-0
0410 02016165	ST20 ERC16 -165	2	0.5~10.0	165	0~5.0	33~54	51	20	32	19	ES16	ERP-16	0.4	ER16	FK-0030
0410 03225180	ST32 ERC25 -180	1	0.5~16.0	180	0~8.0	43~80	59	32	42	29	HDS16A-ES25	ERP-25		ER25	HS-1-16
0410 03232180	ST32 ERC32 -180	2	2.0~20.0	180	0~10.0	50~101	64	32	50	36	HDS22A-ES32	ERP-32		ER32	HS-2-20

1. Collet and spanner are sold separately.
2. *ES8, a preset screw for ERC8, is sold separately. ERC11S includes a standard preset screw HDS-07A-ES11.
3. " B " and " L1 " dimensions in brackets are for using ES8 preset screw.
4. Refer to P. 092 for minimum tool insertion length in case of using our coolant collets.
5. See P.499 for standard Tightening Torque.

Ordering Example

ST12 - ERC 8 - 105
Shank size / Max. collet I.D. / Projection length (L)

Inch Sizes (Shank)

Unit : Inch

Code	Model	Type	d	L	B	L1	L2	$D^{0}_{-0.0005}$	D1	T	Preset Screw	Nut	kg	Collet	Spanner
0410 12411165	ST0750 ERC11 -165	1	0.020~ 0.276	6.496	0.0~ 0.157	0.866~ 1.654	1.890	0.750	0.906	0.669 (17mm)	HDS07A-ES11	HDP-07A	0.3	ER11	S-0
0410 12416165	ST0750 ERC16 -165	2	0.020~ 0.394	6.496	0.0~ 0.197	1.299~ 2.126	2.008	0.750	1.260	0.748 (19mm)	ES16	ERP-16		ER16	FK-0030
0410 14025180	ST1250 ERC25 -180	1	0.020~ 0.630	7.087	0.0~ 0.315	1.693~ 3.150	2.323	1.250	1.654	1.142 (29mm)	HDS16A-ES25	ERP-25		ER25	HS-1-16
0410 14032180	ST1250 ERC32 -180	2	0.079~ 0.787	7.087	0.0~ 0.394	1.969~ 3.976	2.520	1.250	1.969	1.417 (36mm)	HDS22A-ES32	ERP-32		ER32	HS-2-20

1.Collet and spanner are sold separately.
2.*ES8, a preset screw for ERC8, is sold separately. ERC11S includes a standard preset screw HDS-07A-ES11.
3." B " and " L1 " indicates dimension when using with a preset screw.
4.Refer to P. 092 for minimum tool insertion length in case of using our coolant collets.
5.See P.499 for standard Tightening Torque.

Ordering Example

ST0750 - ERC 11 - 105
Shank size / Max. collet I.D. / Projection length (L)

Collet P. 090-091
Spanner P. 095
Preset screw P. 094



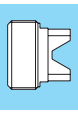

Inch to Metric (mm) → Inch × 25.4
Metric (mm) to Inch → Metric ÷ 25.4 or Metric × 0.03937

Special / Custom Sizes on request

MEMO

FDC

High-Precision Collet

Tool shank dia.		Model				
mm (inch)	inch	FDC-07	FDC-09	FDC-12	FDC-16	FDC-22
ϕ 1.0 ~ 0.5	ϕ 0.039 ~ 0.020	FDC-01007	—	—	—	—
ϕ 1.5 ~ 1.0	ϕ 0.059 ~ 0.039	FDC-01507	—	—	—	—
ϕ 2.0 ~ 1.5	ϕ 0.079 ~ 0.059	FDC-02007	—	—	—	—
ϕ 2.5 ~ 2.0	ϕ 0.098 ~ 0.079	FDC-02507	—	—	—	—
ϕ 3.0 ~ 2.5	ϕ 0.118 ~ 0.098	FDC-03007	FDC-03009	FDC-03012	—	—
ϕ 3.5 ~ 3.0 (1/8")	ϕ 0.138 ~ 0.118	FDC-03507	FDC-03509	FDC-03512	—	—
ϕ 4.0 ~ 3.5	ϕ 0.157 ~ 0.138	FDC-04007	FDC-04009	FDC-04012	FDC-04016	FDC-04022
ϕ 4.5 ~ 4.0	ϕ 0.177 ~ 0.157	FDC-04507	FDC-04509	FDC-04512	FDC-04516	FDC-04522
ϕ 5.0 ~ 4.5 (3/16")	ϕ 0.197 ~ 0.177	FDC-05007	FDC-05009	FDC-05012	FDC-05016	FDC-05022
ϕ 5.5 ~ 5.0	ϕ 0.217 ~ 0.197	FDC-05507	FDC-05509	FDC-05512	FDC-05516	FDC-05522
ϕ 6.0 ~ 5.5	ϕ 0.236 ~ 0.217	FDC-06007	FDC-06009	FDC-06012	FDC-06016	FDC-06022
ϕ 6.5 ~ 6.0 (1/4")	ϕ 0.256 ~ 0.236	FDC-06507	FDC-06509	FDC-06512	FDC-06516	FDC-06522
ϕ 7.0 ~ 6.5	ϕ 0.276 ~ 0.256	FDC-07007	FDC-07009	FDC-07012	FDC-07016	FDC-07022
ϕ 7.5 ~ 7.0	ϕ 0.295 ~ 0.276	—	FDC-07509	FDC-07512	FDC-07516	FDC-07522
ϕ 8.0 ~ 7.5 (5/16")	ϕ 0.315 ~ 0.295	—	FDC-08009	FDC-08012	FDC-08016	FDC-08022
ϕ 8.5 ~ 8.0	ϕ 0.335 ~ 0.315	—	FDC-08509	FDC-08512	FDC-08516	FDC-08522
ϕ 9.0 ~ 8.5	ϕ 0.354 ~ 0.335	—	FDC-09009	FDC-09012	FDC-09016	FDC-09022
ϕ 9.5 ~ 9.0	ϕ 0.374 ~ 0.354	—	—	FDC-09512	FDC-09516	FDC-09522
ϕ 10.0 ~ 9.5 (3/8")	ϕ 0.394 ~ 0.374	—	—	FDC-10012	FDC-10016	FDC-10022
ϕ 10.5 ~ 10.0	ϕ 0.413 ~ 0.394	—	—	FDC-10512	FDC-10516	FDC-10522
ϕ 11.0 ~ 10.5	ϕ 0.433 ~ 0.413	—	—	FDC-11012	FDC-11016	FDC-11022
ϕ 11.5 ~ 11.0 (7/16")	ϕ 0.453 ~ 0.433	—	—	FDC-11512	FDC-11516	FDC-11522
ϕ 12.0 ~ 11.5	ϕ 0.472 ~ 0.453	—	—	FDC-12012	FDC-12016	FDC-12022
ϕ 12.5 ~ 12.0	ϕ 0.492 ~ 0.472	—	—	—	FDC-12516	FDC-12522
ϕ 13.0 ~ 12.5 (1/2")	ϕ 0.512 ~ 0.492	—	—	—	FDC-13016	FDC-13022
ϕ 13.5 ~ 13.0	ϕ 0.531 ~ 0.512	—	—	—	FDC-13016	FDC-13022
ϕ 14.0 ~ 13.5	ϕ 0.551 ~ 0.531	—	—	—	FDC-14016	FDC-14022
ϕ 14.5 ~ 14.0	ϕ 0.571 ~ 0.551	—	—	—	FDC-14016	FDC-14022
ϕ 15.0 ~ 14.5	ϕ 0.591 ~ 0.571	—	—	—	FDC-15016	FDC-15022
ϕ 15.5 ~ 15.0	ϕ 0.610 ~ 0.591	—	—	—	FDC-15516	FDC-15522
ϕ 16.0 ~ 15.5 (5/8")	ϕ 0.630 ~ 0.610	—	—	—	FDC-16016	FDC-16022
ϕ 16.5 ~ 16.0	ϕ 0.650 ~ 0.630	—	—	—	—	FDC-16522
ϕ 17.0 ~ 16.5	ϕ 0.669 ~ 0.650	—	—	—	—	FDC-17022
ϕ 17.5 ~ 17.0	ϕ 0.689 ~ 0.669	—	—	—	—	FDC-17522
ϕ 18.0 ~ 17.5	ϕ 0.709 ~ 0.689	—	—	—	—	FDC-18022
ϕ 18.5 ~ 18.0	ϕ 0.728 ~ 0.709	—	—	—	—	FDC-18522
ϕ 19.0 ~ 18.5	ϕ 0.748 ~ 0.728	—	—	—	—	FDC-19022
ϕ 19.5 ~ 19.0 (3/4")	ϕ 0.768 ~ 0.748	—	—	—	—	FDC-19522
ϕ 20.0 ~ 19.5	ϕ 0.787 ~ 0.768	—	—	—	—	FDC-20022
ϕ 20.5 ~ 20.0	ϕ 0.807 ~ 0.787	—	—	—	—	FDC-20522
ϕ 21.0 ~ 20.5	ϕ 0.827 ~ 0.807	—	—	—	—	FDC-21022
ϕ 21.5 ~ 21.0	ϕ 0.846 ~ 0.827	—	—	—	—	FDC-21522
ϕ 22.0 ~ 21.5	ϕ 0.866 ~ 0.846	—	—	—	—	FDC-22022

Selection example of collet

To clamp φ10.0 tool shank, there are 2 collets, φ10.0 and φ10.5 collets.
We suggest you select φ10.0 collet for higher accuracy.
AA Collets collapse by 0.5mm.

Accuracy (4 × d)	
	AA (5μm)
	A (10μm)

Ordering Example

FDC - 060 12 AA

- 060: Max. chucking dia.
- 12: 12 Series
- AA: Accuracy

Inch to Metric (mm) → Inch × 25.4
Metric (mm) to Inch → Metric ÷ 25.4 or Metric × 0.03937

Special / Custom Sizes on request

FDC-OH

High-Precision Collet (For Tool With Coolant Hole)

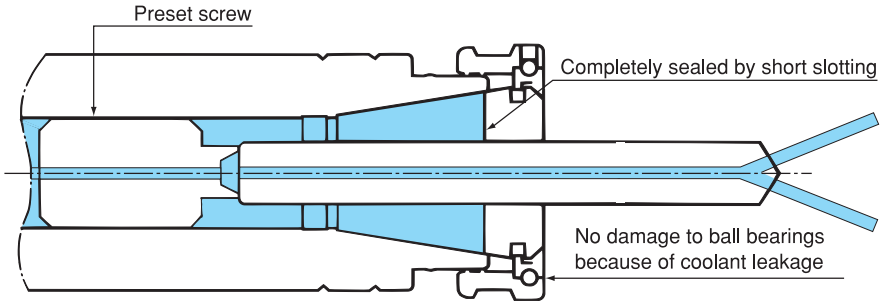



Tool shank dia.		Model				
mm (inch)	inch	FDC-07-OHAA	FDC-09-OHAA	FDC-12-OHAA	FDC-16-OHAA	FDC-22-OHAA
ϕ 3.0	ϕ 0.118	FDC-03007-OHAA	FDC-03009-OHAA	FDC-03012-OHAA	-	-
ϕ 3.2 (1/8")	ϕ 0.125	FDC-03207-OHAA	FDC-03209-OHAA	FDC-03212-OHAA	-	-
ϕ 3.5	ϕ 0.138	FDC-03507-OHAA	FDC-03509-OHAA	FDC-03512-OHAA	-	-
ϕ 4.0	ϕ 0.157	FDC-04007-OHAA	FDC-04009-OHAA	FDC-04012-OHAA	-	-
ϕ 4.2	ϕ 0.165	FDC-04207-OHAA	FDC-04209-OHAA	FDC-04212-OHAA	-	-
ϕ 4.5	ϕ 0.177	FDC-04507-OHAA	FDC-04509-OHAA	FDC-04512-OHAA	-	-
ϕ 4.8 (3/16")	ϕ 0.187	FDC-04807-OHAA	FDC-04809-OHAA	FDC-04812-OHAA	-	-
ϕ 5.0	ϕ 0.197	FDC-05007-OHAA	FDC-05009-OHAA	FDC-05012-OHAA	-	-
ϕ 5.5	ϕ 0.217	FDC-05507-OHAA	FDC-05509-OHAA	FDC-05512-OHAA	-	-
ϕ 6.0	ϕ 0.236	FDC-06007-OHAA	FDC-06009-OHAA	FDC-06012-OHAA	FDC-06016-OHAA	FDC-06022-OHAA
ϕ 6.4 (1/4")	ϕ 0.250	FDC-06407-OHAA	FDC-06409-OHAA	FDC-06412-OHAA	FDC-06416-OHAA	FDC-06422-OHAA
ϕ 6.5	ϕ 0.256	FDC-06507-OHAA	FDC-06509-OHAA	FDC-06512-OHAA	FDC-06516-OHAA	FDC-06522-OHAA
ϕ 6.8	ϕ 0.268	FDC-06807-OHAA	FDC-06809-OHAA	FDC-06812-OHAA	FDC-06816-OHAA	FDC-06822-OHAA
ϕ 7.0	ϕ 0.276	FDC-07007-OHAA	FDC-07009-OHAA	FDC-07012-OHAA	FDC-07016-OHAA	FDC-07022-OHAA
ϕ 7.5	ϕ 0.295	-	FDC-07509-OHAA	FDC-07512-OHAA	FDC-07516-OHAA	FDC-07522-OHAA
ϕ 8.0 (5/16")	ϕ 0.315	-	FDC-08009-OHAA	FDC-08012-OHAA	FDC-08016-OHAA	FDC-08022-OHAA
ϕ 8.5	ϕ 0.335	-	FDC-08509-OHAA	FDC-08512-OHAA	FDC-08516-OHAA	FDC-08522-OHAA
ϕ 9.0	ϕ 0.354	-	FDC-09009-OHAA	FDC-09012-OHAA	FDC-09016-OHAA	FDC-09022-OHAA
ϕ 9.5	ϕ 0.374	-	-	FDC-09512-OHAA	FDC-09516-OHAA	FDC-09522-OHAA
ϕ 9.6 (3/8")	ϕ 0.375	-	-	FDC-09612-OHAA	FDC-09616-OHAA	FDC-09622-OHAA
ϕ 10.0	ϕ 0.394	-	-	FDC-10012-OHAA	FDC-10016-OHAA	FDC-10022-OHAA
ϕ 10.2	ϕ 0.402	-	-	FDC-10212-OHAA	FDC-10216-OHAA	FDC-10222-OHAA
ϕ 10.5	ϕ 0.413	-	-	FDC-10512-OHAA	FDC-10516-OHAA	FDC-10522-OHAA
ϕ 11.0	ϕ 0.433	-	-	FDC-11012-OHAA	FDC-11016-OHAA	FDC-11022-OHAA
ϕ 11.2 (7/16")	ϕ 0.437	-	-	FDC-11212-OHAA	FDC-11216-OHAA	FDC-11222-OHAA
ϕ 11.5	ϕ 0.453	-	-	FDC-11512-OHAA	FDC-11516-OHAA	FDC-11522-OHAA
ϕ 12.0	ϕ 0.472	-	-	FDC-12012-OHAA	FDC-12016-OHAA	FDC-12022-OHAA
ϕ 12.5		-	-	-	FDC-12516-OHAA	FDC-12522-OHAA
ϕ 12.7 (1/2")	ϕ 0.500	-	-	-	FDC-12516-OHAA	FDC-12522-OHAA
ϕ 13.0	ϕ 0.512	-	-	-	FDC-13016-OHAA	FDC-13022-OHAA
ϕ 13.5		-	-	-	FDC-13516-OHAA	FDC-13522-OHAA
ϕ 14.0		-	-	-	FDC-14016-OHAA	FDC-14022-OHAA
ϕ 14.5		-	-	-	FDC-14516-OHAA	FDC-14522-OHAA
ϕ 15.0		-	-	-	FDC-15016-OHAA	FDC-15022-OHAA
ϕ 15.5		-	-	-	FDC-15516-OHAA	FDC-15522-OHAA
ϕ 16.0 (5/8")	ϕ 0.630	-	-	-	FDC-16016-OHAA	FDC-16022-OHAA
ϕ 16.5		-	-	-	-	FDC-16522-OHAA
ϕ 17.0		-	-	-	-	FDC-17022-OHAA
ϕ 17.5		-	-	-	-	FDC-17522-OHAA
ϕ 18.0	ϕ 0.709	-	-	-	-	FDC-18022-OHAA
ϕ 18.5		-	-	-	-	FDC-18522-OHAA
ϕ 19.0		-	-	-	-	FDC-19022-OHAA
ϕ 19.1 (3/4")	ϕ 0.750	-	-	-	-	FDC-19122-OHAA
ϕ 19.5		-	-	-	-	FDC-19522-OHAA
ϕ 20.0	ϕ 0.787	-	-	-	-	FDC-20022-OHAA
ϕ 20.5		-	-	-	-	FDC-20522-OHAA
ϕ 21.0		-	-	-	-	FDC-21022-OHAA
ϕ 21.5		-	-	-	-	FDC-21522-OHAA
ϕ 22.0	ϕ 0.866	-	-	-	-	FDC-22022-OHAA

1.OHAA Coolant collets collapse by 0.1mm.
2.Collet sizes not listed above are available upon request.

Accuracy (4 × d)	
	AA (5μm)
	A (10μm)

Ordering Example

FDC - 060 12 - OH AA

- 060: Max. chucking dia.
- 12: 12 Series
- AA: Accuracy

Inch to Metric (mm) → Inch × 25.4
Metric (mm) to Inch → Metric ÷ 25.4 or Metric × 0.03937

Special / Custom Sizes on request

FDC-C

High-Precision Collet (For Collet Through)

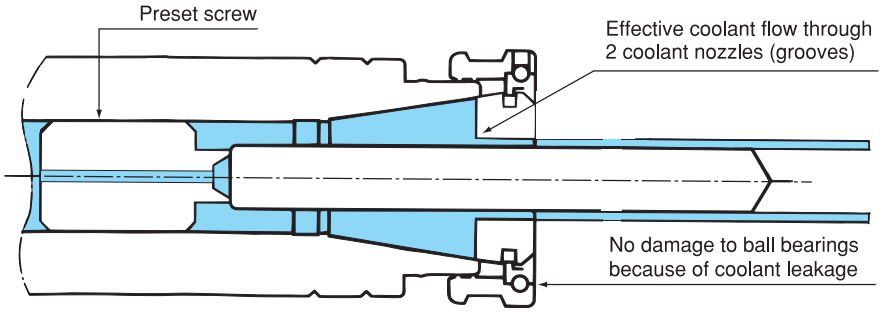



Tool shank dia.	Model				
	FDC-07-C ϕ 3 ~ ϕ 7 (mm) ϕ 0.118 ~ ϕ 0.276 (inch)	**FDC-09-C** ϕ 3 ~ ϕ 9 (mm) ϕ 0.118 ~ ϕ 0.354 (inch)	**FDC-12-C** ϕ 3 ~ ϕ 12 (mm) ϕ 0.118 ~ ϕ 0.472 (inch)	**FDC-16-C** ϕ 6 ~ ϕ 16 (mm) ϕ 0.236 ~ ϕ 0.630 (inch)	**FDC-22-C** ϕ 6 ~ ϕ 22 (mm) ϕ 0.236 ~ ϕ 0.866 (inch)
ϕ 3.0 (mm) ϕ 0.118 (inch) In 0.1mm increments ϕ 22.0 (mm) ϕ 0.866 (inch)	FDC-03007-C In 0.1mm increments FDC-07007-C	FDC-03009-C In 0.1mm increments FDC-09009-C	FDC-03012-C In 0.1mm increments FDC-12012-C	FDC-06016-C In 0.1mm increments FDC-16016-C	FDC-06022-C In 0.1mm increments FDC-22022-C

CAA Coolant collets collapse by 0.1mm.

Accuracy (4 × d)	
	AA (5μm)
	A (10μm)

Ordering Example

FDC - 060 12 - C AA

- 060: Max. chucking dia.
- 12: 12 Series
- AA: Accuracy

Inch to Metric (mm) → Inch × 25.4
Metric (mm) to Inch → Metric ÷ 25.4 or Metric × 0.03937

Special / Custom Sizes on request

FDC-MS

High-Precision Collet (For Semidry Machining /MQL)

● Making lubricant adhere to the surface of workpiece and tool by spraying comparatively large particles alongside the tool.

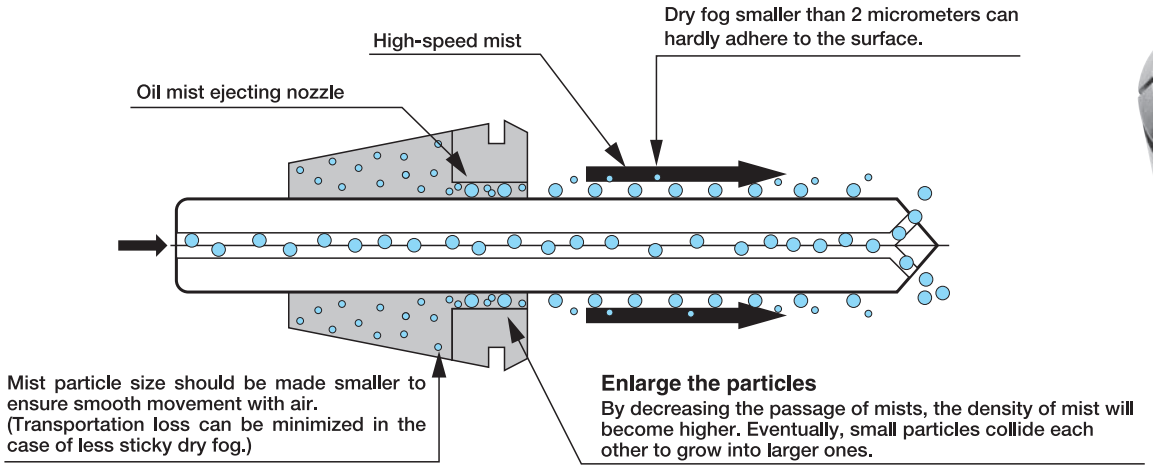



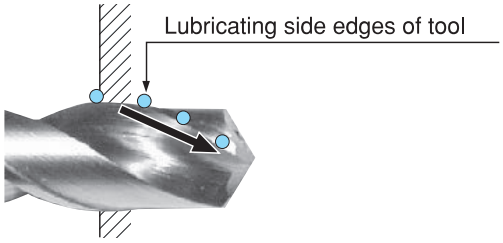

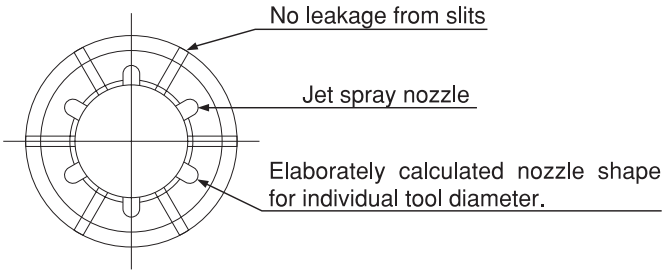

Tool shank dia.	Model				
	FDC-07-MS	FDC-09-MS	FDC-12-MS	FDC-16-MS	FDC-22-MS
ϕ 3.0	FDC-03007-MS	FDC-03009-MS	FDC-03012-MS	–	–
ϕ 4.0	FDC-04007-MS	FDC-04009-MS	FDC-04012-MS	–	–
ϕ 5.0	FDC-05007-MS	FDC-05009-MS	FDC-05012-MS	–	–
ϕ 6.0	–	FDC-06009-MS	FDC-06012-MS	FDC-06016-MS	FDC-06022-MS
ϕ 7.0	–	FDC-07009-MS	FDC-07012-MS	FDC-07016-MS	FDC-07022-MS
ϕ 8.0	–	FDC-08009-MS	FDC-08012-MS	FDC-08016-MS	FDC-08022-MS
ϕ 9.0	–	–	FDC-09012-MS	FDC-09016-MS	FDC-09022-MS
ϕ 10.0	–	–	FDC-10012-MS	FDC-10016-MS	FDC-10022-MS
ϕ 11.0	–	–	FDC-11012-MS	FDC-11016-MS	FDC-11022-MS
ϕ 12.0	–	–	FDC-12012-MS	FDC-12016-MS	FDC-12022-MS
ϕ 13.0	–	–	–	FDC-13016-MS	FDC-13022-MS
ϕ 14.0	–	–	–	FDC-14016-MS	FDC-14022-MS
ϕ 16.0	–	–	–	–	FDC-16022-MS
ϕ 20.0	–	–	–	–	FDC-20022-MS

1.MSAA Collets collapse by 0.1mm.
2.Sizes not listed above are available upon request.
3.Tools with or without coolant holes can be used.
4.Inch sizes are available.

Accuracy (4 × d)	
	AA (5μm)
	A (10μm)

Ordering Example

FDC - 060 12 MS AA

- 060: Max. chucking dia.
- 12: 12 Series
- MS
- AA: Accuracy

Inch to Metric (mm) → Inch × 25.4
Metric (mm) to Inch → Metric ÷ 25.4 or Metric × 0.03937

Special / Custom Sizes on request

ER

Collet For Small Diameters

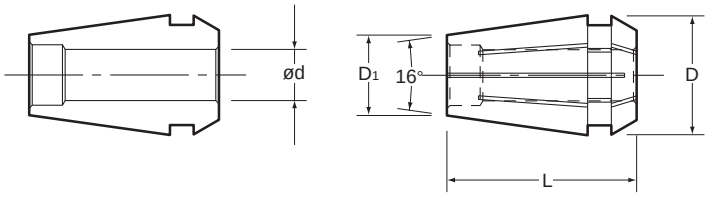

Selection example of ER8

To clamp φ3.0 tool shank, there are 2 collets, φ3.0 and φ3.5 collets. We suggest you select φ3.0 collet for higher accuracy.

Ordering Example

ER8 - 2.0 AA

2.0: Max. chucking dia.
AA: Accuracy

ER collet dimensional data

Type	D	D1	L	I.D.	
				inch	mm
ER8	0.331	0.217	0.535	ϕ 0.020-0.197	ϕ 0.5-5.0
ER11	0.406	0.307	0.709	ϕ 0.020-0.276	ϕ 0.5-7.0
ER16	0.677	0.445	1.063	ϕ 0.020-0.394	ϕ 0.5-10.0
ER20	0.835	0.571	1.220	ϕ 0.020-0.512	ϕ 0.5-13.0
ER25	1.031	0.728	1.378	ϕ 0.020-0.630	ϕ 0.5-16.0
ER32	1.307	0.961	1.575	ϕ 0.098-0.787	ϕ 2.5-20.0
ER40	1.622	1.228	1.811	ϕ 0.118-1.024	ϕ 3.0-26.0
ER50	2.067	1.539	2.362	ϕ 0.394-1.339	ϕ 10.0-34.0

AA is available.

I.D. mm		I.D. inch	ER8 AA	ER11 AA	ER16 A	ER20 A	ER25 A	ER32 A	ER40 A	ER50 A
ϕ 1.0 - 0.5		ϕ 0.039 - 0.020	ER8-1.0	ER11-1.0	ER16-1.0	ER20-1.0	ER25-1.0			
ϕ 1.5 - 1.0		ϕ 0.059 - 0.039	ER8-1.5	ER11-1.5	ER16-1.5	ER20-1.5	ER25-1.5			
ϕ 2.0 - 1.5		ϕ 0.079 - 0.059	ER8-2.0	ER11-2.0	ER16-2.0	ER20-2.0	ER25-2.0			
ϕ 2.5 - 2.0		ϕ 0.098 - 0.079	ER8-2.5	ER11-2.5	ER16-2.5	ER20-2.5	ER25-2.5			
ϕ 3.0 - 2.5		ϕ 0.118 - 0.098	ER8-3.0	ER11-3.0	ER16-3.0	ER20-3.0	ER25-3.0	ER32-3.0		
ϕ 3.5 - 3.0	(1/8")	ϕ 0.138 - 0.118	ER8-3.5	ER11-3.5	ER16-3.5	ER20-3.5	ER25-3.5	ER32-3.5		
ϕ 4.0 - 3.5		ϕ 0.157 - 0.138	ER8-4.0	ER11-4.0	ER16-4.0					
ϕ 4.5 - 4.0		ϕ 0.177 - 0.157	ER8-4.5	ER11-4.5	ER16-4.5					
ϕ 5.0 - 4.5	(3/16")	ϕ 0.197 - 0.177	ER8-5.0	ER11-5.0	ER16-5.0					
ϕ 5.5 - 5.0		ϕ 0.217 - 0.197		ER11-5.5	ER16-5.5					
ϕ 6.0 - 5.5		ϕ 0.236 - 0.217		ER11-6.0	ER16-6.0					
ϕ 6.5 - 6.0	(1/4")	ϕ 0.256 - 0.236		ER11-6.5	ER16-6.5					
ϕ 7.0 - 6.5		ϕ 0.276 - 0.256		ER11-7.0	ER16-7.0					
ϕ 7.5 - 7.0		ϕ 0.295 - 0.276			ER16-7.5					
ϕ 8.0 - 7.5	(5/16")	ϕ 0.315 - 0.295			ER16-8.0					
ϕ 8.5 - 8.0		ϕ 0.335 - 0.315			ER16-8.5					
ϕ 9.0 - 8.5		ϕ 0.354 - 0.335			ER16-9.0					
ϕ 9.5 - 9.0		ϕ 0.374 - 0.354			ER16-9.5					
ϕ 10.0 - 9.5	(3/8")	ϕ 0.394 - 0.374			ER16-10.0					
ϕ 4.0 - 3.0	(1/4")	ϕ 0.157 - 0.118				ER20-4.0	ER25-4.0	ER32-4.0	ER40-4.0	
ϕ 5.0 - 4.0	(3/16")	ϕ 0.197 - 0.157				ER20-5.0	ER25-5.0	ER32-5.0	ER40-5.0	
ϕ 6.0 - 5.0		ϕ 0.236 - 0.197				ER20-6.0	ER25-6.0	ER32-6.0	ER40-6.0	
ϕ 7.0 - 6.0	(1/4")	ϕ 0.276 - 0.236				ER20-7.0	ER25-7.0	ER32-7.0	ER40-7.0	
ϕ 8.0 - 7.0	(5/16")	ϕ 0.315 - 0.276				ER20-8.0	ER25-8.0	ER32-8.0	ER40-8.0	
ϕ 9.0 - 8.0		ϕ 0.354 - 0.315				ER20-9.0	ER25-9.0	ER32-9.0	ER40-9.0	
ϕ 10.0 - 9.0	(3/8")	ϕ 0.394 - 0.354				ER20-10.0	ER25-10.0	ER32-10.0	ER40-10.0	
ϕ 11.0 - 10.0		ϕ 0.433 - 0.394				ER20-11.0	ER25-11.0	ER32-11.0	ER40-11.0	ER50-12.0
ϕ 12.0 - 11.0		ϕ 0.472 - 0.433				ER20-12.0	ER25-12.0	ER32-12.0	ER40-12.0	
ϕ 13.0 - 12.0	(1/2")	ϕ 0.512 - 0.472				ER20-13.0	ER25-13.0	ER32-13.0	ER40-13.0	ER50-14.0
ϕ 14.0 - 13.0		ϕ 0.551 - 0.512					ER25-14.0	ER32-14.0	ER40-14.0	
ϕ 15.0 - 14.0		ϕ 0.591 - 0.551					ER25-15.0	ER32-15.0	ER40-15.0	ER50-16.0
ϕ 16.0 - 15.0	(5/8")	ϕ 0.630 - 0.591					ER25-16.0	ER32-16.0	ER40-16.0	
ϕ 17.0 - 16.0		ϕ 0.669 - 0.630						ER32-17.0	ER40-17.0	ER50-18.0
ϕ 18.0 - 17.0		ϕ 0.709 - 0.669						ER32-18.0	ER40-18.0	
ϕ 19.0 - 18.0		ϕ 0.748 - 0.709						ER32-19.0	ER40-19.0	ER50-20.0
ϕ 20.0 - 19.0	(3/4")	ϕ 0.787 - 0.748						ER32-20.0	ER40-20.0	
ϕ 21.0 - 20.0		ϕ 0.827 - 0.787							ER40-21.0	ER50-22.0
ϕ 22.0 - 21.0		ϕ 0.866 - 0.827							ER40-22.0	
ϕ 23.0 - 22.0	(7/8")	ϕ 0.906 - 0.866							ER40-23.0	ER50-24.0
ϕ 24.0 - 23.0		ϕ 0.945 - 0.906							ER40-24.0	
ϕ 25.0 - 24.0		ϕ 0.984 - 0.945							ER40-25.0	ER50-26.0
ϕ 26.0 - 25.0	(1")	ϕ 1.024 - 0.984							ER40-26.0	
ϕ 27.0 - 26.0		ϕ 1.063 - 1.024								ER50-28.0
ϕ 28.0 - 27.0		ϕ 1.102 - 1.063								
ϕ 29.0 - 28.0		ϕ 1.142 - 1.102								ER50-30.0
ϕ 30.0 - 29.0		ϕ 1.181 - 1.142								
ϕ 31.0 - 30.0		ϕ 1.220 - 1.181								ER50-32.0
ϕ 32.0 - 31.0	(1-1/4")	ϕ 1.260 - 1.220								
ϕ 33.0 - 32.0		ϕ 1.299 - 1.260								ER50-34.0
ϕ 34.0 - 33.0		ϕ 1.339 - 1.299								

Inch to Metric (mm) → Inch × 25.4
Metric (mm) to Inch → Metric ÷ 25.4 or Metric × 0.03937

Special / Custom Sizes on request

ER collet collapse range

Type	I.D.	Collapse Range	
ER8	1.0 - 5.0mm	0.020"	0.5mm
ER11	1.0 - 7.0mm	0.020"	0.5mm
ER16	1.0 - 10.0mm	0.020"	0.5mm

Type	I.D.	Collapse Range	
ER20	1.0 - 3.5mm	0.020"	0.5mm
	4.0 - 13.0mm	0.039"	1.0mm
ER25	1.0 - 3.5mm	0.020"	0.5mm
	4.0 - 16.0mm	0.039"	1.0mm

Type	I.D.	Collapse Range	
ER32	3.0 - 3.5mm	0.020"	0.5mm
	4.0 - 20.0mm	0.039"	1.0mm
ER40	4.0 - 26.0mm	0.039"	1.0mm
ER50	12.0 - 34.0mm	0.079"	2.0mm

ER-OH

For tool with coolant hole

Tool Shank Dia.		Model
		ER8-OH
mm	inch	Size
ϕ 1.8	ϕ 0.071	ER8-1.8-OH
ϕ 1.9	ϕ 0.075	ER8-1.9-OH
ϕ 2.0	ϕ 0.079	ER8-2.0-OH
ϕ 2.1	ϕ 0.083	ER8-2.1-OH
ϕ 2.2	ϕ 0.087	ER8-2.2-OH
ϕ 2.3	ϕ 0.091	ER8-2.3-OH
ϕ 2.4	ϕ 0.094	ER8-2.4-OH
ϕ 2.5	ϕ 0.098	ER8-2.5-OH
ϕ 2.6	ϕ 0.102	ER8-2.6-OH
ϕ 2.7	ϕ 0.106	ER8-2.7-OH
ϕ 2.8	ϕ 0.110	ER8-2.8-OH
ϕ 2.9	ϕ 0.114	ER8-2.9-OH
ϕ 3.0	ϕ 0.118	ER8-3.0-OH
ϕ 3.1	ϕ 0.122	ER8-3.1-OH
ϕ 3.2	ϕ 0.126	ER8-3.2-OH
ϕ 3.3	ϕ 0.130	ER8-3.3-OH
ϕ 3.4	ϕ 0.134	ER8-3.4-OH
ϕ 3.5	ϕ 0.138	ER8-3.5-OH
ϕ 3.6	ϕ 0.142	ER8-3.6-OH
ϕ 3.7	ϕ 0.146	ER8-3.7-OH
ϕ 3.8	ϕ 0.150	ER8-3.8-OH
ϕ 3.9	ϕ 0.154	ER8-3.9-OH
ϕ 4.0	ϕ 0.157	ER8-4.0-OH
ϕ 4.1	ϕ 0.161	ER8-4.1-OH
ϕ 4.2	ϕ 0.165	ER8-4.2-OH
ϕ 4.3	ϕ 0.169	ER8-4.3-OH
ϕ 4.4	ϕ 0.173	ER8-4.4-OH
ϕ 4.5	ϕ 0.177	ER8-4.5-OH
ϕ 4.6	ϕ 0.181	ER8-4.6-OH
ϕ 4.7	ϕ 0.185	ER8-4.7-OH
ϕ 4.8	ϕ 0.189	ER8-4.8-OH
ϕ 4.9	ϕ 0.193	ER8-4.9-OH
ϕ 5.0	ϕ 0.197	ER8-5.0-OH

Shrinkage allowance for coolant collet ER8-OH : 0.1mm

Tool Shank Dia.		Model
		ER11-OH
mm	inch	Size
ϕ 3.0	ϕ 0.118	ER11-3.0-OH
ϕ 3.2 (1/8")	ϕ 0.125	ER11-3.2-OH
ϕ 3.5	ϕ 0.138	ER11-3.5-OH
ϕ 4.0	ϕ 0.157	ER11-4.0-OH
ϕ 4.2	ϕ 0.165	ER11-4.2-OH
ϕ 4.5	ϕ 0.177	ER11-4.5-OH
ϕ 4.8 (3/16")	ϕ 0.187	ER11-4.8-OH
ϕ 5.0	ϕ 0.197	ER11-5.0-OH
ϕ 5.5	ϕ 0.217	ER11-5.5-OH
ϕ 6.0	ϕ 0.236	ER11-6.0-OH
ϕ 6.4 (1/4")	ϕ 0.250	ER11-6.4-OH
ϕ 6.5	ϕ 0.256	ER11-6.5-OH
ϕ 6.8	ϕ 0.268	ER11-6.8-OH
ϕ 7.0	ϕ 0.276	ER11-7.0-OH

Please contact NT USA for ER16 – ER50 coolant type.

Ordering Example

ER8 - 2.0 -OH AA

2.0: Max. chucking dia.
AA: Accuracy

ER-C

For Collet through

Tool Shank Dia.		Model
		ER8-C
mm	inch	Size
ϕ 1.8	ϕ 0.071	ER8-1.8-C
ϕ 1.9	ϕ 0.075	ER8-1.9-C
ϕ 2.0	ϕ 0.079	ER8-2.0-C
ϕ 2.1	ϕ 0.083	ER8-2.1-C
ϕ 2.2	ϕ 0.087	ER8-2.2-C
ϕ 2.3	ϕ 0.091	ER8-2.3-C
ϕ 2.4	ϕ 0.094	ER8-2.4-C
ϕ 2.5	ϕ 0.098	ER8-2.5-C
ϕ 2.6	ϕ 0.102	ER8-2.6-C
ϕ 2.7	ϕ 0.106	ER8-2.7-C
ϕ 2.8	ϕ 0.110	ER8-2.8-C
ϕ 2.9	ϕ 0.114	ER8-2.9-C
ϕ 3.0	ϕ 0.118	ER8-3.0-C
ϕ 3.1	ϕ 0.122	ER8-3.1-C
ϕ 3.2	ϕ 0.126	ER8-3.2-C
ϕ 3.3	ϕ 0.130	ER8-3.3-C
ϕ 3.4	ϕ 0.134	ER8-3.4-C
ϕ 3.5	ϕ 0.138	ER8-3.5-C
ϕ 3.6	ϕ 0.142	ER8-3.6-C
ϕ 3.7	ϕ 0.146	ER8-3.7-C
ϕ 3.8	ϕ 0.150	ER8-3.8-C
ϕ 3.9	ϕ 0.154	ER8-3.9-C
ϕ 4.0	ϕ 0.157	ER8-4.0-C
ϕ 4.1	ϕ 0.161	ER8-4.1-C
ϕ 4.2	ϕ 0.165	ER8-4.2-C
ϕ 4.3	ϕ 0.169	ER8-4.3-C
ϕ 4.4	ϕ 0.173	ER8-4.4-C
ϕ 4.5	ϕ 0.177	ER8-4.5-C
ϕ 4.6	ϕ 0.181	ER8-4.6-C
ϕ 4.7	ϕ 0.185	ER8-4.7-C
ϕ 4.8	ϕ 0.189	ER8-4.8-C
ϕ 4.9	ϕ 0.193	ER8-4.9-C
ϕ 5.0	ϕ 0.197	ER8-5.0-C

Shrinkage allowance for coolant collet ER8-C : 0.1mm

Tool Shank Dia.		Model
		ER11-C
mm	inch	Size
ϕ 3.0	ϕ 0.118	ER11-3.0-C
ϕ 3.2 (1/8")	ϕ 0.125	ER11-3.2-C
ϕ 3.5	ϕ 0.138	ER11-3.5-C
ϕ 4.0	ϕ 0.157	ER11-4.0-C
ϕ 4.2	ϕ 0.165	ER11-4.2-C
ϕ 4.5	ϕ 0.177	ER11-4.5-C
ϕ 4.8 (3/16")	ϕ 0.187	ER11-4.8-C
ϕ 5.0	ϕ 0.197	ER11-5.0-C
ϕ 5.5	ϕ 0.217	ER11-5.5-C
ϕ 6.0	ϕ 0.236	ER11-6.0-C
ϕ 6.4 (1/4")	ϕ 0.250	ER11-6.4-C
ϕ 6.5	ϕ 0.256	ER11-6.5-C
ϕ 6.8	ϕ 0.268	ER11-6.8-C
ϕ 7.0	ϕ 0.276	ER11-7.0-C

Please contact NT USA for ER16 – ER50 coolant type.

Ordering Example

ER8 - 2.0 -C AA

2.0: Max. chucking dia.
AA: Accuracy

Inch to Metric (mm) → Inch × 25.4
Metric (mm) to Inch → Metric ÷ 25.4 or Metric × 0.03937

Special / Custom Sizes on request

Minimum tool insertion length when coolant collet and tool with tang are used.

HDC·A, GDC·A, ERC, ERC-T, HDZ, GDZ, ERZ

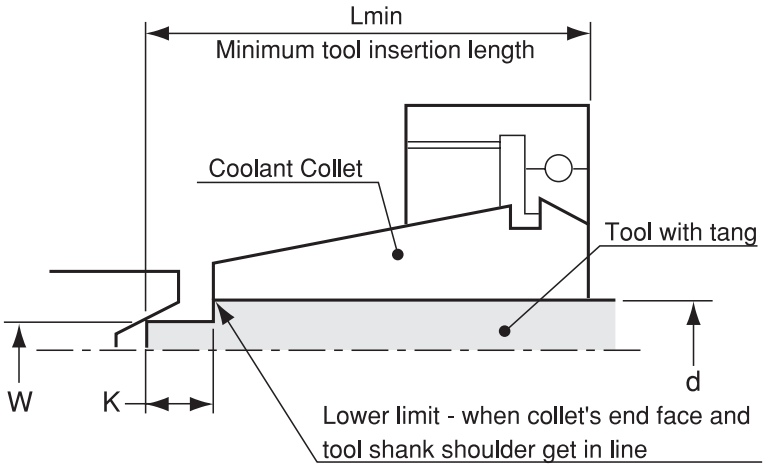

Unit : Metric

Collet size (OH,C,MS)	Chucking diameter	Geometry of cutting tool											
		Tool shank diameter	ø3.1~5.0		ø5.1~6.0		ø6.1~9.0		ø9.1~12.0		ø12.1~16.0		ø16.1~22.0	
		Tang width	2.4		3		4		5		6		8	
		Tang length	5	3	6	3	8	5	8	5	10	5	12	5
ER8	**ø1.8~5.0**	L min value when using tool with tang	20.5	19	–	–	–	–	–	–	–	–	–	–
ER11	**ø3.0~7.0**		23	22	24	22	26	23	–	–	–	–	–	–
FDC07	**ø3.0~7.0**		23	22	24	22	26	23	–	–	–	–	–	–
FDC09	**ø3.0~9.0**		28	27	29	27	31	28	–	–	–	–	–	–
FDC12	**ø3.0~12.0**		33	33	33.5	33	35.5	33	35.5	33	–	–	–	–
FDC16	**ø6.0~16.0**		–	–	38.5	38	40.5	38	40.5	38	42.5	38	–	–
FDC22	**ø6.0~22.0**		–	–	47	47	47.5	47	47.5	47	49.5	47	51.5	47

1.Chamfer at tool tang is NOT taken into account at all.
2.Coolant leakage will happen if minimum insertion length is not kept.
3.Minimum insertion length will vary according to tang length(K).

Inch to Metric (mm) → Inch × 25.4
Metric (mm) to Inch → Metric ÷ 25.4 or Metric × 0.03937

Special / Custom Sizes on request

Dimension for Collet and Nut

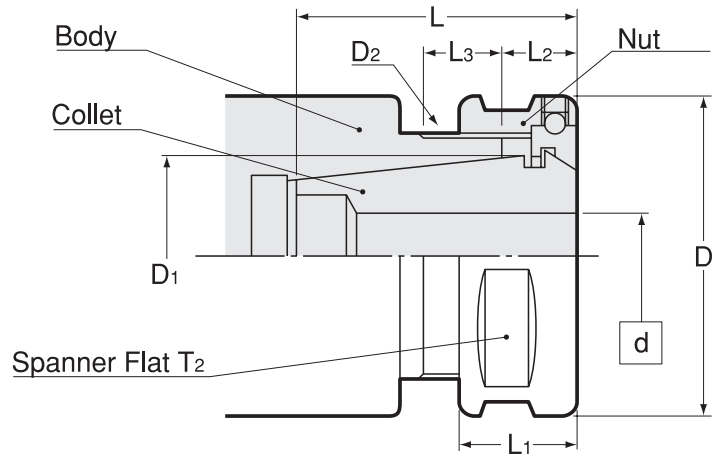

Unit : Metric

Model	Nut	Spanner	d	D	D1	D2	L	L1	L2	L3 MIN	T2
FDC - d 07	HDP-07A	S-0	0.5~7.0	23	10.9	M14 P=0.75	18.0	11.5	6.5	9	–
FDC - d 09	HDP-09	S-1L	2.5~9.0	26	13.57	M19 P=1	23.0	13.0	8.0	9	24
FDC - d 12	HDP-12	S-3L	2.5~12.0	32	18.42	M24 P=1	27.5	14.0	8.5	9	30
FDC - d 16	HDP-16	S-4L	3.5~16.0	36	22.2	M28 P=1	32.5	14.0	9.0	9	33
FDC - d 22	HDP-22	S-5L	3.5~22.0	46	30.6	M36 P=1	39.5	16.0	10.0	9	42

Dimension for body

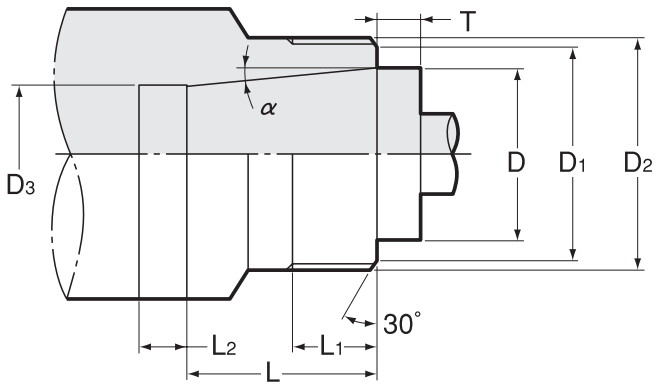

Unit : Metric

Model	Nut	D	T±0.1	D1	D2	(D3)	L	L1 MIN	(L2)	α
FDC - d 07	HDP-07A	10.9	4	13	M14 P=0.75	8.5	10	9.0	6	8°
FDC - d 09	HDP-09	13.57	5	17	M19 P=1	10.5	17	9.0	4	5°59′
FDC - d 12	HDP-12	18.42	5	22	M24 P=1	14.5	21	9.0	4	5°59′
FDC - d 16	HDP-16	22.2	5	26	M28 P=1	17.5	25	9.0	4	5°59′
FDC - d 22	HDP-22	30.6	5	34	M36 P=1	24.0	35	10	4	5°59′

D3 and L2 are for reference only and can be changed to your design. Contact us for taper gauge.

HDS, ES

Preset Screw

HDC·A, GDC·A, HDZ, GDZ

Standard

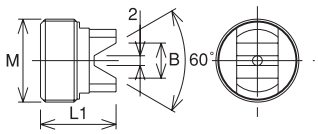

Unit : Metric

Code	Model	B	M	L1	Holder size
2545 00000007	**HDS-07**	5.5	M8 P=1	14	07
2545 00000009	**HDS-09**	5.5	M10 P=1	14	09
2545 00000012	**HDS-12**	7.2	M14 P=1	15.5	12
2545 00000016	**HDS-16**	7.2	M17 P=1	15.5	16
2545 00000022	**HDS-22**	9.5	M23 P=1	17.5	22

With hex. hole

Type1

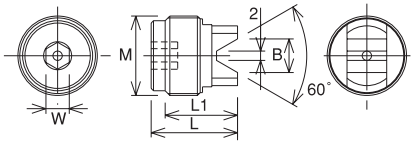

Type2

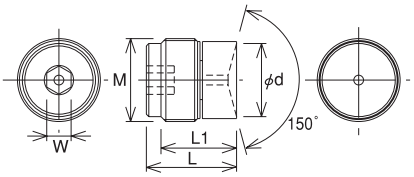

1. In case using drill less than ø2 for models with ＊, length adjustment function does not work since drill goes into coolant hole.
2. Max. adjustment range can be different from standard preset screw.

Unit : Metric

Code	Model	Type	W	B	ød	M	L	L1	Holder size
2545 30000007	**HDS-07-3**	1	3	5.5	–	M8 P=1	17	14	07
2545 40000007	**HDS-07-4**	1	4	5.5	–	M8 P=1	17	14	07
2545 30000009	**HDS-09-3**	1	3	5.5	–	M10 P=1	17	14	09
2545 40000009	**HDS-09-4**	1	4	5.5	–	M10 P=1	17	14	09
2545 50000009	**HDS-09-5**	1	5	5.5	–	M10 P=1	17	14	09
2545 30000012	**HDS-12-3**	1	3	7.2	–	M14 P=1	18.5	15.5	12
2545 40000012	**HDS-12-4**	1	4	7.2	–	M14 P=1	18.5	15.5	12
2545 50000012	**HDS-12-5**	1	5	7.2	–	M14 P=1	18.5	15.5	12
2545 30000016	**HDS-16-3**	1	3	7.2	–	M17 P=1	18.5	15.5	16
2545 40000016	**HDS-16-4**	1	4	7.2	–	M17 P=1	18.5	15.5	16
2545 50000016	**HDS-16-5**	1	5	7.2	–	M17 P=1	18.5	15.5	16
2545 30000022	**HDS-22-3**	1	3	9.5	–	M23 P=1	20.5	17.5	22
2545 40000022	**HDS-22-4**	1	4	9.5	–	M23 P=1	20.5	17.5	22
2545 50000022	**HDS-22-5**	1	5	9.5	–	M23 P=1	20.5	17.5	22
2545 31000007	**HDS-07-3C** ＊	2	3	–	6	M8 P=1	17	14	07
2545 41000007	**HDS-07-4C** ＊	2	4	–	6	M8 P=1	17	14	07
2545 31000009	**HDS-09-3C**	2	3	–	8	M10 P=1	17	14	09
2545 41000009	**HDS-09-4C**	2	4	–	8	M10 P=1	17	14	09
2545 51000009	**HDS-09-5C**	2	5	–	8	M10 P=1	17	14	09
2545 31000012	**HDS-12-3C**	2	3	–	12	M14 P=1	18.5	15.5	12
2545 41000012	**HDS-12-4C**	2	4	–	12	M14 P=1	18.5	15.5	12
2545 51000012	**HDS-12-5C**	2	5	–	12	M14 P=1	18.5	15.5	12
2545 31000016	**HDS-16-3C**	2	3	–	15	M17 P=1	18.5	15.5	16
2545 41000016	**HDS-16-4C**	2	4	–	15	M17 P=1	18.5	15.5	16
2545 51000016	**HDS-16-5C**	2	5	–	15	M17 P=1	18.5	15.5	16
2545 31000022	**HDS-22-3C**	2	3	–	21	M23 P=1	20.5	17.5	22
2545 41000022	**HDS-22-4C**	2	4	–	21	M23 P=1	20.5	17.5	22
2545 51000022	**HDS-22-5C**	2	5	–	21	M23 P=1	20.5	17.5	22

For semi-dry machining

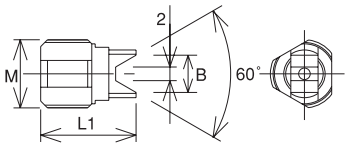

Unit : Metric

Code	Model	L	B	D	M	Holder size
3164 00000007	**HDS-07-MS**	14	5.5	7	M8 P=1	7
3164 00000009	**HDS-09-MS**	14	5.5	7	M10 P=1	9
3164 00000012	**HDS-12-MS**	15.5	7.2	12.8	M14 P=1	12
3164 00000016	**HDS-16-MS**	15.5	7.2	12.8	M17 P=1	16
3164 00000022	**HDS-22-MS**	17.5	9.5	18	M23 P=1	22

1.For cutting tool with or without oil hole.
2.Not applicable for cutting tools with less than ø3 shank diameter.

ERC, ERC-T, ERZ

ES**

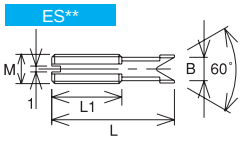

HDS**A-ES**

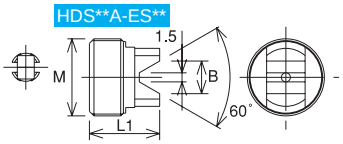

Unit : Metric

Code	Model	B	M	L	L1	Holder size
2555 00000008	**ES8**	4	M5 P=0.8	21	12	ERC8
2555 00070011	**HDS-07A-ES11**	5.5	M8 P=1	—	14.5	ERC11S, ERC11
2555 00000016	**ES16**	9.8	M11 P=1	—	14.5	ERC16
2555 00120020	**HDS12A-ES20**	12.8	M14 P=1	—	16	ERC20
2555 00160025	**HDS16A-ES25**	15.8	M17 P=1	—	16	ERC25
2555 00220032	**HDS22A-ES32**	20	M23 P=1	—	18	ERC32
2555 00000040	**ES40**	24	M31 P=1	—	21.5	ERC40
2555 00000050	**ES50**	26	M36 P=1	—	23	ERC50

Inch to Metric (mm) → Inch × 25.4
Metric (mm) to Inch → Metric ÷ 25.4 or Metric × 0.03937

Special / Custom Sizes on request

HDC·A, HDZ, SDM, KH-E

Collet		Nut		Spanner	
Model	Code	Model	Code	Model	Code
FDC-07	—	HDP-07A	0070 03001407	S-0	0803 00000000
FDC-09	—	HDP-09	2544 00000009	S-1L	0803 00000011
FDC-12	—	HDP-12	2544 00000012	S-3L	0803 00000013
FDC-16	—	HDP-16	2544 00000016	S-4L	0803 00000014
FDC-22	—	HDP-22	2544 00000022	S-5L	0803 00000015
FDC-32	—	HDP-32	0070 00105648	S-6	0803 00000006

S-** Spanner

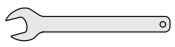

S-0, S-6 Spanner



GDC·A, GDZ

Collet		Nut		Spanner	
Model	Code	Model	Code	Model	Code
FDC-07AA	—	HDP-07A	0070 03001407	S-0	0803 00000000
FDC-09AA	—	GDP-09	2444 00000009	FK-0025	2445 00000025
FDC-12AA	—	GDP-12	2444 00000012	FK-0034	2445 00000034
FDC-16AA	—	GDP-16	2444 00000016	FK-0034	2445 00000034
FDC-22AA	—	GDP-22	2444 00000022	FK-0045	2445 00000045

S-0, FK-00** Spanner



ERC, ERC-T, ERZ

Collet		Nut		Spanner	
Model	Code	Model	Code	Model	Code
ER8	—	ERP-8	2554 00000008	S-8E	0803 00000007
ER11	—	ERP-11S	2554 00000010	S-11E	0803 00000008
ER11	—	HDP-07A	0070 03001407	S-0	0803 00000000
ER16	—	ERP-16	2554 00000016	FK-0034	2445 00000034
ER20	—	ERP-20	2554 00000020	FK-0034	2445 00000034
ER25	—	ERP-25	2554 00000025	HS-1-16	0711 00001016
ER32	—	ERP-32	2554 00000032	HS-2-20	0711 00002020
ER40	—	ERP-40	2554 00000040	HS-2.5-25	0711 00002525
ER50	—	ERP-50	2554 00000050	HS-4-42	0711 00004042

S-** Spanner



S-0, FK-00** Spanner
HS-**-** Spanner



Hex. Wrench

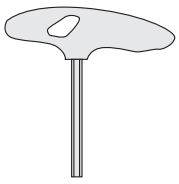

Model	Code
L-3T	6080 00000030
L-4T	6080 00115576
L-5T	6080 00115577
L-6T	6080 00115578

Spanner Head / Torque Wrench

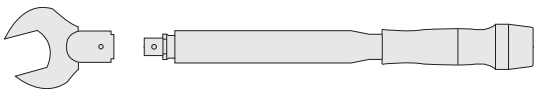

See P.499 for Spanner Head / Torque wrench.

Collet insertion and removal

1

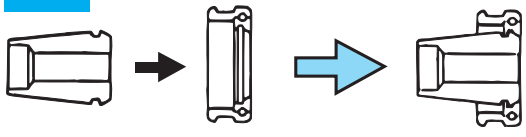

2



1. To attach
   Place FDC collet into threaded end of HDP nut. Press down on rear of the collet to "clip" the collet into the nut.
2. To remove
   While holding HDP nut firmly in one hand grasp FDC collet in the other while pushing sideways.

HDZ

"R"Zero Holder

● Runout accuracy of the cutting edge can be adjusted as closely as to zero.

Type1

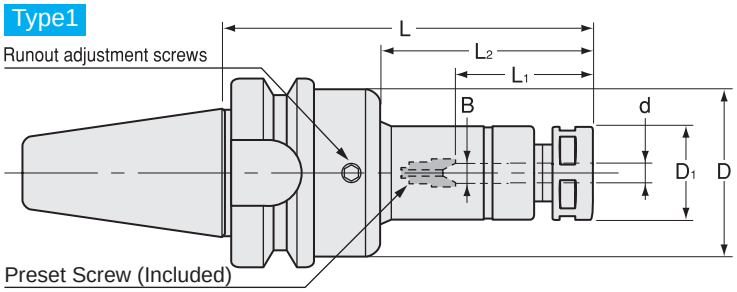

Type2

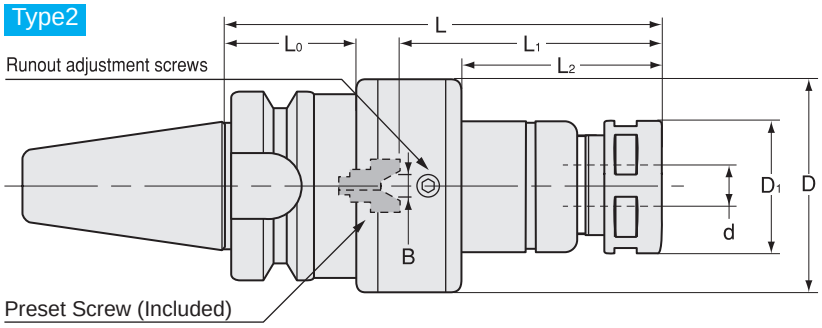



Unit : Metric

Code	Model	Type	d	L	L1	L2	B	D	D1	L0	Nut	kg	Collet	Spanner	Hex. Wrench
3090 10706000	BT30 -HDZ07 -60	1	0.5 ~ 7.0	60	22 ~ 45	22	0 ~ 4	41	23	–	HDP-07A	0.6	FDC-07	S-0	L-3T
3090 10707500	-75	1	0.5 ~ 7.0	75	22 ~ 45	37	0 ~ 4	41	23	–	HDP-07A	0.6			
3090 10709000	-90	1	0.5 ~ 7.0	90	22 ~ 45	52	0 ~ 4	41	23	–	HDP-07A	0.7			
3090 10710500	-105	1	0.5 ~ 7.0	105	22 ~ 45	67	0 ~ 4	41	23	–	HDP-07A	0.7			
3090 10907500	BT30 -HDZ09 -75	1	2.5 ~ 9.0	75	27 ~ 57	37	0 ~ 4	45	26	–	HDP-09	0.7	FDC-09	S-1L	L-3T
3090 10909000	-90	1	2.5 ~ 9.0	90	27 ~ 57	52	0 ~ 4	45	26	–	HDP-09	0.7			
3090 10910500	-105	1	2.5 ~ 9.0	105	27 ~ 57	67	0 ~ 4	45	26	–	HDP-09				
3090 11209000	BT30 -HDZ12 -90	2	2.5 ~ 12.0	90	33 ~ 69	33	0 ~ 5	52	32	32	HDP-12	1.0	FDC-12	S-3L	L-4T
3090 11210500	-105	2	2.5 ~ 12.0	105	33 ~ 69	48	0 ~ 5	52	32	32	HDP-12	1.1			
3090 11609000	BT30 -HDZ16 -90	2	3.5 ~ 16.0	90	38 ~ 82	33	0 ~ 6	56	36	32	HDP-16	1.0	FDC-16	S-4L	L-4T
3090 11610500	-105	2	3.5 ~ 16.0	105	38 ~ 82	48	0 ~ 6	56	36	32	HDP-16	1.1			
3090 11612000	-120	2	3.5 ~ 16.0	120	38 ~ 82	63	0 ~ 6	56	36	32	HDP-16				
3090 30707500	BT40 -HDZ07 -75	1	0.5 ~ 7.0	75	22 ~ 45	32	0 ~ 4	41	23	–	HDP-07A	1.2	FDC-07	S-0	L-3T
3090 30709000	-90	1	0.5 ~ 7.0	90	22 ~ 45	47	0 ~ 4	41	23	–	HDP-07A				
3090 30710500	-105	1	0.5 ~ 7.0	105	22 ~ 45	62	0 ~ 4	41	23	–	HDP-07A				
3090 30909000	BT40 -HDZ09 -90	1	2.5 ~ 9.0	90	27 ~ 57	47	0 ~ 4	45	26	–	HDP-09	1.3	FDC-09	S-1L	L-3T
3090 30910500	-105	1	2.5 ~ 9.0	105	27 ~ 57	62	0 ~ 4	45	26	–	HDP-09				
3090 30912000	-120	1	2.5 ~ 9.0	120	27 ~ 57	77	0 ~ 4	45	26	–	HDP-09				
3090 30913500	-135	1	2.5 ~ 9.0	135	27 ~ 57	92	0 ~ 4	45	26	–	HDP-09				
3090 30916500	-165	1	2.5 ~ 9.0	165	27 ~ 57	122	0 ~ 4	45	26	–	HDP-09				
3090 31209000	BT40 -HDZ12 -90	1	2.5 ~ 12.0	90	33 ~ 69	43	0 ~ 5	56	32	–	HDP-12	1.5	FDC-12	S-3L	L-4T
3090 31210500	-105	1	2.5 ~ 12.0	105	33 ~ 69	58	0 ~ 5	56	32	–	HDP-12	1.6			
3090 31212000	-120	1	2.5 ~ 12.0	120	33 ~ 69	73	0 ~ 5	56	32	–	HDP-12	1.6			
3090 31213500	-135	1	2.5 ~ 12.0	135	33 ~ 69	88	0 ~ 5	56	32	–	HDP-12	1.7			
3090 31216500	-165	1	2.5 ~ 12.0	165	33 ~ 69	118	0 ~ 5	56	32	–	HDP-12				
3090 31219500	-195	1	2.5 ~ 12.0	195	33 ~ 69	148	0 ~ 5	56	32	–	HDP-12	2.0			
3090 31609000	BT40 -HDZ16 -90	1	3.5 ~ 16.0	90	38 ~ 82	43	0 ~ 6	62	36	–	HDP-16	1.6	FDC-16	S-4L	L-4T
3090 31610500	-105	1	3.5 ~ 16.0	105	38 ~ 82	58	0 ~ 6	62	36	–	HDP-16	1.7			
3090 31612000	-120	1	3.5 ~ 16.0	120	38 ~ 82	73	0 ~ 6	62	36	–	HDP-16	1.8			
3090 31613500	-135	1	3.5 ~ 16.0	135	38 ~ 82	88	0 ~ 6	62	36	–	HDP-16	1.9			
3090 31616500	-165	1	3.5 ~ 16.0	165	38 ~ 82	118	0 ~ 6	62	36	–	HDP-16	2.1			
3090 31619500	-195	1	3.5 ~ 16.0	195	38 ~ 82	148	0 ~ 6	62	36	–	HDP-16				

Inch to Metric (mm) → Inch × 25.4
Metric (mm) to Inch → Metric ÷ 25.4 or Metric × 0.03937

Special / Custom Sizes on request

Unit : Metric

Code	Model	Type	d	L	L1	L2	B	D	D1	L0	Nut	kg	Collet	Spanner	Hex. Wrench
3090 32210500	BT40 -HDZ22 -105	2	3.5 ~ 22.0	105	47 ~ 103	31	0 ~ 8	69	46	45	HDP-22	2.1	FDC-22	S-5L	L-5T
3090 32212000	-120	2	3.5 ~ 22.0	120	47 ~ 103	46	0 ~ 8	69	46	45	HDP-22	2.3			
3090 32213500	-135	2	3.5 ~ 22.0	135	47 ~ 103	61	0 ~ 8	69	46	45	HDP-22	2.5			
3090 32216500	-165	2	3.5 ~ 22.0	165	47 ~ 103	91	0 ~ 8	69	46	45	HDP-22	2.8			
3090 32219500	-195	2	3.5 ~ 22.0	195	47 ~ 103	121	0 ~ 8	69	46	45	HDP-22				
3090 50709000	BT50 -HDZ07 -90	1	0.5 ~ 7.0	90	22 ~ 45	36	0 ~ 4	41	23	–	HDP-07	3.8	FDC-07A	S-0	L-3T
3090 50710500	-105	1	0.5 ~ 7.0	105	22 ~ 45	51	0 ~ 4	41	23	–	HDP-07				
3090 50712000	-120	1	0.5 ~ 7.0	120	22 ~ 45	66	0 ~ 4	41	23	–	HDP-07				
3090 50713500	-135	1	0.5 ~ 7.0	135	22 ~ 45	81	0 ~ 4	41	23	–	HDP-07				
3090 50716500	-165	1	0.5 ~ 7.0	165	22 ~ 45	111	0 ~ 4	41	23	–	HDP-07				
3090 50719500	-195	1	0.5 ~ 7.0	195	22 ~ 45	141	0 ~ 4	41	23	–	HDP-07				
3090 50909000	BT50 -HDZ09 -90	1	2.5 ~ 9.0	90	27 ~ 57	36	0 ~ 4	45	26	–	HDP-09		FDC-09	S-1L	L-3T
3090 50910500	-105	1	2.5 ~ 9.0	105	27 ~ 57	51	0 ~ 4	45	26	–	HDP-09	3.8			
3090 50912000	-120	1	2.5 ~ 9.0	120	27 ~ 57	66	0 ~ 4	45	26	–	HDP-09				
3090 50913500	-135	1	2.5 ~ 9.0	135	27 ~ 57	81	0 ~ 4	45	26	–	HDP-09				
3090 50916500	-165	1	2.5 ~ 9.0	165	27 ~ 57	111	0 ~ 4	45	26	–	HDP-09	4.1			
3090 50919500	-195	1	2.5 ~ 9.0	195	27 ~ 57	141	0 ~ 4	45	26	–	HDP-09				
3090 50922500	-225	1	2.5 ~ 9.0	225	27 ~ 57	171	0 ~ 4	45	26	–	HDP-09	4.3			
3090 50925500	-255	1	2.5 ~ 9.0	255	27 ~ 57	201	0 ~ 4	45	26	–	HDP-09	4.4			
3090 51209000	BT50 -HDZ12 -90	1	2.5 ~ 12.0	90	33 ~ 69	32	0 ~ 5	56	32	–	HDP-12	4.0	FDC-12	S-3L	L-4T
3090 51210500	-105	1	2.5 ~ 12.0	105	33 ~ 69	47	0 ~ 5	56	32	–	HDP-12				
3090 51212000	-120	1	2.5 ~ 12.0	120	33 ~ 69	62	0 ~ 5	56	32	–	HDP-12	4.1			
3090 51213500	-135	1	2.5 ~ 12.0	135	33 ~ 69	77	0 ~ 5	56	32	–	HDP-12				
3090 51216500	-165	1	2.5 ~ 12.0	165	33 ~ 69	107	0 ~ 5	56	32	–	HDP-12				
3090 51219500	-195	1	2.5 ~ 12.0	195	33 ~ 69	137	0 ~ 5	56	32	–	HDP-12				
3090 51222500	-225	1	2.5 ~ 12.0	225	33 ~ 69	167	0 ~ 5	56	32	–	HDP-12	4.6			
3090 51225500	-255	1	2.5 ~ 12.0	255	33 ~ 69	197	0 ~ 5	56	32	–	HDP-12	4.8			
3090 51609000	BT50 -HDZ16 -90	1	3.5 ~ 16.0	90	38 ~ 82	32	0 ~ 6	62	36	–	HDP-16	4.1	FDC-16	S-4L	L-4T
3090 51610500	-105	1	3.5 ~ 16.0	105	38 ~ 82	47	0 ~ 6	62	36	–	HDP-16	4.2			
3090 51612000	-120	1	3.5 ~ 16.0	120	38 ~ 82	62	0 ~ 6	62	36	–	HDP-16	4.3			
3090 51613500	-135	1	3.5 ~ 16.0	135	38 ~ 82	77	0 ~ 6	62	36	–	HDP-16	4.3			
3090 51616500	-165	1	3.5 ~ 16.0	165	38 ~ 82	107	0 ~ 6	62	36	–	HDP-16	4.5			
3090 51619500	-195	1	3.5 ~ 16.0	195	38 ~ 82	137	0 ~ 6	62	36	–	HDP-16	4.7			
3090 51622500	-225	1	3.5 ~ 16.0	225	38 ~ 82	167	0 ~ 6	62	36	–	HDP-16	4.9			
3090 51625500	-255	1	3.5 ~ 16.0	255	38 ~ 82	197	0 ~ 6	62	36	–	HDP-16	5.1			
3090 52210500	BT50 -HDZ22 -105	1	3.5 ~ 22.0	105	47 ~ 103	43	0 ~ 8	76	46	–	HDP-22	4.5	FDC-22	S-5L	L-5T
3090 52212000	-120	1	3.5 ~ 22.0	120	47 ~ 103	58	0 ~ 8	76	46	–	HDP-22	4.6			
3090 52213500	-135	1	3.5 ~ 22.0	135	47 ~ 103	73	0 ~ 8	76	46	–	HDP-22	4.8			
3090 52215000	-150	1	3.5 ~ 22.0	150	47 ~ 103	88	0 ~ 8	76	46	–	HDP-22	5.0			
3090 52216500	-165	1	3.5 ~ 22.0	165	47 ~ 103	103	0 ~ 8	76	46	–	HDP-22	5.1			
3090 52219500	-195	1	3.5 ~ 22.0	195	47 ~ 103	133	0 ~ 8	76	46	–	HDP-22	5.4			
3090 52222500	-225	1	3.5 ~ 22.0	225	47 ~ 103	163	0 ~ 8	76	46	–	HDP-22	5.7			
3090 52225500	-255	1	3.5 ~ 22.0	255	47 ~ 103	193	0 ~ 8	76	46	–	HDP-22	6.0			

1.Collet, spanner, hexagon head preset screw, preset screw for semi-dry processing, and hex. wrench are sold separately. Standard preset screw is included.
2.Refer to P. 092 for minimum tool insertion length in case of using our coolant collets (OH,C or MS).
3.L1 indicates dimension when using with a preset screw.
4.See P.499 for standard Tightening Torque.

Collet P. 086 - 089

Spanner P. 095

Preset screw P. 094

Hex.Wrench P. 095





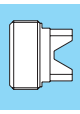



Ordering Example

BT40 - **HDZ** **12** - **90**

- BT40: Shank size
- 12: Max. collet I.D.
- 90: Projection length (L)

Inch to Metric (mm) → Inch × 25.4
Metric (mm) to Inch → Metric ÷ 25.4 or Metric × 0.03937

Special / Custom Sizes on request

CTZ

"R"Zero Holder for Large Diamater

● Runout of the cutting edge can be adjusted as close as to zero.Suitable for large diameter reaming.

Type1

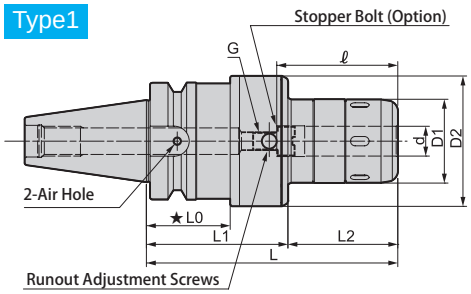

Type2

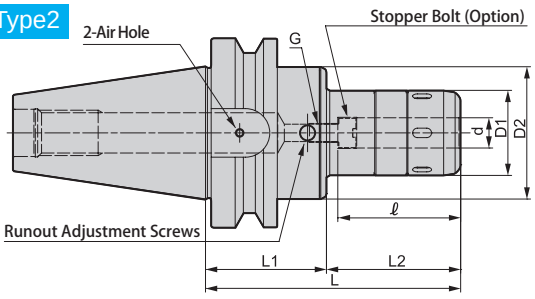



⚠ Caution
★ Take caution against A.T.C. arm and tool magazine interference.

Caution
Please rotate the clamping ring counterclockwise more than 360 degrees after a cutting tool is removed.

Metric Sizes

Unit : Metric

Code	Model	Type	d	L	L1	L2	D1	D2	L0	ℓ	G P=1.0	Spanner	Hex. Wrench
295010325125	BT40 -CTZ25A -125	1	25	125	64	61	61	74	★ 38	80	12	HS-2.5-25	L-6L (Included)
295010325150	-150	1	25	150	74	76	61	74	48	80	12		
295010332125	BT40 -CTZ32A -125	1	32	125	64	61	68	80	★ 35	110	18	HS-3-32	
295010332150	-150	1	32	150	74	76	68	80	45	120	18		
295010525125	BT50 -CTZ25A -125	2	25	125	64	61	61	74	–	80	12	HS-2.5-25	
295010525165	-165	2	25	165	64	101	61	74	–	80	12		
295010532125	BT50 -CTZ32A -125	2	32	125	64	61	68	80	–	120	18	HS-3-32	
295010532165	-165	2	32	165	64	101	68	80	–	120	18		
295000542125	BT50 -CTZ42 -125	2	42	125	64	61	88	99	–	120	18	HS-4-42	
295000542165	-165	2	42	165	64	101	88	99	–	120	18		

1.When ordering, indicate number of spanners required. “No charge” spanners are limited to number of holders on order.
2.Hex. wrench is included.
3.All accessories including straight collets can be used with above holders.
4.Use 2pcs. of M4 × 5(S)hex. screw (included) to close air holes on the holder when internal coolant is used.

Ordering Example

BT40 - CTZ 32 A - 125
BT40: Shank size; 32: I.D. (d); 125: Projection length (L)

Spanner
P. 069



Stopper Bolt	Straight Collet		Morse Taper Adapter		Jacobs Adapter	
BL (P.068)	MC (P.066)	MCA (P.067)	MA (P.068)	MAB (P.068)	JA (P.069)	JAB (P.069)

Min. chucking length

Direct Chucking (without MC Collet)

I.D.of Chuck	Min. chucking length
25,32,42	50

With MC Collet

Collet I.D.	Min. chucking length	
	MC	MC-C、MC-OH
6,8	30	30
10,12	40	40
16,20	45	45
25	50	50
32	50	50

Inch to Metric (mm) → Inch × 25.4
Metric (mm) to Inch → Metric ÷ 25.4 or Metric × 0.03937

Special / Custom Sizes on request

MEMO

GDZ

"R"Zero Holder (High-Balanced Type)

● Runout accuracy of the cutting edge can be adjusted as closely as to zero. (High balanced type for higher RPM)

Type1

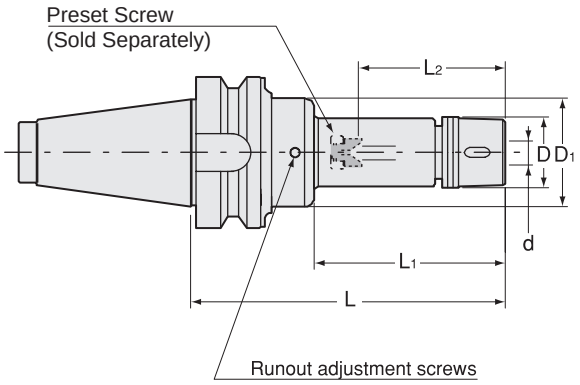

Type2

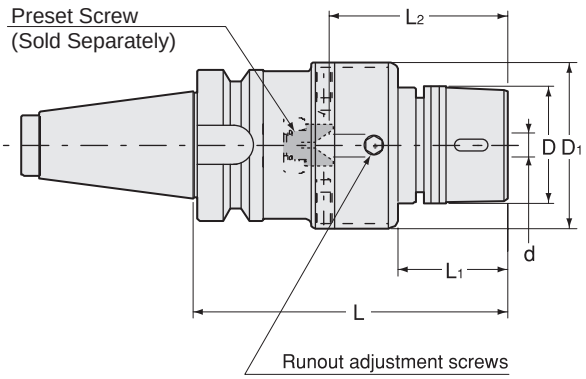

Unit : Metric

Code	Model	Type	d	L	L1	L2	D	D1	Nut	kg	Collet	Spanner	Hex. Wrench
3120 00107060	BT30 -GDZ07 -60	1	0.5 ~ 7.0	60	22	22 ~ 45	23	41	HDP-07A	0.6	FDC-07AA	S-0	L-3T
3120 00107075	-75	1	0.5 ~ 7.0	75	37	22 ~ 45	23	41	HDP-07A	0.6			
3120 00107090	-90	1	0.5 ~ 7.0	90	52	22 ~ 45	23	41	HDP-07A				
3120 00107105	-105	1	0.5 ~ 7.0	105	67	22 ~ 45	23	41	HDP-07A	0.7			
3120 00109075	BT30 -GDZ09 -75	1	2.5 ~ 9.0	75	28	27 ~ 57	29	41	GDP-09	0.7	FDC-09AA	FK-0025	L-3T
3120 00109090	-90	1	2.5 ~ 9.0	90	43	27 ~ 57	29	41	GDP-09				
3120 00109105	-105	1	2.5 ~ 9.0	105	58	27 ~ 57	29	41	GDP-09				
3120 00112105	BT30 -GDZ12 -105	2	2.5 ~ 12.0	105	42	33 ~ 69	34	52	GDP-12	1.1	FDC-12AA	FK-0034	L-4T
3120 00112120	-120	2	2.5 ~ 12.0	120	57	33 ~ 69	34	52	GDP-12				
3120 00112135	-135	2	2.5 ~ 12.0	135	72	33 ~ 69	34	52	GDP-12				
3120 00116105	BT30 -GDZ16 -105	2	3.5 ~ 16.0	105	42	38 ~ 82	38	56	GDP-16	1.2	FDC-16AA	FK-0034	L-4T
3120 00116120	-120	2	3.5 ~ 16.0	120	57	38 ~ 82	38	56	GDP-16				
3120 00116135	-135	2	3.5 ~ 16.0	135	72	38 ~ 82	38	56	GDP-16				
3120 00307090	BT40 -GDZ07 -90	1	0.5 ~ 7.0	90	43	22 ~ 45	23	41	HDP-07A	1.3	FDC-07AA	S-0	L-3T
3120 00307105	-105	1	0.5 ~ 7.0	105	58	22 ~ 45	23	41	HDP-07A				
3120 00307120	-120	1	0.5 ~ 7.0	120	73	22 ~ 45	23	41	HDP-07A				
3120 00309090	BT40 -GDZ09 -90	1	2.5 ~ 9.0	90	43	27 ~ 57	29	45	GDP-09	1.3	FDC-09AA	FK-0025	L-3T
3120 00309105	-105	1	2.5 ~ 9.0	105	58	27 ~ 57	29	45	GDP-09	1.4			
3120 00309120	-120	1	2.5 ~ 9.0	120	73	27 ~ 57	29	45	GDP-09				
3120 00309135	-135	1	2.5 ~ 9.0	135	88	27 ~ 57	29	45	GDP-09				
3120 00309165	-165	1	2.5 ~ 9.0	165	118	27 ~ 57	29	45	GDP-09				
3120 00312090	BT40 -GDZ12 -90	1	2.5 ~ 12.0	90	39	33 ~ 69	34	56	GDP-12	1.5	FDC-12AA	FK-0034	L-4T
3120 00312105	-105	1	2.5 ~ 12.0	105	54	33 ~ 69	34	56	GDP-12	1.6			
3120 00312120	-120	1	2.5 ~ 12.0	120	69	33 ~ 69	34	56	GDP-12	1.7			
3120 00312135	-135	1	2.5 ~ 12.0	135	84	33 ~ 69	34	56	GDP-12				
3120 00312165	-165	1	2.5 ~ 12.0	165	114	33 ~ 69	34	56	GDP-12				
3120 00312195	-195	1	2.5 ~ 12.0	195	144	33 ~ 69	34	56	GDP-12				
3120 00316090	BT40 -GDZ16 -90	1	3.5 ~ 16.0	90	43	38 ~ 82	38	62	GDP-16	1.6	FDC-16AA	FK-0034	L-4T
3120 00316105	-105	1	3.5 ~ 16.0	105	58	38 ~ 82	38	62	GDP-16	1.7			
3120 00316120	-120	1	3.5 ~ 16.0	120	73	38 ~ 82	38	62	GDP-16				
3120 00316135	-135	1	3.5 ~ 16.0	135	88	38 ~ 82	38	62	GDP-16				
3120 00316165	-165	1	3.5 ~ 16.0	165	118	38 ~ 82	38	62	GDP-16				
3120 00316195	-195	1	3.5 ~ 16.0	195	148	38 ~ 82	38	62	GDP-16				
3120 00322120	BT40 -GDZ22 -120	2	3.5 ~ 22.0	120	40	47 ~ 103	49	69	GDP-22	2.4	FDC-22AA	FK-0045	L-5T
3120 00322135	-135	2	3.5 ~ 22.0	135	55	47 ~ 103	49	69	GDP-22	2.6			
3120 00322165	-165	2	3.5 ~ 22.0	165	85	47 ~ 103	49	69	GDP-22				
3120 00322195	-195	2	3.5 ~ 22.0	195	115	47 ~ 103	49	69	GDP-22				

Inch to Metric (mm) → Inch × 25.4
Metric (mm) to Inch → Metric ÷ 25.4 or Metric × 0.03937

Special / Custom Sizes on request

Metric Sizes

Unit : Metric

Code	Model	Type	d	L	L1	L2	D	D1	Nut	kg	Collet	Spanner	Hex. Wrench
3120 00507090	BT50 -GDZ07 -90	1	0.5 ~ 7.0	90	32	22 ~ 45	23	41	HDP-07A		FDC-07AA	S-0	L-3T
3120 00507105	-105	1	0.5 ~ 7.0	105	47	22 ~ 45	23	41	HDP-07A	3.8			
3120 00507120	-120	1	0.5 ~ 7.0	120	62	22 ~ 45	23	41	HDP-07A				
3120 00507135	-135	1	0.5 ~ 7.0	135	77	22 ~ 45	23	41	HDP-07A				
3120 00507165	-165	1	0.5 ~ 7.0	165	107	22 ~ 45	23	41	HDP-07A				
3120 00507195	-195	1	0.5 ~ 7.0	195	137	22 ~ 45	23	41	HDP-07A				
3120 00509090	BT50 -GDZ09 -90	1	2.5 ~ 9.0	90	32	27 ~ 57	29	45	GDP-09		FDC-09AA	FK-0025	L-3T
3120 00509105	-105	1	2.5 ~ 9.0	105	47	27 ~ 57	29	45	GDP-09				
3120 00509120	-120	1	2.5 ~ 9.0	120	62	27 ~ 57	29	45	GDP-09				
3120 00509135	-135	1	2.5 ~ 9.0	135	77	27 ~ 57	29	45	GDP-09				
3120 00509165	-165	1	2.5 ~ 9.0	165	107	27 ~ 57	29	45	GDP-09				
3120 00509195	-195	1	2.5 ~ 9.0	195	137	27 ~ 57	29	45	GDP-09				
3120 00509225	-225	1	2.5 ~ 9.0	225	167	27 ~ 57	29	45	GDP-09				
3120 00509255	-255	1	2.5 ~ 9.0	255	197	27 ~ 57	29	45	GDP-09				
3120 00512105	BT50 -GDZ12 -105	1	2.5 ~ 12.0	105	43	33 ~ 69	34	56	GDP-12		FDC-12AA	FK-0034	L-4T
3120 00512120	-120	1	2.5 ~ 12.0	120	58	33 ~ 69	34	56	GDP-12				
3120 00512135	-135	1	2.5 ~ 12.0	135	73	33 ~ 69	34	56	GDP-12				
3120 00512165	-165	1	2.5 ~ 12.0	165	103	33 ~ 69	34	56	GDP-12				
3120 00512195	-195	1	2.5 ~ 12.0	195	133	33 ~ 69	34	56	GDP-12				
3120 00512225	-225	1	2.5 ~ 12.0	225	163	33 ~ 69	34	56	GDP-12				
3120 00512255	-255	1	2.5 ~ 12.0	255	193	33 ~ 69	34	56	GDP-12				
3120 00516105	BT50 -GDZ16 -105	1	3.5 ~ 16.0	105	43	38 ~ 82	38	62	GDP-16		FDC-16AA	FK-0034	L-4T
3120 00516120	-120	1	3.5 ~ 16.0	120	58	38 ~ 82	38	62	GDP-16				
3120 00516135	-135	1	3.5 ~ 16.0	135	73	38 ~ 82	38	62	GDP-16	4.4			
3120 00516165	-165	1	3.5 ~ 16.0	165	103	38 ~ 82	38	62	GDP-16				
3120 00516195	-195	1	3.5 ~ 16.0	195	133	38 ~ 82	38	62	GDP-16				
3120 00516225	-225	1	3.5 ~ 16.0	225	163	38 ~ 82	38	62	GDP-16				
3120 00516255	-255	1	3.5 ~ 16.0	255	193	38 ~ 82	38	62	GDP-16				
3120 00522105	BT50 -GDZ22 -105	1	3.5 ~ 22.0	105	39	47 ~ 103	49	76	GDP-22	4.5	FDC-22AA	FK-0045	L-5T
3120 00522120	-120	1	3.5 ~ 22.0	120	54	47 ~ 103	49	76	GDP-22				
3120 00522135	-135	1	3.5 ~ 22.0	135	69	47 ~ 103	49	76	GDP-22				
3120 00522150	-150	1	3.5 ~ 22.0	150	84	47 ~ 103	49	76	GDP-22				
3120 00522165	-165	1	3.5 ~ 22.0	165	99	47 ~ 103	49	76	GDP-22	5.2			
3120 00522195	-195	1	3.5 ~ 22.0	195	129	47 ~ 103	49	76	GDP-22	5.6			
3120 00522225	-225	1	3.5 ~ 22.0	225	159	47 ~ 103	49	76	GDP-22				
3120 00522255	-255	1	3.5 ~ 22.0	255	189	47 ~ 103	49	76	GDP-22				

1. Collet, preset screw, spanner and hex. wrench are sold separately.
2. Always use AA class collet.
3. Refer to P. 092 for minimum tool insertion length in case of using our coolant collets (OH,C or MS).
4. L2 indicates dimension when using with a preset screw.
5. See P.499 for standard Tightening Torque.

Collet P. 086 - 089

Spanner P. 095

Preset screw P. 094

Hex. Wrench P. 095





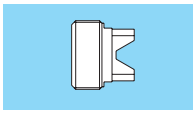



Ordering Example

BT40 - GDZ 09 - 90

- BT40: Shank size
- 09: Max. collet I.D.
- 90: Projection length (L)

Inch to Metric (mm) → Inch × 25.4
Metric (mm) to Inch → Metric ÷ 25.4 or Metric × 0.03937

Special / Custom Sizes on request

ERZ

"R"Zero Holder For Small Diameters

- Runout accuracy of the cutting edge can be adjusted as closely as to zero.
- For drilling in tight space.

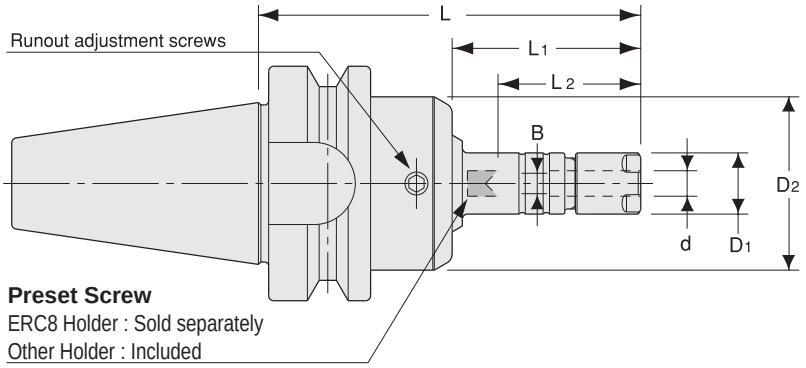

Unit : Metric

Code	Model	d	L	L1	B	L2	D1	D2	Nut	Collet	Spanner	Hex. Wrench
3130 00108060	**BT30 -ERZ8 -60**	0.5～5.0	60	22	— (0～3.1)	33 (19～29)	12	34	ERP-8	ER8 sold separately	S-8E	L-3T
3130 00108075	**-75**	0.5～5.0	75	37	— (0～3.1)	33 (19～29)	12	34	ERP-8			
3130 00108090	**-90**	0.5～5.0	90	52	— (0～3.1)	33 (19～29)	12	34	ERP-8			
3130 00108105	**-105**	0.5～5.0	105	67	— (0～3.1)	33 (19～29)	12	34	ERP-8			
3130 00110060	**BT30 -ERZ11S -60**	0.5～7.0	60	22	0～4	22～42	16	34	ERP-11S	ER11	S-11E	L-3T
3130 00110075	**-75**	0.5～7.0	75	37	0～4	22～42	16	34	ERP-11S			
3130 00110090	**-90**	0.5～7.0	90	52	0～4	22～42	16	34	ERP-11S			
3130 00110105	**-105**	0.5～7.0	105	67	0～4	22～42	16	34	ERP-11S			
3130 00308075	**BT40 -ERZ8 -75**	0.5～5.0	75	32	— (0～3.1)	33 (19～29)	12	34	ERP-8	ER8 sold separately	S-8E	L-3T
3130 00308090	**-90**	0.5～5.0	90	47	— (0～3.1)	33 (19～29)	12	34	ERP-8			
3130 00308105	**-105**	0.5～5.0	105	62	— (0～3.1)	33 (19～29)	12	34	ERP-8			
3130 00308135	**-135**	0.5～5.0	135	92	— (0～3.1)	33 (19～29)	12	34	ERP-8			
3130 00310075	**BT40 -ERZ11S -75**	0.5～7.0	75	32	0～4	22～42	16	34	ERP-11S	ER11	S-11E	L-3T
3130 00310090	**-90**	0.5～7.0	90	47	0～4	22～42	16	34	ERP-11S			
3130 00310105	**-105**	0.5～7.0	105	62	0～4	22～42	16	34	ERP-11S			
3130 00310135	**-135**	0.5～7.0	135	92	0～4	22～42	16	34	ERP-11S			

1. Collet ,spanner and hex. wrench are sold separately.
2. ES8, a preset screw for ERZ8, is sold separately. ERZ11S includes a standard preset screw HDS-07A-ES11.
3. " B " and " L2 " dimensions in brackets are for using ES8 preset screw.
4. Refer to P. 92 for minimum tool insertion length in case of using our coolant collets.
5. See P.499 for standard Tightening Torque.

Collet P. 090-091
Spanner P. 095
Preset screw P. 094
Hex. Wrench P. 095

Ordering Example

BT40 - **ERZ** **8** - **105**

BT40: Shank size; 8: Max. collet I.D.; 105: Projection length (L)

Inch to Metric (mm) → Inch × 25.4
Metric (mm) to Inch → Metric ÷ 25.4 or Metric × 0.03937

Special / Custom Sizes on request

PHZ·S New

Slim Hydro "R" Zero Holder

● Runout accuracy of the cutting edge can be adjusted as closely as to zero.

Type1

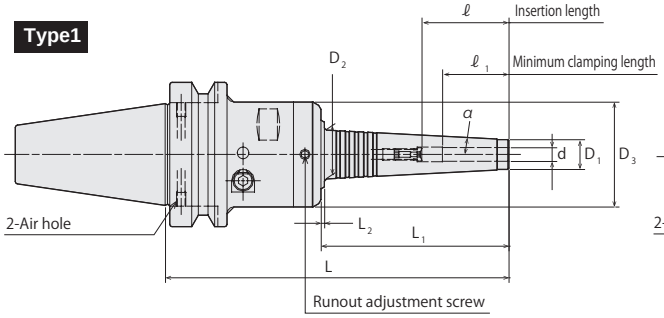

Type2

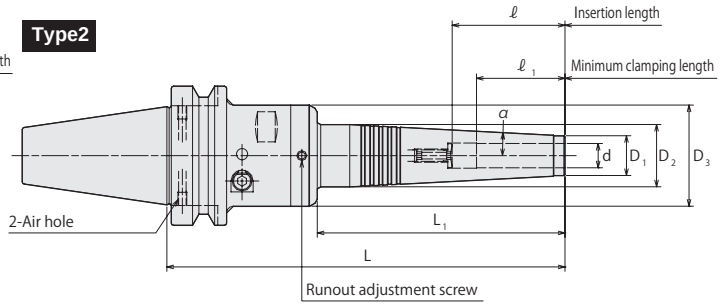

Metric Sizes

Unit : Metric

Code	Model	Type	d	L	L1	L2	D1	D2	D3	ℓ	ℓ 1	α	Hex. wrench for the actuating screw (Option)	Hex. wrench for runout adjustment screw (Option)
3600 00106150	BT30 -PHZ06S -150	1	6	150	82	1.5	13	21.5	46	37	29	3°	L-4T	L-3T
3600 00106180	-180	1	6	180	112	1.5	13	24.6	46	37	29	3°		
3600 00107150	-PHZ07S -150	1	7	150	82	1.5	14	22.5	46	37	29	3°		
3600 00107180	-180	1	7	180	112	1.5	14	25.6	46	37	29	3°		
3600 00108150	-PHZ08S -150	1	8	150	82	1.5	15	23.5	46	50	29	3°		
3600 00108180	-180	1	8	180	112	1.5	15	26.6	46	50	29	3°		
3600 00109150	-PHZ09S -150	1	9	150	82	1.5	16	24.5	46	50	40	3°		
3600 00109180	-180	1	9	180	112	—	16	27.6	46	50	40	3°		
3600 00110150	-PHZ10S -150	1	10	150	82	1.5	17	25.5	46	50	40	3°		
3600 00110180	-180	2	10	180	112	—	17	28.2	46	50	40	3°		
3600 00111150	-PHZ11S -150	1	11	150	82	1.5	18	26.5	46	50	40	3°		
3600 00111180	-180	2	11	180	112	—	18	28.2	46	50	40	3°		
3600 00112150	-PHZ12S -150	1	12	150	82	—	19	27.4	46	70	40	3°		
3600 00112180	-180	2	12	180	112	—	19	28.2	46	70	40	3°		
3600 00306150	BT40 -PHZ06S -150	1	6	150	82	1.5	13	21.5	46	37	29	3°	L-4T	L-3T
3600 00306180	-180	1	6	180	112	1.5	13	24.6	46	37	29	3°		
3600 00307150	-PHZ07S -150	1	7	150	82	1.5	14	22.5	46	37	29	3°		
3600 00307180	-180	1	7	180	112	1.5	14	25.6	46	37	29	3°		
3600 00308150	-PHZ08S -150	1	8	150	82	1.5	15	23.5	46	50	29	3°		
3600 00308180	-180	1	8	180	112	1.5	15	26.6	46	50	29	3°		
3600 00309150	-PHZ09S -150	1	9	150	82	1.5	16	24.5	46	50	40	3°		
3600 00309180	-180	1	9	180	112	—	16	27.6	46	50	40	3°		
3600 00310150	-PHZ10S -150	1	10	150	82	1.5	17	25.5	46	50	40	3°		
3600 00310180	-180	2	10	180	112	—	17	28.2	46	50	40	3°		
3600 00311150	-PHZ11S -150	1	11	150	82	1.5	18	26.5	46	50	40	3°		
3600 00311180	-180	2	11	180	112	—	18	28.2	46	50	40	3°		
3600 00312150	-PHZ12S -150	1	12	150	82	—	19	27.4	46	70	40	3°		
3600 00312180	-180	2	12	180	112	—	19	28.2	46	70	40	3°		
3600 00506165	BT50 -PHZ06S -165	1	6	165	82	1.5	13	21.5	46	37	29	3°	L-4T	L-3T
3600 00506195	-195	1	6	195	112	1.5	13	24.6	46	37	29	3°		
3600 00507165	-PHZ07S -165	1	7	165	82	1.5	14	22.5	46	37	29	3°		
3600 00507195	-195	1	7	195	112	1.5	14	25.6	46	37	29	3°		
3600 00508165	-PHZ08S -165	1	8	165	82	1.5	15	23.5	46	50	29	3°		
3600 00508195	-195	1	8	195	112	1.5	15	26.6	46	50	29	3°		
3600 00509165	-PHZ09S -165	1	9	165	82	1.5	16	24.5	46	50	40	3°		
3600 00509195	-195	1	9	195	112	—	16	27.6	46	50	40	3°		
3600 00510165	-PHZ10S -165	1	10	165	82	1.5	17	25.5	46	50	40	3°		
3600 00510195	-195	2	10	195	112	—	17	28.2	46	50	40	3°		
3600 00511165	-PHZ11S -165	1	11	165	82	1.5	18	26.5	46	50	40	3°		
3600 00511195	-195	2	11	195	112	—	18	28.2	46	50	40	3°		
3600 00512165	-PHZ12S -165	1	12	165	82	—	19	27.4	46	70	40	3°		
3600 00512195	-195	2	12	195	112	—	19	28.2	46	70	40	3°		

1. Tool shank diameter tolerance must be within h6.
2. Do not leave the holder with actuating screw tightened when the chuck is empty.
3. Hex-head screws (included) are necessary to plug air hole for center through coolant feed.

Tightening torque (Torque wrench : p.498)

model	I.D. (d)		Tightening torque (Nm)
	mm	inch	
PHZ·S	06 ~ 12	—	9 ~ 10

Hex. Wrench

P. 095



Ordering Example

BT40 - PHZ 8 S - 105

- BT40: Shank size
- 8: Max. collet I.D.
- 105: Projection length (L)

Inch to Metric (mm) → Inch × 25.4
Metric (mm) to Inch → Metric ÷ 25.4 or Metric × 0.03937

Special / Custom Sizes on request

PHC-A

Power Hydro Chuck

● Hydro chuck with collet holder flexibility. Suitable for high precision cutting.

Type1

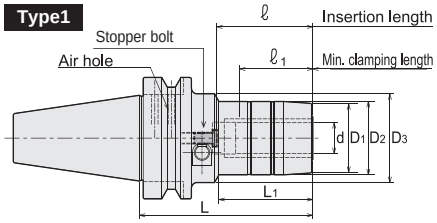

For PHC04A, the Stopper bolt is not included.
Please order separately (Special item).

Type2

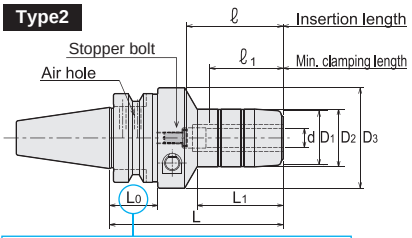

⚠ Caution
★ : Take precautions against A.T.C. interference.

Type3

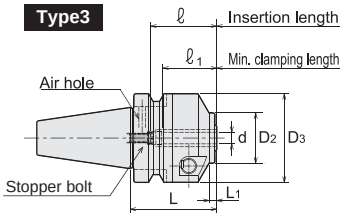

Type4

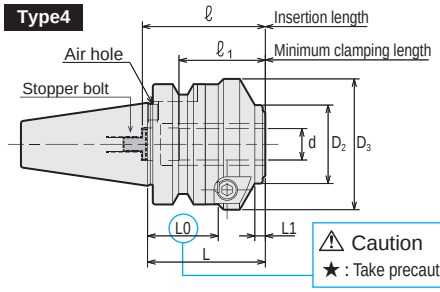

⚠ Caution
★ : Take precautions against A.T.C. interference.

Type5

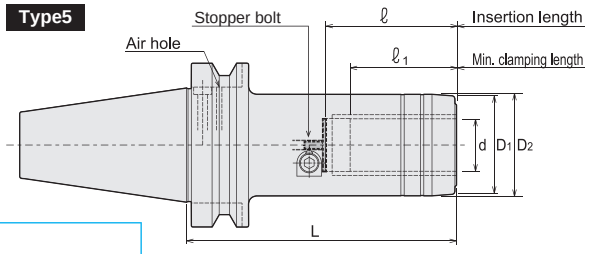

Metric Sizes

Unit : Metric

Code	Model	Type	d	L	L1	D1	D2	D3	L0	ℓ	ℓ1	Kg	Hex. Wrench (Option)
3930 01104065	BT30 -PHC04A -65	1	4	65	25.1	—	25	46	—	29	24		
3930 01106045	BT30 -PHC06A -45	3	6	45	4	—	26	46	—	34	29	0.6	
3930 01106075	-75	1	6	75	30	24	26	46	—	34	29	0.7	
3930 01107045	BT30 -PHC07A -45	3	7	45	4	—	28	46	—	34	29	0.6	
3930 01107075	-75	1	7	75	30	26	28	46	—	34	29	0.8	
3930 01108045	BT30 -PHC08A -45	3	8	45	4	—	28	46	—	34	29	0.6	
3930 01108075	-75	1	8	75	30	26	28	46	—	34	29	0.8	
3930 01109045	BT30 -PHC09A -45	3	9	45	4	—	30	46	—	45	33	0.6	
3930 01109090	-90	1	9	90	46	28	30	46	—	55	40	0.8	
3930 01109105	-105	2	9	105	44	28	30	52	40	50	40	1.2	
3930 01110045	BT30 -PHC10A -45	3	10	45	4	—	30	46	—	45	33	0.6	
3930 01110090	-90	1	10	90	46	28	30	46	—	55	40	0.8	
3930 01110105	-105	2	10	105	44	28	30	52	40	50	40	1.2	
3930 01111045	BT30 -PHC11A -45	3	11	45	4	—	30	46	—	45	33	0.6	
3930 01111090	-90	1	11	90	46	30	32	46	—	55	40	0.9	
3930 01111105	-105	2	11	105	45	30	32	52	40	50	40	1.1	
3930 01112045	BT30 -PHC12A -45	3	12	45	4	—	30	46	—	45	33	0.6	L-4T (4mm)
3930 01112090	-90	1	12	90	46	30	32	46	—	55	40	0.9	
3930 01112105	-105	2	12	105	45	30	32	52	40	50	40	1.1	
3930 01113045	BT30 -PHC13A -45	4	13	45	4	—	30	50	27	45	33	0.6	
3930 01113090	-90	1	13	90	48	34	36	46	—	55	40	0.9	
3930 01113105	-105	2	13	105	46	34	36	52	40	50	40	1.5	
3930 01114045	BT30 -PHC14A -45	4	14	45	4	—	30	50	27	45	33	0.6	
3930 01114090	-90	1	14	90	48	34	36	46	—	55	40	0.9	
3930 01114105	-105	2	14	105	46	34	36	52	40	50	40	1.2	
3930 01115045	BT30 -PHC15A -45	4	15	45	4	—	30	50	27	45	33	0.6	
3930 01115090	-90	1	15	90	48	36	38	46	—	55	40	1.0	
3930 01115105	-105	2	15	105	46	36	38	52	40	50	40	1.2	
3930 01116045	BT30 -PHC16A -45	4	16	45	4	—	30	50	27	45	33	0.6	
3930 01116090	-90	1	16	90	48	36	38	46	—	55	40	0.9	
3930 01116105	-105	2	16	105	46	36	38	52	40	50	40	1.2	
3930 01120090	BT30 -PHC20A -90	1	20	90	49	40	42	46	—	50	40	1.0	
3930 01120120	-120	1	20	120	69	40	42	46	—	70	40	1.3	
3930 01304070	BT40 -PHC04A -70	1	4	70	25.1	—	25	46	—	29	24		
3930 01306075	BT40 -PHC06A -75	1	6	75	30	24	26	46	—	34	29	1.3	
3930 01306105	-105	1	6	105	41	24	26	46	—	45	29	1.5	
3930 01307075	BT40 -PHC07A -75	1	7	75	30	26	28	46	—	34	29	1.3	
3930 01307105	-105	1	7	105	41	26	28	46	—	45	29	1.4	
3930 01308075	BT40 -PHC08A -75	1	8	75	30	26	28	46	—	34	29	1.3	
3930 01308105	-105	1	8	105	41	26	28	46	—	45	29	1.6	
3930 01309090	BT40 -PHC09A -90	1	9	90	44	28	30	52	—	50	40	1.4	
3930 01309120	-120	1	9	120	64	28	30	52	—	70	40	1.7	

L-4T (4mm)

Inch to Metric (mm) → Inch × 25.4
Metric (mm) to Inch → Metric ÷ 25.4 or Metric × 0.03937

Special / Custom Sizes on request

Metric Sizes

Unit : Metric

Code	Model	Type	d	L	L1	D1	D2	D3	L0	ℓ	ℓ1	Kg	Hex. Wrench (Option)
3930 01310090	BT40 -PHC10A -90	1	10	90	44	28	30	52	—	50	40	1.4	
3930 01310120	-120	1	10	120	64	28	30	52	—	70	40	1.7	
3930 01311090	BT40 -PHC11A -90	1	11	90	45	30	32	52	—	50	40	1.4	
3930 01311120	-120	1	11	120	65	30	32	52	—	70	40	1.7	
3930 01312090	BT40 -PHC12A -90	1	12	90	45	30	32	52	—	50	40	1.4	
3930 01312120	-120	1	12	120	65	30	32	52	—	70	40	1.7	
3930 01313090	BT40 -PHC13A -90	1	13	90	46	34	36	52	—	50	40	1.5	
3930 01313120	-120	1	13	120	66	34	36	52	—	70	40	1.8	
3930 01314090	BT40 -PHC14A -90	1	14	90	46	34	36	52	—	50	40	1.5	L-4T (4mm)
3930 01314120	-120	1	14	120	66	34	36	52	—	70	40	1.8	
3930 01315090	BT40 -PHC15A -90	1	15	90	46	36	38	52	—	50	40	1.5	
3930 01315120	-120	1	15	120	66	36	38	52	—	70	40	1.8	
3930 01316090	BT40 -PHC16A -90	1	16	90	46	36	38	52	—	50	40	1.5	
3930 01316120	-120	1	16	120	66	36	38	52	—	70	40	1.8	
3930 01320090	BT40 -PHC20A -90	1	20	90	49	40	42	46	—	50	40	1.5	
3930 01320120	-120	1	20	120	69	40	42	46	—	70	40	1.8	
3930 01325105	BT40 -PHC25A -105	1	25	105	59	50	52	62	—	60	50	2.1	
3930 01325135	-135	1	25	135	79	50	52	62	—	80	50	2.5	L-6T (6mm)
3930 01332120	BT40 -PHC32A -120	5	32	120	93	60	62	—	—	75	65	2.6	
3930 01332150	-150	5	32	150	123	60	62	—	—	80	65	3.2	
3930 01506090	BT50 -PHC06A -90	1	6	90	30	24	26	46	—	34	29	3.8	
3930 01506120	-120	1	6	120	41	24	26	46	—	45	29	4.1	
3930 01506150	-150	1	6	150	41	24	26	46	—	45	29	4.4	
3930 01507090	BT50 -PHC07A -90	1	7	90	30	26	28	46	—	34	29	3.9	
3930 01507120	-120	1	7	120	41	26	28	46	—	45	29	4.1	
3930 01507150	-150	1	7	150	41	26	28	46	—	45	29	4.5	
3930 01508090	BT50 -PHC08A -90	1	8	90	30	26	28	46	—	34	29	3.9	
3930 01508120	-120	1	8	120	41	26	28	46	—	45	29	4.1	
3930 01508150	-150	1	8	150	41	26	28	46	—	45	29	4.5	
3930 01509105	BT50 -PHC09A -105	1	9	105	44	28	30	52	—	50	40	4.0	
3930 01509135	-135	1	9	135	64	28	30	52	—	70	40	4.3	
3930 01509165	-165	1	9	165	64	28	30	52	—	70	40	4.7	
3930 01510105	BT50 -PHC10A -105	1	10	105	44	28	30	52	—	50	40	4.1	
3930 01510135	-135	1	10	135	64	28	30	52	—	70	40	4.3	
3930 01510165	-165	1	10	165	64	28	30	52	—	70	40	4.7	
3930 01511105	BT50 -PHC11A -105	1	11	105	45	30	32	52	—	50	40	4.1	
3930 01511135	-135	1	11	135	65	30	32	52	—	70	40	4.3	
3930 01511165	-165	1	11	165	65	30	32	52	—	70	40	4.7	
3930 01512105	BT50 -PHC12A -105	1	12	105	45	30	32	52	—	50	40	4.1	L-4T (4mm)
3930 01512135	-135	1	12	135	65	30	32	52	—	70	40	4.3	
3930 01512165	-165	1	12	165	65	30	32	52	—	70	40	4.7	
3930 01513105	BT50 -PHC13A -105	1	13	105	46	34	36	52	—	50	40	4.2	
3930 01513135	-135	1	13	135	66	34	36	52	—	70	40	4.4	
3930 01513165	-165	1	13	165	66	34	36	52	—	70	40	4.8	
3930 01514105	BT50 -PHC14A -105	1	14	105	46	34	36	52	—	50	40	4.1	
3930 01514135	-135	1	14	135	66	34	36	52	—	70	40	4.4	
3930 01514165	-165	1	14	165	66	34	36	52	—	70	40	4.8	
3930 01515105	BT50 -PHC15A -105	1	15	105	46	36	38	52	—	50	40	4.1	
3930 01515135	-135	1	15	135	66	36	38	52	—	70	40	4.4	
3930 01515165	-165	1	15	165	66	36	38	52	—	70	40	4.8	
3930 01516105	BT50 -PHC16A -105	1	16	105	46	36	38	52	—	50	40	4.1	
3930 01516135	-135	1	16	135	66	36	38	52	—	70	40	4.4	
3930 01516165	-165	1	16	165	66	36	38	52	—	70	40	4.8	
3930 01520105	BT50 -PHC20A -105	1	20	105	49	40	42	46	—	50	40	4.1	
3930 01520135	-135	1	20	135	69	40	42	46	—	70	40	4.4	
3930 01520165	-165	1	20	165	69	40	42	46	—	70	40	4.7	
3930 01525120	BT50 -PHC25A -120	1	25	120	59	50	52	62	—	64	50	4.7	
3930 01525150	-150	1	25	150	79	50	52	62	—	80	50	5.2	
3930 01525165	-165	1	25	165	79	50	52	62	—	80	50	5.5	L-6T (6mm)
3930 01532135	BT50 -PHC32A -135	5	32	135	—	60	62	—	—	75	65	5.2	
3930 01532165	-165	5	32	165	—	60	62	—	—	80	65	5.8	

1. Cutting tool shank must be within tolerances specified below ;
   Shank diameter less than 6mm : Within h6 tolerance
   Shank diameter 6mm and over : Within h7 tolerance
   h6 or 0/-0.01 tolerance is recommended when newly making a cutting tool.
2. Do not leave the holder with actuating screw tightened when the chuck is empty.
3. PHC12A and PHC20A have pin holes for collet with stopper pin on its body.
4. Hex-head screws (included) are necessary to plug air hole for center through coolant feed.
5. For PHC04A, the stopper bolt is not included. Please order separately (Special item).
6. For PHC04A, the length adjustment unit cannot be used.

Ordering Example

BT40 - PHC 12 A - 135

Shank size | I.D. (d) | Projection length (L)

Tightening torque (Torque wrench : p.498)

model	I.D. (d) mm	Tightening torque (Nm)
PHC·A	06 ~ 08	11 ~ 12
PHC·A	09 ~ 20	7 ~ 8
PHC·A	25, 32	29 ~ 30

PHS Collet P.110

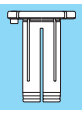

Hex. Wrench P. 095



Inch to Metric (mm) → Inch × 25.4
Metric (mm) to Inch → Metric ÷ 25.4 or Metric × 0.03937

Special / Custom Sizes on request

Length adjustment unit

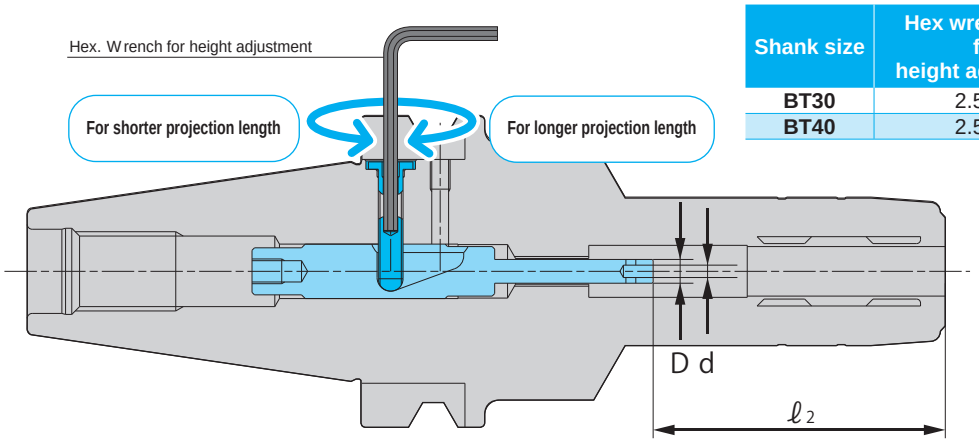

Shank size	Hex wrench size for height adjustment	Install / removal tool for length adjustment unit
BT30	2.5mm	STS-R1
BT40	2.5mm	STS-R2

Metric Sizes

Unit : Metric

Code	Length adjustment unit	Matched chuck	Adjustment range ℓ 2	Adjustable amount	Pin end I.D. (d)	Pin end O.D. (D)
3934 23044023	**PHC-P304-4023**	BT30 -PHC06A -75	29-34	5	2	3.8
3934 23044023	**PHC-P304-4023**	BT30 -PHC07A -75	29-34	5	2	3.8
3934 23044023	**PHC-P304-4023**	BT30 -PHC08A -75	29-34	5	2	3.8
3934 23053730	**PHC-P305-3730**	BT30 -PHC09A -90	40-45	5	2.5	4.8
3934 23053725	**PHC-P305-3725**	-90	45-50	5	2.5	4.8
3934 23053720	**PHC-P305-3720**	-90	50-55	5	2.5	4.8
3934 23054537	**PHC-P305-4537**	-105	40-45	5	2.5	4.8
3934 23054532	**PHC-P305-4532**	-105	45-50	5	2.5	4.8
3934 23053730	**PHC-P305-3730**	BT30 -PHC10A -90	40-45	5	2.5	4.8
3934 23053725	**PHC-P305-3725**	-90	45-50	5	2.5	4.8
3934 23053720	**PHC-P305-3720**	-90	50-55	5	2.5	4.8
3934 23054537	**PHC-P305-4537**	-105	40-45	5	2.5	4.8
3934 23054532	**PHC-P305-4532**	-105	45-50	5	2.5	4.8
3934 23053730	**PHC-P305-3730**	BT30 -PHC11A -90	40-45	5	2.5	4.8
3934 23053725	**PHC-P305-3725**	-90	45-50	5	2.5	4.8
3934 23053720	**PHC-P305-3720**	-90	50-55	5	2.5	4.8
3934 23054537	**PHC-P305-4537**	-105	40-45	5	2.5	4.8
3934 23054532	**PHC-P305-4532**	-105	45-50	5	2.5	4.8
3934 23053730	**PHC-P305-3730**	BT30 -PHC12A -90	40-45	5	2.5	4.8
3934 23053725	**PHC-P305-3725**	-90	45-50	5	2.5	4.8
3934 23053720	**PHC-P305-3720**	-90	50-55	5	2.5	4.8
3934 23054537	**PHC-P305-4537**	-105	40-45	5	2.5	4.8
3934 23054532	**PHC-P305-4532**	-105	45-50	5	2.5	4.8
3934 23053730	**PHC-P305-3730**	BT30 -PHC13A -90	40-45	5	2.5	4.8
3934 23053725	**PHC-P305-3725**	-90	45-50	5	2.5	4.8
3934 23053720	**PHC-P305-3720**	-90	50-55	5	2.5	4.8
3934 23054537	**PHC-P305-4537**	-105	40-45	5	2.5	4.8
3934 23054532	**PHC-P305-4532**	-105	45-50	5	2.5	4.8
3934 23053730	**PHC-P305-3730**	BT30 -PHC14A -90	40-45	5	2.5	4.8
3934 23053725	**PHC-P305-3725**	-90	45-50	5	2.5	4.8
3934 23053720	**PHC-P305-3720**	-90	50-55	5	2.5	4.8
3934 23054537	**PHC-P305-4537**	-105	40-45	5	2.5	4.8
3934 23054532	**PHC-P305-4532**	-105	45-50	5	2.5	4.8
3934 23053730	**PHC-P305-3730**	BT30 -PHC15A -90	40-45	5	2.5	4.8
3934 23053725	**PHC-P305-3725**	-90	45-50	5	2.5	4.8
3934 23053720	**PHC-P305-3720**	-90	50-55	5	2.5	4.8
3934 23054537	**PHC-P305-4537**	-105	40-45	5	2.5	4.8
3934 23054532	**PHC-P305-4532**	-105	45-50	5	2.5	4.8
3934 23053730	**PHC-P305-3730**	BT30 -PHC16A -90	40-45	5	2.5	4.8
3934 23053725	**PHC-P305-3725**	-90	45-50	5	2.5	4.8
3934 23053720	**PHC-P305-3720**	-90	50-55	5	2.5	4.8
3934 23054537	**PHC-P305-4537**	-105	40-45	5	2.5	4.8
3934 23054532	**PHC-P305-4532**	-105	45-50	5	2.5	4.8
3934 23054027	**PHC-P305-4027**	BT30 -PHC20A -90	40-45	5	2.5	4.8
3934 23054022	**PHC-P305-4022**	-90	45-50	5	2.5	4.8
3934 23054542	**PHC-P305-4542**	-120	50-55	5	2.5	4.8
3934 23054537	**PHC-P305-4537**	-120	55-60	5	2.5	4.8
3934 23054532	**PHC-P305-4532**	-120	60-65	5	2.5	4.8

Inch to Metric (mm) → Inch × 25.4
Metric (mm) to Inch → Metric ÷ 25.4 or Metric × 0.03937

Special / Custom Sizes on request

Metric Sizes

Unit : Metric

Code	Length adjustment unit	Matched chuck	Adjustment range ℓ 2	Adjustable amount	Pin end I.D. (d)	Pin end O.D. (D)
3934 24044423	**PHC-P404-4423**	BT40 -PHC06A -75	29-34	5	2	3.8
3934 24046334	**PHC-P404-6334**	-105	29-39	10	2	3.8
3934 24046328	**PHC-P404-6328**	-105	35-45	10	2	3.8
3934 24044423	**PHC-P404-4423**	BT40 -PHC07A -75	29-34	5	2	3.8
3934 24046334	**PHC-P404-6334**	-105	29-39	10	2	3.8
3934 24046328	**PHC-P404-6328**	-105	35-45	10	2	3.8
3934 24044423	**PHC-P404-4423**	BT40 -PHC08A -75	29-34	5	2	3.8
3934 24046334	**PHC-P404-6334**	-105	29-39	10	2	3.8
3934 24046328	**PHC-P404-6328**	-105	35-45	10	2	3.8
3934 24054427	**PHC-P405-4427**	BT40 -PHC09A -90	40-50	10	2.5	4.8
3934 24054952	**PHC-P405-4952**	-120	40-50	10	2.5	4.8
3934 24054942	**PHC-P405-4942**	-120	50-60	10	2.5	4.8
3934 24054932	**PHC-P405-4932**	-120	60-70	10	2.5	4.8
3934 24054427	**PHC-P405-4427**	BT40 -PHC10A -90	40-50	10	2.5	4.8
3934 24054952	**PHC-P405-4952**	-120	40-50	10	2.5	4.8
3934 24054942	**PHC-P405-4942**	-120	50-60	10	2.5	4.8
3934 24054932	**PHC-P405-4932**	-120	60-70	10	2.5	4.8
3934 24054427	**PHC-P405-4427**	BT40 -PHC11A -90	40-50	10	2.5	4.8
3934 24054952	**PHC-P405-4952**	-120	40-50	10	2.5	4.8
3934 24054942	**PHC-P405-4942**	-120	50-60	10	2.5	4.8
3934 24054932	**PHC-P405-4932**	-120	60-70	10	2.5	4.8
3934 24054427	**PHC-P405-4427**	BT40 -PHC12A -90	40-50	10	2.5	4.8
3934 24054952	**PHC-P405-4952**	-120	40-50	10	2.5	4.8
3934 24054942	**PHC-P405-4942**	-120	50-60	10	2.5	4.8
3934 24054932	**PHC-P405-4932**	-120	60-70	10	2.5	4.8
3934 24054427	**PHC-P405-4427**	BT40 -PHC13A -90	40-50	10	2.5	4.8
3934 24054952	**PHC-P405-4952**	-120	40-50	10	2.5	4.8
3934 24054942	**PHC-P405-4942**	-120	50-60	10	2.5	4.8
3934 24054932	**PHC-P405-4932**	-120	60-70	10	2.5	4.8
3934 24054427	**PHC-P405-4427**	BT40 -PHC14A -90	40-50	10	2.5	4.8
3934 24054952	**PHC-P405-4952**	-120	40-50	10	2.5	4.8
3934 24054942	**PHC-P405-4942**	-120	50-60	10	2.5	4.8
3934 24054932	**PHC-P405-4932**	-120	60-70	10	2.5	4.8
3934 24054427	**PHC-P405-4427**	BT40 -PHC15A -90	40-50	10	2.5	4.8
3934 24054952	**PHC-P405-4952**	-120	40-50	10	2.5	4.8
3934 24054942	**PHC-P405-4942**	-120	50-60	10	2.5	4.8
3934 24054932	**PHC-P405-4932**	-120	60-70	10	2.5	4.8
3934 24054427	**PHC-P405-4427**	BT40 -PHC16A -90	40-50	10	2.5	4.8
3934 24054952	**PHC-P405-4952**	-120	40-50	10	2.5	4.8
3934 24054942	**PHC-P405-4942**	-120	50-60	10	2.5	4.8
3934 24054932	**PHC-P405-4932**	-120	60-70	10	2.5	4.8
3934 24054427	**PHC-P405-4427**	BT40 -PHC20A -90	40-50	10	2.5	4.8
3934 24054952	**PHC-P405-4952**	-120	40-50	10	2.5	4.8
3934 24054942	**PHC-P405-4942**	-120	50-60	10	2.5	4.8
3934 24054932	**PHC-P405-4932**	-120	60-70	10	2.5	4.8
3934 24054432	**PHC-P405-4432**	BT40 -PHC25A -105	50-60	10	2.5	4.8
3934 24055452	**PHC-P405-5452**	-135	50-60	10	2.5	4.8
3934 24055442	**PHC-P405-5442**	-135	60-70	10	2.5	4.8
3934 24055432	**PHC-P405-5432**	-135	70-80	10	2.5	4.8
3934 24054432	**PHC-P405-4432**	BT40 -PHC32A -120	65-75	10	2.5	4.8
3934 24055452	**PHC-P405-5452**	-150	65-75	10	2.5	4.8
3934 24054952	**PHC-P405-4952**	-150	70-80	10	2.5	4.8

Length adjustment unit can be used for chucks other than 45mm projection length.
Length adjustment unit can be used with BT, CAT and SK shank chucks only.
For PHC04A, the length adjustment unit cannot be used.

Ordering Example

BT30-PHC10A-105 with adjustment range of 40-45mm (Adjustable amount-5mm).

Chuck — **BT30-PHC10A-105**

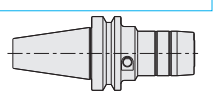

\+

Length adjustment unit — **PHC-P305-4537**

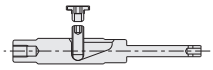

\+

Install / removal tool for length adjustment unit — **STS-R1**



Inch to Metric (mm) → Inch × 25.4
Metric (mm) to Inch → Metric ÷ 25.4 or Metric × 0.03937

Special / Custom Sizes on request

Length adjustment unit

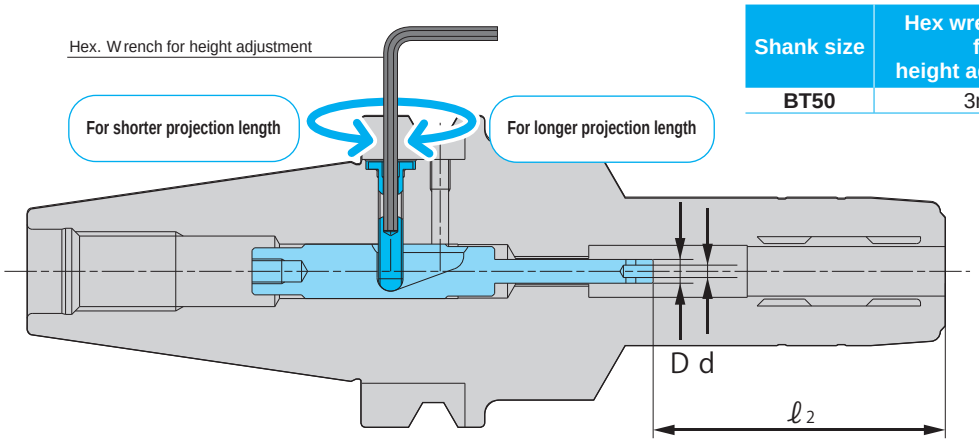

Shank size	Hex wrench size for height adjustment	Install / removal tool for length adjustment unit
BT50	3mm	STS-R2

Metric Sizes

Unit : Metric

Code	Length adjustment unit	Matched chuck	Adjustment range ℓ2	Adjustable amount	Pin end I.D. (d)	Pin end O.D. (D)
3934 25045129	**PHC-P504-5129**	BT50 -PHC06A-90	29-34	5	2	3.8
3934 25047139	**PHC-P504-7139**	-120	29-45	16	2	3.8
3934 25040139	**PHC-P504-10139**	-150	29-45	16	2	3.8
3934 25045129	**PHC-P504-5129**	BT50 -PHC07A-90	29-34	5	2	3.8
3934 25047139	**PHC-P504-7139**	-120	29-45	16	2	3.8
3934 25040139	**PHC-P504-10139**	-150	29-45	16	2	3.8
3934 25045129	**PHC-P504-5129**	BT50 -PHC08A-90	29-34	5	2	3.8
3934 25047139	**PHC-P504-7139**	-120	29-45	16	2	3.8
3934 25040139	**PHC-P504-10139**	-150	29-45	16	2	3.8
3934 25055133	**PHC-P505-5133**	BT50 -PHC09A-105	40-50	10	2.5	4.8
3934 25056153	**PHC-P505-6153**	-135	40-55	15	2.5	4.8
3934 25056138	**PHC-P505-6138**	-135	55-70	15	2.5	4.8
3934 25059153	**PHC-P505-9153**	-165	40-55	15	2.5	4.8
3934 25059138	**PHC-P505-9138**	-165	55-70	15	2.5	4.8
3934 25055133	**PHC-P505-5133**	BT50 -PHC10A-105	40-50	10	2.5	4.8
3934 25056153	**PHC-P505-6153**	-135	40-55	15	2.5	4.8
3934 25056138	**PHC-P505-6138**	-135	55-70	15	2.5	4.8
3934 25059153	**PHC-P505-9153**	-165	40-55	15	2.5	4.8
3934 25059138	**PHC-P505-9138**	-165	55-70	15	2.5	4.8
3934 25055133	**PHC-P505-5133**	BT50 -PHC11A-105	40-50	10	2.5	4.8
3934 25056153	**PHC-P505-6153**	-135	40-55	15	2.5	4.8
3934 25056138	**PHC-P505-6138**	-135	55-70	15	2.5	4.8
3934 25059153	**PHC-P505-9153**	-165	40-55	15	2.5	4.8
3934 25059138	**PHC-P505-9138**	-165	55-70	15	2.5	4.8
3934 25055133	**PHC-P505-5133**	BT50 -PHC12A-105	40-50	10	2.5	4.8
3934 25056153	**PHC-P505-6153**	-135	40-55	15	2.5	4.8
3934 25056138	**PHC-P505-6138**	-135	55-70	15	2.5	4.8
3934 25059153	**PHC-P505-9153**	-165	40-55	15	2.5	4.8
3934 25059138	**PHC-P505-9138**	-165	55-70	15	2.5	4.8
3934 25055133	**PHC-P505-5133**	BT50 -PHC13A-105	40-50	10	2.5	4.8
3934 25056153	**PHC-P505-6153**	-135	40-55	15	2.5	4.8
3934 25056138	**PHC-P505-6138**	-135	55-70	15	2.5	4.8
3934 25059153	**PHC-P505-9153**	-165	40-55	15	2.5	4.8
3934 25059138	**PHC-P505-9138**	-165	55-70	15	2.5	4.8
3934 25055133	**PHC-P505-5133**	BT50 -PHC14A-105	40-50	10	2.5	4.8
3934 25056153	**PHC-P505-6153**	-135	40-55	15	2.5	4.8
3934 25056138	**PHC-P505-6138**	-135	55-70	15	2.5	4.8
3934 25059153	**PHC-P505-9153**	-165	40-55	15	2.5	4.8
3934 25059138	**PHC-P505-9138**	-165	55-70	15	2.5	4.8
3934 25055133	**PHC-P505-5133**	BT50 -PHC15A-105	40-50	10	2.5	4.8
3934 25056153	**PHC-P505-6153**	-135	40-55	15	2.5	4.8
3934 25056138	**PHC-P505-6138**	-135	55-70	15	2.5	4.8
3934 25059153	**PHC-P505-9153**	-165	40-55	15	2.5	4.8
3934 25059138	**PHC-P505-9138**	-165	55-70	15	2.5	4.8
3934 25055133	**PHC-P505-5133**	BT50 -PHC16A-105	40-50	10	2.5	4.8
3934 25056153	**PHC-P505-6153**	-135	40-55	15	2.5	4.8
3934 25056138	**PHC-P505-6138**	-135	55-70	15	2.5	4.8
3934 25059153	**PHC-P505-9153**	-165	40-55	15	2.5	4.8
3934 25059138	**PHC-P505-9138**	-165	55-70	15	2.5	4.8

Inch to Metric (mm) → Inch × 25.4
Metric (mm) to Inch → Metric ÷ 25.4 or Metric × 0.03937

Special / Custom Sizes on request

Metric Sizes

Unit : Metric

Code	Length adjustment unit	Matched chuck	Adjustment range ℓ 2	Adjustable amount	Pin end I.D. (d)	Pin end O.D. (D)
3934 25055133	**PHC-P505-5133**	BT50 -PHC20A -105	40-50	10	2.5	4.8
3934 25056153	**PHC-P505-6153**	-135	40-55	15	2.5	4.8
3934 25056138	**PHC-P505-6138**	-135	55-70	15	2.5	4.8
3934 25059153	**PHC-P505-9153**	-165	40-55	15	2.5	4.8
3934 25059138	**PHC-P505-9138**	-165	55-70	15	2.5	4.8
3934 25055138	**PHC-P505-5138**	BT50 -PHC25A -120	50-64	14	2.5	4.8
3934 25056158	**PHC-P505-6158**	-150	50-65	15	2.5	4.8
3934 25056143	**PHC-P505-6143**	-150	65-80	15	2.5	4.8
3934 25057658	**PHC-P505-7658**	-165	50-65	15	2.5	4.8
3934 25057643	**PHC-P505-7643**	-165	65-80	15	2.5	4.8
3934 25055138	**PHC-P505-5138**	BT50 -PHC32A -135	65-75	10	2.5	4.8
3934 25056158	**PHC-P505-6158**	-165	65-80	15	2.5	4.8

Length adjustment unit can be used for chucks other than 45mm projection length.
Length adjustment unit can be used with BT, CAT and SK shank chucks only.
For PHC04A, the length adjustment unit cannot be used.

Ordering Example

BT50-PHC10A-105 with adjustment range of 40-45mm (Adjustable amount-5mm).

Chuck + Length adjustment unit + Install / removal tool for length adjustment unit

BT50-PHC10A-105

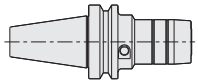

PHC-P505-5133

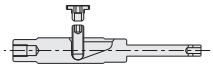

STS-R2

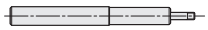

Collet with stopper pin

Minimum clumping length for PHS

Collet I.D. d Metric	Collet I.D. d Inch	Min. Clamping length Metric(Inch)
3, 4	1/8	25 (0.984)
5	3/16	30 (1.181)
6, 7	5/16	34 (1.339)
8, 9	7/16	38 (1.496)
10, 11	9/16, 1/4	42 (1.654)
12, 13, 14, 15, 16	3/8, 1/2, 5/8	50 (1.969)

d collet I.D. d1 Model number

d	1/8	3/16	1/4	5/16	3/8	7/16	1/2	9/16	5/8
d1	0125	0187	0250	0312	0375	0438	0500	0562	0625

For cutter with oil hole



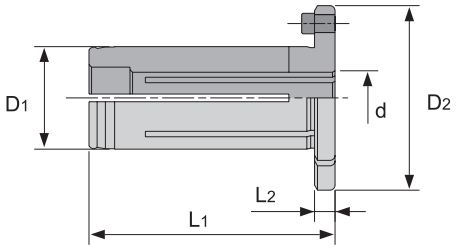

Ordering Example To hold ϕ6 cutting tool with BT40-PHC12A-120

Holder	Collet
BT40-PHC12A-120	PHS12-06-OH

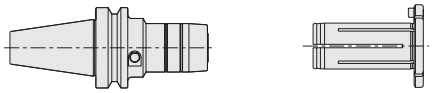

The collet with stopper pin can be used with PHC12A and PHC20A only.

The collet with stopper pin can be used with the length adjustment unit.

D1 Metric , d Metric — Unit : Metric

Model	D1	D2	L1	L2	d
PHS12- d -OH	12	26	48	4	3, 4, 5, 6, 7, 8, 9, 10
PHS20- d -OH	20	36	48	4	3, 4, 5, 6, 7, 8, 9, 10 11, 12, 13, 14, 15, 16

D1 Metric , d Inch — Unit : Inch

Model	D1	D2	L1	L2	d
PHS12- d1 -OH	0.472	1.024	1.890	0.158	1/8, 3/16, 1/4, 5/16, 3/8
PHS20- d1 -OH	0.787	1.418	1.890	0.158	1/8, 3/16, 1/4, 5/16, 3/8, 7/16, 1/2, 9/16, 5/8

D1 Inch , d Inch — Unit : Inch

Model	D1	D2	L1	L2	d
PHS0500- d1 -OH	0.500	1.024	1.890	1.158	1/8, 3/16, 1/4, 5/16, 3/8
PHS0750- d1 -OH	0.750	1.418	1.890	0.158	1/8, 3/16, 1/4, 5/16, 3/8, 7/16, 1/2, 9/16, 5/8

For collet through coolant



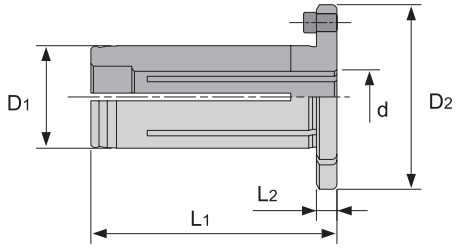

Ordering Example To hold ϕ6 cutting tool using collet through coolant feed with BT40-PHC12A-120

Holder	Collet
BT40-PHC12A-120	PHS12-06-C

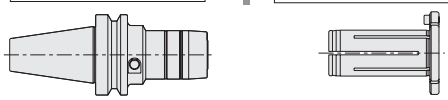

The collet with stopper pin can be used with PHC12A and PHC20A only.

The collet with stopper pin can be used with the length adjustment unit.

D1 Metric , d Metric — Unit : Metric

Model	D1	D2	L1	L2	d
PHS12- d -C	12	26	48	4	3, 4, 5, 6, 7, 8, 9
PHS20- d -C	20	36	48	4	3, 4, 5, 6, 7, 8, 9, 10 11, 12, 13, 14, 15, 16

D1 Metric , d Inch — Unit : Inch

Model	D1	D2	L1	L2	d
PHS12- d1 -C	0.472	1.024	1.890	0.158	1/8, 3/16, 1/4, 5/16, 3/8
PHS20- d1 -C	0.787	1.418	1.890	0.158	1/8, 3/16, 1/4, 5/16, 3/8, 7/16, 1/2, 9/16, 5/8

D1 Inch , d Inch — Unit : Inch

Model	D1	D2	L1	L2	d
PHS0500- d1 -C	0.500	1.024	1.890	1.158	1/8, 3/16, 1/4, 5/16, 3/8
PHS0750- d1 -C	0.750	1.418	1.890	0.158	1/8, 3/16, 1/4, 5/16, 3/8, 7/16, 1/2, 9/16, 5/8

Inch to Metric (mm) → Inch × 25.4
Metric (mm) to Inch → Metric ÷ 25.4 or Metric × 0.03937

Special / Custom Sizes on request

MEMO

PHC·S New

Slim Hydro Chuck

● Perfect choice for tight space applications, such as endmill finishing, drilling and reaming on 5-axis machines.

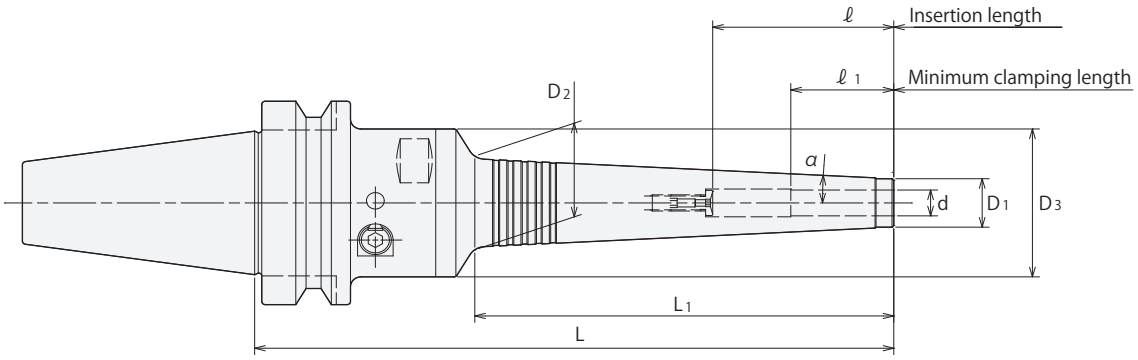

Metric Sizes

Unit : Metric

Code	Model	d	L	L1	D1	D2	D3	ℓ	ℓ 1	α	Kg	Hex. Wrench (Option)
3700 00106135	BT30 -PHC06S -135	6	135	71	13	20.5	46	37	29	3°	1.0	
3700 00106150	-150	6	150	87	13	22.2	46	37	29	3°	1.0	
3700 00106165	-165	6	165	102	13	23.7	46	37	29	3°	1.1	
3700 00106180	-180	6	180	118	13	25.4	46	37	29	3°	1.1	
3700 00107135	BT30 -PHC07S -135	7	135	71	14	21.5	46	37	29	3°	1.0	
3700 00107150	-150	7	150	87	14	23.2	46	37	29	3°	1.0	
3700 00107165	-165	7	165	102	14	24.7	46	37	29	3°	1.1	
3700 00107180	-180	7	180	118	14	26.4	46	37	29	3°	1.1	
3700 00108135	BT30 -PHC08S -135	8	135	72	15	22.6	46	50	29	3°	1.0	
3700 00108150	-150	8	150	87	15	24.2	46	50	29	3°	1.0	
3700 00108165	-165	8	165	103	15	25.8	46	50	29	3°	1.1	
3700 00108180	-180	8	180	118	15	27.4	46	50	29	3°	1.2	
3700 00109135	BT30 -PHC09S -135	9	135	72	16	23.6	46	50	40	3°	1.0	
3700 00109150	-150	9	150	87	16	25.2	46	50	40	3°	1.1	
3700 00109165	-165	9	165	103	16	26.8	46	50	40	3°	1.1	
3700 00109180	-180	9	180	118	16	28.4	46	50	40	3°	1.2	
3700 00110135	BT30 -PHC10S -135	10	135	72	17	24.6	46	50	40	3°	1.0	
3700 00110150	-150	10	150	88	17	26.3	46	50	40	3°	1.1	
3700 00110165	-165	10	165	103	17	27.8	46	50	40	3°	1.1	
3700 00110180	-180	10	180	119	17	29.5	46	50	40	3°	1.2	
3700 00111135	BT30 -PHC11S -135	11	135	73	18	25.7	46	50	40	3°	1.0	
3700 00111150	-150	11	150	88	18	27.3	46	50	40	3°	1.1	
3700 00111165	-165	11	165	104	18	29.0	46	50	40	3°	1.2	
3700 00111180	-180	11	180	119	18	30.5	46	50	40	3°	1.2	
3700 00112135	BT30 -PHC12S -135	12	135	73	19	26.7	46	70	40	3°	1.0	
3700 00112150	-150	12	150	88	19	28.3	46	70	40	3°	1.1	
3700 00112165	-165	12	165	104	19	30.0	46	70	40	3°	1.2	
3700 00112180	-180	12	180	119	19	31.5	46	70	40	3°	1.2	
3700 00306135	BT40 -PHC06S -135	6	135	71	13	20.5	46	37	29	3°	1.5	
3700 00306150	-150	6	150	87	13	22.2	46	37	29	3°	1.5	
3700 00306165	-165	6	165	102	13	23.7	46	37	29	3°	1.6	
3700 00306180	-180	6	180	118	13	25.4	46	37	29	3°	1.6	
3700 00307135	BT40 -PHC07S -135	7	135	71	14	21.5	46	37	29	3°	1.5	
3700 00307150	-150	7	150	87	14	23.2	46	37	29	3°	1.5	
3700 00307165	-165	7	165	102	14	24.7	46	37	29	3°	1.6	
3700 00307180	-180	7	180	118	14	26.4	46	37	29	3°	1.6	
3700 00308135	BT40 -PHC08S -135	8	135	72	15	22.6	46	50	29	3°	1.5	
3700 00308150	-150	8	150	87	15	24.2	46	50	29	3°	1.5	
3700 00308165	-165	8	165	103	15	25.8	46	50	29	3°	1.6	
3700 00308180	-180	8	180	118	15	27.4	46	50	29	3°	1.7	
3700 00309135	BT40 -PHC09S -135	9	135	72	16	23.6	46	50	40	3°	1.5	
3700 00309150	-150	9	150	87	16	25.2	46	50	40	3°	1.6	
3700 00309165	-165	9	165	103	16	26.8	46	50	40	3°	1.6	
3700 00309180	-180	9	180	118	16	28.4	46	50	40	3°	1.7	

L-4T

L-4T

Inch to Metric (mm) → Inch × 25.4
Metric (mm) to Inch → Metric ÷ 25.4 or Metric × 0.03937

Special / Custom Sizes on request

Metric Sizes

Unit : Metric

Code	Model	d	L	L1	D1	D2	D3	ℓ	ℓ 1	α	Kg	Hex. Wrench (Option)
3700 00310135	BT40 -PHC10S -135	10	135	72	17	24.6	46	50	40	3°	1.5	
3700 00310150	-150	10	150	88	17	26.3	46	50	40	3°	1.6	
3700 00310165	-165	10	165	103	17	27.8	46	50	40	3°	1.6	
3700 00310180	-180	10	180	119	17	29.5	46	50	40	3°	1.7	
3700 00311135	BT40 -PHC11S -135	11	135	73	18	25.7	46	50	40	3°	1.5	
3700 00311150	-150	11	150	88	18	27.3	46	50	40	3°	1.6	
3700 00311165	-165	11	165	104	18	29.0	46	50	40	3°	1.7	
3700 00311180	-180	11	180	119	18	30.5	46	50	40	3°	1.7	
3700 00312135	BT40 -PHC12S -135	12	135	73	19	26.7	46	70	40	3°	1.5	L-4T
3700 00312150	-150	12	150	88	19	28.3	46	70	40	3°	1.6	
3700 00312165	-165	12	165	104	19	30.0	46	70	40	3°	1.7	
3700 00312180	-180	12	180	119	19	31.5	46	70	40	3°	1.8	
3700 00316135	BT40 -PHC16S -135	16	135	72	23	30.6	52.5	75	40	3°		
3700 00316165	-165	16	165	103	23	33.8	52.5	80	40	3°		
3700 00316180	-180	16	180	119	23	35.5	52.5	80	40	3°		
3700 00320135	BT40 -PHC20S -135	20	135	63	28	34.7	62	70	40	3°		
3700 00320165	-165	20	165	93	28	37.8	62	100	40	3°		
3700 00320180	-180	20	180	109	28	39.5	62	100	40	3°		
3700 00325135	BT40 -PHC25S -135	25	135	65	37	43.9	62	70	50	3°		L-6T
3700 00325165	-165	25	165	96	37	47.1	62	100	50	3°		
3700 00325180	-180	25	180	112	37	48.8	62	110	50	3°		
3700 00506150	BT50 -PHC06S -150	6	150	71	13	20.5	46	37	29	3°	4.1	
3700 00506165	-165	6	165	87	13	22.2	46	37	29	3°	4.1	
3700 00506180	-180	6	180	102	13	23.7	46	37	29	3°	4.2	
3700 00506195	-195	6	195	118	13	25.4	46	37	29	3°	4.2	
3700 00507150	BT50 -PHC07S -150	7	150	71	14	21.5	46	37	29	3°	4.1	
3700 00507165	-165	7	165	87	14	23.2	46	37	29	3°	4.1	
3700 00507180	-180	7	180	102	14	24.7	46	37	29	3°	4.2	
3700 00507195	-195	7	195	118	14	26.4	46	37	29	3°	4.2	
3700 00508150	BT50 -PHC08S -150	8	150	72	15	22.6	46	50	29	3°	4.1	
3700 00508165	-165	8	165	87	15	24.2	46	50	29	3°	4.1	
3700 00508180	-180	8	180	103	15	25.8	46	50	29	3°	4.2	
3700 00508195	-195	8	195	118	15	27.4	46	50	29	3°	4.2	
3700 00509150	BT50 -PHC09S -150	9	150	72	16	23.6	46	50	40	3°	4.1	
3700 00509165	-165	9	165	87	16	25.2	46	50	40	3°	4.1	
3700 00509180	-180	9	180	103	16	26.8	46	50	40	3°	4.2	
3700 00509195	-195	9	195	118	16	28.4	46	50	40	3°	4.3	L-4T
3700 00510150	BT50 -PHC10S -150	10	150	72	17	24.6	46	50	40	3°	4.1	
3700 00510165	-165	10	165	88	17	26.3	46	50	40	3°	4.2	
3700 00510180	-180	10	180	103	17	27.8	46	50	40	3°	4.2	
3700 00510195	-195	10	195	119	17	29.5	46	50	40	3°	4.3	
3700 00511150	BT50 -PHC11S -150	11	150	73	18	25.7	46	50	40	3°	4.1	
3700 00511165	-165	11	165	88	18	27.3	46	50	40	3°	4.2	
3700 00511180	-180	11	180	104	18	29.0	46	50	40	3°	4.2	
3700 00511195	-195	11	195	119	18	30.5	46	50	40	3°	4.3	
3700 00512150	BT50 -PHC12S -150	12	150	73	19	26.7	46	70	40	3°	4.1	
3700 00512165	-165	12	165	88	19	28.3	46	70	40	3°	4.2	
3700 00512180	-180	12	180	104	19	30.0	46	70	40	3°	4.3	
3700 00512195	-195	12	195	119	19	31.5	46	70	40	3°	4.3	
3700 00516150	BT50 -PHC16S -150	16	150	72	23	30.6	52.5	75	40	3°		
3700 00516180	-180	16	180	103	23	33.8	52.5	80	40	3°		
3700 00516195	-195	16	195	119	23	35.5	52.5	80	40	3°		
3700 00520150	BT50 -PHC20S -150	20	150	63	28	34.7	62	70	40	3°		
3700 00520180	-180	20	180	93	28	37.8	62	100	40	3°		
3700 00520195	-195	20	195	109	28	39.5	62	100	40	3°		
3700 00525150	BT50 -PHC25S -150	25	150	65	37	43.9	62	70	50	3°		L-6T
3700 00525180	-180	25	180	96	37	47.1	62	100	50	3°		
3700 00525195	-195	25	195	112	37	48.8	62	110	50	3°		

1. Tool shank diameter tolerance must be within h6.
2. Do not leave the holder with actuating screw tightened when the chuck is empty.
3. Hex-head screws (included) are necessary to plug air hole for center through coolant feed.

Tightening torque (Torque wrench : p.498)

model	I.D. (d) mm	Tightening torque (Nm)
PHC·S	06 ~ 12, 16	9 ~ 10
PHC·S	20 ~ 25	23 ~ 24

Hex. Wrench

P. 095



Ordering Example

BT50 - PHC 12 S - 150

- BT50: Shank size
- 12: I.D. (d)
- 150: Projection length (L)

Inch to Metric (mm) → Inch × 25.4
Metric (mm) to Inch → Metric ÷ 25.4 or Metric × 0.03937

Special / Custom Sizes on request

SRE

Shrink Fit (Small Diameter Type)

● Shrinkage method clamps a cutting tool firmly by heating and cooling the chuck. High precision and strong Clamping force. (Small diameter type)



Type1

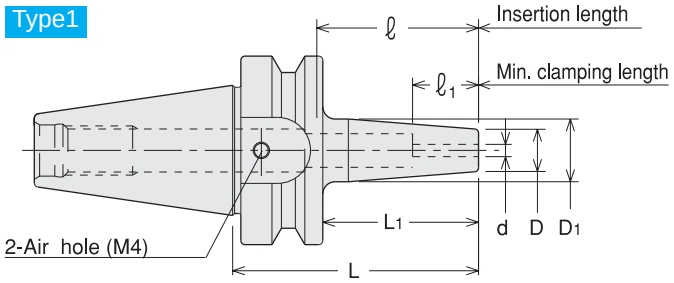

Type2

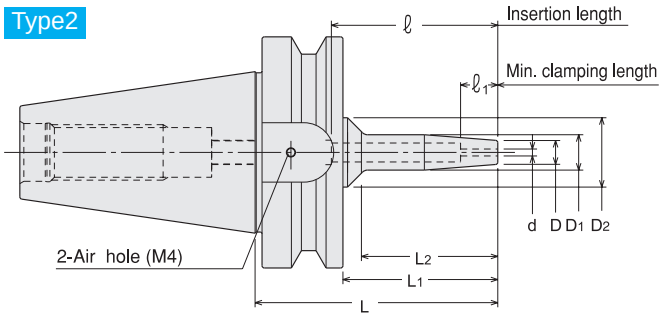

Metric Sizes

Unit : Metric

Code	Model	Type	d	L	L1	L2	D	D1	D2	ℓ1	ℓ
3060 51103045	BT30 -SRE3A -45	1	3	45	23	—	11.5	14.5	—	13	25
3060 51103060	-60	1	3	60	38	—	11.5	14.5	—	13	40
3060 51103085	-85	1	3	85	63	—	11.5	16.5	—	13	60
3060 51103105	-105	1	3	105	83	—	11.5	16.5	—	13	80
3060 51103120	-120	2	3	120	98	89	11.5	16.5	30	13	95
3060 51103145	-145	2	3	145	123	115	11.5	16.5	30	13	120
3060 51104045	BT30 -SRE4A -45	1	4	45	23	—	11.5	14.5	—	16	25
3060 51104060	-60	1	4	60	38	—	11.5	14.5	—	16	40
3060 51104085	-85	1	4	85	63	—	11.5	16.5	—	16	60
3060 51104105	-105	1	4	105	83	—	11.5	16.5	—	16	80
3060 51104120	-120	2	4	120	98	89	11.5	16.5	30	16	95
3060 51104145	-145	2	4	145	123	114	11.5	16.5	30	16	120
3060 51105045	BT30 -SRE5A -45	1	5	45	23	—	13	16	—	19	25
3060 51105060	-60	1	5	60	38	—	13	16	—	19	40
3060 51105085	-85	1	5	85	63	—	13	18	—	19	60
3060 51105105	-105	1	5	105	83	—	13	18	—	19	80
3060 51105120	-120	2	5	120	98	89	13	18	30	19	95
3060 51105145	-145	2	5	145	123	114	13	18	30	19	120
3060 51106045	BT30 -SRE6A -45	1	6	45	23	—	13	16	—	19	25
3060 51106060	-60	1	6	60	38	—	13	16	—	27	40
3060 51106085	-85	1	6	85	63	—	13	18	—	27	60
3060 51106105	-105	1	6	105	83	—	13	18	—	27	80
3060 51106120	-120	2	6	120	98	89	13	18	30	27	95
3060 51106145	-145	2	6	145	123	114	13	18	30	27	120
3060 51108045	BT30 -SRE8A -45	1	8	45	23	—	13	16	—	19	25
3060 51108060	-60	1	8	60	38	—	13	16	—	27	40
3060 51108085	-85	1	8	85	63	—	13	18	—	27	60
3060 51108105	-105	1	8	105	83	—	13	18	—	27	80
3060 51108120	-120	2	8	120	98	89	13	18	30	27	95
3060 51108145	-145	2	8	145	123	114	13	18	30	27	120
3060 51303050	BT40 -SRE3A -50	1	3	50	23	—	11.5	14.5	—	13	27
3060 51303070	-70	1	3	70	43	—	11.5	14.5	—	13	47
3060 51303100	-100	1	3	100	73	—	11.5	16.5	—	13	77
3060 51303120	-120	1	3	120	93	—	11.5	16.5	—	13	97
3060 51303135	-135	2	3	135	108	89	11.5	16.5	30	13	112
3060 51303160	-160	2	3	160	133	114	11.5	16.5	30	13	137

Inch to Metric (mm) → Inch × 25.4
Metric (mm) to Inch → Metric ÷ 25.4 or Metric × 0.03937

Special / Custom Sizes on request

Metric Sizes

Unit : Metric

Code	Model			Type	d	L	L1	L2	D	D1	D2	ℓ1	ℓ
3060 51304050	BT40	-SRE4A	-50	1	4	50	23	—	11.5	14.5	—	16	27
3060 51304070			-70	1	4	70	43	—	11.5	14.5	—	16	47
3060 51304100			-100	1	4	100	73	—	11.5	16.5	—	16	77
3060 51304120			-120	1	4	120	93	—	11.5	16.5	—	16	97
3060 51304135			-135	2	4	135	108	89	11.5	16.5	30	16	112
3060 51304160			-160	2	4	160	133	114	11.5	16.5	30	16	137
3060 51305050	BT40	-SRE5A	-50	1	5	50	23	—	13	16	—	19	27
3060 51305070			-70	1	5	70	43	—	13	16	—	19	47
3060 51305100			-100	1	5	100	73	—	13	18	—	19	77
3060 51305120			-120	1	5	120	93	—	13	18	—	19	97
3060 51305135			-135	2	5	135	108	89	13	18	30	19	112
3060 51305160			-160	2	5	160	133	114	13	18	30	19	137
3060 51306050	BT40	-SRE6A	-50	1	6	50	23	—	13	16	—	19	27
3060 51306070			-70	1	6	70	43	—	13	16	—	27	47
3060 51306100			-100	1	6	100	73	—	13	18	—	27	77
3060 51306120			-120	1	6	120	93	—	13	18	—	27	97
3060 51306135			-135	2	6	135	108	89	13	18	30	27	112
3060 51306160			-160	2	6	160	133	114	13	18	30	27	137
3060 51308050	BT40	-SRE8A	-50	1	8	50	23	—	13	16	—	19	27
3060 51308070			-70	1	8	70	43	—	13	16	—	27	47
3060 51308100			-100	1	8	100	73	—	13	18	—	27	77
3060 51308120			-120	1	8	120	93	—	13	18	—	27	97
3060 51308135			-135	2	8	135	108	89	13	18	30	27	112
3060 51308160			-160	2	8	160	133	114	13	18	30	27	137
3060 52503075	BT50	-SRE3A	-75	2	3	75	37	28	11.5	14.5	30	13	45
3060 52503090			-90	2	3	90	52	43	11.5	14.5	30	13	60
3060 52503120			-120	2	3	120	82	73	11.5	16.5	30	13	90
3060 52503135			-135	2	3	135	97	89	11.5	16.5	30	13	105
3060 52503160			-160	2	3	160	122	114	11.5	16.5	30	13	130
3060 52504075	BT50	-SRE4A	-75	2	4	75	37	28	11.5	14.5	30	16	45
3060 52504090			-90	2	4	90	52	43	11.5	14.5	30	16	60
3060 52504120			-120	2	4	120	82	73	11.5	16.5	30	16	90
3060 52504135			-135	2	4	135	97	89	11.5	16.5	30	16	105
3060 52504160			-160	2	4	160	122	114	11.5	16.5	30	16	130
3060 52505075	BT50	-SRE5A	-75	2	5	75	37	28	13	16	30	19	45
3060 52505090			-90	2	5	90	52	43	13	16	30	19	60
3060 52505120			-120	2	5	120	82	73	13	18	30	19	90
3060 52505135			-135	2	5	135	97	89	13	18	30	19	105
3060 52505160			-160	2	5	160	122	114	13	18	30	19	130
3060 52506075	BT50	-SRE6A	-75	2	6	75	37	28	13	16	30	19	45
3060 52506090			-90	2	6	90	52	43	13	16	30	19	60
3060 52506120			-120	2	6	120	82	73	13	18	30	27	90
3060 52506135			-135	2	6	135	97	89	13	18	30	27	105
3060 52506160			-160	2	6	160	122	114	13	18	30	27	130
3060 52508075	BT50	-SRE8A	-75	2	8	75	37	28	13	16	30	19	45
3060 52508090			-90	2	8	90	52	43	13	16	30	19	60
3060 52508120			-120	2	8	120	82	73	13	18	30	27	90
3060 52508135			-135	2	8	135	97	89	13	18	30	27	105
3060 52508160			-160	2	8	160	122	114	13	18	30	27	130

1.Always use carbide shank tools with h6 tolerance.
2.Use 2pcs. of M4 × 5 (S) hex. screw (included) to close air holes on the chuck when internal coolant is used.
3.Center through coolant is not possible with SRE3A and SRE4A.

Heating device chart

heating device	chuck	
	L1 ≦ 60mm	L1 > 60mm
ISG3400	Yes *	Yes
SRK-HA1, HB2	No	No

*Special induction coil is needed. Refer to P.500-501.

Ordering Example

BT40 - SRE 6 A - 125

Shank size | I.D. (d) | Projection length (L)

SRD

Shrink Fit (DIN Standard)

● Shrinkage method clamps a cutting tool firmly by heating and cooling the chuck. High precision, rigidity and strong Clamping force. (DIN Type)



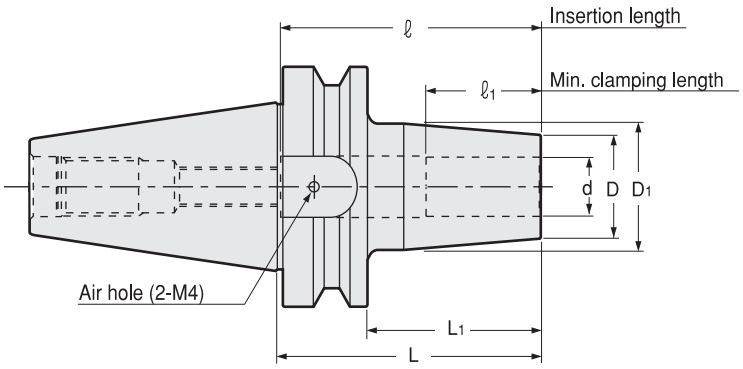

Inch Sizes

Unit : Inch

Code	Model	d	L	L1	D	D1	ℓ1	ℓ	kg
3060 43108080	BT30 -SRD0250 A -80	0.250	3.150	2.283	0.827	1.063	1.417	1.024	
3060 43108105	-105	0.250	4.134	3.268	0.827	1.063	1.417	1.024	
3060 43108120	-120	0.250	4.724	3.858	0.827	1.063	1.417	1.024	
3060 43110080	BT30 -SRD0312 A -80	0.312	3.150	2.283	0.827	1.063	1.969	1.024	0.6
3060 43110105	-105	0.312	4.134	3.268	0.827	1.063	1.969	1.024	
3060 43110120	-120	0.312	4.724	3.858	0.827	1.063	1.969	1.024	
3060 43112080	BT30 -SRD0375 A -80	0.375	3.150	2.283	0.945	1.260	1.969	1.260	
3060 43112105	-105	0.375	4.134	3.268	0.945	1.260	1.969	1.260	
3060 43112120	-120	0.375	4.724	3.858	0.945	1.260	1.969	1.260	
3060 43116080	BT30 -SRD0500 A -80	0.500	3.150	2.283	0.945	1.260	2.244	1.457	0.6
3060 43116105	-105	0.500	4.134	3.268	0.945	1.260	2.244	1.457	
3060 43116120	-120	0.500	4.724	3.858	0.945	1.260	2.244	1.457	
3060 43120080	BT30 -SRD0625 A -80	0.625	3.150	2.283	1.063	1.339	3.150	1.575	0.6
3060 43120105	-105	0.625	4.134	3.268	1.063	1.339	3.150	1.575	
3060 43120120	-120	0.625	4.724	3.858	1.063	1.339	3.150	1.575	
3060 43308090	BT40 SRD0250 A -90	0.250	3.543	2.480	0.827	1.063	1.417	1.024	1.2
3060 43308120	-120	0.250	4.724	3.661	0.827	1.063	1.417	1.024	
3060 43308160	-160	0.250	6.299	5.236	0.827	1.063	1.417	1.024	
3060 43310090	BT40 -SRD0312 A -90	0.312	3.543	2.480	0.827	1.063	1.969	1.024	
3060 43310120	-120	0.312	4.724	3.661	0.827	1.063	1.969	1.024	
3060 43310160	-160	0.312	6.299	5.236	0.827	1.063	1.969	1.024	
3060 43312090	BT40 -SRD0375 A -90	0.375	3.543	2.480	0.945	1.260	1.969	1.260	1.3
3060 43312120	-120	0.375	4.724	3.661	0.945	1.260	1.969	1.260	
3060 43312160	-160	0.375	6.299	5.236	0.945	1.260	1.969	1.260	
3060 43316090	BT40 -SRD0500 A -90	0.500	3.543	2.480	0.945	1.260	2.244	1.457	1.2
3060 43316120	-120	0.500	4.724	3.661	0.945	1.260	2.244	1.457	
3060 43316160	-160	0.500	6.299	5.236	0.945	1.260	2.244	1.457	
3060 43320090	BT40 -SRD0625 A -90	0.625	3.543	2.480	1.063	1.339	3.150	1.575	
3060 43320120	-120	0.625	4.724	3.661	1.063	1.339	3.150	1.575	
3060 43320160	-160	0.625	6.299	5.236	1.063	1.339	3.150	1.575	
3060 43324090	BT40 -SRD0750 A -90	0.750	3.543	2.480	1.299	1.654	3.386	1.575	
3060 43324120	-120	0.750	4.724	3.661	1.299	1.654	3.937	1.575	
3060 43324160	-160	0.750	6.299	5.236	1.299	1.654	3.937	1.575	
3060 43328090	BT40 -SRD0875 A -90	0.875	3.543	2.480	1.299	1.654	3.386	1.654	
3060 43328120	-120	0.875	4.724	3.661	1.299	1.654	3.937	1.654	
3060 43328160	-160	0.875	6.299	5.236	1.299	1.654	3.937	1.654	
3060 43332100	BT40 -SRD1000 A -100	1.000	3.937	2.874	1.732	2.087	3.780	1.890	
3060 43332120	-120	1.000	4.724	3.661	1.732	2.087	3.937	1.890	
3060 43332160	-160	1.000	6.299	5.236	1.732	2.087	3.937	1.890	

Inch to Metric (mm) → Inch × 25.4
Metric (mm) to Inch → Metric ÷ 25.4 or Metric × 0.03937

Special / Custom Sizes on request

Inch Sizes

Unit : Inch

Code	Model	d	L	L1	D	D1	ℓ1	ℓ	kg
3060 43340100	BT40 -SRD1250 A -100	1.250	3.937	2.874	1.732	2.087	3.780	1.890	
3060 43340120	-120	1.250	4.724	3.661	1.732	2.087	3.937	1.890	
3060 43340160	-160	1.250	6.299	5.236	1.732	2.087	3.937	1.890	
3060 43508100	BT50 -SRD0250 A -100	0.250	3.937	2.441	0.827	1.063	1.417	1.024	
3060 43508120	-120	0.250	4.724	3.228	0.827	1.063	1.417	1.024	
3060 43508160	-160	0.250	6.299	4.803	0.827	1.063	1.417	1.024	
3060 43510100	BT50 -SRD0312 A -100	0.312	3.937	2.441	0.827	1.063	1.969	1.024	
3060 43510120	-120	0.312	4.724	3.228	0.827	1.063	1.969	1.024	
3060 43510160	-160	0.312	6.299	4.803	0.827	1.063	1.969	1.024	
3060 43512100	BT50 -SRD0375 A -100	0.375	3.937	2.441	0.945	1.260	1.969	1.260	
3060 43512120	-120	0.375	4.724	3.228	0.945	1.260	1.969	1.260	
3060 43512160	-160	0.375	6.299	4.803	0.945	1.260	1.969	1.260	
3060 43516100	BT50 -SRD0500 A -100	0.500	3.937	2.441	0.945	1.260	2.244	1.457	
3060 43516120	-120	0.500	4.724	3.228	0.945	1.260	2.244	1.457	3.9
3060 43516160	-160	0.500	6.299	4.803	0.945	1.260	2.244	1.457	
3060 43520100	BT50 -SRD0625 A -100	0.625	3.937	2.441	1.063	1.339	3.150	1.575	
3060 43520120	-120	0.625	4.724	3.228	1.063	1.339	3.150	1.575	
3060 43520160	-160	0.625	6.299	4.803	1.063	1.339	3.150	1.575	
3060 43524100	BT50 -SRD0750 A -100	0.750	3.937	2.441	1.299	1.654	3.386	1.575	
3060 43524120	-120	0.750	4.724	3.228	1.299	1.654	3.937	1.575	
3060 43524160	-160	0.750	6.299	4.803	1.299	1.654	3.937	1.575	
3060 43528100	BT50 -SRD0875 A -100	0.875	3.937	2.441	1.299	1.654	3.386	1.654	
3060 43528120	-120	0.875	4.724	3.228	1.299	1.654	3.937	1.654	
3060 43528160	-160	0.875	6.299	4.803	1.299	1.654	3.937	1.654	
3060 43532110	BT50 -SRD1000 A -110	1.000	4.331	2.835	1.732	2.087	3.780	1.890	
3060 43532135	-135	1.000	5.315	3.819	1.732	2.087	3.937	1.890	
3060 43532160	-160	1.000	6.299	4.803	1.732	2.087	3.937	1.890	
3060 43540110	BT50 -SRD1250 A -110	1.250	4.331	2.835	1.732	2.087	3.937	1.890	
3060 43540135	-135	1.250	5.315	3.819	1.732	2.087	3.937	1.890	
3060 43540160	-160	1.250	6.299	4.803	1.732	2.087	3.937	1.890	
3060 43548110	BT50 -SRD1500 A -110	1.500	4.331	2.835	1.732	2.087	3.937	1.890	3.6
3060 43548135	-135	1.500	5.315	3.819	1.732	2.087	3.937	1.890	
3060 43548160	-160	1.500	6.299	4.803	1.732	2.087	3.937	1.890	

1.Always use carbide shank tools with h6 tolerance.
2.Use 2pcs. of M4 × 5 (S) hex. screw (included) to close air holes on the chuck when internal coolant is used.

Heating device chart

heating device	chuck	
	SRD0250A, SRD0312A	SRD0375A~SRD1500A
ISG3400	Yes	Yes
SRK-HA1, HB2	No	Yes

Ordering Example

BT40 - SRD 0250 A - 120

BT40: Shank size; 0250: I.D. (d); 120: Projection length (L)

Inch to Metric (mm) → Inch × 25.4
Metric (mm) to Inch → Metric ÷ 25.4 or Metric × 0.03937

Special / Custom Sizes on request

SRD

Shrink Fit (DIN Standard)

● Shrinkage method clamps a cutting tool firmly by heating and cooling the chuck. High precision, rigidity and strong Clamping force. (DIN Type)



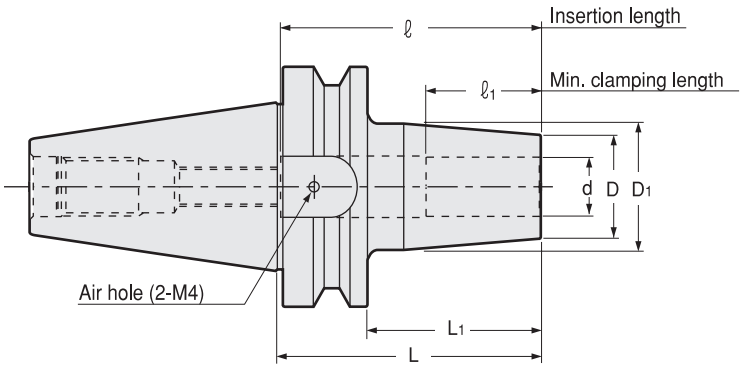

Metric Sizes

Unit : Metric

Code	Model	d	L	L1	D	D1	ℓ1	ℓ	kg
3060 41106080	BT30 -SRD6A -80	6	80	58	21	27	26	26 ~ 36	0.6
3060 41106105	-105	6	105	83	21	27	26	26 ~ 36	
3060 41106120	-120	6	120	98	21	27	26	26 ~ 36	
3060 41108080	BT30 -SRD8A -80	8	80	58	21	27	26	26 ~ 50	0.6
3060 41108105	-105	8	105	83	21	27	26	26 ~ 50	
3060 41108120	-120	8	120	98	21	27	26	26 ~ 50	
3060 41110080	BT30 -SRD10A -80	10	80	58	24	32	32	32 ~ 50	0.7
3060 41110105	-105	10	105	83	24	32	32	32 ~ 50	
3060 41110120	-120	10	120	98	24	32	32	32 ~ 50	
3060 41112080	BT30 -SRD12A -80	12	80	58	24	32	37	37 ~ 70	
3060 41112105	-105	12	105	83	24	32	37	37 ~ 70	
3060 41112120	-120	12	120	98	24	32	37	37 ~ 70	
3060 41114080	BT30 -SRD14A -80	14	80	58	27	34	37	37 ~ 70	
3060 41114105	-105	14	105	83	27	34	37	37 ~ 70	
3060 41114120	-120	14	120	98	27	34	37	37 ~ 70	
3060 41116080	BT30 -SRD16A -80	16	80	58	27	34	40	40 ~ 80	0.6
3060 41116105	-105	16	105	83	27	34	40	40 ~ 80	
3060 41116120	-120	16	120	98	27	34	40	40 ~ 80	
3060 41306090	BT40 -SRD6A -90	6	90	63	21	27	26	26 ~ 36	1.2
3060 41306120	-120	6	120	93	21	27	26	26 ~ 36	
3060 41306160	-160	6	160	133	21	27	26	26 ~ 36	
3060 41308090	BT40 -SRD8A -90	8	90	63	21	27	26	26 ~ 50	1.2
3060 41308120	-120	8	120	93	21	27	26	26 ~ 50	
3060 41308160	-160	8	160	133	21	27	26	26 ~ 50	
3060 41310090	BT40 -SRD10A -90	10	90	63	24	32	32	32 ~ 50	1.3
3060 41310120	-120	10	120	93	24	32	32	32 ~ 50	
3060 41310160	-160	10	160	133	24	32	32	32 ~ 50	
3060 41312090	BT40 -SRD12A -90	12	90	63	24	32	37	37 ~ 70	
3060 41312120	-120	12	120	93	24	32	37	37 ~ 70	
3060 41312160	-160	12	160	133	24	32	37	37 ~ 70	
3060 41314090	BT40 -SRD14A -90	14	90	63	27	34	37	37 ~ 70	
3060 41314120	-120	14	120	93	27	34	37	37 ~ 70	
3060 41314160	-160	14	160	133	27	34	37	37 ~ 70	
3060 41316090	BT40 -SRD16A -90	16	90	63	27	34	40	40 ~ 80	
3060 41316120	-120	16	120	93	27	34	40	40 ~ 80	
3060 41316160	-160	16	160	133	27	34	40	40 ~ 80	
3060 41318090	BT40 -SRD18A -90	18	90	63	33	42	40	40 ~ 80	1.4
3060 41318120	-120	18	120	93	33	42	40	40 ~ 80	
3060 41318160	-160	18	160	133	33	42	40	40 ~ 80	

Inch to Metric (mm) → Inch × 25.4
Metric (mm) to Inch → Metric ÷ 25.4 or Metric × 0.03937

Special / Custom Sizes on request

Metric Sizes

Unit : Metric

Code	Model	d	L	L1	D	D1	ℓ1	ℓ	kg
3060 41320090	BT40 -SRD20A -90	20	90	63	33	42	42	42 ~ 86	1.3
3060 41320120	-120	20	120	93	33	42	42	42 ~ 100	
3060 41320160	-160	20	160	133	33	42	42	42 ~ 100	
3060 41325100	BT40 -SRD25A -100	25	100	73	44	53	48	48 ~ 96	
3060 41325120	-120	25	120	93	44	53	48	48 ~ 100	2.0
3060 41325160	-160	25	160	133	44	53	48	48 ~ 100	
3060 41332100	BT40 -SRD32A -100	32	100	73	44	53	52	52 ~ 96	1.5
3060 41332120	-120	32	120	93	44	53	52	52 ~ 100	1.8
3060 41332160	-160	32	160	133	44	53	52	52 ~ 100	
3060 41506100	BT50 -SRD6A -100	6	100	62	21	27	26	26 ~ 36	
3060 41506120	-120	6	120	82	21	27	26	26 ~ 36	
3060 41506160	-160	6	160	122	21	27	26	26 ~ 36	
3060 41508100	BT50 -SRD8A -100	8	100	62	21	27	26	26 ~ 50	
3060 41508120	-120	8	120	82	21	27	26	26 ~ 50	
3060 41508160	-160	8	160	122	21	27	26	26 ~ 50	
3060 41510100	BT50 -SRD10A -100	10	100	62	24	32	32	32 ~ 50	3.8
3060 41510120	-120	10	120	82	24	32	32	32 ~ 50	
3060 41510160	-160	10	160	122	24	32	32	32 ~ 50	
3060 41512100	BT50 -SRD12A -100	12	100	62	24	32	37	37 ~ 70	3.8
3060 41512120	-120	12	120	82	24	32	37	37 ~ 70	
3060 41512160	-160	12	160	122	24	32	37	37 ~ 70	
3060 41514100	BT50 -SRD14A -100	14	100	62	27	34	37	37 ~ 70	
3060 41514120	-120	14	120	82	27	34	37	37 ~ 70	
3060 41514160	-160	14	160	122	27	34	37	37 ~ 70	
3060 41516100	BT50 -SRD16A -100	16	100	62	27	34	40	40 ~ 80	3.8
3060 41516120	-120	16	120	82	27	34	40	40 ~ 80	
3060 41516160	-160	16	160	122	27	34	40	40 ~ 80	
3060 41518100	BT50 -SRD18A -100	18	100	62	33	42	40	40 ~ 80	4.0
3060 41518120	-120	18	120	82	33	42	40	40 ~ 80	
3060 41518160	-160	18	160	122	33	42	40	40 ~ 80	
3060 41520100	BT50 -SRD20A -100	20	100	62	33	42	42	42 ~ 100	3.9
3060 41520120	-120	20	120	82	33	42	42	42 ~ 100	
3060 41520160	-160	20	160	122	33	42	42	42 ~ 100	
3060 41525110	BT50 -SRD25A -110	25	110	72	44	53	48	48 ~ 110	4.3
3060 41525135	-135	25	135	97	44	53	48	48 ~ 110	
3060 41525160	-160	25	160	122	44	53	48	48 ~ 110	
3060 41532110	BT50 -SRD32A -110	32	110	72	44	53	52	52 ~ 120	4.0
3060 41532135	-135	32	135	97	44	53	52	52 ~ 120	
3060 41532160	-160	32	160	122	44	53	52	52 ~ 120	

1.Always use carbide shank tools with h6 tolerance.
2.Use 2pcs. of M4 × 5 (S) hex. screw (included) to close air holes on the chuck when internal coolant is used.

Heating device chart

heating device	chuck	
	SRD6A, SRD8A	SRD10A~SRD32A
ISG3400	Yes	Yes
SRK-HA1, HB2	No	Yes

Ordering Example

BT40 - SRD 10 A - 120

- BT40: Shank size
- 10: I.D. (d)
- 120: Projection length (L)

Inch to Metric (mm) → Inch × 25.4
Metric (mm) to Inch → Metric ÷ 25.4 or Metric × 0.03937

Special / Custom Sizes on request

SRS

Shrink Fit (Slim Type)

● Shrinkage method clamps a cutting tool firmly by heating and cooling the chuck. High precision and strong Clamping force. (Slim Type)

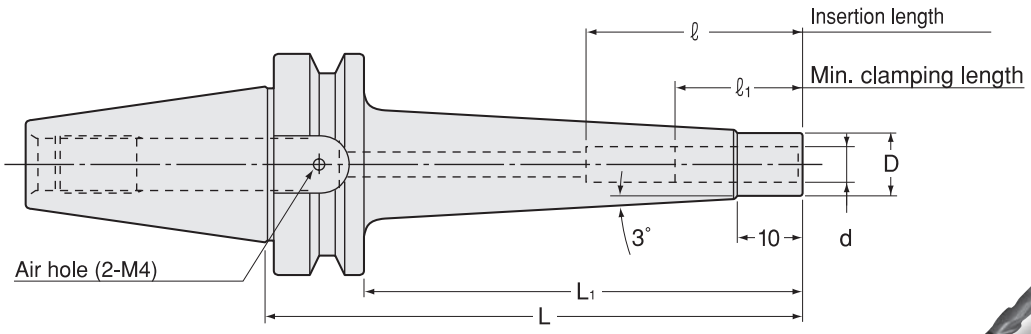



Inch Sizes

Unit : Inch

Code	Model	d	L	L1	D	l	l1
3060 33108105	BT30 -SRS0250A -105	0.250	4.134	3.268	0.374	1.024	1.417
3060 33108135	-135	0.250	5.315	4.449	0.374	1.024	1.417
3060 33110105	BT30 -SRS0312A -105	0.312	4.134	3.268	0.433	1.024	1.969
3060 33110135	-135	0.312	5.315	4.449	0.433	1.024	1.969
3060 33112105	BT30 -SRS0375A -105	0.375	4.134	3.268	0.512	1.260	1.969
3060 33112135	-135	0.375	5.315	4.449	0.512	1.260	1.969
3060 33116105	BT30 -SRS0500A -105	0.500	4.134	3.268	0.591	1.457	2.756
3060 33116135	-135	0.500	5.315	4.449	0.591	1.457	2.756
3060 33120105	BT30 -SRS0625A -105	0.625	4.134	3.268	0.787	1.575	3.150
3060 33120135	-135	0.625	5.315	4.449	0.787	1.575	3.150
3060 33308105	BT40 -SRS0250A -105	0.250	4.134	3.071	0.374	1.024	1.417
3060 33308135	-135	0.250	5.315	4.252	0.374	1.024	1.417
3060 33310105	BT40 -SRS0312A -105	0.312	4.134	3.071	0.433	1.024	1.969
3060 33310135	-135	0.312	5.315	4.252	0.433	1.024	1.969
3060 33312105	BT40 -SRS0375A -105	0.375	4.134	3.071	0.512	1.260	1.969
3060 33312135	-135	0.375	5.315	4.252	0.512	1.260	1.969
3060 33312165	-165	0.375	6.496	5.433	0.512	1.260	1.969
3060 33316105	BT40 -SRS0500A -105	0.500	4.134	3.071	0.591	1.457	2.756
3060 33316135	-135	0.500	5.315	4.252	0.591	1.457	2.756
3060 33316165	-165	0.500	6.496	5.433	0.591	1.457	2.756
3060 33320105	BT40 -SRS0625A -105	0.625	4.134	3.071	0.787	1.575	3.150
3060 33320135	-135	0.625	5.315	4.252	0.787	1.575	3.150
3060 33320165	-165	0.625	6.496	5.433	0.787	1.575	3.150
3060 33324105	BT40 -SRS0750A -105	0.750	4.134	3.071	1.024	1.654	3.937
3060 33324135	-135	0.750	5.315	4.252	1.024	1.654	3.937
3060 33324165	-165	0.750	6.496	5.433	1.024	1.654	3.937
3060 33508105	BT50 -SRS0250A -105	0.250	4.134	2.638	0.374	1.024	1.417
3060 33508135	-135	0.250	5.315	3.819	0.374	1.024	1.417
3060 33510105	BT50 -SRS0312A -105	0.312	4.134	2.638	0.433	1.024	1.969
3060 33510135	-135	0.312	5.315	3.819	0.433	1.024	1.969
3060 33512105	BT50 -SRS0375A -105	0.375	4.134	2.638	0.512	1.260	1.969
3060 33512135	-135	0.375	5.315	3.819	0.512	1.260	1.969
3060 33512165	-165	0.375	6.496	5.000	0.512	1.260	1.969
3060 33512195	-195	0.375	7.677	6.181	0.512	1.260	1.969
3060 33516105	BT50 -SRS0500A -105	0.500	4.134	2.638	0.591	1.457	2.756
3060 33516135	-135	0.500	5.315	3.819	0.591	1.457	2.756
3060 33516165	-165	0.500	6.496	5.000	0.591	1.457	2.756
3060 33516195	-195	0.500	7.677	6.181	0.591	1.457	2.756
3060 33520105	BT50 -SRS0625A -105	0.625	4.134	2.638	0.787	1.575	3.150
3060 33520135	-135	0.625	5.315	3.819	0.787	1.575	3.150
3060 33520165	-165	0.625	6.496	5.000	0.787	1.575	3.150
3060 33520195	-195	0.625	7.677	6.181	0.787	1.575	3.150
3060 33524105	BT50 -SRS0750A -105	0.750	4.134	2.638	1.024	1.654	3.937
3060 33524135	-135	0.750	5.315	3.819	1.024	1.654	3.937
3060 33524165	-165	0.750	6.496	5.000	1.024	1.654	3.937
3060 33524195	-195	0.750	7.677	6.181	1.024	1.654	3.937

Inch to Metric (mm) → Inch × 25.4
Metric (mm) to Inch → Metric ÷ 25.4 or Metric × 0.03937

Special / Custom Sizes on request

Metric Sizes

Unit : Metric

Code	Model			d	L	L1	D	ℓ1	ℓ	kg
3060 31206105	BT30	-SRS6A	-105	6	105	83	9	26	26 ~ 36	0.6
3060 31206135			-135	6	135	113	9	26	26 ~ 36	0.6
3060 31208105	BT30	-SRS8A	-105	8	105	83	11	26	26 ~ 50	0.7
3060 31208135			-135	8	135	113	11	26	26 ~ 50	0.7
3060 31110105	BT30	-SRS10A	-105	10	105	83	13	32	32 ~ 50	0.7
3060 31110135			-135	10	135	113	13	32	32 ~ 50	0.7
3060 31112105	BT30	-SRS12A	-105	12	105	83	15	37	37 ~ 70	0.7
3060 31112135			-135	12	135	113	15	37	37 ~ 70	0.8
3060 31116105	BT30	-SRS16A	-105	16	105	83	20	40	40 ~ 80	0.8
3060 31116135			-135	16	135	113	20	40	40 ~ 80	0.8
3060 31306105	BT40	-SRS6A	-105	6	105	78	9	26	26 ~ 36	1.1
3060 31306135			-135	6	135	108	9	26	26 ~ 36	1.1
3060 31306165			-165	6	165	138	9	26	26 ~ 36	
3060 31308105	BT40	-SRS8A	-105	8	105	78	11	26	26 ~ 50	1.2
3060 31308135			-135	8	135	108	11	26	26 ~ 50	1.2
3060 31308165			-165	8	165	138	11	26	26 ~ 50	
3060 31310105	BT40	-SRS10A	-105	10	105	78	13	32	32 ~ 50	1.3
3060 31310135			-135	10	135	108	13	32	32 ~ 50	1.4
3060 31310165			-165	10	165	138	13	32	32 ~ 50	1.5
3060 31312105	BT40	-SRS12A	-105	12	105	78	15	37	37 ~ 70	1.3
3060 31312135			-135	12	135	108	15	37	37 ~ 70	1.4
3060 31312165			-165	12	165	138	15	37	37 ~ 70	1.5
3060 31316105	BT40	-SRS16A	-105	16	105	78	20	40	40 ~ 80	1.5
3060 31316135			-135	16	135	108	20	40	40 ~ 80	1.6
3060 31316165			-165	16	165	138	20	40	40 ~ 80	1.7
3060 31320105	BT40	-SRS20A	-105	20	105	78	26	42	42 ~ 100	1.6
3060 31320135			-135	20	135	108	26	42	42 ~ 100	1.7
3060 31320165			-165	20	165	138	26	42	42 ~ 100	1.8
3060 31506105	BT50	-SRS6A	-105	6	105	67	9	26	26 ~ 36	3.5
3060 31506135			-135	6	135	97	9	26	26 ~ 36	3.5
3060 31506165			-165	6	165	127	9	26	26 ~ 36	
3060 31508105	BT50	-SRS8A	-105	8	105	67	11	26	26 ~ 50	3.6
3060 31508135			-135	8	135	97	11	26	26 ~ 50	3.6
3060 31508165			-165	8	165	127	11	26	26 ~ 50	
3060 31510105	BT50	-SRS10A	-105	10	105	67	13	32	32 ~ 50	3.8
3060 31510135			-135	10	135	97	13	32	32 ~ 50	3.8
3060 31510165			-165	10	165	127	13	32	32 ~ 50	4.0
3060 31510195			-195	10	195	157	13	32	32 ~ 50	4.1
3060 31512105	BT50	-SRS12A	-105	12	105	67	15	37	37 ~ 70	3.8
3060 31512135			-135	12	135	97	15	37	37 ~ 70	3.9
3060 31512165			-165	12	165	127	15	37	37 ~ 70	4.0
3060 31512195			-195	12	195	157	15	37	37 ~ 70	4.1
3060 31516105	BT50	-SRS16A	-105	16	105	67	20	40	40 ~ 80	3.9
3060 31516135			-135	16	135	97	20	40	40 ~ 80	3.9
3060 31516165			-165	16	165	127	20	40	40 ~ 80	4.2
3060 31516195			-195	16	195	157	20	40	40 ~ 80	4.2
3060 31520105	BT50	-SRS20A	-105	20	105	67	26	42	42 ~ 100	4.0
3060 31520135			-135	20	135	97	26	42	42 ~ 100	4.0
3060 31520165			-165	20	165	127	26	42	42 ~ 100	4.3
3060 31520195			-195	20	195	157	26	42	42 ~ 100	4.5

1.Always use carbide shank tools with h6 tolerance.

2.Use 2pcs. of M4 × 5 (S) hex. screw (included) to close air holes on the chuck when internal coolant is used.

Heating device chart

heating device	chuck	
	SRS0250A, SRS0312A SRS6A, SRS8A	SRS0375A~SRS0750A SRS10A~SRS20A
ISG3400	Yes	Yes
SRK-HA1, HB2	No	Yes

Ordering Example

BT40 - SRS 12 A - 105

Shank size | I.D. (d) | Projection length (L)

Inch to Metric (mm) → Inch × 25.4
Metric (mm) to Inch → Metric ÷ 25.4 or Metric × 0.03937

Special / Custom Sizes on request

SRK

Shrink Fit (Heavy Type)

● Shrinkage method clamps a cutting tool firmly by heating and cooling the chuck. High precision, rigidity and strong clamping force. (Heavy Type)

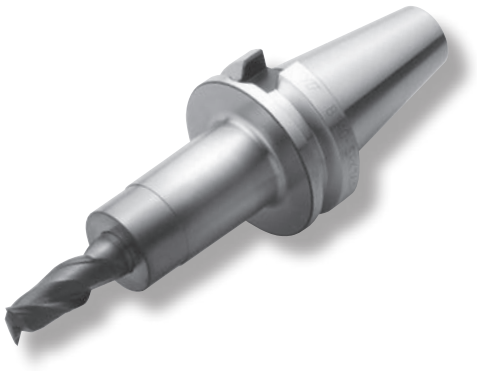

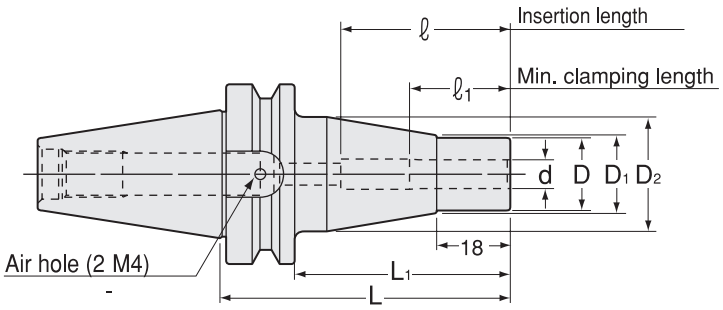

Metric Sizes

Unit : Metric

Code	Model	d	L	L1	D	D1	D2	ℓ1	ℓ	kg
3060 01206075	BT30 -SRK6A -75	6	75	53	16	17	30	26	26 ~ 36	0.8
3060 01208075	BT30 -SRK8A -75	8	75	53	19	20	32	26	26 ~ 50	0.8
3060 01110075	BT30 -SRK10A -75	10	75	53	24	25	34	32	32 ~ 50	0.9
3060 01112075	BT30 -SRK12A -75	12	75	53	28	29	34	37	37 ~ 70	0.9
3060 01116075	BT30 -SRK16A -75	16	75	53	32	33	34	40	40 ~ 80	0.9
3060 01306090	BT40 -SRK6A -90	6	90	63	16	17	30	26	26 ~ 36	1.4
3060 01308090	BT40 -SRK8A -90	8	90	63	19	20	32	26	26 ~ 50	1.4
3060 01310090	BT40 -SRK10A -90	10	90	63	24	25	34	32	32 ~ 50	1.5
3060 01312090	BT40 -SRK12A -90	12	90	63	28	29	34	37	37 ~ 70	1.5
3060 01316090	BT40 -SRK16A -90	16	90	63	32	33	34	40	40 ~ 80	1.5
3060 01320090	BT40 -SRK20A -90	20	90	63	36	37	46	42	42 ~ 100	1.7
3060 01325105	BT40 -SRK25A -105	25	105	78	46	47	50	48	48 ~ 110	2.0
3060 01506105	BT50 -SRK6A -105	6	105	67	16	17	30	26	26 ~ 36	3.7
3060 01508105	BT50 -SRK8A -105	8	105	67	19	20	32	26	26 ~ 50	3.7
3060 01510105	BT50 -SRK10A -105	10	105	67	24	25	34	32	32 ~ 50	3.9
3060 01512105	BT50 -SRK12A -105	12	105	67	28	29	34	37	37 ~ 70	3.9
3060 01516105	BT50 -SRK16A -105	16	105	67	32	33	34	40	40 ~ 80	3.9
3060 01520105	BT50 -SRK20A -105	20	105	67	36	37	46	42	42 ~ 100	4.1
3060 01525120	BT50 -SRK25A -120	25	120	82	46	47	53	48	48 ~ 110	4.4
3060 01532120	BT50 -SRK32A -120	32	120	82	56	57	70	51	51 ~ 120	5.2

1.Always use carbide shank tools with h6 tolerance.
2.Use 2pcs. of M4 × 5 (S) hex. screw (included) to close air holes on the chuck when internal coolant is used.

Heating device chart

heating device	chuck	
	SRK6A, SRK8A	SRK10A~SRK32A
ISG3400	Yes	Yes *
SRK-HA1, HB2	No	Yes

*Special induction coil is needed. Refer to P.500-501.

Ordering Example

BT40 - SRK 10 A - 90

Shank size | I.D. (d) | Projection length (L)

Inch to Metric (mm) → Inch × 25.4
Metric (mm) to Inch → Metric ÷ 25.4 or Metric × 0.03937

Special / Custom Sizes on request

MEMO

STM

Synchronous Tap Holder With Easy Tool Length Adjustment

● Projection length of the cutting tool can be adjusted by simply turning circumference of the holder.



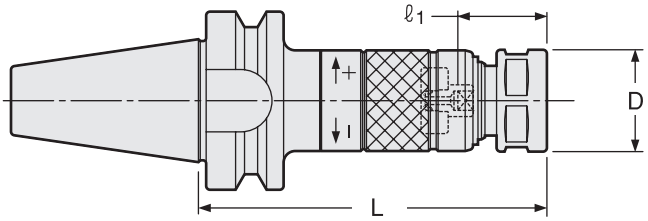

⚠ For capable tap sizes, please refer to P.462-464 chart.

（NOTE）Nut O.D. of STM8 is 19mm.

STM Holder + Collet + STS Driver

Unit : Metric

Code	Model	Tap Size	L	D	Nut	kg	Collet	Preset Driver	Spanner
3910 00100075	BT30 -STM8 -75 ✻	Old JIS Taps	75	21	KDP-1414		FDC-07	STS-8	Flat 17mm width
3910 00100090	-90	M4 ~ 8	90	21	KDP-1414				
3910 00100105	-105	U No8 ~ 5/16	105	21	KDP-1414				
3910 00100120	-120	OSG Synchro Taps	120	21	KDP-1414				
3910 00100135	-135	M4 ~ 6	135	21	KDP-1414				
3910 00100150	-150		150	21	KDP-1414				
3910 10100075	BT30 -STM12 -75 ✻	Old JIS Taps	75	26	HTP-09	0.6	FSC-09	STS-12	S-1L
3910 10100090	-90	M4 ~ 12	90	26	HTP-09	0.6			
3910 10100105	-105	U No8 ~ 7/16 PT1/8	105	26	HTP-09	0.7			
3910 10100120	-120	OSG Synchro Taps	120	26	HTP-09	0.7			
3910 10100135	-135	M4 ~ 10	135	26	HTP-09	0.8			
3910 10100150	-150		150	26	HTP-09	0.8			
3910 10100165	-165		165	26	HTP-09				
3910 30100090	BT30 -STM18 -90	Old JIS Taps	90	36	HTP-16	0.7	FSC-16	STS-18	S-4L
3910 30100105	-105	M14 ~ 18	105	36	HTP-16	0.8			
3910 30100120	-120	U1/2 ~ 3/4 PT1/4 ~ 3/8	120	36	HTP-16				
3910 30100135	-135	OSG Synchro Taps	135	36	HTP-16				
3910 30100150	-150	M12 ~ 14	150	36	HTP-16				
3910 30100165	-165		165	36	HTP-16				
3910 40100105	BT30 -STM30 -105	Old JIS Taps	105	46	HTP-22		FSC-22	STS-30	S-5L
3910 40100120	-120	M20 ~ 30	120	46	HTP-22	1.2			
3910 40100135	-135	U7/8 ~ 1-1/8 PT1/2 ~ 3/4	135	46	HTP-22				
3910 40100150	-150	OSG Synchro Taps	150	46	HTP-22				
3910 40100165	-165	M16 ~ 27	165	46	HTP-22				
3910 00300090	BT40 -STM8 -90	Old JIS Taps	90	21	KDP-1414	1.1	FDC-07	STS-8	Flat 17mm width
3910 00300105	-105	M4 ~ 8	105	21	KDP-1414	1.1			
3910 00300120	-120	U No8 ~ 5/16	120	21	KDP-1414	1.2			
3910 00300135	-135	OSG Synchro Taps	135	21	KDP-1414	1.2			
3910 00300150	-150	M4 ~ 6	150	21	KDP-1414	1.2			
3910 10300090	BT40 -STM12 -90	Old JIS Taps	90	26	HTP-09	1.2	FSC-09	STS-12	S-1L
3910 10300105	-105	M4 ~ 12	105	26	HTP-09	1.2			
3910 10300120	-120	U No8 ~ 7/16 PT1/8	120	26	HTP-09	1.2			
3910 10300135	-135	OSG Synchro Taps	135	26	HTP-09	1.3			
3910 10300150	-150	M4 ~ 10	150	26	HTP-09	1.3			
3910 10300180	-180		180	26	HTP-09	1.4			
3910 30300105	BT40 -STM18 -105	Old JIS Taps	105	36	HTP-16	1.4	FSC-16	STS-18	S-4L
3910 30300120	-120	M14 ~ 18	120	36	HTP-16	1.5			
3910 30300135	-135	U1/2 ~ 3/4 PT1/4 ~ 3/8	135	36	HTP-16	1.6			
3910 30300150	-150	OSG Synchro Taps	150	36	HTP-16	1.7			
3910 30300180	-180	M12 ~ 14	180	36	HTP-16				
3910 40300120	BT40 -STM30 -120	Old JIS Taps	120	46	HTP-22	1.7	FSC-22	STS-30	S-5L
3910 40300135	-135	M20 ~ 30 U7/8 ~ 1-1/8 PT1/2 ~ 3/4	135	46	HTP-22	1.8			
3910 40300150	-150	OSG Synchro Taps	150	46	HTP-22				
3910 40300180	-180	M16 ~ 27	180	46	HTP-22	2.4			
3910 00500090	BT50 -STM8 -90 ✻	Old JIS Taps	90	21	KDP-1414		FDC-07	STS-8	Flat 17mm width
3910 00500105	-105	M4 ~ 8	105	21	KDP-1414				
3910 00500120	-120	U No8 ~ 5/16	120	21	KDP-1414				
3910 00500135	-135	OSG Synchro Taps	135	21	KDP-1414				
3910 00500150	-150	M4 ~ 6	150	21	KDP-1414				
3910 00500165	-165		165	21	KDP-1414				
3910 10500090	BT50 -STM12 -90 ✻	Old JIS Taps	90	26	HTP-09		FSC-09	STS-12	S-1L
3910 10500105	-105	M4 ~ 12	105	26	HTP-09				
3910 10500120	-120	U No8 ~ 7/16 PT1/8	120	26	HTP-09				
3910 10500135	-135	OSG Synchro Taps	135	26	HTP-09				
3910 10500150	-150	M4 ~ 10	150	26	HTP-09	3.9			
3910 10500180	-180		180	26	HTP-09				

Inch to Metric (mm) → Inch × 25.4
Metric (mm) to Inch → Metric ÷ 25.4 or Metric × 0.03937

Special / Custom Sizes on request

Unit : Metric

Code	Model	Tap Size	L	D	Nut	kg	Collet	Preset Driver	Spanner
3910 30500105	BT50 -STM18 -105	Old JIS Taps	105	36	HTP-16		FSC-16	STS-18	S-4L
3910 30500120	-120	M14 ~ 18	120	36	HTP-16				
3910 30500135	-135	U1/2 ~ 3/4 PT1/4 ~ 3/8	135	36	HTP-16				
3910 30500150	-150	OSG Synchro Tap	150	36	HTP-16				
3910 30500180	-180	M12 ~ 14	180	36	HTP-16				
3910 40500120	BT50 -STM30 -120	Old JIS Taps	120	46	HTP-22		FSC-22	STS-30	S-5L
3910 40500135	-135	M20 ~ 30	135	46	HTP-22				
3910 40500150	-150	U7/8 ~ 1-1/8 PT1/2 ~ 3/4	150	46	HTP-22	4.4			
3910 40500180	-180	OSG Synchro Taps	180	46	HTP-22				
3910 40500210	-210	M16 ~ 27	210	46	HTP-22				

1.Collet, spanner and preset driver are sold separately.
2.Please see below for ℓ1dimension.
3.Tap holes smaller than M4 can be made by STM8. Collets to be used are as follows.
M1-M2.6: FDC-03007-※※ M3-M3.5: FDC-04007-※※
Tap drive will not be used for the above usages.

Collet
P. 128-129

Preset driver
P. 126-127
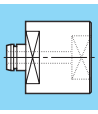

Ordering Example

BT50 - STM 18 - 120
Shank size / Holder size / Projection length (L)

ℓ1 Dimension for STM

Old JIS Taps

Without center-through coolant

Tap Size	ℓ1	ℓ1(＊)
M4 ~ 6 U No.8 ~ 1/4	21 ~ 35	21 ~ 26
M7 ~ 12 U 5/16 ~ U7/16 PT1/8	23 ~ 37	23 ~ 28
M13 ~ 15 U 1/2 ~ 5/8 PT1/4	28 ~ 42	-
M16 ~ 17	32 ~ 45	-
M18 ~ 27 U 3/4 ~ U1 PT3/8 ~ 5/8	33 ~ 47	-
M30 U1-1/8 PT3/4	38 ~ 52	-

With center-through coolant (STM8)

Tap Size	ℓ1	ℓ1(＊)
M4 ~ 6 U No.8 ~ 1/4	25 ~ 35	25 ~ 26
M7 ~ 8 U5/16	26 ~ 37	26 ~ 28

With center-through coolant (STM12 ~ 30)

Tap Size	ℓ1	ℓ1(＊)
M4 ~ 6 U No.8 ~ 1/4	24 ~ 35	24 ~ 26
M7 ~ 10 U 5/16 ~ 3/8	25 ~ 37	25 ~ 28
M11 ~ 12 U 7/16 PT 1/8	26 ~ 37	26 ~ 28
U1/2	32 ~ 42	-
M13 ~ 15 U9/16	33 ~ 42	-
U5/8 PT1/4	34 ~ 42	-
M16	35 ~ 46	-
M18 U 3/4 PT3/8	36 ~ 47	-
M20 ~ 21 PT1/2	40 ~ 47	-
M22 U 7/8	41 ~ 47	-
M23	42 ~ 47	-
M24 ~ 25 PT5/8	43 ~ 47	-
M26 ~ 27 U1	44 ~ 47	-
M28	45 ~ 52	-
M30 PT3/4	46 ~ 52	-
U 1-1/8	48 ~ 52	-

OSG Synchro Taps

Without center-through coolant

Tap Size	ℓ1	ℓ1(＊)
M4 ~ 6	21 ~ 35	21 ~ 26
M8 ~ 10	23 ~ 37	23 ~ 28
M12 ~ 14	28 ~ 42	-
M16 ~ 27	33 ~ 47	-

With center-through coolant (STM8)

Tap Size	ℓ1	ℓ1(＊)
M4 ~ 6	25 ~ 35	25 ~ 26

With center-through coolant (STM12 ~ 30)

Tap Size	ℓ1	ℓ1(＊)
M4 ~ 6	24 ~ 35	24 ~ 26
M8 ~ 10	26 ~ 37	26 ~ 28
M12	33 ~ 42	-
M14	34 ~ 42	-
M16 ~ 20	40 ~ 46	-
M22 ~ 27	44 ~ 47	-

YAMAWA X Series

Without center-through coolant

Tap Size	ℓ1	ℓ1(＊)
M6 M8	23 ~ 37	23 ~ 28
M10 M12	28 ~ 42	-

With center-through coolant (STM8)

Tap Size	ℓ1	ℓ1(＊)
M6	26 ~ 37	26 ~ 28

With center-through coolant (STM12 ~ 30)

Tap Size	ℓ1	ℓ1(＊)
M6	25 ~ 37	25 ~ 28
M8	26 ~ 37	26 ~ 28
M10	33 ~ 42	-
M12	34 ~ 42	-

Inch to Metric (mm) → Inch × 25.4
Metric (mm) to Inch → Metric ÷ 25.4 or Metric × 0.03937

Special / Custom Sizes on request

Tap size reference chart (collet, preset driver)

FDC-07 or FSC - collet

OH Type

● OH type collet should be used for center-through coolant feeding and external coolant feeding.

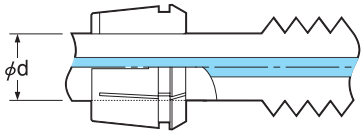

C Type

● when "collet-through" coolant feeding is needed.

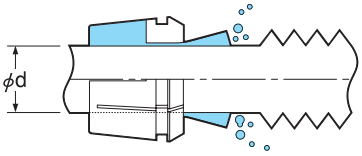

※ Please select OH type for non-coolant use.

preset driver & tool for changing driver

STS Type

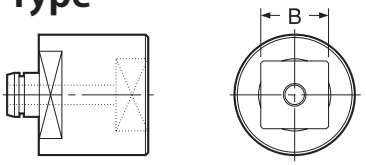

STS-R Type

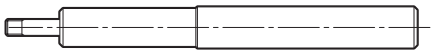

Holder Model	Tap Size					ød	Collet Model (OH or C)	B	Preset Driver	Tool for Changing Driver
	Old JIS Taps			OSG Synchro-Taps	YAMAWA X Series					
	Metric Thread	Unified Thread	Pipe Taper Thread							
STM8	M4~M4.5	UNo.8				5.0	FDC-05007-**	4.0	STS8-□4.0	STS-R0
	M5~M5.5	UNo.10~12				5.5	FDC-05507-**	4.5	STS8-□4.5	STS-R0
	M6	U1/4		M4~M6		6.0	FDC-06007-**	4.5	STS8-□4.5	STS-R0
					M6	6.0	FDC-06007-**	4.9	STS8-□4.9	STS-R0
		U5/16				6.1	FDC-06107-**	5.0	STS8-□5.0	STS-R0
	M7~8					6.2	FDC-06207-**	5.0	STS8-□5.0	STS-R0
STM12	M4~M4.5	UNo.8				5.0	FSC-09-5.0-**	4.0	STS12-□4.0	STS-R1
	M5~M5.5	UNo.10~12				5.5	FSC-09-5.5-**	4.5	STS12-□4.5	STS-R1
	M6	U1/4		M4~M6		6.0	FSC-09-6.0-**	4.5	STS12-□4.5	STS-R1
					M6	6.0	FSC-09-6.0-**	4.9	STS12-□4.9	STS-R1
		U5/16				6.1	FSC-09-6.1-**	5.0	STS12-□5.0	STS-R1
	M7~8					6.2	FSC-09-6.2-**	5.0	STS12-□5.0	STS-R1
	M9~M10	U3/8				7.0	FSC-09-7.0-**	5.5	STS12-□5.5	STS-R1
					M8	8.0	FSC-09-8.0-**	6.2	STS12-□6.2	STS-R1
	M11	U7/16	PT1/16~1/8	M8~M10		8.0	FSC-09-8.0-**	6.0	STS12-□6.0	STS-R1
	M12					8.5	FSC-09-8.5-**	6.5	STS12-□6.5	STS-R1
STM18		U1/2				9.0	FSC-16-9.0-**	7.0	STS18-□7.0	STS-R2
	M13					9.5	FSC-16-9.5-**	7.0	STS18-□7.0	STS-R2
				M12	M10	10.0	FSC-16-10.0-**	8.0	STS18-□8.0	STS-R2
	M14~15	U9/16				10.5	FSC-16-10.5-**	8.0	STS18-□8.0	STS-R2
			PT1/4			11.0	FSC-16-11.0-**	9.0	STS18-□9.0	STS-R2
		U5/8		M14	M12	12.0	FSC-16-12.0-**	9.0	STS18-□9.0	STS-R2
	M16					12.5	FSC-16-12.5-**	10.0	STS18-□10.0	STS-R2
	M17					13.0	FSC-16-13.0-**	10.0	STS18-□10.0	STS-R2
	M18~M19	U3/4	PT3/8			14.0	FSC-16-14.0-**	11.0	STS18-□11.0	STS-R2
STM30	M20					15.0	FSC-22-15.0-**	12.0	STS30-□12.0	STS-R2
	M21			M16~M20		16.0	FSC-22-16.0-**	12.0	STS30-□12.0	STS-R2
	M22	U7/8				17.0	FSC-22-17.0-**	13.0	STS30-□13.0	STS-R2
	M23		PT1/2			18.0	FSC-22-18.0-**	14.0	STS30-□14.0	STS-R2
	M24~M25		PT5/8			19.0	FSC-22-19.0-**	15.0	STS30-□15.0	STS-R2
	M26~M27	U1		M22~M27		20.0	FSC-22-20.0-**	15.0	STS30-□15.0	STS-R2
	M28					21.0	FSC-22-21.0-**	17.0	STS30-□17.0	STS-R2
		U1-1/8				22.0	FSC-22-22.0-**	17.0	STS30-□17.0	STS-R2
	M30		PT3/4			23.0	FSC-22-23.0-**	17.0	STS30-□17.0	STS-R2

Ordering Example

FSC - 22 - 20.0 - OH

- 22: Collet size
- 20.0: Collet I.D. (d)
- OH: for tool with coolant hole; C: for collet through

Combination of accessories

Tap holder	Collet	Preset driver		Nut		Tool changing driver		Spanner	
Model	Model	Model	Code	Model	Code	Model	Code	Model	Code
STM8	FDC-07	STS8	3914 0100**03	KDP-1414	0070 01001407	STS-R0	3914 00000006	Flat 17mm width	
STM12	FSC-09	STS12	3914 1100**03	HTP-09	1314 00000009	STS-R1	3914 10000006	S-1L	0803 00000011
STM18	FSC-16	STS18	3914 310***03	HTP-16	1314 00000016	STS-R2	3914 30000006	S-4L	0803 00000014
STM30	FSC-22	STS30	3914 410***03	HTP-22	1314 00000022	STS-R2	3914 30000006	S-5L	0803 00000015

Inch to Metric (mm) → Inch × 25.4
Metric (mm) to Inch → Metric ÷ 25.4 or Metric × 0.03937

Special / Custom Sizes on request

Tap size reference chart (collet, preset driver)

FDC-07 or FSC - collet

OH Type

● OH type collet should be used for center-through coolant feeding and external coolant feeding.

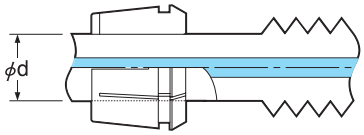

C Type

● when "collet-through" coolant feeding is needed.

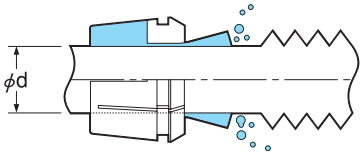

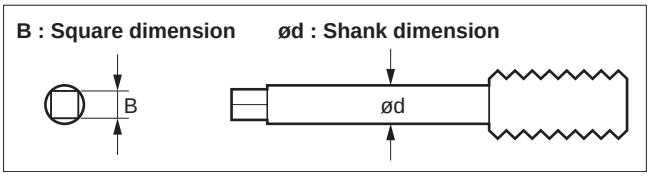

※ Please select OH type for non-coolant use.

preset driver & tool for changing driver

STS Type

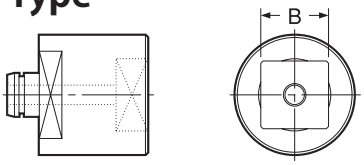

STS-R Type

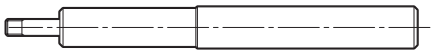

Holder Model	Tap Size (ANSI)	ød (inch)	ød (mm)	Collet Model (OH or C)	B (inch)	B (mm)	Preset Driver
STM8	#0-6	0.141	3.5814	FDC-03607**	0.110	2.794	STS8- □ 2.8
	#8	0.168	4.2672	FDC-04307**	0.131	3.3274	STS8- □ 3.4
	#10	0.194	4.9276	FDC-05007**	0.152	3.8608	STS8- □ 4.0
	#12	0.22	5.588	FDC-05607**	0.165	4.191	STS8- □ 4.2
	1/4	0.255	6.477	FDC-06507**	0.191	4.8514	STS8- □ 5.0
STM12	#0-6	0.141	3.5814	FSC-09-3.6**	0.110	2.794	STS12- □ 2.8
	#8	0.168	4.2672	FSC-09-4.3**	0.131	3.3274	STS12- □ 3.4
	#10	0.194	4.9276	FSC-09-5.0**	0.152	3.8608	STS12- □ 4.0
	#12	0.22	5.588	FSC-09-5.6**	0.165	4.191	STS12- □ 4.2
	1/4	0.255	6.477	FSC-09-6.5**	0.191	4.8514	STS12- □ 5.0
	1/8SPT	0.313	7.9502	FSC-09-8.0**	0.234	5.9436	STS12- □ 6.0
	5/16	0.318	8.0772	FSC-09-8.1**	0.238	6.0452	STS12- □ 6.1
	7/16	0.323	8.2042	FSC-09-8.3**	0.242	6.1468	STS12- □ 6.2
STM18	1/2	0.367	9.3218	FSC-16-9.4**	0.275	6.985	STS18- □ 7.0
	3/8	0.381	9.6774	FSC-16-9.7**	0.286	7.2644	STS18- □ 7.3
	9/16	0.429	10.8966	FSC-16-10.9**	0.322	8.1788	STS18- □ 8.2
	1/8LPT	0.437	11.0998	FSC-16-11.1**	0.328	8.3312	STS18- □ 8.4
	5/8	0.48	12.192	FSC-16-12.2**	0.360	9.144	STS18- □ 9.2
	11/16	0.542	13.7668	FSC-16-13.8**	0.406	10.3124	STS18- □ 10.4
	1/4PT	0.562	14.2748	FSC-16-14.3**	0.421	10.6934	STS18- □ 10.7
STM30	3/4	0.59	14.986	FSC-22-15.0**	0.442	11.2268	STS30- □ 11.3
	13/16	0.652	16.5608	FSC-22-16.6**	0.489	12.4206	STS30- □ 12.5
	7/8	0.697	17.7038	FSC-22-17.8**	0.523	13.2842	STS30- □ 13.3
	3/8PT	0.7	17.78	FSC-22-17.8**	0.531	13.4874	STS30- □ 13.5
	1	0.8	20.32	FSC-22-20.4**	0.600	15.24	STS30- □ 15.3

For DIN and ISO, please refer to P.463-464.

Ordering Example

FSC - 22 - 20.4 - OH

- 22: Collet size
- 20.4: Collet I.D. (d)
- OH: for tool with coolant hole
- C: for collet through

Combination of accessories

Tap holder	Collet	Preset driver		Nut		Tool changing driver		Spanner	
Model	Model	Model	Code	Model	Code	Model	Code	Model	Code
STM8	**FDC-07**	STS8	3914 0100**03	KDP-1414	0070 01001407	**STS-R0**	3914 00000006	**Flat 17mm width**	
STM12	**FSC-09**	STS12	3914 1100**03	**HTP-09**	1314 00000009	**STS-R1**	3914 10000006	**S-1L**	0803 00000011
STM18	**FSC-16**	STS18	3914 310***03	**HTP-16**	1314 00000016	**STS-R2**	3914 30000006	**S-4L**	0803 00000014
STM30	**FSC-22**	STS30	3914 410***03	**HTP-22**	1314 00000022	**STS-R2**	3914 30000006	**S-5L**	0803 00000015

Inch to Metric (mm) → Inch × 25.4
Metric (mm) to Inch → Metric ÷ 25.4 or Metric × 0.03937

Special / Custom Sizes on request

FSC

Collet For Tapper

FSC-OH

For tool with coolant hole

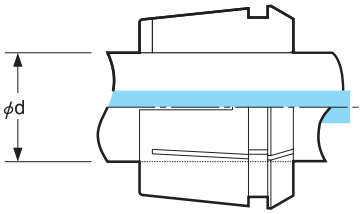

Tool Shank Dia.		Size	Code
ød (inch)	ød (mm)		
ø 0.141	ø 3.6	**FSC-09-3.6-OH**	—
ø 0.168	ø 4.3	**FSC-09-4.3-OH**	1334 00104309
ø 0.194	ø 5.0	**FSC-09-5.0-OH**	1334 00105009
ø 0.220	ø 5.6	**FSC-09-5.6-OH**	1334 00105609
ø 0.216	ø 5.5	**FSC-09-5.5-OH**	1334 00105509
ø 0.236	ø 6.0	**FSC-09-6.0-OH**	1334 00106009
ø 0.240	ø 6.1	**FSC-09-6.1-OH**	1334 00106109
ø 0.244	ø 6.2	**FSC-09-6.2-OH**	1334 00106209
ø 0.255	ø 6.5	**FSC-09-6.5-OH**	1334 00106509
ø 0.275	ø 7.0	**FSC-09-7.0-OH**	1334 00107009
ø 0.314	ø 8.0	**FSC-09-8.0-OH**	1334 00108009
ø 0.313	ø 8.0	**FSC-09-8.0-OH**	1334 00108009
ø 0.318	ø 8.1	**FSC-09-8.1-OH**	1334 00108109
ø 0.323	ø 8.3	**FSC-09-8.3-OH**	1334 00108309
ø 0.334	ø 8.5	**FSC-09-8.5-OH**	1334 00108509
ø 0.354	ø 9.0	**FSC-16-9.0-OH**	1334 00109016
ø 0.367	ø 9.4	**FSC-16-9.4-OH**	1334 00109416
ø 0.374	ø 9.5	**FSC-16-9.5-OH**	1334 00109516
ø 0.381	ø 9.7	**FSC-16-9.7-OH**	1334 00109716
ø 0.393	ø 10.0	**FSC-16-10.0-OH**	1334 00110016
ø 0.413	ø 10.5	**FSC-16-10.5-OH**	1334 00110516
ø 0.429	ø 10.9	**FSC-16-10.9-OH**	1334 00110916
ø 0.433	ø 11.0	**FSC-16-11.0-OH**	1334 00111016
ø 0.437	ø 11.1	**FSC-16-11.1-OH**	1334 00111116
ø 0.472	ø 12.0	**FSC-16-12.0-OH**	1334 00112016
ø 0.480	ø 12.2	**FSC-16-12.2-OH**	1334 00112216
ø 0.492	ø 12.5	**FSC-16-12.5-OH**	1334 00112516
ø 0.511	ø 13.0	**FSC-16-13.0-OH**	1334 00113016
ø 0.542	ø 13.8	**FSC-16-13.8-OH**	1334 00113816
ø 0.551	ø 14.0	**FSC-16-14.0-OH**	1334 00114016
ø 0.562	ø 14.3	**FSC-16-14.3-OH**	1334 00114316
ø 0.590	ø 15.0	**FSC-22-15.0-OH**	1334 00115022
ø 0.629	ø 16.0	**FSC-22-16.0-OH**	1334 00116022
ø 0.652	ø 16.6	**FSC-22-16.6-OH**	1334 00116622
ø 0.669	ø 17.0	**FSC-22-17.0-OH**	1334 00117022
ø 0.697	ø 17.8	**FSC-22-17.8-OH**	1334 00117822
ø 0.700	ø 17.8	**FSC-22-17.8-OH**	1334 00117822
ø 0.708	ø 18.0	**FSC-22-18.0-OH**	1334 00118022
ø 0.748	ø 19.0	**FSC-22-19.0-OH**	1334 00119022
ø 0.800	ø 20.4	**FSC-22-20.4-OH**	1334 00120422
ø 0.787	ø 20.0	**FSC-22-20.0-OH**	1334 00120022
ø 0.826	ø 21.0	**FSC-22-21.0-OH**	1334 00121022
ø 0.866	ø 22.0	**FSC-22-22.0-OH**	1334 00122022
ø 0.905	ø 23.0	**FSC-22-23.0-OH**	1334 00123022

FSC-C

For Collet through

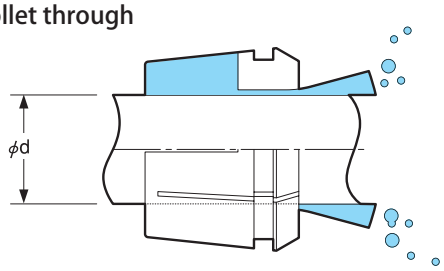

Tool Shank Dia.		Size	Code
ød (inch)	ød (mm)		
ø 0.141	ø 3.6	**FSC-09-3.6-C**	—
ø 0.168	ø 4.3	**FSC-09-4.3-C**	1335 00104309
ø 0.194	ø 5.0	**FSC-09-5.0-C**	1335 00105009
ø 0.220	ø 5.6	**FSC-09-5.6-C**	1335 00105609
ø 0.216	ø 5.5	**FSC-09-5.5-C**	1335 00105509
ø 0.236	ø 6.0	**FSC-09-6.0-C**	1335 00106009
ø 0.240	ø 6.1	**FSC-09-6.1-C**	1335 00106109
ø 0.244	ø 6.2	**FSC-09-6.2-C**	1335 00106209
ø 0.255	ø 6.5	**FSC-09-6.5-C**	1335 00106509
ø 0.275	ø 7.0	**FSC-09-7.0-C**	1335 00107009
ø 0.314	ø 8.0	**FSC-09-8.0-C**	1335 00108009
ø 0.313	ø 8.0	**FSC-09-8.0-C**	1335 00108009
ø 0.318	ø 8.1	**FSC-09-8.1-C**	1335 00108109
ø 0.323	ø 8.3	**FSC-09-8.3-C**	1335 00108309
ø 0.334	ø 8.5	**FSC-09-8.5-C**	1335 00108509
ø 0.354	ø 9.0	**FSC-16-9.0-C**	1335 00109016
ø 0.367	ø 9.4	**FSC-16-9.4-C**	1335 00109416
ø 0.374	ø 9.5	**FSC-16-9.5-C**	1335 00109516
ø 0.381	ø 9.7	**FSC-16-9.7-C**	1335 00109716
ø 0.393	ø 10.0	**FSC-16-10.0-C**	1335 00110016
ø 0.413	ø 10.5	**FSC-16-10.5-C**	1335 00110516
ø 0.429	ø 10.9	**FSC-16-10.9-C**	1335 00110916
ø 0.433	ø 11.0	**FSC-16-11.0-C**	1335 00111016
ø 0.437	ø 11.1	**FSC-16-11.1-C**	1335 00111116
ø 0.472	ø 12.0	**FSC-16-12.0-C**	1335 00112016
ø 0.480	ø 12.2	**FSC-16-12.2-C**	1335 00112216
ø 0.492	ø 12.5	**FSC-16-12.5-C**	1335 00112516
ø 0.511	ø 13.0	**FSC-16-13.0-C**	1335 00113016
ø 0.542	ø 13.8	**FSC-16-13.8-C**	1335 00113816
ø 0.551	ø 14.0	**FSC-16-14.0-C**	1335 00114016
ø 0.562	ø 14.3	**FSC-16-14.3-C**	1335 00114316
ø 0.590	ø 15.0	**FSC-22-15.0-C**	1335 00115022
ø 0.629	ø 16.0	**FSC-22-16.0-C**	1335 00116022
ø 0.652	ø 16.6	**FSC-22-16.6-C**	1335 00116622
ø 0.669	ø 17.0	**FSC-22-17.0-C**	1335 00117022
ø 0.697	ø 17.8	**FSC-22-17.8-C**	1335 00117822
ø 0.700	ø 17.8	**FSC-22-17.8-C**	1335 00117822
ø 0.708	ø 18.0	**FSC-22-18.0-C**	1335 00118022
ø 0.748	ø 19.0	**FSC-22-19.0-C**	1335 00119022
ø 0.800	ø 20.4	**FSC-22-20.4-C**	1335 00120422
ø 0.787	ø 20.0	**FSC-22-20.0-C**	1335 00120022
ø 0.826	ø 21.0	**FSC-22-21.0-C**	1335 00121022
ø 0.866	ø 22.0	**FSC-22-22.0-C**	1335 00122022
ø 0.905	ø 23.0	**FSC-22-23.0-C**	1335 00123022

OH type shall be selected in case not utilizing coolant through from the machine spindle.

Ordering Example

FSC - 16 - 9.0 - OH

16 Series — Tool Shank Dia.

Ordering Example

FSC - 16 - 9.0 - C

16 Series — Tool Shank Dia.

Inch to Metric (mm) → Inch × 25.4
Metric (mm) to Inch → Metric ÷ 25.4 or Metric × 0.03937

Special / Custom Sizes on request

FSC-MS

High-Precision Collet for Tapper (For Semidry Machining /MQL)

● Making lubricant adhere to the surface of workpiece and tool by spraying comparatively large particles alongside the tool.

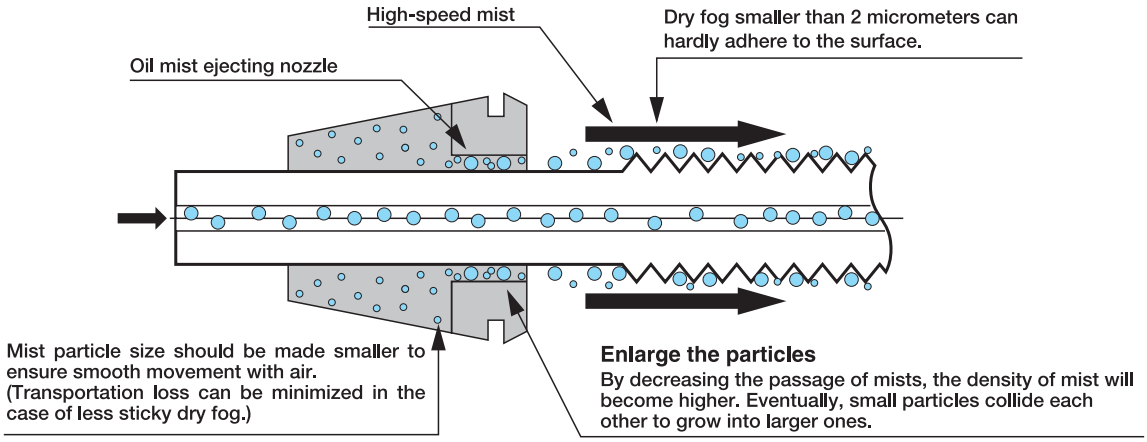

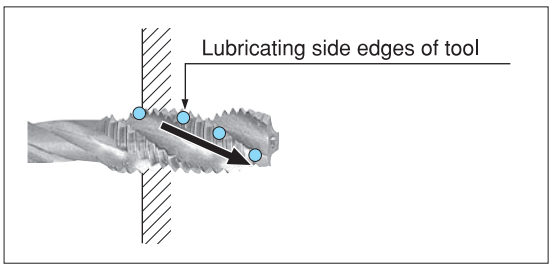

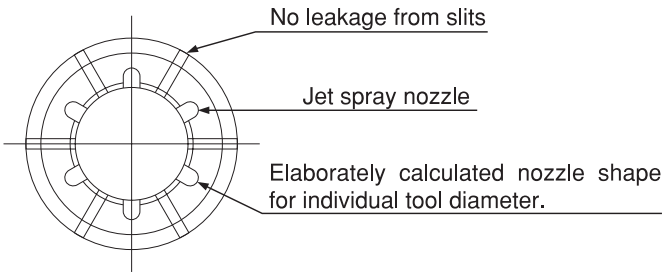

Tool Shank Dia.	Model FSC-MS	
	Size	Code
ø 5.0	FSC-09-5.0-MS	1336 00105009
ø 5.5	FSC-09-5.5-MS	1336 00105509
ø 6.0	FSC-09-6.0-MS	1336 00106009
ø 6.1	FSC-09-6.1-MS	1336 00106109
ø 6.2	FSC-09-6.2-MS	1336 00106209
ø 7.0	FSC-09-7.0-MS	1336 00107009
ø 8.0	FSC-09-8.0-MS	1336 00108009
ø 8.5	FSC-09-8.5-MS	1336 00108509
ø 9.0	FSC-16-9.0-MS	1336 00109016
ø 9.5	FSC-16-9.5-MS	1336 00109516
ø 10.0	FSC-16-10.0-MS	1336 00110016
ø 10.5	FSC-16-10.5-MS	1336 00110516
ø 11.0	FSC-16-11.0-MS	1336 00111016

Tool Shank Dia.	Model FSC-MS	
	Size	Code
ø 12.0	FSC-16-12.0-MS	1336 00112016
ø 12.5	FSC-16-12.5-MS	1336 00112516
ø 13.0	FSC-16-13.0-MS	1336 00113016
ø 14.0	FSC-16-14.0-MS	1336 00114016
ø 15.0	FSC-22-15.0-MS	1336 00115022
ø 16.0	FSC-22-16.0-MS	1336 00116022
ø 17.0	FSC-22-17.0-MS	1336 00117022
ø 18.0	FSC-22-18.0-MS	1336 00118022
ø 19.0	FSC-22-19.0-MS	1336 00119022
ø 20.0	FSC-22-20.0-MS	1336 00120022
ø 21.0	FSC-22-21.0-MS	1336 00121022
ø 22.0	FSC-22-22.0-MS	1336 00122022
ø 23.0	FSC-22-23.0-MS	1336 00123022

1.Collets collapse by 0.1mm.
2.Sizes not listed above are available upon request.
3.Tools with or without coolant holes can be used.

Ordering Example

FSC - 09 - 5.0 - MS

09 Series — Tool Shank Dia.

TP0

Synchro Tapping Chuck

● Tap projection length can be easily adjusted by turning hexagon head bolt on side surface of the holder.



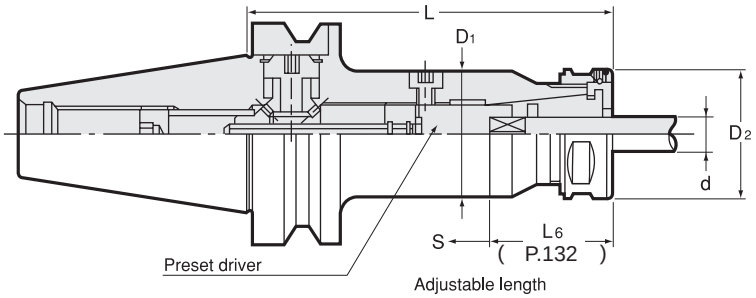

⚠ Tap sizes are based on old JIS standard.

Metric Sizes

Unit : Metric

Code	Model	Tap Size	L	S	D1	D2	kg	Collet	Spanner
2200 11090 ※※※	BT30 -TP0 -8 -90	M1 ~ M8 U1/4 ~ U5/16	90	5	20	19	0.6	ESC8	Flat 17mm
2200 11105 ※※※	-105		105	8	20	19	0.7		
2200 12075 ※※※	BT30 -TP0 -10 -75	M1 ~ M10 U1/4 ~ 3/8	75	10	28	26	0.6	ESC10	S-1L
2200 12090 ※※※	-90		90	15	28	26	0.7		
2200 12105 ※※※	-105		105	26	28	26	0.8		
2200 41090 ※※※	BT40 -TP0 -8 -90	M1 ~ M8 U1/4 ~ U5/16	90	8	20	19	1.1	ESC8	Flat 17mm
2200 41120 ※※※	-120		120	8	20	19	1.2		
2200 42090 ※※※	BT40 -TP0 -10 -90	M1 ~ M10 U1/4 ~ 3/8	90	25	28	26	1.2	ESC10	S-1L
2200 42105 ※※※	-105		105	30	28	26	1.3		
2200 42120 ※※※	-120		120	30	28	26	1.4		
2200 42135 ※※※	-135		135	30	28	26	1.4		
2200 44105 ※※※	BT40 -TP0 -16 -105	M8 ~ M16 U3/8 ~ U5/8 PIPE(PT,PS,PF)1/8 ~ 1/4	105	20	36	36	1.4	ESC16	S-4L
2200 44120 ※※※	-120		120	29	36	36	1.6		
2200 44135 ※※※	-135		135	30	36	36	1.8		
2200 45105 ※※※	BT40 -TP0 -22 -105	M14 ~ M22 U9/16 ~ U7/8 PIPE(PT,PS,PF)1/4 ~ 3/8	105	12	46	46	1.7	ESC22	S-5L
2200 45120 ※※※	-120		120	20	46	46	1.8		
2200 45135 ※※※	-135		135	30	46	46	2.1		
2200 61090 ※※※	BT50 -TP0 -8 -90	M1 ~ M8 U1/4 ~ U5/16	90	8	20	19	3.4	ESC8	Flat 17mm
2200 61120 ※※※	-120		120	8	20	19	3.8		
2200 62090 ※※※	BT50 -TP0 -10 -90	M1 ~ M10 U1/4 ~ 3/8	90	25	28	26	3.8	ESC10	S-1L
2200 62105 ※※※	-105		105	30	28	26	3.9		
2200 62120 ※※※	-120		120	30	28	26	4.0		
2200 62135 ※※※	-135		135	30	28	26	4.0		
2200 64105 ※※※	BT50 -TP0 -16 -105	M8 ~ M16 U3/8 ~ U5/8 PIPE(PT,PS,PF)1/8 ~ 1/4	105	21	36	36	4.0	ESC16	S-4L
2200 64120 ※※※	-120		120	26	36	36	4.1		
2200 64135 ※※※	-135		135	30	36	36	4.2		
2200 65105 ※※※	BT50 -TP0 -22 -105	M14 ~ M22 U9/16 ~ U7/8 PIPE(PT,PS,PF)1/4 ~ 3/8	105	13	46	46	4.0	ESC22	S-5L
2200 65120 ※※※	-120		120	27	46	46	4.3		
2200 65135 ※※※	-135		135	30	46	46	4.5		
2200 65150 ※※※	-150		150	30	46	46	4.6		
2200 65165 ※※※	-165		165	30	46	46	4.8		

1.Complete with nut and preset driver. Collet and spanner are sold separately.
2.When using OSG synchro tap, tap shank size and square size will be different from JIS standard. Please contact NT when using OSG tap.

Collet
P. 131
Spanner
P. 131





Ordering Example

BT40 - TP0 - 16 - 120 / M10J

BT40: Shank size; 16: Max. tap size; 120: Projection length (L); M10J: Tap size

Inch to Metric (mm) → Inch × 25.4
Metric (mm) to Inch → Metric ÷ 25.4 or Metric × 0.03937

Special / Custom Sizes on request

ESC - collet

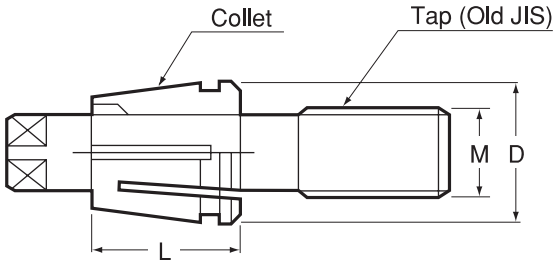

Unit : Metric

Code	Model	Holder	D	L	Tap Size
0070 20008 ※※※	**ESC 8-** ※※	TP0-8	12	18	M1 ~ M2.6
0070 20008 ※※※	**ESC 8-** ※※	TP0-8	12	18	M3 ~ M8,U1/4 ~ U5/16
0070 20010 ※※※	**ESC 10-** ※※	TP0-10	15.25	20	M1 ~ M10,U1/4 ~ U3/8
0070 20016 ※※※	**ESC 16-** ※※	TP0-16	23.88	22.5	M8 ~ M16,U3/8 ~ U5/8, PIPE (PT,PS,PF) 1/8 ~ 1/4
0070 20022 ※※※	**ESC 22-** ※※	TP0-22	32.5	24.5	M14 ~ M22,U9/16 ~ U7/8, PIPE (PT,PS,PF) 1/4 ~ 3/8

As ESC collet precisely holds tap shank, choose correct size of ESC collet.

Ordering Example

ESC10 - M10J
Max. tap size / Tap size

TPS Preset drver

Code	Model	Holder	Tap Size
2201 08000 ※※※	**TPS 8-** ※※	TP0-8	M1 ~ M8,U1/4 ~ U5/16
2401 10000 ※※※	**TPS 10-** ※※	TP0-10	M1 ~ M10,U1/4 ~ U3/8
2401 16000 ※※※	**TPS 16-** ※※	TP0-16	M8 ~ M16,U3/8 ~ U5/8, PIPE (PT,PS,PF) 1/8 ~ 1/4
2201 22000 ※※※	**TPS 22-** ※※	TP0-22	M14 ~ M22,U9/16 ~ U7/8, PIPE (PT,PS,PF) 1/4 ~ 3/8

1 pc of preset driver is included in the holder. When using other size of tap, choose correct size of TPS preset driver.

Ordering Example

TPS8 - M6J
Max. tap size / Tap size

Spanner

Code	Model	Holder
Flat 17mm width		TP0-8
0803 00000011	S-1L	TP0-10
0803 00000014	S-4L	TP0-16
0803 00000015	S-5L	TP0-22

Tapping Capacity for TP0

Unit : Metric

Tap Dimension					L6			
Metric thread	Unified thread	Whitworth thread	Shank dia ϕ	Square size	TP0-8	TP0-10	TP0-16	TP0-22
M2.6 以下			3	2.5	25.5	27.0		
M3 M3.5			4	3.2	26.5	28.0		
M4 M4.5			5	4	27.5	29.0		
M5 M5.5			5.5	4.5	27.5	29.0		
M6	U1/4	W1/4	6	4.5	27.5	29.0		
	U5/16	W5/16	6.1	5	28.5	30.0		
M8 M7			6.2	5	28.5	30.0	33.5	
M10 M9	U3/8	W3/8	7	5.5		30.0	33.5	
M11	U7/16	W7/16	8	6			34.5	
M12			8.5	6.5			34.5	
	U1/2	W1/2	9	7			35.5	
M14 M15	U9/16	W9/16	10.5	8			36.5	39.8
	U5/8	W5/8	12	9			37.5	40.8
M16			12.5	10			38.5	41.8
M17			13	10			38.5	41.8
M18	U3/4	W3/4	14	11				42.8
M20			15	12				43.8
M22	U7/8	W7/8	17	13				44.8

Unit : Metric

Tap Dimension (Pipe Tap)					L6	
PT Pipe Taper Thread	PS Parallel Screw For Pipe Taper Thread	PF Pipe Fitting parallel screw	Shank dia ϕ	Square size	TP0-16	TP0-22
1/8	1/8	1/8	8	6	34.5	
1/4	1/4	1/4	11	9	※ 37.5	※ 40.8
3/8	3/8	3/8	14	11		※ 42.8

1. For pipe tap with ※ , use a short thread tap.
2. Tap sizes are based on old JIS standard.
3. We recommend you to have ± 1.5mm leeway in tool layout, as L6 dimension is dispersed in each tap size.

Inch to Metric (mm) → Inch × 25.4
Metric (mm) to Inch → Metric ÷ 25.4 or Metric × 0.03937

Special / Custom Sizes on request

STP

Synchro Tapping Chuck

● Quick-changeable tap adapter.



STP

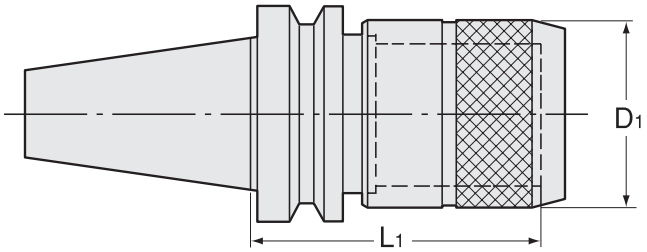

STC (Option)

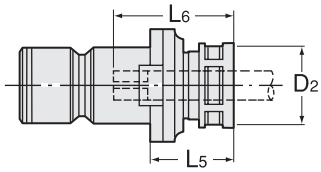

WE (Option)

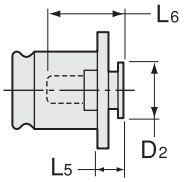

WEN (Option)

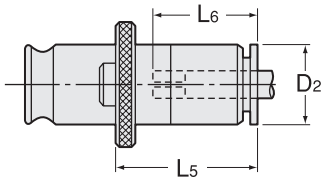

⚠ For Inch size tap, please refer to P. 463.

Unit : Metric

Code	Model	L1	D1	kg	Tap adapter	L5	D2	Tap Size			
								Metric thread	OSG synchro tap	Pipetap	ANSI
2780 01001065	**BT30 -STP1 -65**	65	38	0.6	STC1- ※※※	26	26	M3 ~ M12	M3 ~ M10	PIPE (PT,PS,PF) 1/8	#8-12, 1/4, 5/16, 7/16, 1/8SS
					WEN1B- ※※※	33	19				
					WE1- ※※※	7	19				
2780 03001065	**BT40 -STP1 -65**	65	38	1.2	STC1- ※※※	26	26	M3 ~ M12	M3 ~ M10	PIPE (PT,PS,PF) 1/8	#8-12, 1/4, 5/16, 7/16, 1/8SS
					WEN1B- ※※※	33	19				
2780 03001095	**-95**	95	38	1.4	WE1- ※※※	7	19				
2780 03002085	**BT40 -STP2 -85**	85	55	1.5	STC2 - ※※※	35	36	M8 ~ M20	M8 ~ M14	PIPE (PT,PS,PF) 1/8 PIPE (PT,PS,PF) 1/4 PIPE (PT,PS,PF) 3/8	1/4-3/4, 1/8SS, 1/8SL, 1/4P
					WEN2B- ※※※	59	30				
2780 03002115	**-115**	115	55	2.0	WE2- ※※※	11	30				
2780 05001080	**BT50 -STP1 -80**	80	38	3.8	STC1- ※※※	26	26	M3 ~ M12	M3 ~ M10	PIPE (PT,PS,PF) 1/8	#8-12, 1/4, 5/16, 7/16, 1/8SS
					WEN1B- ※※※	33	19				
2780 05001110	**-110**	110	38	4.2	WE1- ※※※	7	19				
2780 05002100	**BT50 -STP2 -100**	100	55	4.2	STC2- ※※※	35	36	M8 ~ M20	M8 ~ M14	PIPE (PT,PS,PF) 1/8 PIPE (PT,PS,PF) 1/4 PIPE (PT,PS,PF) 3/8	1/4-3/4, 1/8SS, 1/8SL, 1/4P
					WEN2B- ※※※	59	30				
2780 05002130	**-130**	130	55	4.8	WE2- ※※※	11	30				

L5 values are in the case of metric thread.

STC L6 Dimension

Please refer to P. 458 for L6 dimension of WE.
Please refer to P. 460 for L6 dimension of WEN.

Unit : Metric

STC1 L6	M3	M4	M5	M6	M8	M10	M11	M12	Pipe1/8
MIN	24	26	31	31	32	32	32	33	34
MAX	29	31	35	35	37	37	37	37	38

Unit : Metric

STC2 L6	M8	M10	M11	M12	M14	M16	M17	M18	M20	Pipe1/8	Pipe1/4	Pipe3/8
MIN	34	34	33	35	39	41	41	43	43	29	29	33
MAX	39	39	38	40	44	46	46	48	48	33	31	34

Inch to Metric (mm) → Inch × 25.4
Metric (mm) to Inch → Metric ÷ 25.4 or Metric × 0.03937

Special / Custom Sizes on request

Code	Model	Collet			Nut	Spanner
		Metric thread	Pipe tap	OSG synchro tap		
2800 00001 ※※※	**STC1-** ※※※	FDC-09		FDC-09	HDP-09B	S-1L
2800 00001 ※※※	**STC1-** ※※※		ESC10		KDP-1916	S-1L
2800 00002 ※※※	**STC2-** ※※※	FDC-16		FDC-16	HDP-16B	S-4L
2800 00002 ※※※	**STC2-** ※※※		ESC16		KDP-2825	S-4L

1. Tap size will be inserted in " ※※※ ".
2. STC adapter comes complete with collet and nut, but spanner is sold separately.
3. When using OSG synchro tap, please specify it.
   Example : STC1-M3-O
4. With FDC-OH or C collet (p.087-088) and STC Adapter, STP can be used for center-thru coolant.

STP Holder

Ordering Example

BT40 - STP1 - 95
Shank size | Adapter size | L1

STC adapter

Ordering Example

STC1 - M10
Size | Tap size

WEN•B BILZ Tap Adapter

Ordering Example

WEN1B - M10
Size | Tap size

Tap adapter WE

P.458

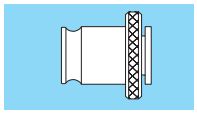

Tap adapter WEN

P.460

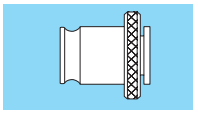

Spanner

P.095



Inch to Metric (mm) → Inch × 25.4
Metric (mm) to Inch → Metric ÷ 25.4 or Metric × 0.03937

Special / Custom Sizes on request

TP1

Quick Change Tapping Chuck

● Strong compression allows use with rolled thread tap.



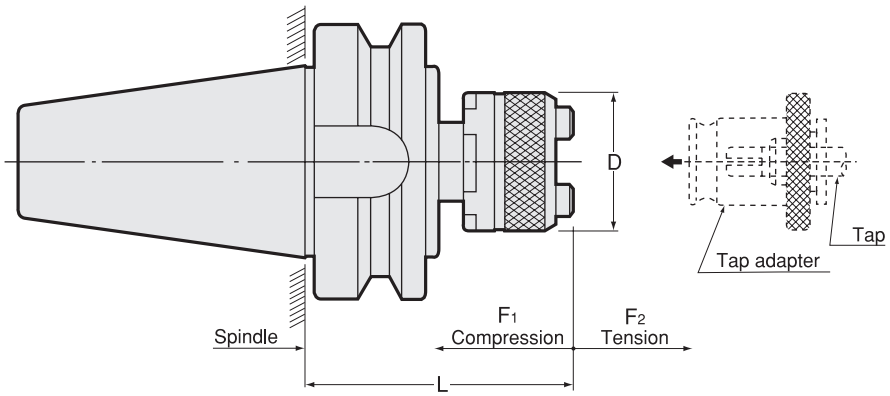

⚠ For Inch size tap, please refer to P.463.

Metric Sizes

Unit : Metric

Code	Model	Tap Size	Adapter size	L	D	Axial compensation F1	Axial compensation F2	kg
2250 30010057	**BT30 -TP1 -1 -57**	M3 ~ M12,U1/4 ~ U7/16, PIPE (PT,PS,PF) 1/8	1	57	32	6	18	0.5
2250 30020095	**BT30 -TP1 -2 -95**	M8 ~ M22,U3/8 ~ U7/8, PIPE (PT,PS,PF) 1/8 ~ 3/8	2	95	50	10	15	0.8
2250 40010062	**BT40 -TP1 -1 -62**	M3 ~ M12,U1/4 ~ U7/16, PIPE (PT,PS,PF) 1/8	1	62	32	6	18	1.1
2250 40020093	**BT40 -TP1 -2 -93**	M8 ~ M22,U3/8 ~ U7/8, PIPE (PT,PS,PF) 1/8 ~ 3/8	2	93.5	50	15	20	1.5
2250 40030164	**BT40 -TP1 -3 -164**	M16 ~ M38,U3/4 ~ 1-3/8, PIPE (PT,PS,PF) 3/8 ~ 1-1/8	3	164	72	20	20	2.6
2250 50010071	**BT50 -TP1 -1 -71**	M3 ~ M12,U1/4 ~ U7/16, PIPE (PT,PS,PF) 1/8	1	71	32	6	18	3.7
2250 50020102	**BT50 -TP1 -2 -102**	M8 ~ M22,U3/8 ~ U7/8, PIPE (PT,PS,PF) 1/8 ~ 3/8	2	104.5	50	15	20	4.0
2250 50030142	**BT50 -TP1 -3 -142**	M16 ~ M38,U3/4 ~ 1-3/8, PIPE (PT,PS,PF) 3/8 ~ 1-1/8	3	142	72	20	20	5.0
2250 50040165	**BT50 -TP1 -4 -165**	M22 ~ M48,U7/8 ~ 1-3/4, PIPE (PT,PS,PF) 3/4 ~ 1-1/2	4	165	95	22.5	22.5	6.1

1.To prevent tap breakage, use tap adapter with safety torque device.
2.Tap adapter is sold separately.

Tap adapter

P. 458

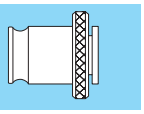

Ordering Example

BT50 - **TP1-2** - **102**

Shank size | Adapter size | Projection length(L)

TP3B

Quick Change Tapping Chuck (Auto Depth Control)

● Auto depth control mechanism stabilizes tapping depth.



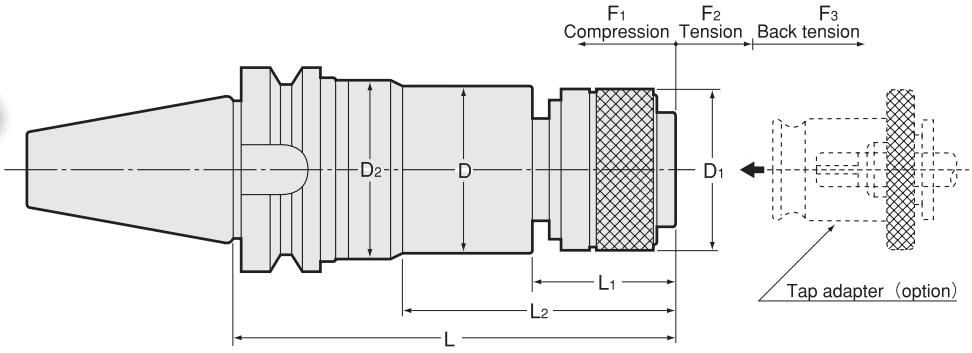

For Inch size tap, please refer to P.463.

Metric Sizes

Unit : Metric

Code	Model	Tap Size	Adapter size	L	L1	L2	D	D1	D2	Axial compensation F1	Axial compensation F2	Axial compensation F3	kg
3000 10001113	**BT30 -TP3B-1 -113**	M3 ~ M12 (M15), U1/4 ~ U7/16 (U9/16), Pipe(PT,PS,PF)1/8 ~ 1/4	1	113	30	61.5	34	32	39	0.5	4	8	0.8
3000 30001113	**BT40 -TP3B-1 -113**	M3 ~ M12 (M15), U1/4 ~ U7/16 (U9/16), Pipe(PT,PS,PF)1/8 ~ 1/4	1	113	30	61.5	34	32	39	0.5	4	8	1.4
3000 30002135	**BT40 -TP3B-2 -135**	M8 ~ M22, U3/8 ~ U7/8, Pipe(PT,PS,PF)1/8 ~ 1/2	2	135	44.5	86.5	52	50	56	0.5	5	11	2.1
3000 50001128	**BT50 -TP3B-1 -128**	M3 ~ M12 (M15), U1/4 ~ U7/16 (U9/16), Pipe(PT,PS,PF)1/8 ~ 1/4	1	128	30	61.5	34	32	39	0.5	4	8	4.1
3000 50002150	**BT50 -TP3B-2 -150**	M8 ~ M22, U3/8 ~ U7/8, Pipe(PT,PS,PF)1/8 ~ 1/2	2	150	44.5	86.5	52	50	56	0.5	5	11	4.7
3000 50003181	**BT50 -TP3B-3 -181**	M16 ~ M38, U5/8 ~ U1,3/8, Pipe(PT,PS,PF),1/4 ~ 1 1/8	3	181	65.5	119	76	72	80	0.5	6	12	6.4

1.Tap sizes in brackets are for light tapping only.
2.Tap adapter with safety torque clutch cannot be used.
3.Tap adapter is sold separately.

Tap adapter

P. 458

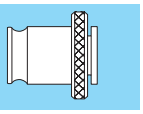

Ordering Example

BT40 - TP3B-1 - 113

Shank size | Adapter size | Projection length(L)

Inch to Metric (mm) → Inch × 25.4
Metric (mm) to Inch → Metric ÷ 25.4 or Metric × 0.03937

Special / Custom Sizes on request

How to use

In case auto depth control is used: (Blind holes, tapered screws etc.)

(1) Rapid feed from approach point
(2) Tapping by pitch
(3) Stop feed
(4) Spindle rotation more than tap self-feed (Dwell)
(5) Stop spindle and reverse
(6) Back feed

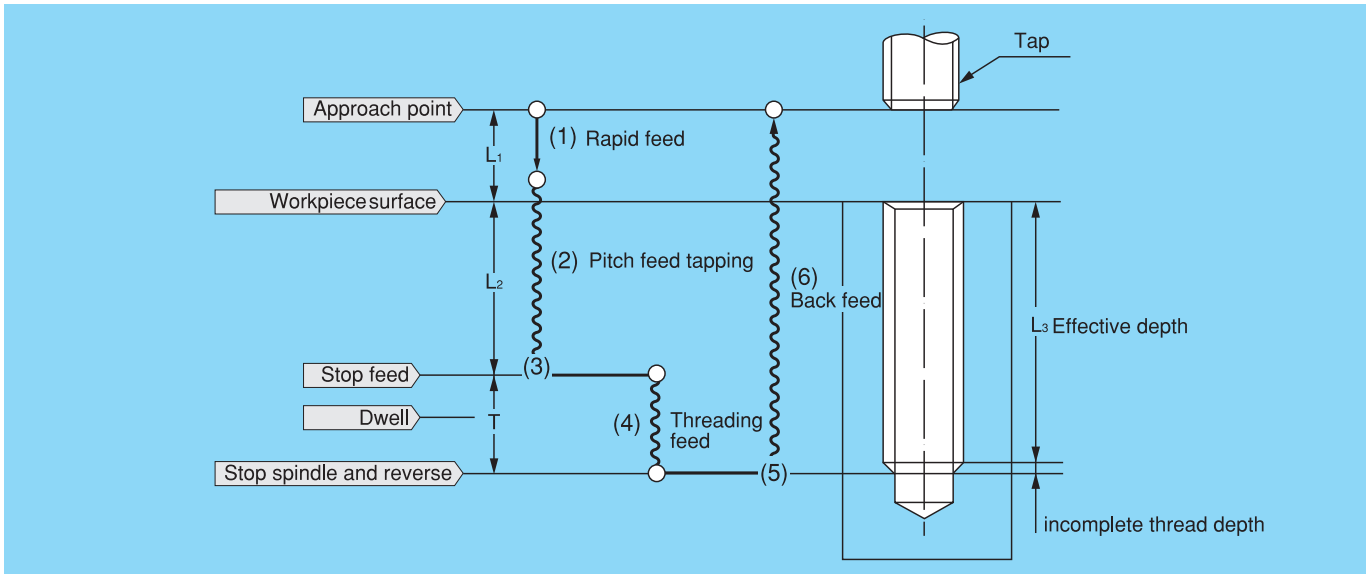

Approach L1 = 13mm or more

Cutting depth L2 =

Effective thread depth L3 + Incomplete thread length - Tension F2

$$\text{Dwell time (sec.)} = \frac{\text{Tension F2}}{\text{Tap pitch} \times \text{Rotation (min}^{-1}\text{)}} \times 60$$

In case auto depth control is not used (through hole), use TP3B as a conventional tapping chuck.

(1) Rapid feed from approach point
(2) Tapping by pitch
(3) Stop spindle and reverse
(4) Back feed
(5) Quick return

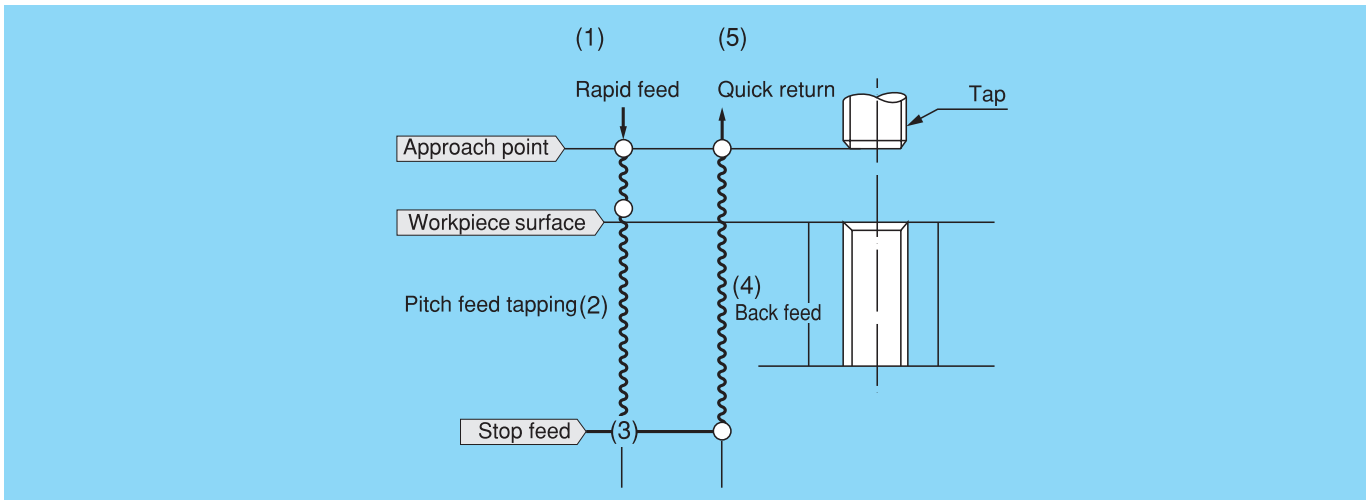

SLH

Side Lock Holder

Type 1

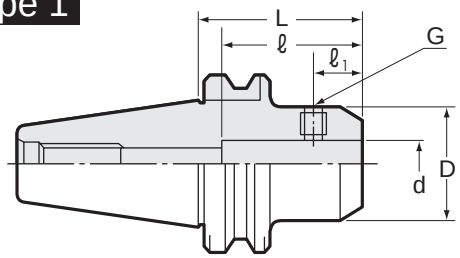

Type 2

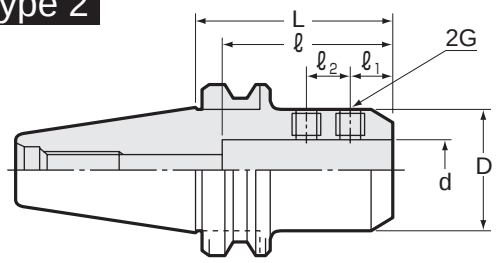

Inch Sizes

Unit : Inch

Code	Model	Type	d (H6)	D	L	ℓ	ℓ1	ℓ2	G	kg
0740 03108060	BT30 -SLH -0250 -60	1	0.250	0.790	2.362	3.000	0.437	—	1/4-28 × 1/4	
0740 03108105	-105	1	0.250	0.790	4.134	3.000	0.437	—	1/4-28 × 1/4	0.6
0740 03110060	BT30 -SLH -0313 -60	1	0.3125	0.870	2.362	3.000	0.437	—	5/16-24 × 1/4	
0740 03110105	-105	1	0.3125	0.870	4.134	3.000	0.437	—	5/16-24 × 1/4	
0740 03112060	BT30 -SLH -0375 -60	1	0.375	1.000	2.362	3.000	0.710	—	3/8-24 × 5/16	
0740 03112105	-105	1	0.375	1.000	4.134	3.000	0.710	—	3/8-24 × 5/16	
0740 03114060	BT30 -SLH -0438 -60	1	0.4375	1.380	2.362	3.000	0.710	—	7/16-20 × 3/8	
0740 03114105	-105	1	0.4375	1.380	4.134	3.000	0.710	—	7/16-20 × 3/8	
0740 03116060	BT30 -SLH -0500 -60	1	0.500	1.380	2.362	3.000	0.710	—	7/16-20 × 3/8	
0740 03116105	-105	1	0.500	1.380	4.134	3.000	0.710	—	7/16-20 × 3/8	
0740 03120060	BT30 -SLH -0625 -60	1	0.625	1.650	2.362	3.150	0.700	—	9/16-18 × 1/2	
0740 03120105	-105	1	0.625	1.650	4.134	3.150	0.700	—	9/16-18 × 1/2	
0740 03124090	BT30 -SLH -0750 -90	1	0.750	1.750	3.543	3.976	0.740	—	5/8-18 × 1/2	
0740 03124120	-120	1	0.750	1.750	4.724	3.976	0.740	—	5/8-18 × 1/2	
0740 03128090	BT30 -SLH -0875 -90	1	0.875	2.000	3.543	3.453	0.740	—	5/8-18 × 1/2	
0740 03128120	-120	1	0.875	2.000	4.724	4.331	0.740	—	5/8-18 × 1/2	
0740 03308075	BT40 -SLH -0250 -75	1	0.250	0.790	2.953	3.000	0.437	—	1/4-28 × 1/4	
0740 03308105	-105	1	0.250	0.790	4.134	3.000	0.437	—	1/4-28 × 1/4	
0740 03310075	BT40 -SLH -0313 -75	1	0.3125	0.870	2.953	3.000	0.437	—	5/16-24 × 1/4	
0740 03310105	-105	1	0.3125	0.870	4.134	3.000	0.437	—	5/16-24 × 1/4	
0740 03312075	BT40 -SLH -0375 -75	1	0.375	1.000	2.953	3.000	0.710	—	3/8-24 × 5/16	1.1
0740 03312105	-105	1	0.375	1.000	4.134	3.000	0.710	—	3/8-24 × 5/16	
0740 03314075	BT40 -SLH -0438 -75	1	0.4375	1.380	2.953	3.000	0.710	—	7/16-20 × 3/8	
0740 03314105	-105	1	0.4375	1.380	4.134	3.000	0.710	—	7/16-20 × 3/8	
0740 03316075	BT40 -SLH -0500 -75	1	0.500	1.380	2.953	3.000	0.710	—	7/16-20 × 3/8	1.3
0740 03316105	-105	1	0.500	1.380	4.134	3.000	0.710	—	7/16-20 × 3/8	
0740 03320075	BT40 -SLH -0625 -75	1	0.625	1.650	2.953	3.150	0.700	—	9/16-18 × 1/2	
0740 03320105	-105	1	0.625	1.650	4.134	3.150	0.700	—	9/16-18 × 1/2	
0740 03324075	BT40 -SLH -0750 -75	1	0.750	1.750	2.953	3.976	0.740	—	5/8-18 × 1/2	1.3
0740 03324105	-105	1	0.750	1.750	4.134	3.976	0.740	—	5/8-18 × 1/2	
0740 03328090	BT40 -SLH -0875 -90	1	0.875	2.000	3.543	4.331	0.740	—	5/8-18 × 1/2	
0740 03328135	-135	1	0.875	2.000	5.315	4.331	0.740	—	5/8-18 × 1/2	
0740 03332090	BT40 -SLH -1000 -90	1	1.000	2.360	3.543	3.543	0.860	—	3/4-16 × 11/16	
0740 03332135	-135	1	1.000	2.360	5.315	4.843	0.860	—	3/4-16 × 11/16	
0740 03340090	BT40 -SLH -1250 -90	1	1.250	2.650	3.543	3.543	0.860	—	3/4-16 × 11/16	
0740 03340135	-135	1	1.250	2.650	5.315	4.843	0.860	—	3/4-16 × 11/16	
0740 03348105	BT40 -SLH -1500 -105	1	1.500	2.990	4.134	3.543	1.181	—	3/4-16 × 11/16	
0740 03348150	-150	1	1.500	2.990	5.906	4.843	1.181	—	3/4-16 × 11/16	

Inch to Metric (mm) → Inch × 25.4
Metric (mm) to Inch → Metric ÷ 25.4 or Metric × 0.03937

Special / Custom Sizes on request

Inch Sizes

Unit : Inch

Code	Model	Type	d (H6)	D	L	ℓ	ℓ_1	ℓ_2	G	kg
0740 03508090	BT50 -SLH -0250 -90	1	0.250	0.790	3.543	3.000	0.437	—	1/4-28 × 1/4	
0740 03508135	-135	1	0.250	0.790	5.315	3.000	0.437	—	1/4-28 × 1/4	
0740 03510090	BT50 -SLH -0313 -90	1	0.3125	0.870	3.543	3.000	0.437	—	5/16-24 × 1/4	
0740 03510135	-135	1	0.3125	0.870	5.315	3.000	0.437	—	5/16-24 × 1/4	
0740 03512090	BT50 -SLH -0375 -90	1	0.375	1.000	3.543	3.000	0.710	—	3/8-24 × 5/16	
0740 03512135	-135	1	0.375	1.000	5.315	3.000	0.710	—	3/8-24 × 5/16	
0740 03514090	BT50 -SLH -0438 -90	1	0.4375	1.380	3.543	3.000	0.710	—	7/16-20 × 3/8	
0740 03514135	-135	1	0.4375	1.380	5.315	3.000	0.710	—	7/16-20 × 3/8	
0740 03516090	BT50 -SLH -0500 -90	1	0.500	1.380	3.543	3.000	0.710	—	7/16-20 × 3/8	
0740 03516135	-135	1	0.500	1.380	5.315	3.000	0.710	—	7/16-20 × 3/8	
0740 03520090	BT50 -SLH -0625 -90	1	0.625	1.650	3.543	3.150	0.700	—	9/16-18 × 1/2	
0740 03520135	-135	1	0.625	1.650	5.315	3.150	0.700	—	9/16-18 × 1/2	
0740 03524090	BT50 -SLH -0750 -90	1	0.750	1.750	3.543	3.976	0.740	—	5/8-18 × 1/2	
0740 03524135	-135	1	0.750	1.750	5.315	3.976	0.740	—	5/8-18 × 1/2	4.5
0740 03528090	BT50 -SLH -0875 -90	1	0.875	2.000	3.543	4.331	0.740	—	5/8-18 × 1/2	
0740 03528135	-135	1	0.875	2.000	5.315	4.331	0.740	—	5/8-18 × 1/2	
0740 03532105	BT50 -SLH -1000 -105	1	1.000	2.360	4.134	4.843	0.860	—	3/4-16 × 11/16	
0740 03532150	-150	1	1.000	2.360	5.906	4.843	0.860	—	3/4-16 × 11/16	
0740 03540105	BT50 -SLH -1250 -105	1	1.250	2.650	4.134	4.843	0.860	—	3/4-16 × 11/16	
0740 03540150	-150	1	1.250	2.650	5.906	4.843	0.860	—	3/4-16 × 11/16	5.8
0740 03548105	BT50 -SLH -1500 -105	1	1.500	2.990	4.134	4.843	1.181	—	3/4-16 × 11/16	
0740 03548150	-150	1	1.500	2.990	5.906	4.843	1.181	—	3/4-16 × 11/16	
0740 03564135	BT50 -SLH -2000 -135	2	2.000	3.740	5.315	4.843	1.260	1.500	1-12 × 7/8	
0740 03564165	-165	2	2.000	3.740	6.496	4.843	1.260	1.500	1-12 × 7/8	

Ordering Example

BT30 - **SLH** - **0250** - **60**

- BT30: Shank size
- 0250: I.D. (d)
- 60: Projection length (L)

Inch to Metric (mm) → Inch × 25.4
Metric (mm) to Inch → Metric ÷ 25.4 or Metric × 0.03937

Special / Custom Sizes on request

SL2

Side Lock Holder

● For JIS straight shank endmill with flat.





Type1

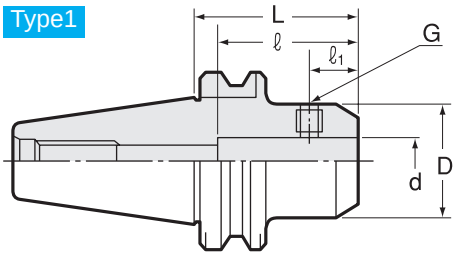

Type2

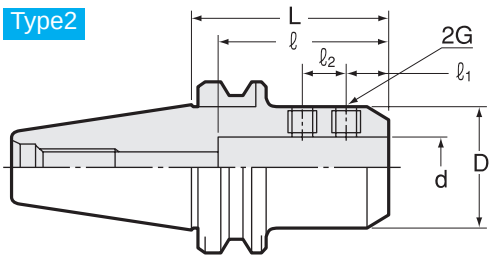

Metric Sizes

Unit : Metric

Code	Model	Type	d (H6)	D	L	ℓ1	ℓ2	ℓ	G	kg
0740 02106060	BT30 -SL2 -6 -60	1	6	25	60	18	—	36	M6	0.5
0740 02108060	-8 -60	1	8	28	60	18	—	36	M8	0.8
0740 02110060	-10 -60	1	10	35	60	20	—	40	M10	0.7
0740 02112060	-12 -60	1	12	42	60	22.5	—	45	M12	0.8
0740 02116090	-16 -90	1	16	48	90	24	—	48	M14	1.2
0740 02120090	-20 -90	1	20	52	90	25	—	50	M16	1.3
0740 02306075	BT40 -SL2 -6 -75	1	6	25	75	18	—	36	M6	1.2
0740 02308075	-8 -75	1	8	28	75	18	—	36	M8	1.2
0740 02310075	-10 -75	1	10	35	75	20	—	40	M10	1.2
0740 02312075	-12 -75	1	12	42	75	22.5	—	45	M12	1.4
0740 02316075	-16 -75	1	16	48	75	24	—	48	M14	1.5
0740 02320075	-20 -75	1	20	52	75	25	—	50	M16	1.6
0740 02325090	-25 -90	2	25	65	90	24	25	56	M18	2.3
0740 02332120	-32 -120	2	32	72	120	24	28	60	M20	3.3
0740 02506090	BT50 -SL2 -6 -90	1	6	25	90	18	—	36	M6	3.7
0740 02508090	-8 -90	1	8	28	90	18	—	36	M8	3.7
0740 02510090	-10 -90	1	10	35	90	20	—	40	M10	3.8
0740 02512090	-12 -90	1	12	42	90	22.5	—	45	M12	4.0
0740 02516090	-16 -90	1	16	48	90	24	—	48	M14	4.1
0740 02520090	-20 -90	1	20	52	90	25	—	50	M16	4.2
0740 02525105	-25 -105	2	25	65	105	24	25	56	M18	4.9
0740 02532120	-32 -120	2	32	72	120	24	28	60	M20	5.6
0740 02540120	-40 -120	2	40	80	120	30	32	70	M20	5.9
0740 02542120	-42 -120	2	42	82	120	30	32	70	M20	6.0

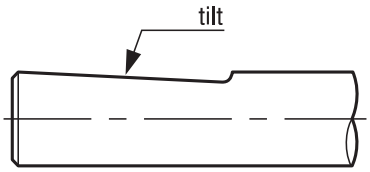

Please contact NT if the cutting tool has tilted flat on the shank.
Special tool holder that matches to the tilted flat can be manufactured.

Ordering Example

BT30 - SL2 - 6 - 60

BT30: Shank size; 6: I.D. (d); 60: Projection length (L)

Inch to Metric (mm) → Inch × 25.4
Metric (mm) to Inch → Metric ÷ 25.4 or Metric × 0.03937

Special / Custom Sizes on request

SLA

Side Lock Holder

● For straight shank boring bar with flat and straight shank boring head with flat.

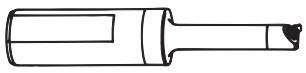

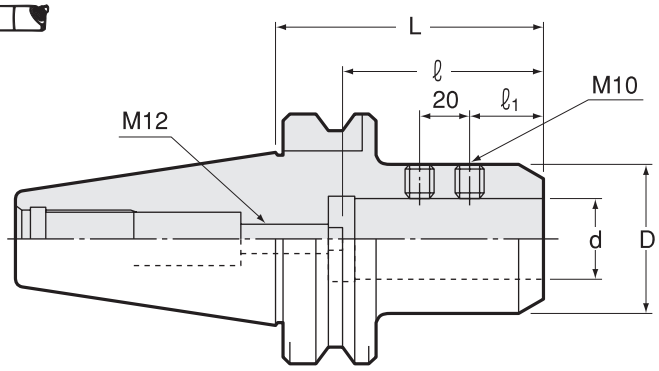



Metric Sizes

Unit : Metric

Code	Model	d (H6)	L	D	ℓ MIN	ℓ MAX	ℓ1	kg
0740 00116075	BT30 -SLA16 -75	16	75	40	55	70	25	0.8
0740 00120075	BT30 -SLA20 -75	20	75	40	55	70	25	0.8
0740 00125075	BT30 -SLA25 -75	25	75	46	55	70	25	0.8
0740 00320090	BT40 -SLA20 -90	20	90	50	55	70	25	1.8
0740 00325090	BT40 -SLA25 -90	25	90	50	55	70	25	1.7
0740 00332090	BT40 -SLA32 -90	32	90	60	65	80	30	1.9
0740 00342090	BT40 -SLA42 -90	42	90	63	65	80	30	1.6
0740 00520105	BT50 -SLA20 -105	20	105	50	55	70	25	4.4
0740 00525105	BT50 -SLA25 -105	25	105	50	55	70	25	4.3
0740 00532105	BT50 -SLA32 -105	32	105	60	65	80	30	4.5
0740 00542105	BT50 -SLA42 -105	42	105	70	65	80	30	4.7

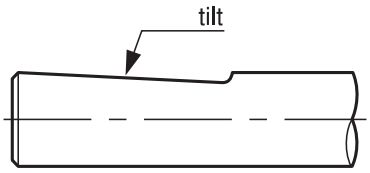

Please contact NT if the cutting tool has tilted flat on the shank.
Special tool holder that matches to the tilted flat can be manufactured.

Ordering Example

BT30 - SLA 16 - 75

- BT30: Shank size
- 16: I.D. (d)
- 75: Projection length (L)

Inch to Metric (mm) → Inch × 25.4
Metric (mm) to Inch → Metric ÷ 25.4 or Metric × 0.03937

Special / Custom Sizes on request

SLB

Side Lock Holder

Type1

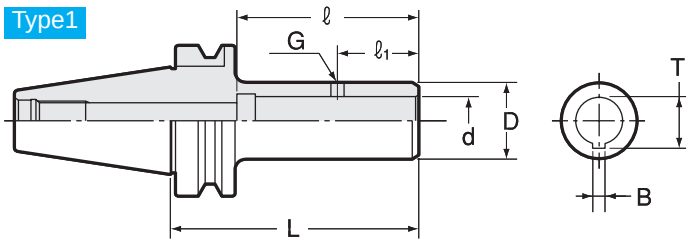

Type2

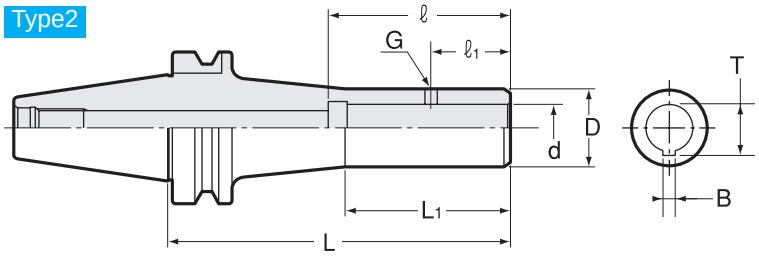

Metric Sizes

Unit : Metric

Code	Model	Type	d (H6)	L	ℓ1	ℓ	D	G	L1	B	T	kg
0740 01116075	BT30 -SLB16 -75	1	16	75	34	74	35	M8	—	5	17.3	0.5
0740 01116105	-105	1	16	105	34	74	35	M8	—	5	17.3	0.7
0740 01120075	BT30 -SLB20 -75	1	20	75	34	77	40	M8	—	5	21.3	0.7
0740 01120105	-105	1	20	105	34	77	40	M8	—	5	21.3	1.0
0740 01320105	BT40 -SLB20 -105	1	20	105	34	77	32	M6	—	5	21.3	1.5
0740 01320145	-145	2	20	145	34	77	32	M6	70	5	21.3	1.5
0740 01326105	BT40 -SLB26 -105	1	26	105	40	85	50	M10	—	5	28.2	1.8
0740 01328135	BT40 -SLB28 -135	1	28	135	38	85	40	M8	—	6	29.7	1.5
0740 01328175	-175	2	28	175	38	85	40	M8	78	6	29.7	2.1
0740 01335135	BT40 -SLB35 -135	1	35	135	55	106	60	M10	—	6	37.6	2.2
0740 01335136	BT40 -SLB35T -135	1	35	135	55	106	60	M10	—	7	38.2	2.2
0740 01336135	BT40 -SLB36 -135	1	36	135	45	106	50	M8	—	8	37.7	2.3
0740 01520135	BT50 -SLB20 -135	1	20	135	34	77	32	M6	—	5	21.3	4.5
0740 01520175	-175	2	20	175	34	77	32	M6	70	5	21.3	4.7
0740 01526105	BT50 -SLB26 -105	1	26	105	40	85	50	M10	—	5	28.2	4.4
0740 01528135	BT50 -SLB28 -135	1	28	135	38	85	40	M8	—	6	29.7	4.0
0740 01528175	-175	2	28	175	38	85	40	M8	78	6	29.7	4.6
0740 01535135	BT50 -SLB35 -135	1	35	135	55	106	60	M10	—	6	37.6	4.7
0740 01535136	BT50 -SLB35T -135	1	35	135	55	106	60	M10	—	7	38.2	4.7
0740 01536165	BT50 -SLB36 -165	1	36	165	45	106	50	M8	—	8	37.7	4.5
0740 01536205	-205	2	36	205	45	106	50	M8	98	8	37.7	5.2
0740 01548165	BT50 -SLB48 -165	1	48	165	65	129	80	M10	—	8	51.0	6.5

SLB Sub Holders

Straight drill chuck

P. 482

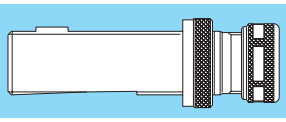

Adjustable adapter

P. 468

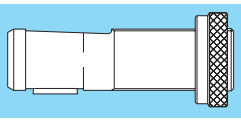

Ordering Example

BT30 - **SLB** **16** - **75**

Shank size | I.D. (d) | Projection length (L)

Inch to Metric (mm) → Inch × 25.4
Metric (mm) to Inch → Metric ÷ 25.4 or Metric × 0.03937

Special / Custom Sizes on request

FMH

Face Mill Arbor (For Cutters With Oil Hole)

● Coolant flows from the end face of centering location to cutter with oil hole.

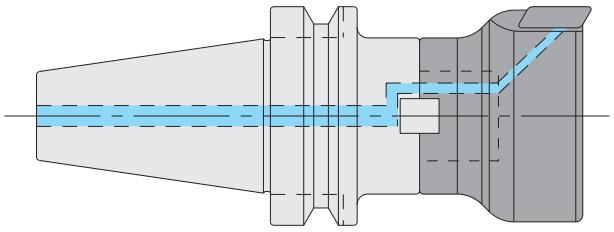

Type1

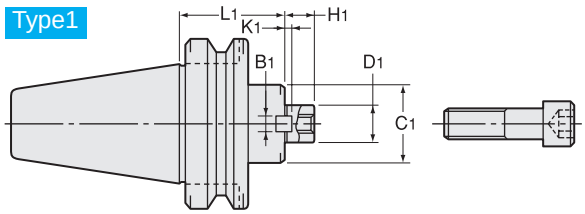

Type2

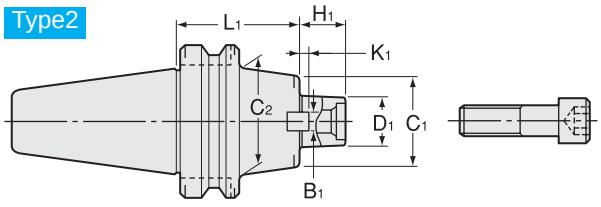

Type3

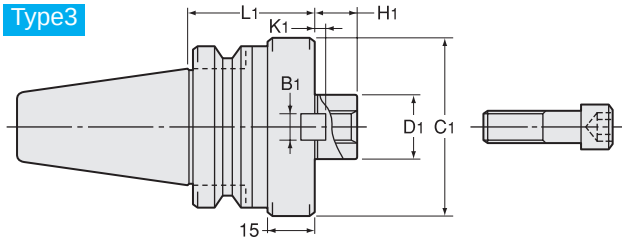

Type4

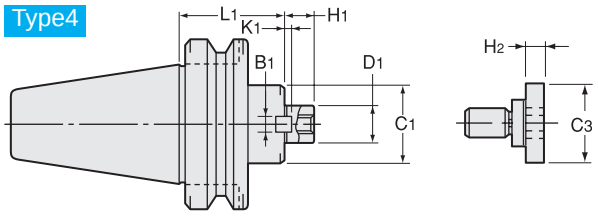

Type5

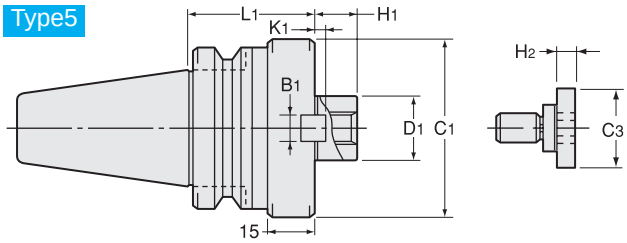

Metric Sizes

Unit : Metric

Code	Model	Type	D1	L1	C1	C2	H1	B1	K1	C3	H2	Clamp Bolt	Cutter dia. Example
0770 05116045	BT30 -FMH16 -45	1	16	45	34	—	17	8	5	—	—	M8	40 50
0770 05116060	-60	1	16	60	34	—	17	8	5	—	—	M8	40 50
0770 05122045	BT30 -FMH22 -45	1	22	45	45	—	18	10	5.6	—	—	M10	50 63
0770 05122060	-60	1	22	60	45	—	18	10	5.6	—	—	M10	50 63
0770 05125060	BT30 -FMH25.4 -60	3	25.4	60	70	—	22	9.5	5	—	—	M12	80 100 125
0770 05316045	BT40 -FMH16 -45	1	16	45	34	—	17	8	5	—	—	M8	40 50
0770 05316060	-60	1	16	60	34	—	17	8	5	—	—	M8	40 50
0770 05316075	-75	1	16	75	34	—	17	8	5	—	—	M8	40 50
0770 05316090	-90	2	16	90	34	40	17	8	5	—	—	M8	40 50
0770 05322045	BT40 -FMH22 -45	1	22	45	45	—	18	10	5.6	—	—	M10	50 63
0770 05322060	-60	1	22	60	45	—	18	10	5.6	—	—	M10	50 63
0770 05322075	-75	1	22	75	45	—	18	10	5.6	—	—	M10	50 63
0770 05322090	-90	1	22	90	45	—	18	10	5.6	—	—	M10	50 63
0770 05325060	BT40 -FMH25.4 -60	3	25.4	60	70	—	22	9.5	5	—	—	M12	80 100 125
0770 05325075	-75	3	25.4	75	70	—	22	9.5	5	—	—	M12	80 100 125
0770 05325090	-90	3	25.4	90	70	—	22	9.5	5	—	—	M12	80 100 125
0770 05331060	BT40 -FMH31.75 -60	3	31.75	60	80	—	30	12.7	7	—	—	M16	80 100
0770 05331075	-75	3	31.75	75	80	—	30	12.7	7	—	—	M16	80 100
0770 05331090	-90	3	31.75	90	80	—	30	12.7	7	—	—	M16	80 100
0770 05338060	BT40 -FMH38.1 -60	5	38.1	60	90	—	34	15.9	9	50	14	MBAH-M20	125
0770 05338075	-75	5	38.1	75	90	—	34	15.9	9	50	14	MBAH-M20	125
0770 05338090	-90	5	38.1	90	90	—	34	15.9	9	50	14	MBAH-M20	125

Inch to Metric (mm) → Inch × 25.4
Metric (mm) to Inch → Metric ÷ 25.4 or Metric × 0.03937

Special / Custom Sizes on request

Metric Sizes

Unit : Metric

Code	Model	Type	D1	L1	C1	C2	H1	B1	K1	C3	H2	Clamp Bolt	Cutter dia. Example
0770 05516045	BT50 -FMH16 -45	1	16	45	34	–	17	8	5	–	–	M8	40 50
0770 05516090	-90	2	16	90	34	40	17	8	5	–	–	M8	40 50
0770 05516150	-150	2	16	150	34	40	17	8	5	–	–	M8	40 50
0770 05516200	-200	2	16	200	34	40	17	8	5	–	–	M8	40 50
0770 05522045	BT50 -FMH22 -45	1	22	45	45	–	18	10	5.6	–	–	M10	50 63
0770 05522090	-90	1	22	90	45	–	18	10	5.6	–	–	M10	50 63
0770 05522150	-150	1	22	150	45	–	18	10	5.6	–	–	M10	50 63
0770 05522200	-200	1	22	200	45	–	18	10	5.6	–	–	M10	50 63
0770 05525045	BT50 -FMH25.4 -45	1	25.4	45	70	–	22	9.5	5	–	–	M12	80 100 125
0770 05525090	-90	2	25.4	90	70	80	22	9.5	5	–	–	M12	80 100 125
0770 05525150	-150	2	25.4	150	70	80	22	9.5	5	–	–	M12	80 100 125
0770 05525200	-200	2	25.4	200	70	80	22	9.5	5	–	–	M12	80 100 125
0770 05531045	BT50 -FMH31.75 -45	1	31.75	45	80	–	30	12.7	7	–	–	M16	80 100
0770 05531105	-105	1	31.75	105	80	–	30	12.7	7	–	–	M16	80 100
0770 05531150	-150	1	31.75	150	80	–	30	12.7	7	–	–	M16	80 100
0770 05531200	-200	1	31.75	200	80	–	30	12.7	7	–	–	M16	80 100
0770 05538045	BT50 -FMH38.1 -45	4	38.1	45	90	–	34	15.9	9	50	14	MBAH-M20	125
0770 05538075	-75	4	38.1	75	90	–	34	15.9	9	50	14	MBAH-M20	125
0770 05538105	-105	4	38.1	105	90	–	34	15.9	9	50	14	MBAH-M20	125
0770 05538150	-150	4	38.1	150	90	–	34	15.9	9	50	14	MBAH-M20	125
0770 05550045	BT50 -FMH50.8 -45	4	50.8	45	100	–	36	19.05	10	65	14	MBAH-M24	160
0770 05550075	-75	4	50.8	75	100	–	36	19.05	10	65	14	MBAH-M24	160
0770 05550105	-105	4	50.8	105	100	–	36	19.05	10	65	14	MBAH-M24	160
0770 05550150	-150	4	50.8	150	100	–	36	19.05	10	65	14	MBAH-M24	160

Clamp bolt is Included.

Ordering Example

BT30 - FMH 25.4 - 60

- BT30 - Shank size
- 25.4 - D1
- 60 - Projection length (L)

Inch to Metric (mm) → Inch × 25.4
Metric (mm) to Inch → Metric ÷ 25.4 or Metric × 0.03937

Special / Custom Sizes on request

FMA

Face Mill Arbor

● For JIS B4113 face mill.

Type1

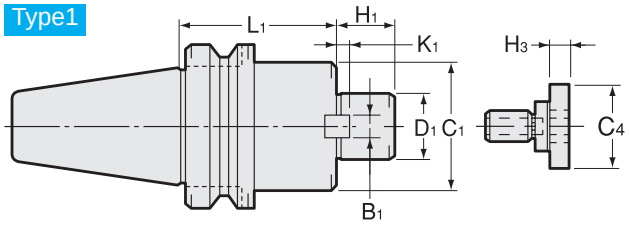

Type2

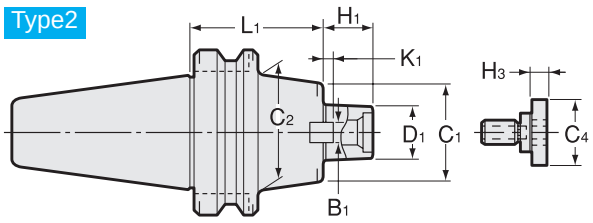

Type3

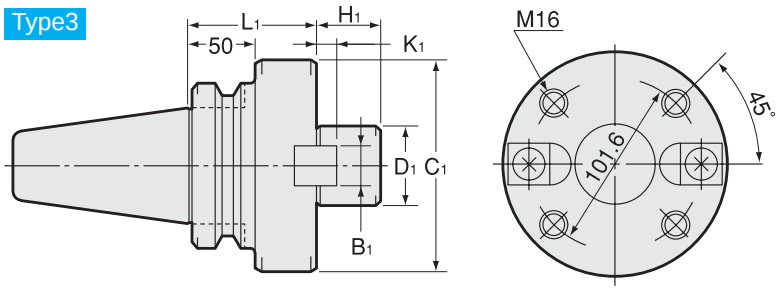



Type4

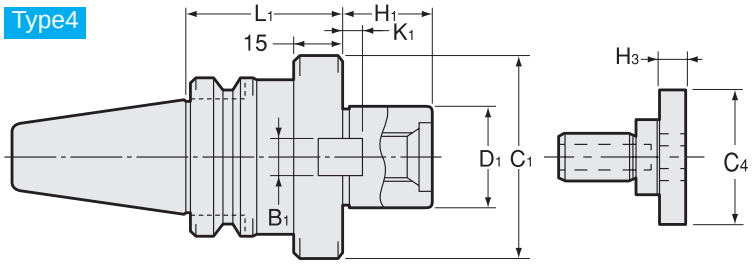

Metric Sizes

Unit : Metric

Code	Model	Type	D1 (h6)	L1	C1	C2	H1	B1	K1	C4	H3	kg	Clamp Bolt	Cutter dia. example
0770 00125045	BT30 -FMA25.4 -45	4	25.4	45	50	—	22	9.5	5	33	10	0.9	MBA-M12	80
0770 00125060	-60	4	25.4	60	50	—	22	9.5	5	33	10	1.1		
0770 00125090	-90	4	25.4	90	50	—	22	9.5	5	33	10	1.5		
0770 00325045	BT40 -FMA25.4 -45	1	25.4	45	50	—	22	9.5	5	33	10	1.5	MBA-M12	80
0770 00325090	-90	1	25.4	90	50	—	22	9.5	5	33	10	2.1		
0770 00331045	BT40 -FMA31.75 -45	1	31.75	45	60	—	30	12.7	7	40	10	1.7	MBA-M16	100
0770 00331075	-75	1	31.75	75	60	—	30	12.7	7	40	10	2.3		
0770 00338060	BT40 -FMA38.1 -60	4	38.1	60	80	—	34	15.9	9	50	14	2.5	MBA-M20	125
0770 00338090	-90	4	38.1	90	80	—	34	15.9	9	50	14	3.3		
0770 00525045	BT50 -FMA25.4 -45	1	25.4	45	50	—	22	9.5	5	33	10	4.0	MBA-M12	80
0770 00525090	-90	2	25.4	90	50	70	22	9.5	5	33	10	5.0		
0770 00525150	-150	2	25.4	150	50	70	22	9.5	5	33	10	6.4		
0770 00531045	BT50 -FMA31.75 -45	1	31.75	45	60	—	30	12.7	7	40	10	4.1	MBA-M16	100
0770 00531075	-75	2	31.75	75	60	70	30	12.7	7	40	10	4.9		
0770 00531105	-105	2	31.75	105	60	70	30	12.7	7	40	10	5.7		
0770 00538045	BT50 -FMA38.1 -45	1	38.1	45	80	—	34	15.9	9	50	14	4.4	MBA-M20	125
0770 00538075	-75	1	38.1	75	80	—	34	15.9	9	50	14	5.6		
0770 00550045	BT50 -FMA50.8 -45	1	50.8	45	100	—	36	19.05	10	65	14	5.0	MBA-M24	160
0770 00550075	-75	1	50.8	75	100	—	36	19.05	10	65	14	6.8		
0770 00547075	BT50 -FMA47.625 -75	3	47.625	75	128.57	—	38	25.4	12.5	—	—	7.9	M16	200

Clamp bolt is Included.

Ordering Example

BT40 - FMA 25.4 - 90

Shank size | D1 | Projection length (L)

Inch to Metric (mm) → Inch × 25.4
Metric (mm) to Inch → Metric ÷ 25.4 or Metric × 0.03937

Special / Custom Sizes on request

FMB

Face Mill Arbor

Type1

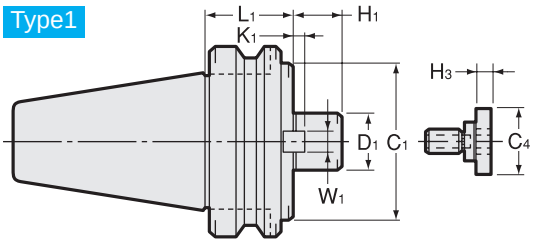

Type2

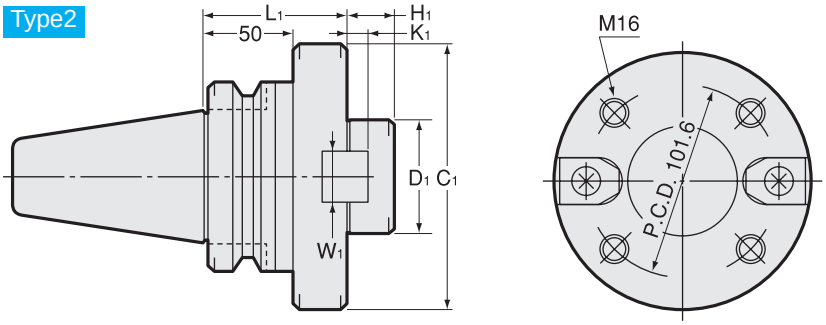

Type3

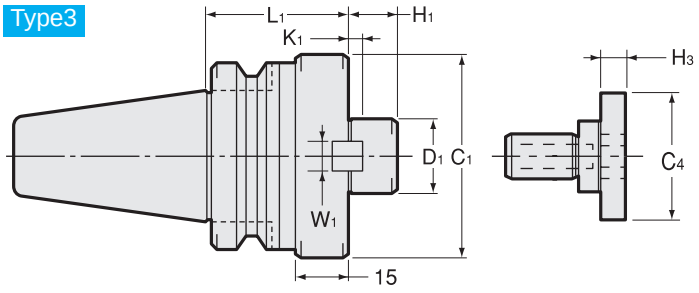

Type4

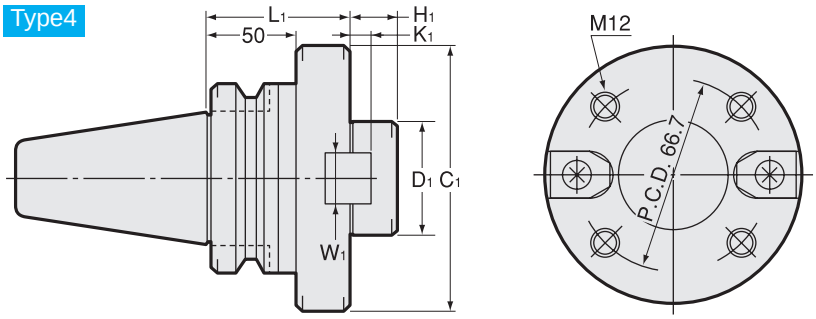

Inch to Metric (mm) → Inch × 25.4
Metric (mm) to Inch → Metric ÷ 25.4 or Metric × 0.03937

Special / Custom Sizes on request

Metric Sizes

Unit : Metric

Code	Model	Type	D1 (h6)	L1	C1	H1	W1	K1	C4	H3	kg	Clamp Bolt	Cutter dia. example
0770 01127060	BT30 -FMB27 -60	3	27	60	80	26	12	6	33	10	1.5	MBA-M12	80
0770 01327060	BT40 -FMB27 -60	3	27	60	80	26	12	6	33	10	2.2	MBA-M12	80
0770 01327090	-90	3	27	90	80	26	12	6	33	10	3.0		
0770 01340060	BT40 -FMB40 -60	3	40	60	85	26	16	8.5	50	14	2.5	MBA-M20	100 125
0770 01527045	BT50 -FMB27 -45	1	27	45	80	26	12	6	33	10	4.2	MBA-M12	80
0770 01527090	-90	1	27	90	80	26	12	6	33	10	5.9		
0770 01527150	-150	1	27	150	80	26	12	6	33	10	8.3		
0770 01540045	BT50 -FMB40 -45	1	40	45	85	26	16	8.5	50	14	4.4	MBA-M20	100 125
0770 01540075	-75	1	40	75	85	26	16	8.5	50	14	5.8		
0770 01540105	-105	1	40	105	85	26	16	8.5	50	14	7.1		
0770 01541075	BT50 -FMB40F -75	4	40	75	110	26	16	8.5	50	14	6.8	M12, MBA-M20	160
0770 01560075	BT50 -FMB60 -75	2	60	75	140	25	25.4	12.5	—	—	8.2	M16	200

Clamp bolt is Included.

Ordering Example

BT30 - **FMB** **27** - **60**

BT30: Shank size; 27: D1; 60: Projection length (L)

Inch Sizes

Unit : Metric

Code	Model	Type	D1 (h6)	L1	C1	H1	W1	K1	C4	H3	kg	Clamp Bolt	Cutter dia. example
0770 02125060	BT30 -FMB25.4 -60	3	25.4	60	80	26	9.5	5	33	10	1.5	MBA-M12	80
0770 02325060	BT40 -FMB25.4 -60	3	25.4	60	80	26	9.5	5	33	10	2.2	MBA-M12	80
0770 02325090	-90	3	25.4	90	80	26	9.5	5	33	10	2.9		
0770 02338060	-FMB38.1 -60	3	38.1	60	85	26	15.9	9	50	14	2.6	MBA-M20	100 125
0770 02525045	BT50 -FMB25.4 -45	1	25.4	45	80	26	9.5	5	33	10	4.1	MBA-M12	80
0770 02525090	-90	1	25.4	90	80	26	9.5	5	33	10	5.9		
0770 02525150	-150	1	25.4	150	80	26	9.5	5	33	10	8.4		
0770 02538045	BT50 -FMB38.1 -45	1	38.1	45	85	26	15.9	9	50	14	4.4	MBA-M20	100 125
0770 02538075	-75	1	38.1	75	85	26	15.9	9	50	14	5.7		
0770 02538105	-105	1	38.1	105	85	26	15.9	9	50	14	7.1		
0770 02539075	BT50 -FMB38.1F -75	4	38.1	75	110	26	15.9	9	50	14	5.7	M12, MBA-M20	160

Clamp bolt is Included.

Ordering Example

BT30 - **FMA** **25.4** - **60**

BT30: Shank size; 25.4: D1; 60: Projection length (L)

Inch to Metric (mm) → Inch × 25.4
Metric (mm) to Inch → Metric ÷ 25.4 or Metric × 0.03937

Special / Custom Sizes on request

FMC

Face Mill Arbor

Type1

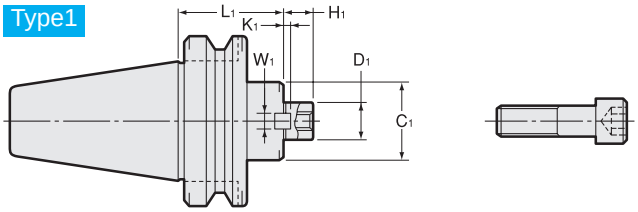

Type2

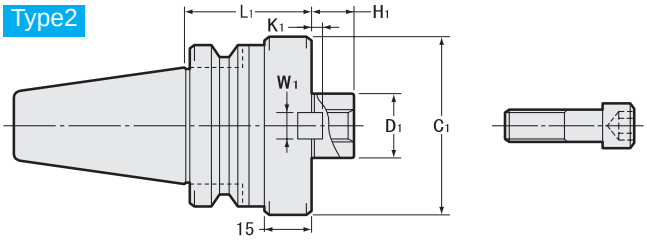

Metric Sizes

Unit : Metric

Code	Model	Type	D1 (h6)	L1	C1	H1	W1	K1	kg	Clamp Bolt JIS B1176	Cutter dia. example
0770 03122045	BT30 -FMC22 -45	1	22	45	45	18	10	5	0.8	M10	50 63
0770 03322045	BT40 -FMC22 -45	1	22	45	45	18	10	5	1.3	M10	50 63
0770 03322090	-90	1	22	90	45	18	10	5	1.9	M10	50 63
0770 03327060	BT40 -FMC27 -60	2	27	60	70	20	12	6	2.0	M12	80
0770 03327090	-90	2	27	90	70	20	12	6	2.8	M12	80
0770 03332060	BT40 -FMC32 -60	2	32	60	85	22	14	7	2.3	M16	100
0770 03332075	-75	2	32	75	85	22	14	7	2.7	M16	100
0770 03522060	BT50 -FMC22 -60	1	22	60	45	18	10	5	4.0	M10	50 63
0770 03522105	-105	1	22	105	45	18	10	5	4.6	M10	50 63
0770 03522150	-150	1	22	150	45	18	10	5	5.2	M10	50 63
0770 03527045	BT50 -FMC27 -45	1	27	45	70	20	12	6	4.0	M12	80
0770 03527090	-90	1	27	90	70	20	12	6	5.4	M12	80
0770 03527150	-150	1	27	150	70	20	12	6	7.2	M12	80
0770 03532045	BT50 -FMC32 -45	1	32	45	85	22	14	7	4.2	M16	100
0770 03532075	-75	1	32	75	85	22	14	7	5.5	M16	100
0770 03532105	-105	1	32	105	85	22	14	7	6.9	M16	100

Clamp bolt is Included.

Ordering Example

BT30 - **FMC** **27** - **45**

Shank size / D1 / Projection length (L)

Inch Sizes

Unit : Metric

Code	Model	Type	D1 (h6)	L1	C1	H1	W1	K1	kg	Clamp Bolt JIS B1176	Cutter dia. example
0770 04125060	BT30 -FMC25.4 -60	2	25.4	60	70	20	9.5	5	1.3	M12	80
0770 04325060	BT40 -FMC25.4 -60	2	25.4	60	70	20	9.5	5	2.0	M12	80
0770 04325090	-90	2	25.4	90	70	20	9.5	5	2.7	M12	80
0770 04338060	BT40 -FMC38.1 -60	2	38.1	60	85	22	15.9	7	2.3	M16	100
0770 04338075	-75	2	38.1	75	85	22	15.9	7	2.6	M16	100
0770 04525045	BT50 -FMC25.4 -45	1	25.4	45	70	20	9.5	5	4.1	M12	80
0770 04525090	-90	1	25.4	90	70	20	9.5	5	5.4	M12	80
0770 04525150	-150	1	25.4	150	70	20	9.5	5	7.2	M12	80
0770 04538045	BT50 -FMC38.1 -45	1	38.1	45	85	22	15.9	7	4.3	M16	100
0770 04538075	-75	1	38.1	75	85	22	15.9	7	5.5	M16	100
0770 04538105	-105	1	38.1	105	85	22	15.9	7	6.9	M16	100

Clamp bolt is Included.

Ordering Example

BT30 - **FMC** **25.4** - **60**

Shank size / D1 / Projection length (L)

Inch to Metric (mm) → Inch × 25.4
Metric (mm) to Inch → Metric ÷ 25.4 or Metric × 0.03937

Special / Custom Sizes on request

SM1

Shell End Mill Arbor

● For JIS B4214-1975 Shell end mill.

Type1

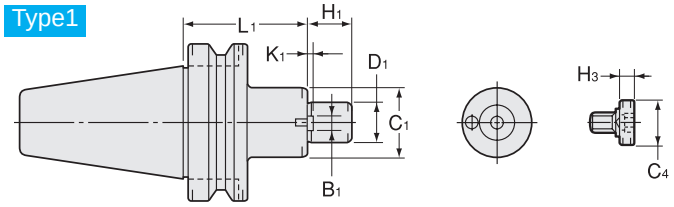

Type2

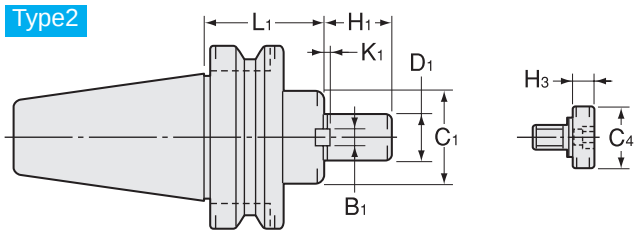

Type3

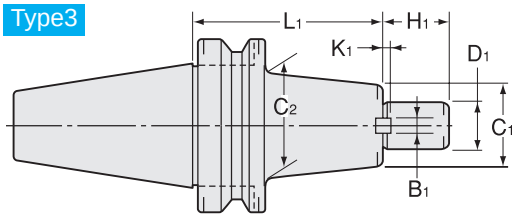

Type4

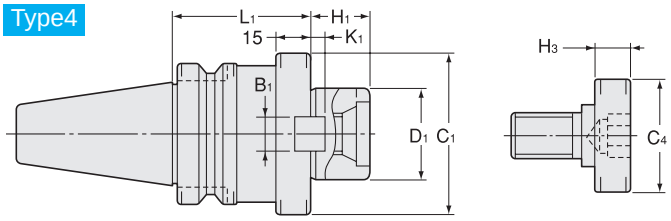

Metric Sizes

Unit : Metric

Code	Model	Type	D1 (h6)	L1	C1	C2	H1	B1	K1	C4	H3	kg	Clamp Bolt	Cutter dia. Example
0780 00116030	BT30 -SM1-16 -30	1	16	30	34	—	15	8	5	20	7	0.5	MBA-M8	40
0780 00122030	BT30 -SM1-22 -30	1	22	30	42	—	17	10	5.6	28	9	0.6	MBA-M10	50
0780 00316060	BT40 -SM1-16 -60	1	16	60	34	—	15	8	5	20	7	1.3	MBA-M8	40
0780 00316120	-120	1	16	120	34	—	15	8	5	20	7	1.7	MBA-M8	40
0780 00322060	BT40 -SM1-22 -60	1	22	60	42	—	17	10	5.6	28	9	1.5	MBA-M10	50
0780 00322120	-120	1	22	120	42	—	17	10	5.6	28	9	2.1	MBA-M10	50
0780 00327045	BT40 -SM1-27 -45	2	27	45	48	—	19	12	6.3	33	10	1.4	MBA-M12	63 80
0780 00327105	-105	2	27	105	48	—	19	12	6.3	33	10	2.3	MBA-M12	63 80
0780 00332045	BT40 -SM1-32 -45	2	32	45	58	—	24	14	7	40	10	1.6	MBA-M16	100
0780 00332075	-75	2	32	75	58	—	24	14	7	40	10	2.3	MBA-M16	100
0780 00340060	BT40 -SM1-40 -60	4	40	60	70	—	27	16	8	50	14	2.3	MBA-M20	125
0780 00516075	BT50 -SM1-16 -75	1	16	75	34	—	15	8	5	20	7	4.0	MBA-M8	40
0780 00516120	-120	1	16	120	34	—	15	8	5	20	7	6.3	MBA-M8	40
0780 00522075	BT50 -SM1-22 -75	1	22	75	42	—	17	10	5.6	28	9	4.3	MBA-M10	50
0780 00522120	-120	1	22	120	42	—	17	10	5.6	28	9	4.7	MBA-M10	50
0780 00522180	-180	1	22	180	42	—	17	10	5.6	28	9	5.3	MBA-M10	50
0780 00527060	BT50 -SM1-27 -60	2	27	60	48	—	19	12	6.3	33	10	4.2	MBA-M12	63 80
0780 00527105	-105	3	27	105	48	60	19	12	6.3	33	10	5.0	MBA-M12	63 80
0780 00527150	-150	3	27	150	48	60	19	12	6.3	33	10	5.9	MBA-M12	63 80
0780 00532045	BT50 -SM1-32 -45	2	32	45	58	—	24	14	7	40	10	4.2	MBA-M16	100
0780 00532075	-75	3	32	75	58	70	24	14	7	40	10	4.8	MBA-M16	100
0780 00532105	-105	3	32	105	58	70	24	14	7	40	10	5.6	MBA-M16	100
0780 00540075	BT50 -SM1-40 -75	3	40	75	70	80	27	16	8	50	14	5.5	MBA-M20	125
0780 00540105	-105	3	40	105	70	80	27	16	8	50	14	6.4	MBA-M20	125

Clamp bolt is Included.

Ordering Example

BT30 - SM1 - 16 - 30

BT30: Shank size; 16: D1; 30: Projection length (L)

Inch to Metric (mm) → Inch × 25.4
Metric (mm) to Inch → Metric ÷ 25.4 or Metric × 0.03937

Special / Custom Sizes on request

SMA

Shell End Mill Arbor

● For JIS B4214-1966 Shell end mill.

Type1

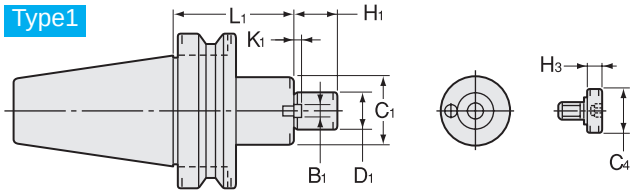

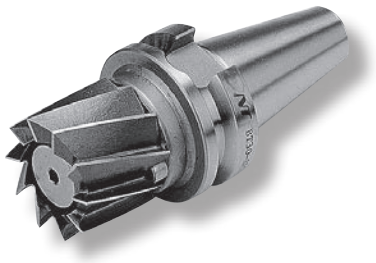

Type2

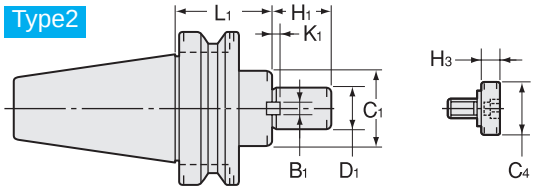

Type3

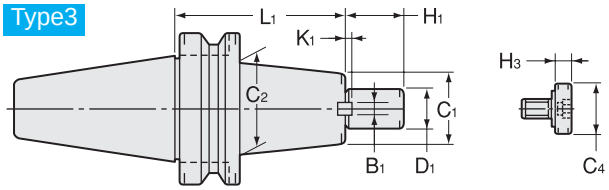

Type4

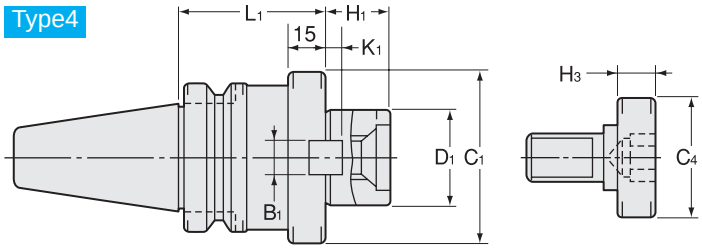

Metric Sizes

Unit : Metric

Code	Model	Type	D1 (h6)	L1	C1	C2	H1	B1	K1	C4	H3	kg	Clamp Bolt	Cutter dia. Example
0780 01116030	**BT30 -SMA16 -30**	1	16	30	34	—	17	8	3	20	7	0.5	MBA-M 8	35 40
0780 01122030	**BT30 -SMA22 -30**	1	22	30	42	—	27	8	3.5	28	9	0.6	MBA-M10	45 50
0780 01316060	**BT40 -SMA16 -60**	1	16	60	34	—	17	8	3	20	7	1.3	MBA-M 8	35 40
0780 01316120	**-120**	1	16	120	34	—	17	8	3	20	7	1.7	MBA-M 8	35 40
0780 01322060	**BT40 -SMA22 -60**	1	22	60	42	—	27	8	3.5	28	9	1.4	MBA-M10	45 50
0780 01322120	**-120**	1	22	120	42	—	27	8	3.5	28	9	2.2	MBA-M10	45 50
0780 01327045	**BT40 -SMA27 -45**	2	27	45	50	—	36	10	4	33	10	1.4	MBA-M12	60 75
0780 01327105	**-105**	2	27	105	50	—	36	10	4	33	10	2.4	MBA-M12	60 75
0780 01332045	**BT40 -SMA32 -45**	2	32	45	60	—	38	10	4.5	40	10	1.7	MBA-M16	100
0780 01332075	**-75**	2	32	75	60	—	38	10	4.5	40	10	2.3	MBA-M16	100
0780 01340060	**BT40 -SMA40 -60**	4	40	60	80	—	38	12	5	50	14	2.0	MBA-M20	125
0780 01516075	**BT50 -SMA16 -75**	1	16	75	34	—	17	8	3	20	7	4.0	MBA-M 8	35 40
0780 01516120	**-120**	1	16	120	34	—	17	8	3	20	7	4.3	MBA-M 8	35 40
0780 01522075	**BT50 -SMA22 -75**	1	22	75	42	—	27	8	3.5	28	9	4.3	MBA-M10	45 50
0780 01522120	**-120**	1	22	120	42	—	27	8	3.5	28	9	4.7	MBA-M10	45 50
0780 01522180	**-180**	1	22	180	42	—	27	8	3.5	28	9	5.4	MBA-M10	45 50
0780 01527060	**BT50 -SMA27 -60**	2	27	60	50	—	36	10	4	33	10	4.3	MBA-M12	60 75
0780 01527105	**-105**	3	27	105	50	60	36	10	4	33	10	5.2	MBA-M12	60 75
0780 01527150	**-150**	3	27	150	50	60	36	10	4	33	10	6.0	MBA-M12	60 75
0780 01532045	**BT50 -SMA32 -45**	2	32	45	60	—	38	10	4.5	40	10	4.2	MBA-M16	100
0780 01532075	**-75**	3	32	75	60	70	38	10	4.5	40	10	5.0	MBA-M16	100
0780 01532105	**-105**	3	32	105	60	70	38	10	4.5	40	10	5.7	MBA-M16	100
0780 01540045	**BT50 -SMA40 -45**	2	40	45	80	—	38	12	5	50	14	4.3	MBA-M20	125
0780 01540075	**-75**	2	40	75	80	—	38	12	5	50	14	5.7	MBA-M20	125

Clamp bolt is Included.

Inch to Metric (mm) → Inch × 25.4
Metric (mm) to Inch → Metric ÷ 25.4 or Metric × 0.03937

Special / Custom Sizes on request

Inch Sizes

Unit : Metric

Code	Model	Type	D1 (h6)	L1	C1	C2	H1	B1	K1	C4	H3	kg	Clamp Bolt	Cutter dia. Example
0780 02115030	BT30 -SMA15.875 -30	1	15.875	30	34	—	17	8	3	20	7	0.6	MBA-M 8	35 40
0780 02122030	BT30 -SMA22.225 -30	1	22.225	30	42	—	27	8	3.5	28	9	1.0	MBA-M10	45 50
0780 02315060	BT40 -SMA15.875 -60	1	15.875	60	34	—	17	8	3	20	7	1.3	MBA-M 8	35 40
0780 02315120	-120	1	15.875	120	34	—	17	8	3	20	7	1.7	MBA-M 8	35 40
0780 02322060	BT40 -SMA22.225 -60	1	22.225	60	42	—	27	8	3.5	28	9	1.5	MBA-M10	45 50
0780 02322120	-120	1	22.225	120	42	—	27	8	3.5	28	9	2.1	MBA-M10	45 50
0780 02325045	BT40 -SMA25.4 -45	2	25.4	45	50	—	36	10	4	33	10	1.4	MBA-M12	60 75
0780 02325105	-105	2	25.4	105	50	—	36	10	4	33	10	2.3	MBA-M12	60 75
0780 02331045	BT40 -SMA31.75 -45	2	31.75	45	60	—	38	10	4.5	40	10	1.6	MBA-M16	100
0780 02331075	-75	2	31.75	75	60	—	38	10	4.5	40	10	2.3	MBA-M16	100
0780 02338060	BT40 -SMA38.1 -60	4	38.1	60	80	—	38	12	5	50	14	3.0	MBA-M20	125
0780 02515075	BT50 -SMA15.875 -75	1	15.875	75	34	—	17	8	3	20	7	4.2	MBA-M 8	35 40
0780 02515120	-120	1	15.875	120	34	—	17	8	3	20	7	5.8	MBA-M 8	35 40
0780 02522075	BT50 -SMA22.225 -75	1	22.225	75	42	—	27	8	3.5	28	9	4.3	MBA-M10	45 50
0780 02522120	-120	1	22.225	120	42	—	27	8	3.5	28	9	4.7	MBA-M10	45 50
0780 02522180	-180	1	22.225	180	42	—	27	8	3.5	28	9	5.5	MBA-M10	45 50
0780 02525060	BT50 -SMA25.4 -60	2	25.4	60	50	—	36	10	4	33	10	4.3	MBA-M12	60 75
0780 02525105	-105	3	25.4	105	50	60	36	10	4	33	10	5.2	MBA-M12	60 75
0780 02525150	-150	3	25.4	150	50	60	36	10	4	33	10	6.0	MBA-M12	60 75
0780 02531045	BT50 -SMA31.75 -45	2	31.75	45	60	—	38	10	4.5	40	10	4.2	MBA-M16	100
0780 02531075	-75	3	31.75	75	60	70	38	10	4.5	40	10	4.9	MBA-M16	100
0780 02531105	-105	3	31.75	105	60	70	38	10	4.5	40	10	6.2	MBA-M16	100
0780 02538045	BT50 -SMA38.1 -45	2	38.1	45	80	—	38	12	5	50	14	4.3	MBA-M20	125
0780 02538075	-75	2	38.1	75	80	—	38	12	5	50	14	5.5	MBA-M20	125

Clamp bolt is Included.

Ordering Example

BT30 - **SMA** - **16** - **30**

- BT30: Shank size
- 16: D1
- 30: Projection length (L)

Inch to Metric (mm) → Inch × 25.4
Metric (mm) to Inch → Metric ÷ 25.4 or Metric × 0.03937

Special / Custom Sizes on request

SMB

Shell End Mill Arbor

Type1

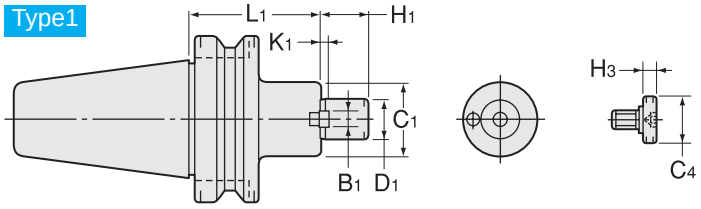

Type2

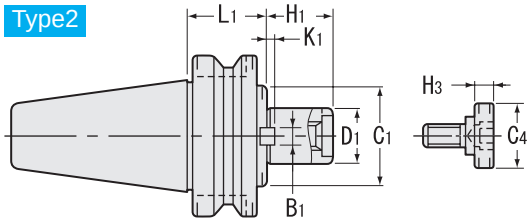

Type3

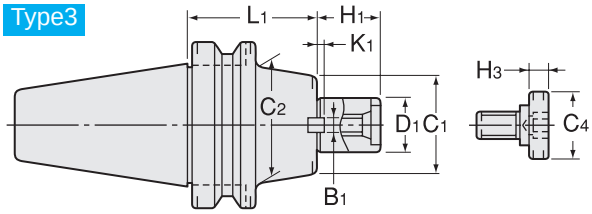

Type4

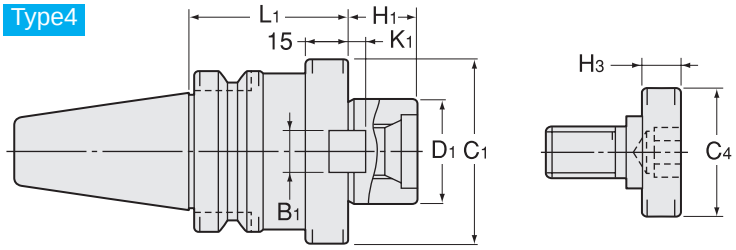

Metric Sizes

Unit : Metric

Code	Model	Type	D1 (h6)	L1	C1	C2	H1	B1	K1	C4	H3	kg	Clamp Bolt	Cutter dia. Example
0780 03122030	**BT30 -SMB22.225 -30**	1	22.225	30	45	—	17	8	3.5	28	9	0.6	MBA-M10	50
0780 03322045	**BT40 -SMB22.225 -45**	1	22.225	45	45	—	17	8	3.5	28	9	1.3	MBA-M10	50
0780 03322120	**-120**	1	22.225	120	45	—	17	8	3.5	28	9	2.2	MBA-M10	50
0780 03331045	**BT40 -SMB31.75 -45**	2	31.75	45	60	—	30	12.7	4.5	40	10	1.7	MBA-M16	75
0780 03331075	**-75**	2	31.75	75	60	—	30	12.7	4.5	40	10	2.3	MBA-M16	75
0780 03338060	**BT40 -SMB38.1 -60**	4	38.1	60	80	—	36	15.9	5	50	14	2.8	MBA-M20	100
0780 03522060	**BT50 -SMB22.225 -60**	1	22.225	60	45	—	17	8	3.5	28	9	4.3	MBA-M10	50
0780 03522120	**-120**	1	22.225	120	45	—	17	8	3.5	28	9	4.8	MBA-M10	50
0780 03522180	**-180**	1	22.225	180	45	—	17	8	3.5	28	9	5.7	MBA-M10	50
0780 03531045	**BT50 -SMB31.75 -45**	2	31.75	45	60	—	30	12.7	4.5	40	10	4.2	MBA-M16	75
0780 03531075	**-75**	3	31.75	75	60	70	30	12.7	4.5	40	10	4.9	MBA-M16	75
0780 03531105	**-105**	3	31.75	105	60	70	30	12.7	4.5	40	10	6.2	MBA-M16	75
0780 03538045	**BT50 -SMB38.1 -45**	2	38.1	45	80	—	36	15.9	5	50	14	4.3	MBA-M20	100
0780 03538075	**-75**	2	38.1	75	80	—	36	15.9	5	50	14	5.5	MBA-M20	100

Clamp bolt is Included.

Ordering Example

BT30 - SMB - 22.225 - 30

BT30: Shank size; 22.225: D1; 30: Projection length (L)

Inch to Metric (mm) → Inch × 25.4
Metric (mm) to Inch → Metric ÷ 25.4 or Metric × 0.03937

Special / Custom Sizes on request

SMC

Shell End Mill Arbor

Type1

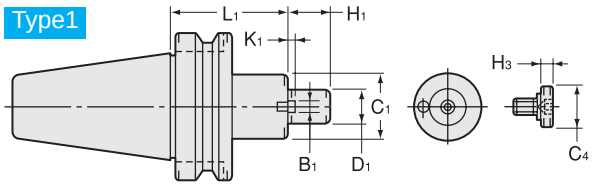

Type2

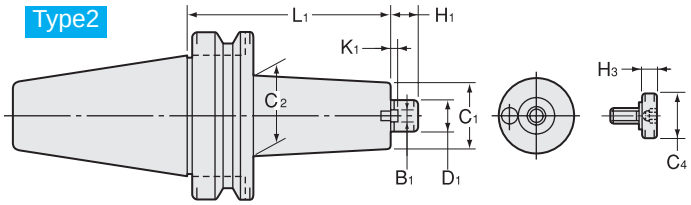

Type3

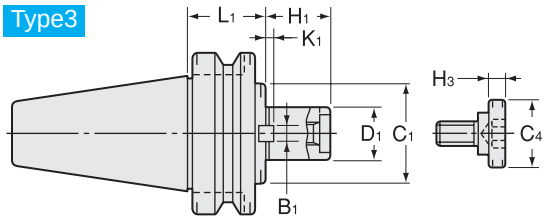

Type4

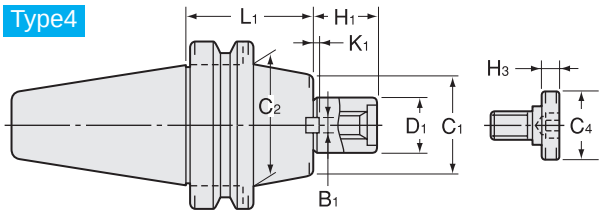

Type5

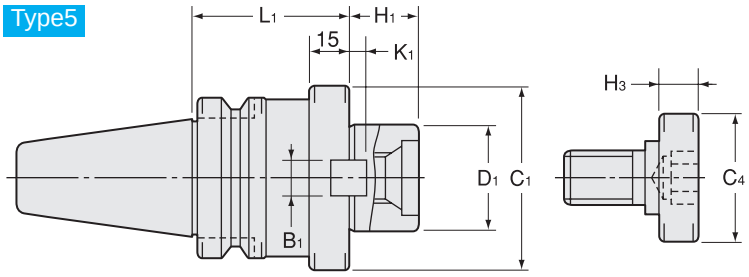

Metric Sizes

Unit : Metric

Code	Model	Type	D1 (h6)	L1	C1	C2	H1	B1	K1	C4	H3	kg	Clamp Bolt	Cutter dia. Example
0780 04319060	BT40 -SMC19.05 -60	1	19.05	60	40	—	16	8	3.5	28	9	2.4	MBA-M10	50
0780 04319120	-120	2	19.05	120	40	45	16	8	3.5	28	9	2.9	MBA-M10	50
0780 04331045	BT40 -SMC31.75 -45	3	31.75	45	60	—	18	12.7	4.5	40	10	1.6	MBA-M16	75
0780 04331105	-105	3	31.75	105	60	—	18	12.7	4.5	40	10	2.9	MBA-M16	75
0780 04338060	BT40 -SMC38.1 -60	5	38.1	60	80	—	24	15.9	5	50	14	2.4	MBA-M20	100
0780 04338090	-90	5	38.1	90	80	—	24	15.9	5	50	14	3.1	MBA-M20	100
0780 04519060	BT50 -SMC19.05 -60	1	19.05	60	40	—	16	8	3.5	28	9	4.0	MBA-M10	50
0780 04519120	-120	2	19.05	120	40	45	16	8	3.5	28	9	4.7	MBA-M10	50
0780 04519180	-180	2	19.05	180	40	45	16	8	3.5	28	9	5.6	MBA-M10	50
0780 04531045	BT50 -SMC31.75 -45	3	31.75	45	60	—	18	12.7	4.5	40	10	4.0	MBA-M16	75
0780 04531075	-75	4	31.75	75	60	70	18	12.7	4.5	40	10	4.8	MBA-M16	75
0780 04531105	-105	4	31.75	105	60	70	18	12.7	4.5	40	10	6.2	MBA-M16	75
0780 04538045	BT50 -SMC38.1 -45	3	38.1	45	80	—	24	15.9	5	50	14	4.3	MBA-M20	100
0780 04538075	-75	3	38.1	75	80	—	24	15.9	5	50	14	5.5	MBA-M20	100

Clamp bolt is Included.

Ordering Example

BT50 - SMC - 19.05 - 60

Shank size | D1 | Projection length (L)

Inch to Metric (mm) → Inch × 25.4
Metric (mm) to Inch → Metric ÷ 25.4 or Metric × 0.03937

Special / Custom Sizes on request

SCA

Side Cutter Arbor

● For JIS side cutter and metal saw.

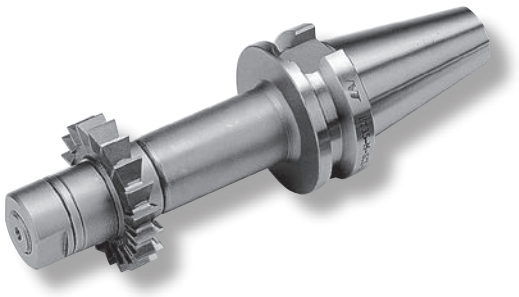

Type1

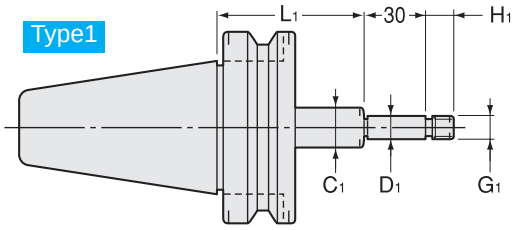

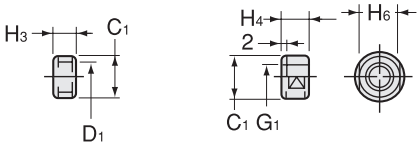

Type2

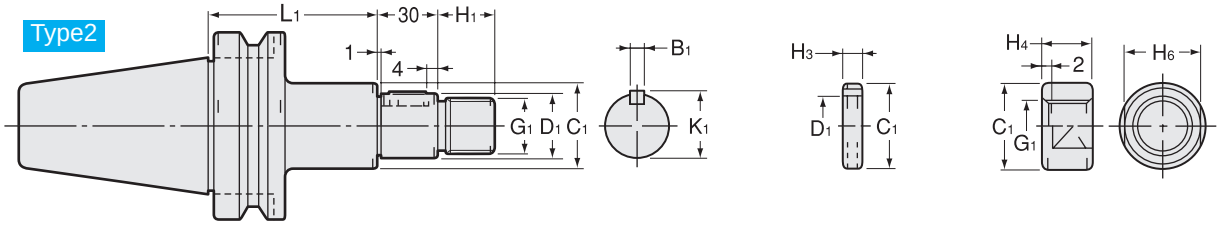

Metric Sizes

Unit : Metric

Code	Model	Type	D1 (h6)	L1	C1	G1	H1	B1	K1	H3	H4	H6	kg	Cutter dia. Example
0790 00113075	BT30 -SCA13 -75	1	13	75	20	M12 × 1.25	15	—	—	3,5,7,8,10,12	12	17	0.7	50
0790 00116075	BT30 -SCA16 -75	2	16	75	26	M14 × 1.5	16	4	17.2	3,5,7,8,10,12	13	22	0.9	50 ~ 63
0790 00122075	BT30 -SCA22 -75	2	22	75	34	M20 × 1.5	21	6	23.6	3,5,7,8,10,12	18	30	1.2	60 ~ 125
0790 00313060	BT40 -SCA13 -60	1	13	60	20	M12 × 1.25	15	—	—	3,5,7,8,10,12	12	17	1.4	50
0790 00313090	-90	1	13	90	20	M12 × 1.25	15	—	—	3,5,7,8,10,12	12	17	1.7	50
0790 00316075	BT40 -SCA16 -75	2	16	75	26	M14 × 1.5	16	4	17.2	3,5,7,8,10,12	13	22	1.4	50 ~ 63
0790 00316105	-105	2	16	105	26	M14 × 1.5	16	4	17.2	3,5,7,8,10,12	13	22	1.6	50 ~ 63
0790 00322075	BT40 -SCA22 -75	2	22	75	34	M20 × 1.5	21	6	23.6	3,5,7,8,10,12	18	30	1.7	60 ~ 125
0790 00322120	-120	2	22	120	34	M20 × 1.5	21	6	23.6	3,5,7,8,10,12	18	30	2.1	60 ~ 125
0790 00327075	BT40 -SCA27 -75	2	27	75	40	M24 × 2	25	7	29	3,5,7,8,10,12	21	32	2.0	75 ~ 100
0790 00327120	-120	2	27	120	40	M24 × 2	25	7	29	3,5,7,8,10,12	21	32	2.4	75 ~ 100
0790 00332090	BT40 -SCA32 -90	2	32	90	46	M30 × 2	30	8	34	3,5,7,8,10,12	26	41	2.6	100 ~ 250
0790 00513075	BT50 -SCA13 -75	1	13	75	20	M12 × 1.25	15	—	—	3,5,7,8,10,12	12	17	4.3	50
0790 00513105	-105	1	13	105	20	M12 × 1.25	15	—	—	3,5,7,8,10,12	12	17	4.4	50
0790 00516090	BT50 -SCA16 -90	2	16	90	26	M14 × 1.5	16	4	17.2	3,5,7,8,10,12	13	22	4.1	50 ~ 63
0790 00516120	-120	2	16	120	26	M14 × 1.5	16	4	17.2	3,5,7,8,10,12	13	22	4.2	50 ~ 63
0790 00522090	BT50 -SCA22 -90	2	22	90	34	M20 × 1.5	21	6	23.6	3,5,7,8,10,12	18	30	4.4	60 ~ 125
0790 00522135	-135	2	22	135	34	M20 × 1.5	21	6	23.6	3,5,7,8,10,12	18	30	4.7	60 ~ 125
0790 00527090	BT50 -SCA27 -90	2	27	90	40	M24 × 2	25	7	29	3,5,7,8,10,12	21	32	4.5	75 ~ 100
0790 00527135	-135	2	27	135	40	M24 × 2	25	7	29	3,5,7,8,10,12	21	32	4.9	75 ~ 100
0790 00532090	BT50 -SCA32 -90	2	32	90	46	M30 × 2	30	8	34	3,5,7,8,10,12	26	41	4.9	100 ~ 250
0790 00532135	-135	2	32	135	46	M30 × 2	30	8	34	3,5,7,8,10,12	26	41	5.7	100 ~ 250
0790 00540090	BT50 -SCA40 -90	2	40	90	55	M36 × 3	36	10	42.5	3,5,7,8,10,12	31	46	5.9	150 ~ 315
0790 00540135	-135	2	40	135	55	M36 × 3	36	10	42.5	3,5,7,8,10,12	31	46	6.7	150 ~ 315

Inch to Metric (mm) → Inch × 25.4
Metric (mm) to Inch → Metric ÷ 25.4 or Metric × 0.03937

Special / Custom Sizes on request

Inch Sizes

Unit : Metric

Code	Model	Type	D1 (h6)	L1	C1	G1	H1	B1	K1	H3	H4	H6	kg	Cutter dia. Example
0790 01112075	BT30 -SCA12.7 -75	1	12.7	75	20	M12 × 1.25	15	—	—	3,5,7,8,10,12	12	17	1.0	50
0790 01115075	BT30 -SCA15.875 -75	2	15.875	75	26	M14 × 1.5	16	3.18	17.42	3,5,7,8,10,12	13	22	1.2	50 ~ 63
0790 01122075	BT30 -SCA22.225 -75	2	22.225	75	34	M20 × 1.5	21	3.18	23.82	3,5,7,8,10,12	18	30	1.5	60 ~ 63
0790 01312060	BT40 -SCA12.7 -60	1	12.7	60	20	M12 × 1.25	15	—	—	3,5,7,8,10,12	12	17	1.4	50
0790 01312090	-90	1	12.7	90	20	M12 × 1.25	15	—	—	3,5,7,8,10,12	12	17	1.7	50
0790 01315075	BT40 -SCA15.875 -75	2	15.875	75	26	M14 × 1.5	16	3.18	17.42	3,5,7,8,10,12	13	22	1.4	50 ~ 63
0790 01315105	-105	2	15.875	105	26	M14 × 1.5	16	3.18	17.42	3,5,7,8,10,12	13	22	1.5	50 ~ 63
0790 01322075	BT40 -SCA22.225 -75	2	22.225	75	34	M20 × 1.5	21	3.18	23.82	3,5,7,8,10,12	18	30	1.7	60 ~ 63
0790 01322120	-120	2	22.225	120	34	M20 × 1.5	21	3.18	23.82	3,5,7,8,10,12	18	30	2.0	60 ~ 63
0790 01325075	BT40 -SCA25.4 -75	2	25.4	75	40	M24 × 2	25	6.35	27.78	3,5,7,8,10,12	21	32	2.0	75 ~ 125
0790 01325120	-120	2	25.4	120	40	M24 × 2	25	6.35	27.78	3,5,7,8,10,12	21	32	2.4	75 ~ 125
0790 01331090	BT40 -SCA31.75 -90	2	31.75	90	46	M30 × 2	30	7.92	34.92	3,5,7,8,10,12	26	41	2.6	100 ~ 250
0790 01512075	BT50 -SCA12.7 -75	1	12.7	75	20	M12 × 1.25	15	—	—	3,5,7,8,10,12	12	17	4.3	50
0790 01512105	-105	1	12.7	105	20	M12 × 1.25	15	—	—	3,5,7,8,10,12	12	17	4.4	50
0790 01515090	BT50 -SCA15.875 -90	2	15.875	90	26	M14 × 1.5	16	3.18	17.42	3,5,7,8,10,12	13	22	4.2	50 ~ 63
0790 01515120	-120	2	15.875	120	26	M14 × 1.5	16	3.18	17.42	3,5,7,8,10,12	13	22	4.4	50 ~ 63
0790 01522090	BT50 -SCA22.225 -90	2	22.225	90	34	M20 × 1.5	21	3.18	23.82	3,5,7,8,10,12	18	30	4.4	60 ~ 63
0790 01522135	-135	2	22.225	135	34	M20 × 1.5	21	3.18	23.82	3,5,7,8,10,12	18	30	4.7	60 ~ 63
0790 01525090	BT50 -SCA25.4 -90	2	25.4	90	40	M24 × 2	25	6.35	27.78	3,5,7,8,10,12	21	32	4.5	75 ~ 125
0790 01525135	-135	2	25.4	135	40	M24 × 2	25	6.35	27.78	3,5,7,8,10,12	21	32	4.9	75 ~ 125
0790 01531090	BT50 -SCA31.75 -90	2	31.75	90	46	M30 × 2	30	7.92	34.92	3,5,7,8,10,12	26	41	4.7	100 ~ 250
0790 01531135	-135	2	31.75	135	46	M30 × 2	30	7.92	34.92	3,5,7,8,10,12	26	41	5.2	100 ~ 250
0790 01538090	BT50 -SCA38.1 -90	2	38.1	90	55	M36 × 3	36	9.52	42.06	3,5,7,8,10,12	31	46	4.9	150 ~ 315
0790 01538135	-135	2	38.1	135	55	M36 × 3	36	9.52	42.06	3,5,7,8,10,12	31	46	5.9	150 ~ 315

One clamp nut and spacers (size 3, 5, 7, 8, 10, and 12 / one each) are included.

Ordering Example

BT30 - SCA 12.7 - 75

- BT30: Shank size
- 12.7: D1
- 75: Projection length (L)

Inch to Metric (mm) → Inch × 25.4
Metric (mm) to Inch → Metric ÷ 25.4 or Metric × 0.03937

Special / Custom Sizes on request

JTA

Jacobs Taper Arbor

● Arbor for Jacobs taper keyless chuck.



Type1

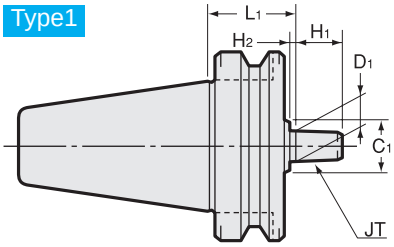

Type2

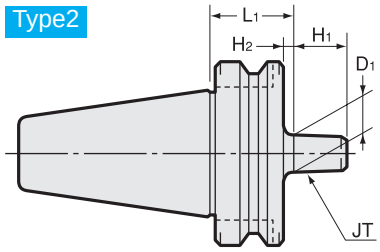

Metric Sizes

Unit : Metric

Code	Model	Type	JT	L1	D1	C1	H1	H2	kg
0750 00101030	**BT30 -JTA1 -30**	1	1	30	9.754	30	15	3	0.5
0750 00122030	**BT30 -JTA2S -30**	1	2short	30	13.940	30	18	3	0.5
0750 00102030	**BT30 -JTA2 -30**	1	2	30	14.199	30	20	4	0.5
0750 00133030	**BT30 -JTA33 -30**	1	33	30	15.850	30	24	4	0.5
0750 00106030	**BT30 -JTA6 -30**	1	6	30	17.170	30	24	4	0.5
0750 00103030	**BT30 -JTA3 -30**	1	3	30	20.599	35	28	5	0.5
0750 00301045	**BT40 -JTA1 -45**	1	1	45	9.754	30	15	3	1.1
0750 00301090	**-90**	1	1	90	9.754	30	15	3	1.4
0750 00322045	**BT40 -JTA2S -45**	1	2short	45	13.940	30	18	3	1.1
0750 00322090	**-90**	1	2short	90	13.940	30	18	3	1.4
0750 00302045	**BT40 -JTA2 -45**	1	2	45	14.199	30	20	4	1.1
0750 00302090	**-90**	1	2	90	14.199	30	20	4	1.4
0750 00333045	**BT40 -JTA33 -45**	1	33	45	15.850	30	24	4	1.1
0750 00333090	**-90**	1	33	90	15.850	30	24	4	1.4
0750 00306045	**BT40 -JTA6 -45**	1	6	45	17.170	30	24	4	1.2
0750 00306090	**-90**	1	6	90	17.170	30	24	4	1.4
0750 00303045	**BT40 -JTA3 -45**	1	3	45	20.599	35	28	5	1.2
0750 00303090	**-90**	1	3	90	20.599	35	28	5	1.5
0750 00501045	**BT50 -JTA1 -45**	1	1	45	9.754	30	15	3	3.7
0750 00501105	**-105**	1	1	105	9.754	30	15	3	4.1
0750 00522045	**BT50 -JTA2S -45**	1	2short	45	13.940	30	18	3	4.0
0750 00522105	**-105**	1	2short	105	13.940	30	18	3	4.1
0750 00502045	**BT50 -JTA2 -45**	1	2	45	14.199	30	20	4	4.0
0750 00502105	**-105**	1	2	105	14.199	30	20	4	4.4
0750 00533045	**BT50 -JTA33 -45**	1	33	45	15.850	30	24	4	3.8
0750 00533105	**-105**	1	33	105	15.850	30	24	4	4.4
0750 00506045	**BT50 -JTA6 -45**	1	6	45	17.170	30	24	4	4.0
0750 00506105	**-105**	1	6	105	17.170	30	24	4	4.4
0750 00503045	**BT50 -JTA3 -45**	2	3	45	20.599	—	28	7	4.0
0750 00503105	**-105**	1	3	105	20.599	35	28	5	4.6

Ordering Example

BT30 - JTA1 - 30

Shank size | JT1 | Projection length (L)

Inch to Metric (mm) → Inch × 25.4
Metric (mm) to Inch → Metric ÷ 25.4 or Metric × 0.03937

Special / Custom Sizes on request

MTA

Morse Taper Holder

● For Morse taper shank with tang.

Type1

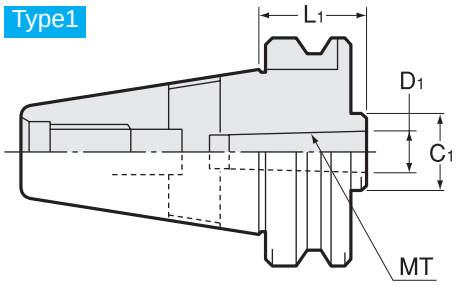

Type2

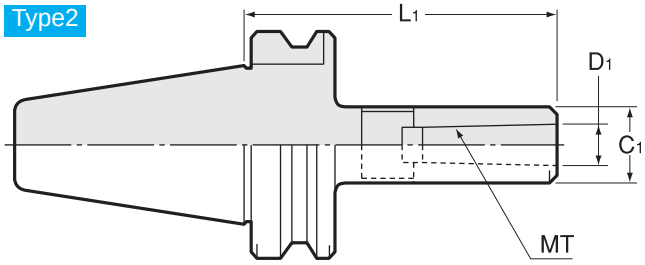

Metric Sizes

Unit : Metric

Code	Model	Type	MT	L1	D1	C1	kg
0760 00101045	**BT30 -MTA1 -45**	1	1	45	12.065	25	0.5
0760 00102060	**BT30 -MTA2 -60**	1	2	60	17.780	32	0.5
0760 00103075	**BT30 -MTA3 -75**	1	3	75	23.825	40	0.7
0760 00301045	**BT40 -MTA1 -45**	1	1	45	12.065	25	1.0
0760 00301120	**-120**	2	1	120	12.065	25	1.3
0760 00302045	**BT40 -MTA2 -45**	1	2	45	17.780	32	1.0
0760 00302120	**-120**	2	2	120	17.780	32	1.4
0760 00303075	**BT40 -MTA3 -75**	1	3	75	23.825	40	1.2
0760 00303135	**-135**	2	3	135	23.825	40	1.8
0760 00304090	**BT40 -MTA4 -90**	1	4	90	31.267	50	1.4
0760 00304165	**-165**	2	4	165	31.267	50	2.4
0760 00501045	**BT50 -MTA1 -45**	1	1	45	12.065	25	3.6
0760 00501120	**-120**	2	1	120	12.065	25	3.8
0760 00501180	**-180**	2	1	180	12.065	25	3.9
0760 00502045	**BT50 -MTA2 -45**	1	2	45	17.780	32	3.6
0760 00502135	**-135**	2	2	135	17.780	32	4.0
0760 00502180	**-180**	2	2	180	17.780	32	4.2
0760 00503045	**BT50 -MTA3 -45**	1	3	45	23.825	40	3.5
0760 00503150	**-150**	2	3	150	23.825	40	4.3
0760 00503180	**-180**	2	3	180	23.825	40	4.5
0760 00504075	**BT50 -MTA4 -75**	1	4	75	31.267	50	3.6
0760 00504180	**-180**	2	4	180	31.267	50	5.0
0760 00505105	**BT50 -MTA5 -105**	1	5	105	44.399	65	3.9
0760 00505210	**-210**	2	5	210	44.399	65	6.3

Ordering Example

BT30 - MTA1 - 45

Shank size | MT1 | Projection length (L)

Inch to Metric (mm) → Inch × 25.4
Metric (mm) to Inch → Metric ÷ 25.4 or Metric × 0.03937

Special / Custom Sizes on request

MTB

Morse Taper Holder

● For Morse taper shank with draw-in screw.

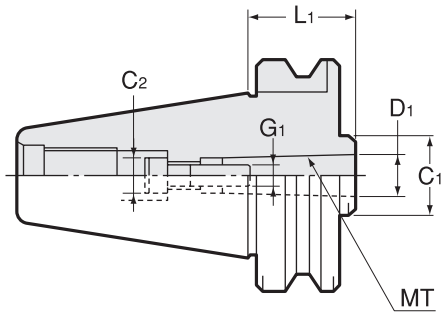

Metric Sizes

Unit : Metric

Code	Model	MT	L1	D1	C1	C2	G1	kg
0760 01101045	**BT30 -MTB1 -45**	1	45	12.065	25	10	M6	0.5
0760 01301045	**BT40 -MTB1 -45**	1	45	12.065	25	10	M6	1.1
0760 01302045	**BT40 -MTB2 -45**	2	45	17.780	32	13	M10	1.0
0760 01501045	**BT50 -MTB1 -45**	1	45	12.065	25	10	M6	3.7
0760 01502045	**BT50 -MTB2 -45**	2	45	17.780	32	16	M10	3.7
0760 01503060	**BT50 -MTB3 -60**	3	60	23.825	40	18	M12	3.7
0760 01504075	**BT50 -MTB4 -75**	4	75	31.267	50	20.5	M16	3.7

Ordering Example

BT30 - **MTB1** - **45**

Shank size | MT1 | Projection length (L)

Inch to Metric (mm) → Inch × 25.4
Metric (mm) to Inch → Metric ÷ 25.4 or Metric × 0.03937

Special / Custom Sizes on request

MEMO

KHE/BT

BT Shank For Stub Holder

● Quick-changeable base holder that acoomodates KH-E type stub holder.



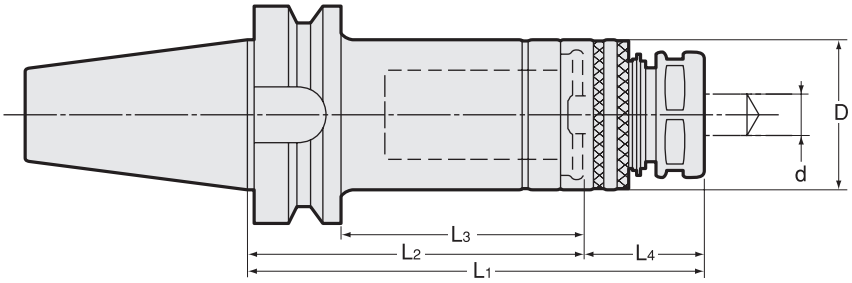

Metric Sizes

Unit : Metric

Code	Model	d	L1	L2	L3	L4	D	kg	Stub holder
2720 10016075	BT30 -KH16E -75 ※	2.5 ~ 9.0	75	40	18	35	32	0.5	KH-16E
2720 10016090	-90	2.5 ~ 9.0	90	55	33	35	32	0.5	
2720 10016105	-105	2.5 ~ 9.0	105	70	48	35	32	0.6	
2720 10019075	BT30 -KH19E -75 ※	2.5 ~ 9.0	75	40	18	35	35	0.4	KH-19E
2720 10019090	-90	2.5 ~ 9.0	90	55	33	35	35	0.5	
2720 10019105	-105	2.5 ~ 9.0	105	70	48	35	35	0.6	
2720 10020075	BT30 -KH20E -75 ※	2.5 ~ 9.0	75	40	18	35	35		KH-20E
2720 10020090	-90	2.5 ~ 9.0	90	55	33	35	35	0.5	
2720 10020105	-105	2.5 ~ 9.0	105	70	48	35	35	0.6	
2720 10022090	BT30 -KH22E -90 ※	2.5 ~ 12.0	90	55	33	35	38	0.5	KH-22E
2720 10022105	-105	2.5 ~ 12.0	105	70	48	35	38	0.6	
2720 10022120	-120	2.5 ~ 12.0	120	85	63	35	38	0.7	
2720 10024090	BT30 -KH24E -90 ※	2.5 ~ 12.0	90	55	33	35	40		KH-24E
2720 10024105	-105	2.5 ~ 12.0	105	70	48	35	40	0.6	
2720 10024120	-120	2.5 ~ 12.0	120	85	63	35	40	0.7	
2720 10025105	BT30 -KH25E -105 ※	3.5 ~ 16.0	105	70	48	35	44	0.7	KH-25E
2720 10025120	-120 ※	3.5 ~ 16.0	120	85	63	35	44		
2720 10026105	BT30 -KH26E -105 ※	3.5 ~ 16.0	105	70	48	35	44	0.7	KH-26E
2720 10026120	-120 ※	3.5 ~ 16.0	120	85	63	35	44	0.8	
2720 30016090	BT40 -KH16E -90	2.5 ~ 9.0	90	55	28	35	32	1.1	KH-16E
2720 30016105	-105	2.5 ~ 9.0	105	70	43	35	32	1.2	
2720 30016135	-135	2.5 ~ 9.0	135	100	73	35	32	1.3	
2720 30019090	BT40 -KH19E -90	2.5 ~ 9.0	90	55	28	35	35	1.1	KH-19E
2720 30019105	-105	2.5 ~ 9.0	105	70	43	35	35	1.2	
2720 30019135	-135	2.5 ~ 9.0	135	100	73	35	35	1.4	
2720 30020090	BT40 -KH20E -90	2.5 ~ 9.0	90	55	28	35	35	1.1	KH-20E
2720 30020105	-105	2.5 ~ 9.0	105	70	43	35	35	1.2	
2720 30020135	-135	2.5 ~ 9.0	135	100	73	35	35	1.4	
2720 30022090	BT40 -KH22E -90	2.5 ~ 12.0	90	55	28	35	38	1.1	KH-22E
2720 30022105	-105	2.5 ~ 12.0	105	70	43	35	38	1.1	
2720 30022135	-135	2.5 ~ 12.0	135	100	73	35	38	1.4	
2720 30024105	BT40 -KH24E -105	2.5 ~ 12.0	105	70	43	35	40	1.2	KH-24E
2720 30024135	-135	2.5 ~ 12.0	135	100	73	35	40	1.4	
2720 30025105	BT40 -KH25E -105	3.5 ~ 16.0	105	70	43	35	44	1.2	KH-25E
2720 30025135	-135	3.5 ~ 16.0	135	100	73	35	44	1.5	
2720 30026105	BT40 -KH26E -105	3.5 ~ 16.0	105	70	43	35	44	1.2	KH-26E
2720 30026135	-135	3.5 ~ 16.0	135	100	73	35	44	1.5	
2720 30028105	BT40 -KH28E -105 ※	3.5 ~ 16.0	105	70	43	35	47	1.2	KH-28E
2720 30028135	-135	3.5 ~ 16.0	135	100	73	35	47	1.5	
2720 30030105	BT40 -KH30E -105 ※	3.5 ~ 16.0	105	70	43	35	47		KH-30E
2720 30030135	-135	3.5 ~ 16.0	135	100	73	35	47	1.4	

Inch to Metric (mm) → Inch × 25.4
Metric (mm) to Inch → Metric ÷ 25.4 or Metric × 0.03937

Special / Custom Sizes on request

Metric Sizes

Unit : Metric

Code	Model	d	L1	L2	L3	L4	D	kg	Stub holder
2720 30032135	BT40 -KH32E -135	3.5 ~ 22.0	135	95	68	40	51	1.4	KH-32E
2720 30032165	-165	3.5 ~ 22.0	165	125	98	40	51	1.8	
2720 30035135	BT40 -KH35E -135 ※	3.5 ~ 22.0	135	95	68	40	55		KH-35E
2720 30035165	-165	3.5 ~ 22.0	165	125	98	40	55		
2720 30036135	BT40 -KH36E -135 ※	3.5 ~ 22.0	135	95	68	40	55	1.5	KH-36E
2720 30036165	-165	3.5 ~ 22.0	165	125	98	40	55	1.9	
2720 50016105	BT50 -KH16E -105	2.5 ~ 9.0	105	70	32	35	32	3.8	KH-16E
2720 50016135	-135	2.5 ~ 9.0	135	100	62	35	32	3.8	
2720 50019105	BT50 -KH19E -105	2.5 ~ 9.0	105	70	32	35	35	3.7	KH-19E
2720 50019135	-135	2.5 ~ 9.0	135	100	62	35	35	3.8	
2720 50020105	BT50 -KH20E -105	2.5 ~ 9.0	105	70	32	35	35		KH-20E
2720 50020135	-135	2.5 ~ 9.0	135	100	62	35	35		
2720 50020165	-165	2.5 ~ 9.0	165	130	92	35	35	4.0	
2720 50022105	BT50 -KH22E -105	2.5 ~ 12.0	105	70	32	35	38	3.7	KH-22E
2720 50022135	-135	2.5 ~ 12.0	135	100	62	35	38	3.9	
2720 50022165	-165	2.5 ~ 12.0	165	130	92	35	38	4.2	
2720 50024105	BT50 -KH24E -105	2.5 ~ 12.0	105	70	32	35	40	3.7	KH-24E
2720 50024135	-135	2.5 ~ 12.0	135	100	62	35	40	3.9	
2720 50024165	-165	2.5 ~ 12.0	165	130	92	35	40	4.1	
2720 50025105	BT50 -KH25E -105	3.5 ~ 16.0	105	70	32	35	44	3.7	KH-25E
2720 50025135	-135	3.5 ~ 16.0	135	100	62	35	44	4.0	
2720 50025165	-165	3.5 ~ 16.0	165	130	92	35	44	4.2	
2720 50026105	BT50 -KH26E -105	3.5 ~ 16.0	105	70	32	35	44	3.7	KH-26E
2720 50026135	-135	3.5 ~ 16.0	135	100	62	35	44	3.9	
2720 50026165	-165	3.5 ~ 16.0	165	130	92	35	44	4.4	
2720 50028105	BT50 -KH28E -105	3.5 ~ 16.0	105	70	32	35	47	3.6	KH-28E
2720 50028135	-135	3.5 ~ 16.0	135	100	62	35	47	4.1	
2720 50028165	-165	3.5 ~ 16.0	165	130	92	35	47	4.5	
2720 50030105	BT50 -KH30E -105	3.5 ~ 16.0	105	70	32	35	47	3.6	KH-30E
2720 50030135	-135	3.5 ~ 16.0	135	100	62	35	47	3.9	
2720 50030165	-165	3.5 ~ 16.0	165	130	92	35	47	4.2	
2720 50032135	BT50 -KH32E -135	3.5 ~ 22.0	135	95	57	40	51	3.8	KH-32E
2720 50032165	-165	3.5 ~ 22.0	165	125	87	40	51	4.4	
2720 50035135	BT50 -KH35E -135	3.5 ~ 22.0	135	95	57	40	55	4.0	KH-35E
2720 50035165	-165	3.5 ~ 22.0	165	125	87	40	55	4.5	
2720 50036135	BT50 -KH36E -135	3.5 ~ 22.0	135	95	57	40	55	3.8	KH-36E
2720 50036165	-165	3.5 ~ 22.0	165	125	87	40	55	4.3	
2720 50048135	BT50 -KH48E -135 ※	20.0 ~ 32.0	135	85	47	50	75		KH-48E
2720 50048165	-165 ※	20.0 ~ 32.0	165	115	77	50	75		

1.Stub holders are sold separately.
2.For center through coolant feed, attach a coolant pin to the holder and use with KH-EC1 or KH-EC2 stub holder.
3.※ marks cannot be used with KH-EC1 and KH-EC2.

Stub holder

KH-E P. 422
KH-EC1 P. 424
KH-EC2 P. 425

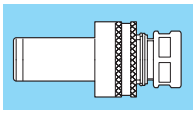

Coolant pin

P. 426

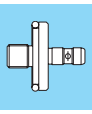

Ordering Example

BT50 - **KH20E** - **105**

Shank size | Stub Holder Size (KH-20E) | Projection length (L)

Inch to Metric (mm) → Inch × 25.4
Metric (mm) to Inch → Metric ÷ 25.4 or Metric × 0.03937

Special / Custom Sizes on request

KLD

Keyless Drill Chuck



BT

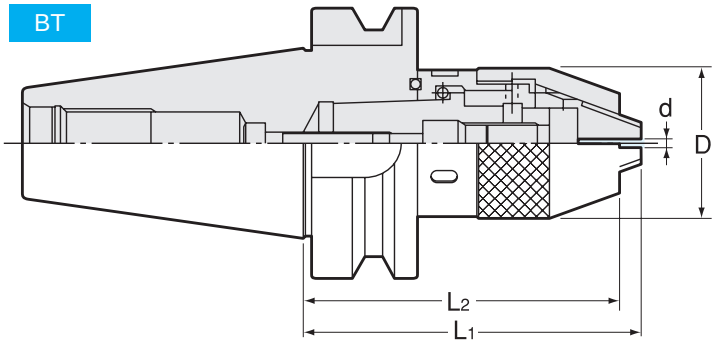

Metric Sizes

Unit : Metric

Code	Model	d	D	L1	L2	kg	Spanner
2680 01065070	BT30 -KLD6.5 -70	0.5 ~ 6.5	34	76	70	1.0	FC6.5LC
2680 01130090	BT30 -KLD13 -90	0.5 ~ 13	50	102	90	1.5	FC13LC
2680 03065075	BT40 -KLD6.5 -75	0.5 ~ 6.5	34	81	75	1.2	FC6.5LC
2680 03065105	-105	0.5 ~ 6.5	34	111	105	1.4	FC6.5LC
2680 03065150	-150	0.5 ~ 6.5	34	156	150	1.6	FC6.5LC
2680 03130095	BT40 -KLD13 -95	0.5 ~ 13	50	107	95	1.7	FC13LC
2680 03130105	-105	0.5 ~ 13	50	117	105	1.9	FC13LC
2680 03130150	-150	0.5 ~ 13	50	162	150	2.5	FC13LC
2680 05065085	BT50 -KLD6.5 -85	0.5 ~ 6.5	34	91	85	3.8	FC6.5LC
2680 05065105	-105	0.5 ~ 6.5	34	111	105	3.9	FC6.5LC
2680 05065150	-150	0.5 ~ 6.5	34	156	150	4.1	FC6.5LC
2680 05130105	BT50 -KLD13 -105	0.5 ~ 13	50	117	105	4.3	FC13LC
2680 05130135	-135	0.5 ~ 13	50	147	135	4.6	FC13LC
2680 05130165	-165	0.5 ~ 13	50	177	165	5.0	FC13LC

ST

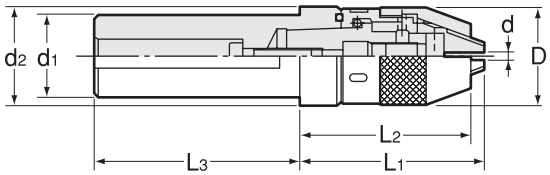

Metric Sizes

Unit : Metric

Code	Model	d	D	d1	d2	L1	L2	L3	kg	Spanner
2684 20065065	ST20 -KLD6.5 -65	0.5 ~ 6.5	34	20	32	84	78	65	0.4	FC6.5LC
2684 25065065	ST25 -KLD6.5 -65	0.5 ~ 6.5	34	25	32	64	58	65	0.5	FC6.5LC
2684 25465065	ST25.4 -KLD6.5 -65	0.5 ~ 6.5	34	25.4	32	64	58	65	0.5	FC6.5LC
2684 32065065	ST32 -KLD6.5 -65	0.5 ~ 6.5	34	32	—	54	48	65	0.7	FC6.5LC
2684 32130065	ST32 -KLD13 -65	0.5 ~ 13	50	32	48	86	74	65	1.2	FC13LC
2684 38065075	ST38.1 -KLD6.5 -75	0.5 ~ 6.5	34	38.1	—	54	48	75	1.0	FC6.5LC
2684 38130075	ST38.1 -KLD13 -75	0.5 ~ 13	50	38.1	48	86	74	75	1.5	FC13LC
2684 40065075	ST40 -KLD6.5 -75	0.5 ~ 6.5	34	40	—	54	48	75	1.0	FC6.5LC
2684 40130075	ST40 -KLD13 -75	0.5 ~ 13	50	40	48	86	74	75	1.5	FC13LC
2684 42065080	ST42 -KLD6.5 -80	0.5 ~ 6.5	34	42	—	54	48	80	1.1	FC6.5LC
2684 42130080	ST42 -KLD13 -80	0.5 ~ 13	50	42	48	86	74	80	1.7	FC13LC
2684 50065085	ST50 -KLD6.5 -85	0.5 ~ 6.5	34	50	—	54	48	85	1.6	FC6.5LC
2684 50130085	ST50 -KLD13 -85	0.5 ~ 13	50	50	—	76	64	85	2.2	FC13LC

Spanner (option)

Model	Code
FC6.5LC	2685 00000065
FC13LC	2685 00000130

Ordering Example

BT40 - KLD13 - 105

BT40: Shank size; KLD13: Max chucking dia.; 105: Projection length (L)

Inch to Metric (mm) → Inch × 25.4
Metric (mm) to Inch → Metric ÷ 25.4 or Metric × 0.03937

Special / Custom Sizes on request

HP-H

High-speed type

30,000min^{-1}

Hyper Spindle (Speed Increaser)

● Enables high speed cutting operation by multiplying the machine spindle speed at the cutting edge. (Max30000min^{-1})

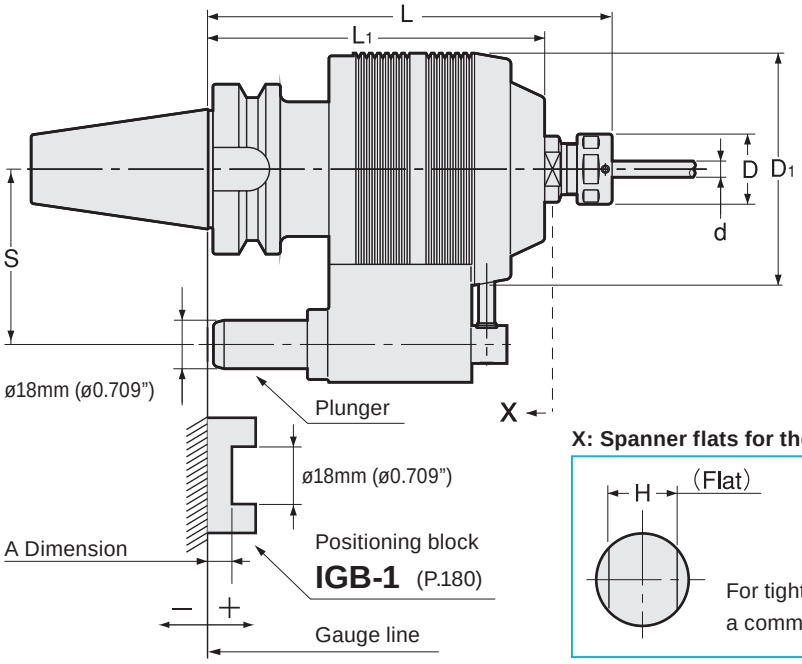



X: Spanner flats for the head shank fixation

For tighten up the nut, please use a commercial spanner.

Unit : Metric

Code	Model	L	S	d	D	D1	L1	Nut	H	Speed boost	MAX min^{-1}	kg
2520 1 ※ 307150	BT40 -HP07H -150 -※	150	65	0.5 ~ 7.0	23	86	125	HDP-07A	16	5	30,000	3.4
2520 1 ※ 307180	-180 -※	180	65	0.5 ~ 7.0	23	86	125	HDP-07A	16	5	30,000	3.5
2520 1 ※ 309150	BT40 -HP09H -150 -※	150	65	2.6 ~ 9.0	26	86	125	HDP-09	21	5	30,000	3.4
2520 1 ※ 309180	-180 -※	180	65	2.6 ~ 9.0	26	86	125	HDP-09	21	5	30,000	3.5
2520 1 ※ 312165	BT40 -HP12H -165 -※	165	65	2.6 ~ 12.0	32	86	125	HDP-12	21	5	30,000	3.5
2520 1 ※ 312180	-180 -※	180	65	2.6 ~ 12.0	32	86	125	HDP-12	21	5	30,000	3.6
2520 1 ※ 507150	BT50 -HP07H -150 -※	150	80	0.5 ~ 7.0	23	86	125	HDP-07A	16	5	30,000	5.9
2520 1 ※ 507180	-180 -※	180	80	0.5 ~ 7.0	23	86	125	HDP-07A	16	5	30,000	6.0
2520 1 ※ 509150	BT50 -HP09H -150 -※	150	80	2.6 ~ 9.0	26	86	125	HDP-09	21	5	30,000	5.9
2520 1 ※ 509180	-180 -※	180	80	2.6 ~ 9.0	26	86	125	HDP-09	21	5	30,000	6.0
2520 1 ※ 512165	BT50 -HP12H -165 -※	165	80	2.6 ~ 12.0	32	86	125	HDP-12	21	5	30,000	6.0
2520 1 ※ 512180	-180 -※	180	80	2.6 ~ 12.0	32	86	125	HDP-12	21	5	30,000	6.0

1.When ordering, please specify the plunger number(No.1~No.5).
2.Plunger is adjustable. Please refer to a chart on the right.
3.Collet and spanner are sold separately.
4.Use AA class collet only.

Plunger table

Model	Plunger No. A				
	No.1	No.2	No.3	No.4	No.5
All Model	+24~+15.1	+15~+6.1	+6~−2.9	−3~−11.9	−12~−20.9

Collet
P. 086 - 089



Spanner
P. 095



Holder	Collet	d	Spanner
HP07H	FDC-07AA	0.5 ~ 7.0	S-0
HP09H	FDC-09AA	2.6 ~ 9.0	S-1L
HP12H	FDC-12AA	2.6 ~ 12.0	S-3L

Ordering Example

BT40 - **HP** **07** **H** - **150** - **1**

BT40: Shank size; 07: Max. collet I.D.; 150: Projection length (L); 1: Plunger No.

Inch to Metric (mm) → Inch × 25.4
Metric (mm) to Inch → Metric ÷ 25.4 or Metric × 0.03937

Special / Custom Sizes on request

AH, AH-OH

90°

Angle Heads (Fixed Type)

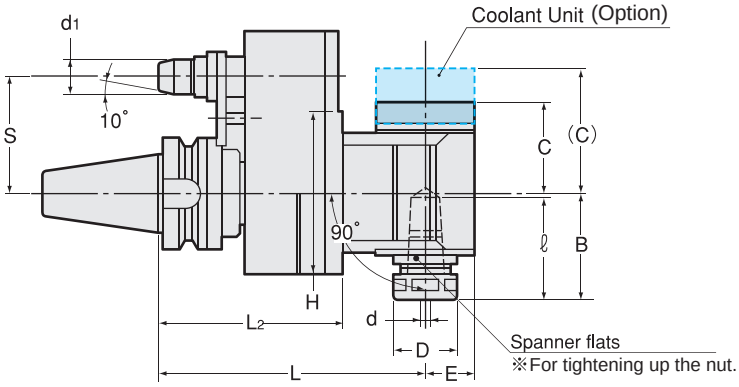

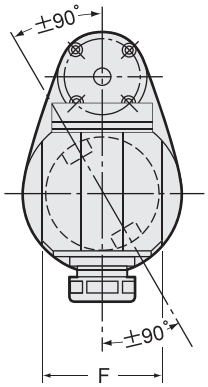



※ Requires a positioning block. Please refer to P.179-180.

Unit : Metric

Code	Model	d	L	L2	ℓ	d1	D	B	C (C)	E	F	H	S	kg
2760 459000 ※※	BT30 -AH0790 -120-50- ※※	0.5 ~ 7.0	120	75.3	40	13	23	42	33	17	45	78	50	1.8
2760 469000 ※※	BT30 -AH1290 -125-50- ※※	2.5 ~ 12.0	125	75.3	63.5	13	32	58	44.5	22	47	78	50	2.0
2760 019000 ※※	BT40 -AH0790 (-AH0790-OH) -150-65- ※※	0.5 ~ 7.0	150	103	40	19.6	23	42	33 (46.5)	17	51	90	65	4.6
2760 029000 ※※	-180-65- ※※	0.5 ~ 7.0	180	103	40	19.6	23	42	33 (46.5)	17	51	90	65	5.0
2760 039000 ※※	-210-65- ※※	0.5 ~ 7.0	210	103	40	19.6	23	42	33 (46.5)	17	51	90	65	5.4
2760 049000 ※※	-240-65- ※※	0.5 ~ 7.0	240	120	40	19.6	23	42	33 (46.5)	17	51	90	65	5.8
2760 059000 ※※	-270-65- ※※	0.5 ~ 7.0	270	120	40	19.6	23	42	33 (46.5)	17	51	90	65	6.0
2760 069000 ※※	BT40 -AH0990 (-AH0990-OH) -150-65- ※※	2.5 ~ 9.0	150	103	55	19.6	26.3	53.5	44.5 (58.5)	22	58	90	65	4.7
2760 079000 ※※	-180-65- ※※	2.5 ~ 9.0	180	103	55	19.6	26.3	53.5	44.5 (58.5)	22	58	90	65	5.1
2760 089000 ※※	-210-65- ※※	2.5 ~ 9.0	210	103	55	19.6	26.3	53.5	44.5 (58.5)	22	58	90	65	5.5
2760 099000 ※※	-240-65- ※※	2.5 ~ 9.0	240	120	55	19.6	26.3	53.5	44.5 (58.5)	22	58	90	65	6.0
2760 109000 ※※	BT40 -AH1690 (-AH1690-OH) -150-65- ※※	3.5 ~ 16.0	150	103	59	19.6	36.3	59	51 (64.5)	28	67	90	65	4.8
2760 119000 ※※	-180-65- ※※	3.5 ~ 16.0	180	103	59	19.6	36.3	59	51 (64.5)	28	67	90	65	5.2
2760 129000 ※※	-210-65- ※※	3.5 ~ 16.0	210	103	59	19.6	36.3	59	51 (64.5)	28	67	90	65	5.6
2760 139000 ※※	BT50 -AH0790 (-AH0790-OH) -165-80- ※※	0.5 ~ 7.0	165	118	40	28	23	42	33 (46.5)	17	51	90	80	7.6
2760 149000 ※※	-195-80- ※※	0.5 ~ 7.0	195	118	40	28	23	42	33 (46.5)	17	51	90	80	8.2
2760 159000 ※※	-225-80- ※※	0.5 ~ 7.0	225	118	40	28	23	42	33 (46.5)	17	51	90	80	8.8
2760 169000 ※※	-255-80- ※※	0.5 ~ 7.0	255	135	40	28	23	42	33 (46.5)	17	51	90	80	9.4
2760 179000 ※※	-285-80- ※※	0.5 ~ 7.0	285	135	40	28	23	42	33 (46.5)	17	51	90	80	10.0
2760 289000 ※※	BT50 -AH0790 (-AH0790-OH) -165-110- ※※	0.5 ~ 7.0	165	118	40	28	23	42	33 (46.5)	17	51	90	110	7.6
2760 299000 ※※	-195-110- ※※	0.5 ~ 7.0	195	118	40	28	23	42	33 (46.5)	17	51	90	110	8.2
2760 309000 ※※	-225-110- ※※	0.5 ~ 7.0	225	118	40	28	23	42	33 (46.5)	17	51	90	110	8.8
2760 319000 ※※	-255-110- ※※	0.5 ~ 7.0	255	135	40	28	23	42	33 (46.5)	17	51	90	110	9.4
2760 329000 ※※	-285-110- ※※	0.5 ~ 7.0	285	135	40	28	23	42	33 (46.5)	17	51	90	110	10.0

Inch to Metric (mm) → Inch × 25.4
Metric (mm) to Inch → Metric ÷ 25.4 or Metric × 0.03937

Special / Custom Sizes on request

Unit : Metric

Code	Model	d	L	L2	ℓ	d1	D	B	C (C)	E	F	H	S	kg
2760 189000 ※※	BT50 -AH0990 (-AH0990-OH) -165-80- ※※	2.5 ~ 9.0	165	118	55	28	26.3	53.5	44.5 (58.5)	22	58	90	80	7.7
2760 199000 ※※	-195-80- ※※	2.5 ~ 9.0	195	118	55	28	26.3	53.5	44.5 (58.5)	22	58	90	80	8.3
2760 209000 ※※	-225-80- ※※	2.5 ~ 9.0	225	118	55	28	26.3	53.5	44.5 (58.5)	22	58	90	80	8.9
2760 219000 ※※	-255-80- ※※	2.5 ~ 9.0	255	135	55	28	26.3	53.5	44.5 (58.5)	22	58	90	80	9.5
2760 339000 ※※	BT50 -AH0990 (-AH0990-OH) -165-110- ※※	2.5 ~ 9.0	165	118	55	28	26.3	53.5	44.5 (58.5)	22	58	90	110	7.7
2760 349000 ※※	-195-110- ※※	2.5 ~ 9.0	195	118	55	28	26.3	53.5	44.5 (58.5)	22	58	90	110	8.3
2760 359000 ※※	-225-110- ※※	2.5 ~ 9.0	225	118	55	28	26.3	53.5	44.5 (58.5)	22	58	90	110	8.9
2760 369000 ※※	-255-110- ※※	2.5 ~ 9.0	255	135	55	28	26.3	53.5	44.5 (58.5)	22	58	90	110	9.5
2760 229000 ※※	BT50 -AH1690 (-AH1690-OH) -165-80- ※※	3.5 ~ 16.0	165	118	59	28	36.3	59	51 (64.5)	28	67	90	80	7.8
2760 239000 ※※	-195-80- ※※	3.5 ~ 16.0	195	118	59	28	36.3	59	51 (64.5)	28	67	90	80	8.4
2760 249000 ※※	-225-80- ※※	3.5 ~ 16.0	225	118	59	28	36.3	59	51 (64.5)	28	67	90	80	9.0
2760 379000 ※※	BT50 -AH1690 (-AH1690-OH) -165-110- ※※	3.5 ~ 16.0	165	118	59	28	36.3	59	51 (64.5)	28	67	90	110	7.8
2760 389000 ※※	-195-110- ※※	3.5 ~ 16.0	195	118	59	28	36.3	59	51 (64.5)	28	67	90	110	8.4
2760 399000 ※※	-225-110- ※※	3.5 ~ 16.0	225	118	59	28	36.3	59	51 (64.5)	28	67	90	110	9.0
2760 259000 ※※	BT50 -AH2290 (-AH2290-OH) -180-80- ※※	3.5 ~ 22.0	180	117	65	28	46.3	69	57 (70.5)	34.5	75	113	80	9.5
2760 269000 ※※	-210-80- ※※	3.5 ~ 22.0	210	117	65	28	46.3	69	57 (70.5)	34.5	75	113	80	10.3
2760 279000 ※※	-240-80- ※※	3.5 ~ 22.0	240	117	65	28	46.3	69	57 (70.5)	34.5	75	113	80	11.0
2760 409000 ※※	BT50 -AH2290 (-AH2290-OH) -180-110- ※※	3.5 ~ 22.0	180	117	65	28	46.3	69	57 (70.5)	34.5	75	113	110	9.5
2760 419000 ※※	-210-110- ※※	3.5 ~ 22.0	210	117	65	28	46.3	69	57 (70.5)	34.5	75	113	110	10.3
2760 429000 ※※	-240-110- ※※	3.5 ~ 22.0	240	117	65	28	46.3	69	57 (70.5)	34.5	75	113	110	11.0
2760 439000 ※※	BT50 -AH2590 (-AH2590-OH) -195-80- ※※	9.5 ~ 25.0	195	117	101	28	65	90	73 (86.5)	45	90	113	80	15.0
2760 449000 ※※	-195-110- ※※	9.5 ~ 25.0	195	117	101	28	65	90	73 (86.5)	45	90	113	110	15.0

Model names in brackets show "Coolant type", which are quoted on request.

1. ※ is for A dimension. Please refer to P. 179.
2. When ordering, please specify plunger size ("A" dimension).
3. Plunger is fixed (non-adjustable)
4. Collet and spanner are sold separately.
5. BT30-AH1290-125-50- ※※ is light cutting only.

Accessories for Angle heads fixed type

Model	Nut	Collet	Spanner for nut	Spanner flats for the head
AH0790	HDP-07A	FDC-07A	S-0	Standard 14mm spanner
AH0990	HDP-09	FDC-09	S-1L	S-1L
AH1290	HDP-12	FDC-12	S-3L	S-3L
AH1690	HDP-16	FDC-16	S-4L	S-4L
AH2290	HDP-22	FDC-22	S-5L	S-5L
AH2590	HPP-25	NTG25	HS2.5-25	HS2.5-25

Collet

P. 086 - 089



Spanner

P. 095



Ordering Example

BT40 - AH 07 90 - 150 - 65 - 06

Shank size	Max. collet I.D.	Angle	Projection length (L)	S	Dimension A

Inch to Metric (mm) → Inch × 25.4
Metric (mm) to Inch → Metric ÷ 25.4 or Metric × 0.03937

Special / Custom Sizes on request

AH, AH-OH

45°

Angle Heads (Fixed Type)

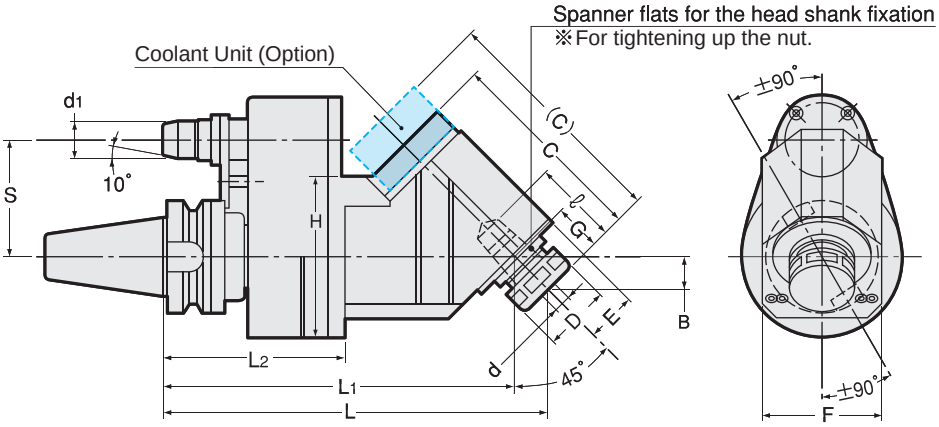



※ Requires a positioning block. Please refer to P.179-180.

Unit : Metric

Code	Model			d	L	L1	L2	ℓ	d1	D	B	C (C)	E	F	G	H	S	kg
2760 014500 ※※	BT40	-AH0745 (-AH0745-OH)	-195-65- ※※	0.5 ~ 7.0	195	179.5	103	35	19.6	23	15.6	88.5 (102)	17	51	22	90	65	4.2
2760 024500 ※※			-215-65- ※※	0.5 ~ 7.0	215	199.5	103	35	19.6	23	15.6	88.5 (102)	17	51	22	90	65	
2760 034500 ※※			-245-65- ※※	0.5 ~ 7.0	245	229.5	103	35	19.6	23	15.6	88.5 (102)	17	51	22	90	65	
2760 044500 ※※	BT40	-AH0945 (-AH0945-OH)	-205-65- ※※	2.5 ~ 9.0	205	186.5	103	45	19.6	26.3	19.1	104 (118)	22	58	27	90	65	4.5
2760 054500 ※※			-230-65- ※※	2.5 ~ 9.0	230	211.5	103	45	19.6	26.3	19.1	104 (118)	22	58	27	90	65	
2760 064500 ※※			-260-65- ※※	2.5 ~ 9.0	260	241.5	103	45	19.6	26.3	19.1	104 (118)	22	58	27	90	65	
2760 074500 ※※	BT40	-AH1645 (-AH1645-OH)	-215-65- ※※	3.5 ~ 16.0	215	197	103	53	19.6	36.3	18.4	113.5 (127)	28	67	26	90	65	5.3
2760 084500 ※※			-245-65- ※※	3.5 ~ 16.0	245	227	103	53	19.6	36.3	18.4	113.5 (127)	28	67	26	90	65	
2760 094500 ※※	BT50	-AH0745 (-AH0745-OH)	-210-80- ※※	0.5 ~ 7.0	210	194.5	118	35	28	23	15.6	88.5 (102)	17	51	22	90	80	7.8
2760 104500 ※※			-230-80- ※※	0.5 ~ 7.0	230	214.5	118	35	28	23	15.6	88.5 (102)	17	51	22	90	80	
2760 114500 ※※			-260-80- ※※	0.5 ~ 7.0	260	244.5	118	35	28	23	15.6	88.5 (102)	17	51	22	90	80	
2760 174500 ※※	BT50	-AH0745 (-AH0745-OH)	-210-110- ※※	0.5 ~ 7.0	210	194.5	118	35	28	23	15.6	88.5 (102)	17	51	22	90	110	
2760 184500 ※※			-230-110- ※※	0.5 ~ 7.0	230	214.5	118	35	28	23	15.6	88.5 (102)	17	51	22	90	110	
2760 194500 ※※			-260-110- ※※	0.5 ~ 7.0	260	244.5	118	35	28	23	15.6	88.5 (102)	17	51	22	90	110	
2760 124500 ※※	BT50	-AH0945 (-AH0945-OH)	-220-80- ※※	2.5 ~ 9.0	220	201.5	118	45	28	26.3	19.1	104 (118)	22	58	27	90	80	7.8
2760 134500 ※※			-245-80- ※※	2.5 ~ 9.0	245	226.5	118	45	28	26.3	19.1	104 (118)	22	58	27	90	80	
2760 144500 ※※			-275-80- ※※	2.5 ~ 9.0	275	256.5	118	45	28	26.3	19.1	104 (118)	22	58	27	90	80	
2760 204500 ※※	BT50	-AH0945 (-AH0945-OH)	-220-110- ※※	2.5 ~ 9.0	220	201.5	118	45	28	26.3	19.1	104 (118)	22	58	27	90	110	
2760 214500 ※※			-245-110- ※※	2.5 ~ 9.0	245	226.5	118	45	28	26.3	19.1	104 (118)	22	58	27	90	110	
2760 224500 ※※			-275-110- ※※	2.5 ~ 9.0	275	256.5	118	45	28	26.3	19.1	104 (118)	22	58	27	90	110	
2760 154500 ※※	BT50	-AH1645 (AH1645-OH)	-230-80- ※※	3.5 ~ 16.0	230	212	118	53	28	36.3	18.4	113.5 (127)	28	67	26	90	80	
2760 164500 ※※			-260-80- ※※	3.5 ~ 16.0	260	242	118	53	28	36.3	18.4	113.5 (127)	28	67	26	90	80	
2760 234500 ※※	BT50	-AH1645 (AH1645-OH)	-230-110- ※※	3.5 ~ 16.0	230	212	118	53	28	36.3	18.4	113.5 (127)	28	67	26	90	110	
2760 244500 ※※			-260-110- ※※	3.5 ~ 16.0	260	242	118	53	28	36.3	18.4	113.5 (127)	28	67	26	90	110	

Inch to Metric (mm) → Inch × 25.4
Metric (mm) to Inch → Metric ÷ 25.4 or Metric × 0.03937

Special / Custom Sizes on request

Model names in brackets show "Coolant type", which are quoted on request.

1. ※ is for A dimension. Please refer to P. 179.
2. When ordering, please specify plunger size ("A" dimension).
3. Plunger is fixed (non-adjustable)
4. Collet and spanner are sold separately.

Accessories for Angle heads fixed type

Model	Nut	Collet	Spanner for nut	Spanner flats for the head
AH0745	HDP-07A	FDC-07A	S-0	Standard 14mm spanner
AH0945	HDP-09	FDC-09	S-1L	S-1L
AH1645	HDP-16	FDC-16	S-4L	S-4L

Collet

P. 086 - 089



Spanner

P. 095



Ordering Example

BT40	-	AH	07	45	-	195	-	65	-	06
Shank size			Max. collet I.D.	Angle		Projection length (L)		S		Dimension A

AHS, AHL

0-90°

Angle Heads (Flexible Type)

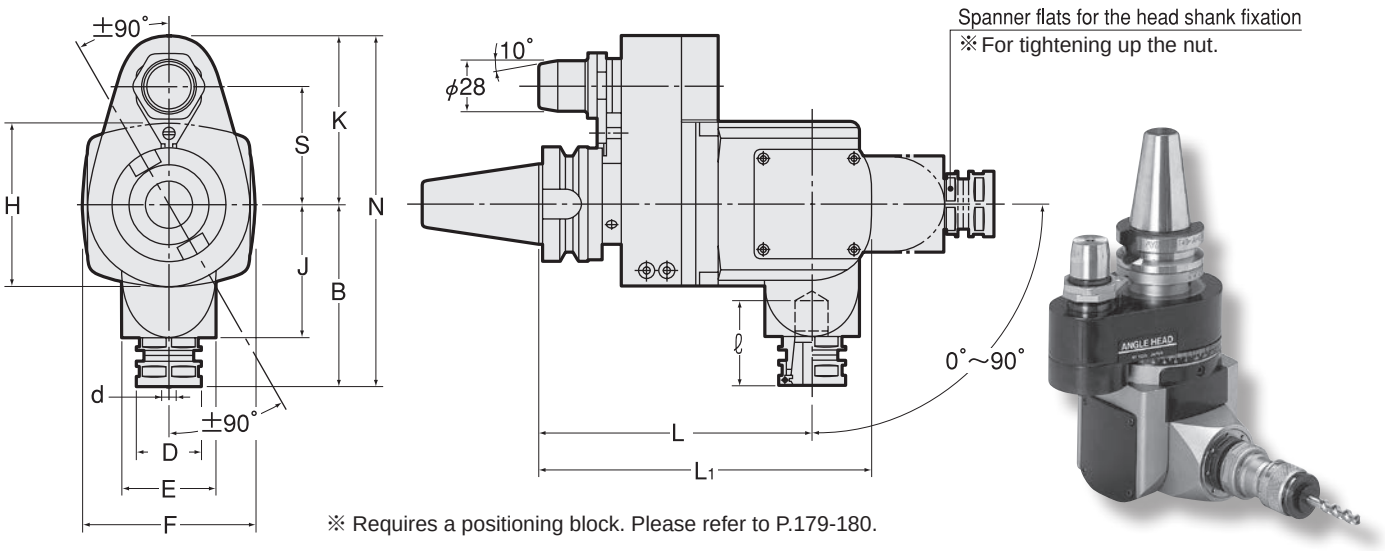

※ Requires a positioning block. Please refer to P.179-180.

Unit : Metric

Code	Model	d	L	L1	ℓ	D	B	E	F	H	J	K	N	S	kg	Collet
2640 010000 ※※	**BT40 -AHS07 -150-65-** ※※	0.5 ~ 7.0	150	183	65	23	100	52	96	90	73	93	193	65	8.0	FDC-07
2640 020000 ※※	**BT40 -AHS09 -150-65-** ※※	2.5 ~ 9.0	150	183	65	26	100	52	96	90	73	93	193	65	8.0	FDC-09
2640 030000 ※※	**BT40 -AHS16 -150-65-** ※※	3.5 ~ 16.0	150	183	47	36	100	52	96	90	73	93	193	65	8.0	FDC-16
2640 040000 ※※	**BT50 -AHS07 -165-80-** ※※	0.5 ~ 7.0	165	198	65	23	100	52	96	90	73	108	208	80	12.0	FDC-07
2640 050000 ※※	**BT50 -AHS09 -165-80-** ※※	2.5 ~ 9.0	165	198	65	26	100	52	96	90	73	108	208	80	12.0	FDC-09
2640 060000 ※※	**BT50 -AHS16 -165-80-** ※※	3.5 ~ 16.0	165	198	47	36	100	52	96	90	73	108	208	80	12.0	FDC-16
2640 070000 ※※	**BT50 -AHS07 -165-110-** ※※	0.5 ~ 7.0	165	198	65	23	100	52	96	90	73	138	238	110	12.0	FDC-07
2640 080000 ※※	**BT50 -AHS09 -165-110-** ※※	2.5 ~ 9.0	165	198	65	26	100	52	96	90	73	138	238	110	12.0	FDC-09
2640 090000 ※※	**BT50 -AHS16 -165-110-** ※※	3.5 ~ 16.0	165	198	47	36	100	52	96	90	73	138	238	110	12.0	FDC-16
2640 100000 ※※	**BT50 -AHL16 -165-80-** ※※	3.5 ~ 16.0	165	205	70	36	110	66	118	110	78	108	218	80	15.0	FDC-16
2640 110000 ※※	**BT50 -AHL22 -165-80-** ※※	3.5 ~ 22.0	165	205	65	46	110	66	118	110	78	108	218	80	15.0	FDC-22
2640 120000 ※※	**BT50 -AHL16 -165-110-** ※※	3.5 ~ 16.0	165	205	70	36	110	66	118	110	78	138	248	110	15.0	FDC-16
2640 130000 ※※	**BT50 -AHL22 -165-110-** ※※	3.5 ~ 22.0	165	205	65	46	110	66	118	110	78	138	248	110	15.0	FDC-22

1.※ is for A dimension. Please refer to P. 179.
2.When ordering, please specify plunger size (“A” dimension)
3.Plunger is fixed (non-adjustable)
4.Collet and spanner are sold separately.

Ordering Example

BT40 - AHS 07 - 150 - 65 - 06

- BT40: Shank size
- 07: Max. collet I.D.
- 150: Projection length (L)
- 65: S
- 06: Dimension A

Collet
P. 086 - 089
Spanner
P. 095

Accessories for Angle heads flexibled type

Model	Nut	Collet	Spanner for nut	Spanner flats for the head
AHS07	HDP-07A	FDC-07	S-0	Standard 16mm spanner
AHS09	HDP-09	FDC-09	S-1L	Standard 21mm spanner
AHS16	HDP-16	FDC-16	S-4L	S-4L
AHL16	HDP-16	FDC-16	S-4L	S-3L
AHL22	HDP-22	FDC-22	S-5L	S-5L

Inch to Metric (mm) → Inch × 25.4
Metric (mm) to Inch → Metric ÷ 25.4 or Metric × 0.03937

Special / Custom Sizes on request

Accessories for ANGLE HEADS

MASTER BAR MS

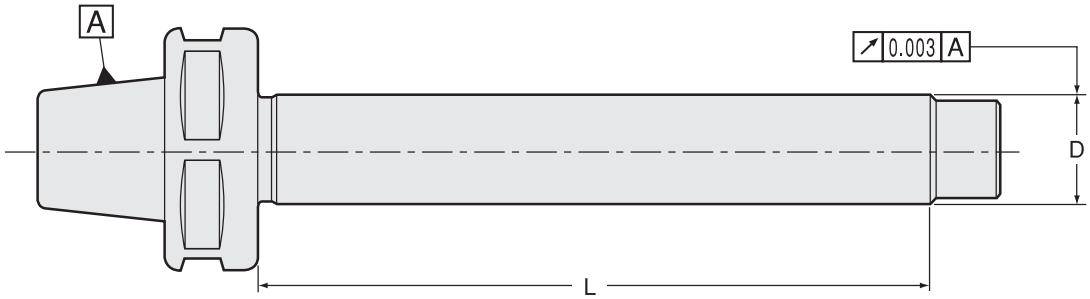

Metric Sizes

Unit : Metric

Code	Model	D	L	Applicable Angle Head model Number
2767 00007100	**AH07-MS7-100**	7	100	AH0790、AH0745、AHS07
2767 00009100	**AH09-MS16-100**	16	100	AH0990、AH0945、AHS09
2767 00016100	**AH16-MS16-100**	16	100	AH1690、AH1645、AHS16、AHL16
2767 00022100	**AH22-MS22-100**	22	100	AH2290、AHL22
2767 00025110	**AH25-MS25-110**	25	110	AH2590

1.Angle Head comes complete with a set of Master bar. Please order an extra Master bar in case you need one.
2.With regard to AH07-MS7-100, nut and Master bar are separated. Master bar and nut must be put together before use.
(As for other sizes, Master bar and cap nut are already integrated.)

Ordering Example

AH09 - MS16 - 100
Collet size D L

Quick-change tapping attachment TPC

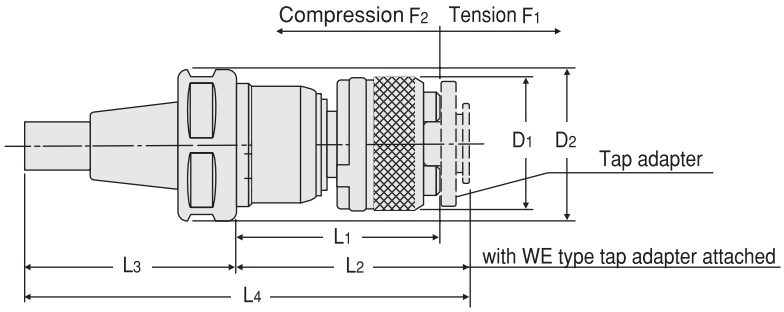

Ordering Example

TPC22 - 1
Tap adapter size

Metric Sizes

Unit : Metric

Type	Tap adapter size	Tap size (Please refer to P.463-464.)	L1	L2	L3	L4	D1	D2	Axial compensation		Applicable Angle Head model Number
									F1	F2	
TPC16-1	**1**	M3 ～ M12 (M15) U1/4 ～ U7/16 (U9/16) Pipe (PT,PS,PF) 1/8 ～ 1/4	49.5	56.5	64.5	121	32	36	10	2	AH1645、AH1690、AHS16、AHL16
TPC22-1	**1**	M3 ～ M12 (M15) U1/4 ～ U7/16 (U9/16) Pipe (PT,PS,PF) 1/8 ～ 1/4	49.5	56.5	70	126.5	32	46	10	2	AH2290、AHL22
TPC22-2	**2**	M8 ～ M22 U3/8 ～ U7/8	69	80	70	150	50	46	10	2	AH2290、AHL22

Inch to Metric (mm) → Inch × 25.4
Metric (mm) to Inch → Metric ÷ 25.4 or Metric × 0.03937

Special / Custom Sizes on request

HDC·A-CS

Collet Holder (Coolant Inducer)

Type1

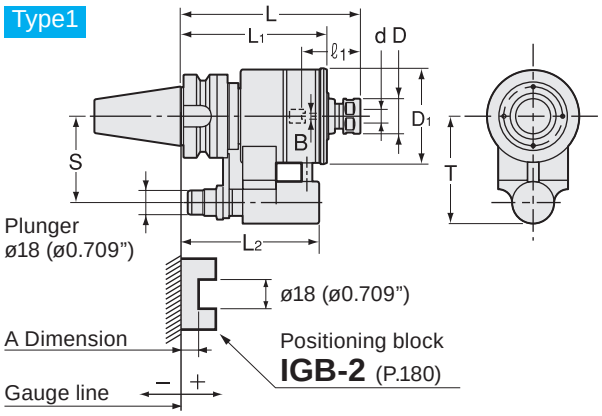

Type2

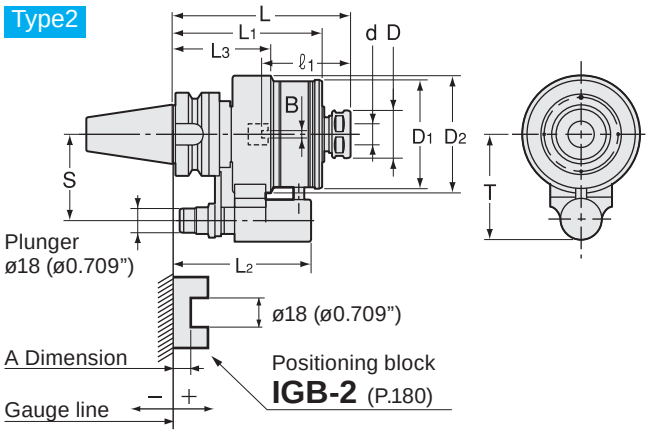

Unit : Metric

Code	Model	Type	d	L	B	ℓ1	L1	L2	L3	D	D1	D2	T	S	MAX min^{-1}	Max. Coolant	Seal unit	kg
2980 8307135 ※	BT40 -HDC07A -135CS- ※	1	3.0 ~ 7	135	0 ~ 4	22 ~ 48	110	105	—	23	71	—	81	65	8,000	2MPa	CS-1	3.6
2980 8307165 ※	-165CS- ※	1	3.0 ~ 7	165	0 ~ 4	22 ~ 48	110	105	—	23	71	—	81	65	8,000	2MPa	CS-1	3.7
2980 8309135 ※	BT40 -HDC09A -135CS- ※	1	3.0 ~ 9	135	0 ~ 4	27 ~ 48	110	105	—	26	71	—	81	65	8,000	2MPa	CS-1	3.6
2980 8309165 ※	-165CS- ※	1	3.0 ~ 9	165	0 ~ 4	27 ~ 48	110	105	—	26	71	—	81	65	8,000	2MPa	CS-1	3.7
2980 8312135 ※	BT40 -HDC12A -135CS- ※	1	3.0 ~ 12	135	0 ~ 5	33 ~ 46	110	105	—	32	71	—	81	65	8,000	2MPa	CS-1	3.6
2980 8312165 ※	-165CS- ※	1	3.0 ~ 12	165	0 ~ 5	33 ~ 46	110	105	—	32	71	—	81	65	8,000	2MPa	CS-1	3.8
2980 8316135 ※	BT40 -HDC16A -135CS- ※	2	6.0 ~ 16	135	0 ~ 6	38 ~ 66	114	105	75	36	82	89	81	65	6,000	2MPa	CS-2	4.5
2980 8316165 ※	-165CS- ※	2	6.0 ~ 16	165	0 ~ 6	38 ~ 66	114	105	75	36	82	89	81	65	6,000	2MPa	CS-2	4.7
2980 8322150 ※	BT40 -HDC22A -150CS- ※	1	6.0 ~ 22	150	0 ~ 8	47 ~ 103	114	105	—	46	90	—	81	65	5,000	2MPa	CS-3	4.7
2980 8322180 ※	-180CS- ※	1	6.0 ~ 22	180	0 ~ 8	47 ~ 103	114	105	—	46	90	—	81	65	5,000	2MPa	CS-3	5.1
2980 8507150 ※	BT50 -HDC07A -150CS- ※	1	3.0 ~ 7	150	0 ~ 4	22 ~ 48	119	114	—	23	71	—	96	80	8,000	2MPa	CS-1	6.1
2980 8507180 ※	-180CS- ※	1	3.0 ~ 7	180	0 ~ 4	22 ~ 48	119	114	—	23	71	—	96	80	8,000	2MPa	CS-1	6.3
2980 8509150 ※	BT50 -HDC09A -150CS- ※	1	3.0 ~ 9	150	0 ~ 4	27 ~ 48	119	114	—	26	71	—	96	80	8,000	2MPa	CS-1	6.1
2980 8509180 ※	-180CS- ※	1	3.0 ~ 9	180	0 ~ 4	27 ~ 48	119	114	—	26	71	—	96	80	8,000	2MPa	CS-1	6.3
2980 8512150 ※	BT50 -HDC12A -150CS- ※	1	3.0 ~ 12	150	0 ~ 5	33 ~ 46	119	114	—	32	71	—	96	80	8,000	2MPa	CS-1	6.9
2980 8512180 ※	-180CS- ※	1	3.0 ~ 12	180	0 ~ 5	33 ~ 46	119	114	—	32	71	—	96	80	8,000	2MPa	CS-1	7.0
2980 8516150 ※	BT50 -HDC16A -150CS- ※	2	6.0 ~ 16	150	0 ~ 6	38 ~ 66	123	114	84	36	82	89	96	80	6,000	2MPa	CS-2	7.7
2980 8516180 ※	-180CS- ※	2	6.0 ~ 16	180	0 ~ 6	38 ~ 66	123	114	84	36	82	89	96	80	6,000	2MPa	CS-2	8.0
2980 8522150 ※	BT50 -HDC22A -150CS- ※	1	6.0 ~ 22	150	0 ~ 8	47 ~ 103	123	114	—	46	90	—	96	80	5,000	2MPa	CS-3	7.8
2980 8522180 ※	-180CS- ※	1	6.0 ~ 22	180	0 ~ 8	47 ~ 103	123	114	—	46	90	—	96	80	5,000	2MPa	CS-3	8.2

1. Coolant collet and spanner are sold separately.
2. When ordering, please specify the plunger number(No.1~No.5).
3. Plunger is adjustable. Please refer to a chart on the right.
4. Refer to P. 092 for minimum tool insertion length in case of using our coolant collets (OH,C).
5. ℓ1dimensions in brackets are for using preset screw.
6. Seal unit can be replaced by customer.

Plunger table

Model	Plunger No. A				
	No.1	No.2	No.3	No.4	No.5
BT40	+20 ~ +10.1	+10 ~ + 0.1	0 ~ - 9.9	-10 ~ -19.9	-20 ~ -29.9
BT50	+28 ~ +18.1	+18 ~ + 8.1	+ 8 ~ - 1.9	- 2 ~ -11.9	-12 ~ -21.9

Ordering Example

BT40 - HDC 07 A - 135 CS - 1

- BT40: Shank size
- 07: Max. collet I.D.
- 135: Projection length (L)
- 1: Plunger No.

Seal unit	Collet	Spanner
P. 178	P. 087-088	P. 095

Accessories

Model	Nut	Collet	Spanner
HDC07	HDP-07A	FDC-07 (OH or C)	S-0
HDC09	HDP-09	FDC-09 (OH or C)	S-1L
HDC12	HDP-12	FDC-12 (OH or C)	S-3L
HDC16	HDP-16	FDC-16 (OH or C)	S-4L
HDC22	HDP-22	FDC-22 (OH or C)	S-5L

Inch to Metric (mm) → Inch × 25.4
Metric (mm) to Inch → Metric ÷ 25.4 or Metric × 0.03937

Special / Custom Sizes on request

CT·S-CS

Super Tite-Lock Milling Chuck (Coolant Inducer)

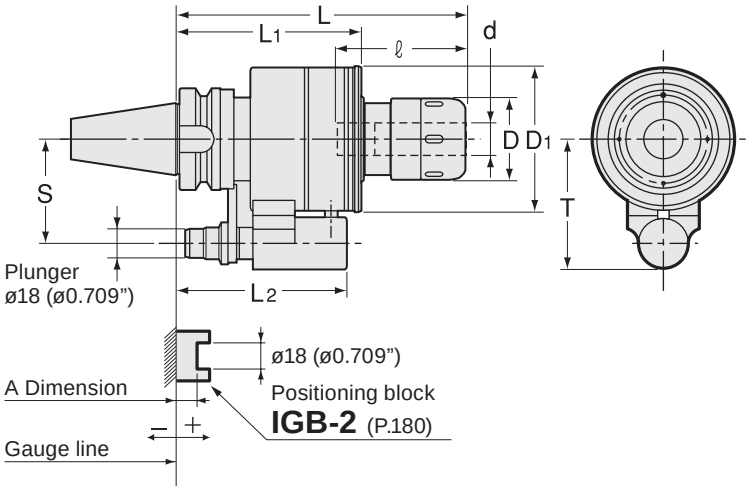

Metric Sizes

Unit : Metric

Code	Model	d	L	ℓ	L1	L2	D	D1	T	S	MAX min-1	Max. Coolant	Seal unit	Spanner
2980 7316165 ※	BT40 -CT16S -165CS- ※	16	165	60	114	105	45	90	81	65	5,000	2MPa	CS-3	HS-1-16
2980 7320180 ※	BT40 -CT20S -180CS- ※	20	180	70	114	105	52	90	81	65	5,000	2MPa	CS-3	HS-2-20
2980 7325195 ※	BT40 -CT25S -195CS- ※	25	195	75	128	117	61	100	81	65	4,000	2MPa	CS-4	HS-2.5-25
2980 7332195 ※	BT40 -CT32S -195CS- ※	32	195	80	128	117	73	100	81	65	4,000	2MPa	CS-4	HS-3-32
2980 7516180 ※	BT50 -CT16S -180CS- ※	16	180	60	123	114	45	90	96	80	5,000	2MPa	CS-3	HS-1-16
2980 7520180 ※	BT50 -CT20S -180CS- ※	20	180	70	123	114	52	90	96	80	5,000	2MPa	CS-3	HS-2-20
2980 7525195 ※	BT50 -CT25S -195CS- ※	25	195	75	125	114	61	100	96	80	4,000	2MPa	CS-4	HS-2.5-25
2980 7532195 ※	BT50 -CT32S -195CS- ※	32	195	80	125	114	73	100	96	80	4,000	2MPa	CS-4	HS-3-32

1. When ordering, please specify the plunger number(No.1~No.5).
2. Plunger is adjustable. Please refer to a chart on the right.
3. Please return your coolant holder to us through your dealer for seal unit replacement.
4. When ordering, indicate number of spanners required. “No charge” spanners are limited to number of milling chucks on order.
5. Accessories cannot be used except for MC-C and MC-OH.
6. Tolerance of cutting tool shank must be h7.

Ordering Example

BT50 - CT 32 S - 195 CS - 1

Shank size | I.D. (d) | Projection length (L) | Plunger No.

Plunger table

Model	Plunger No. A				
	No.1	No.2	No.3	No.4	No.5
BT40-CT16S	+20 ~ +10.1	+10 ~ +0.1	0 ~ -9.9	-10 ~ -19.9	-20 ~ -29.9
BT40-CT20S	+20 ~ +10.1	+10 ~ +0.1	0 ~ -9.9	-10 ~ -19.9	-20 ~ -29.9
BT40-CT25S	+33 ~ +23.1	+23 ~ +13.1	+13 ~ +3.1	+3 ~ -6.9	-7 ~ -16.9
BT40-CT32S	+33 ~ +23.1	+23 ~ +13.1	+13 ~ +3.1	+3 ~ -6.9	-7 ~ -16.9
BT50	+28 ~ +18.1	+18 ~ +8.1	+8 ~ -1.9	-2 ~ -11.9	-12 ~ -21.9

MC-OH.MC-C Collet	Seal unit	Spanner
P. 66-67	P. 178	P. 069

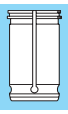
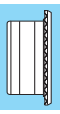


Min. chucking length

Without coolant collet（MC-C, MC-OH）

I.D.of Milling Chuck	Min. chucking length
16、20	40
25、32	50

With coolant collet（MC-C, MC-OH）

Collet I.D.	Min. chucking length
6、8	30
10、12	40
16、20	45
25	50

Inch to Metric (mm) → Inch × 25.4
Metric (mm) to Inch → Metric ÷ 25.4 or Metric × 0.03937

Special / Custom Sizes on request

CT·A-CS

Tite-Lock Milling Chuck (Coolant Inducer)

Type1

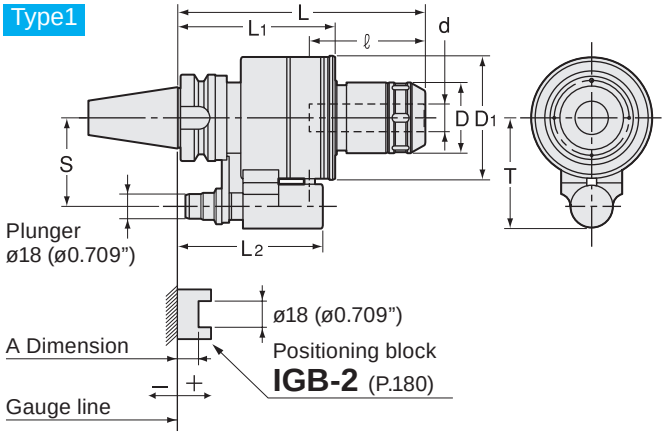

Type2

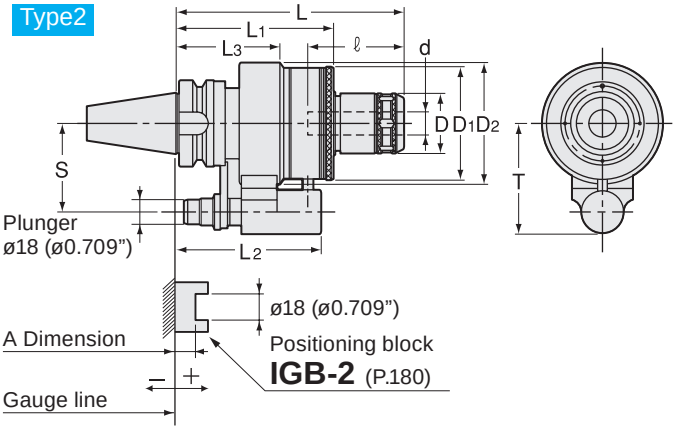

Metric Sizes

Unit : Metric

Code	Model	Type	d	L	ℓ	L1	L2	L3	D	D1	D2	T	S	MAX min-1	Max. Coolant	kg	Spanner
2980 2316165 ※	BT40 -CT16A -165CS- ※	2	16	165	60	114	105	75	45	82	89	81	65	6,000	2MPa	4.9	HS-1-16
2980 2320180 ※	BT40 -CT20A -180CS- ※	1	20	180	70	114	105	—	52	90	—	81	65	5,000	2MPa	5.5	HS-2-20
2980 2325180 ※	BT40 -CT25A -180CS- ※	1	25	180	75	114	105	—	61	90	—	81	65	5,000	2MPa	5.7	HS-2.5-25
2980 2332195 ※	BT40 -CT32A -195CS- ※	1	32	195	80	128	117	—	73	100	—	81	65	4,000	2MPa	7.3	HS-3-32
2980 2516180 ※	BT50 -CT16A -180CS- ※	2	16	180	60	123	114	84	45	82	89	96	80	6,000	2MPa	7.7	HS-1-16
2980 2520195 ※	BT50 -CT20A -195CS- ※	1	20	195	70	123	114	—	52	90	—	96	80	5,000	2MPa	8.8	HS-2-20
2980 2525195 ※	BT50 -CT25A -195CS- ※	1	25	195	80	123	114	—	61	90	—	96	80	5,000	2MPa	9.5	HS-2.5-25
2980 2532195 ※	BT50 -CT32A -195CS- ※	1	32	195	80	125	114	—	73	100	—	96	80	4,000	2MPa	10.2	HS-3-32

1. When ordering, please specify the plunger number(No.1~No.5).
2. Plunger is adjustable. Please refer to a chart on the right.
3. Please return your coolant holder to us through your dealer for seal unit replacement.
4. When ordering, indicate number of spanners required. "No charge" spanners are limited to number of milling chucks on order.
5. Accessories cannot be used except for MC-C and MC-OH.
6. Tolerance of cutting tool shank must be h7.

Plunger table

Model	Plunger No. A				
	No.1	No.2	No.3	No.4	No.5
BT40-CT16A	+20 ~ +10.1	+10 ~ +0.1	0 ~ -9.9	-10 ~ -19.9	-20 ~ -29.9
BT40-CT20A	+20 ~ +10.1	+10 ~ +0.1	0 ~ -9.9	-10 ~ -19.9	-20 ~ -29.9
BT40-CT25A	+20 ~ +10.1	+10 ~ +0.1	0 ~ -9.9	-10 ~ -19.9	-20 ~ -29.9
BT40-CT32A	+33 ~ +23.1	+23 ~ +13.1	+13 ~ +3.1	+3 ~ -6.9	-7 ~ -16.9
BT50	+28 ~ +18.1	+18 ~ +8.1	+8 ~ -1.9	-2 ~ -11.9	-12 ~ -21.9

Ordering Example

BT50 - CT 32 A - 195 CS - 1

- BT50: Shank size
- 32: I.D. (d)
- 195: Projection length (L)
- 1: Plunger No.

Min. chucking length

Without coolant collet (MC-C, MC-OH)

I.D.of Milling Chuck	Min. chucking length
16	40
20、25	45
32	60

With coolant collet (MC-C, MC-OH)

Collet I.D.	Min. chucking length
6、8	30
10、12	40
16、20	45
25	55

MC-OH.MC-C Collet
P. 66-67

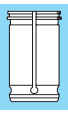

Spanner
P. 069



Inch to Metric (mm) → Inch × 25.4
Metric (mm) to Inch → Metric ÷ 25.4 or Metric × 0.03937

Special / Custom Sizes on request

HC-CS

Hydraulic Chuck (Coolant Inducer)



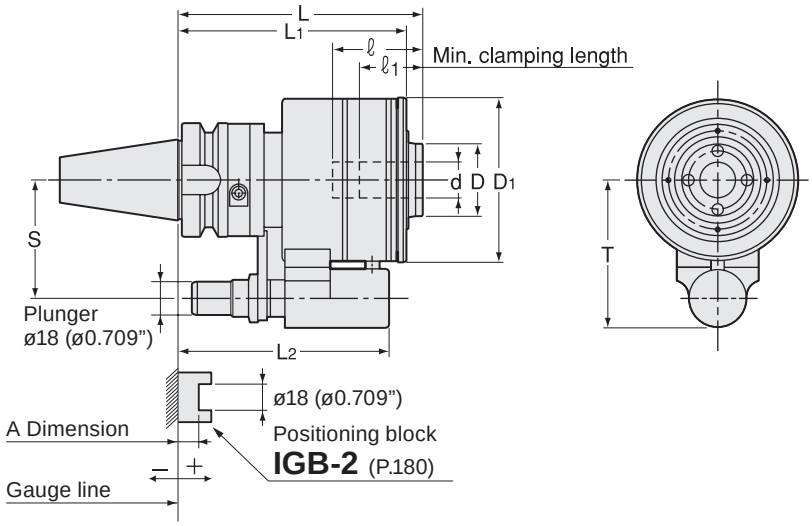

Metric Sizes

Unit : Metric

Code	Model	d	L	L1	L2	D	D1	ℓ	ℓ1	T	S	MAX min-1	Max. Coolant	Seal unit	kg	Hex. Wrench (Option)
2980 3316135 ※	**BT40 -HC16 -135CS-** ※	16	135	126	117	41	90	50	40	81	65	5,000	2MPa	CS-3	5.0	L-4T
2980 3320135 ※	**BT40 -HC20 -135CS-** ※	20	135	126	117	45	90	50	40	81	65	5,000	2MPa	CS-3	5.0	
2980 3325135 ※	**BT40 -HC25 -135CS-** ※	25	135	130	118	50	100	60	50	81	65	4,000	2MPa	CS-4	5.7	L-6T
2980 3516150 ※	**BT50 -HC16 -150CS-** ※	16	150	135	126	42	90	50	40	96	80	5,000	2MPa	CS-3	8.1	L-4T
2980 3520150 ※	**BT50 -HC20 -150CS-** ※	20	150	135	126	46	90	50	40	96	80	5,000	2MPa	CS-3	8.8	
2980 3525150 ※	**BT50 -HC25 -150CS-** ※	25	150	139	128	52	100	60	50	96	80	4,000	2MPa	CS-4	9.4	L-6T

1. When ordering, please specify the plunger number(No.1~No.5).
2. Plunger is adjustable. Please refer to a chart on the right.
3. Please use cutting tool with smaller tolerance than h7. Tolerance within $^{0}_{-0.01}$ is recommended in case newly making cutting tools.
4. Never operate clamp bolt without cutting tool in the chuck, othewise the chuck will be damaged.
5. Seal unit can be replaced by customer.

Ordering Example

BT40 - HC 16 S - 135 CS - 1

BT40: Shank size; 16: I.D. (d); 135: Projection length (L); 1: Plunger No.

Plunger table					
Model	Plunger No. A				
	No.1	No.2	No.3	No.4	No.5
BT40-HC16	+32 ~ +22.1	+22 ~ +12.1	+12 ~ +2.1	+2 ~ -7.9	-8 ~ -17.9
BT40-HC20	+32 ~ +22.1	+22 ~ +12.1	+12 ~ +2.1	+2 ~ -7.9	-8 ~ -17.9
BT40-HC25	+34 ~ +24.1	+24 ~ +14.1	+14 ~ +4.1	+4 ~ -5.9	-6 ~ -15.1
BT50-HC16	+40 ~ +30.1	+30 ~ +20.1	+20 ~ +10.1	+10 ~ +0.1	0 ~ -9.9
BT50-HC20	+40 ~ +30.1	+30 ~ +20.1	+20 ~ +10.1	+10 ~ +0.1	0 ~ -9.9
BT50-HC25	+42 ~ +32.1	+32 ~ +22.1	+22 ~ +12.1	+12 ~ +2.1	+2 ~ -7.9

Seal unit
P. 178

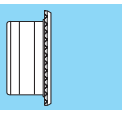

Hex. Wrench
P. 095



Inch to Metric (mm) → Inch × 25.4
Metric (mm) to Inch → Metric ÷ 25.4 or Metric × 0.03937

Special / Custom Sizes on request

TP-CS

Tapping Chuck (Coolant Inducer)

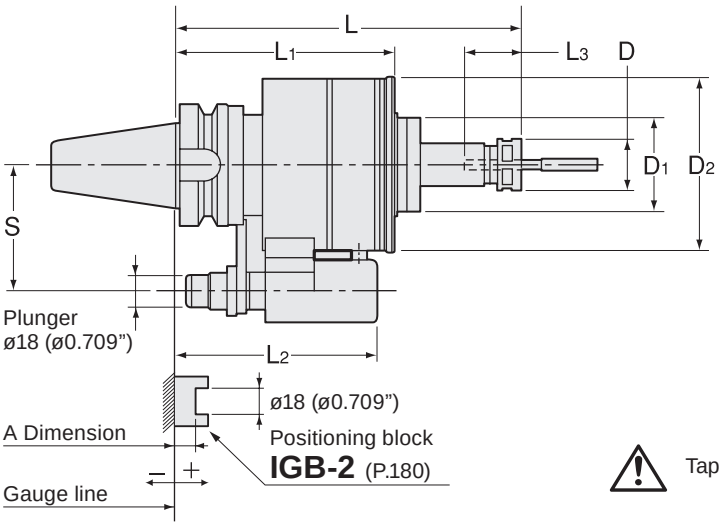

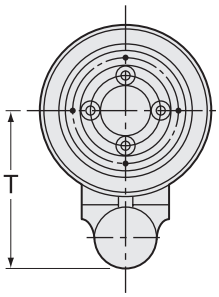

⚠ Tap sizes are based on old JIS standard.

Metric Sizes

Unit : Metric

Code	Model	Tap size	L	L1	L2	L3 ± 3	D	Compresion	Tension	D1	D2	T	S	MAX min^{-1}	Max. Coolant	Seal unit	kg
2980 6309180 ※	**BT40 -TP09 -180CS-** ※	M6 ~ M10	180	114	105	26	26	0.5	20	48	90	81	65	5,000	2MPa	CS-3	4.9
2980 6312195 ※	**BT40 -TP12 -195CS-** ※	M6 ~ M10	195	114	105	35	32	0.5	20	48	90	81	65	5,000	2MPa	CS-3	4.5
2980 6312195 ※	**-195CS-** ※	M12 ~ M14	195	114	105	40	32	0.5	20	48	90	81	65	5,000	2MPa	CS-3	4.5
2980 6316210 ※	**BT40 -TP16 -210CS-** ※	M12 ~ M14	210	128	117	40	36	0.5	20	58	100	81	65	4,000	2MPa	CS-4	5.0
2980 6316210 ※	**-210CS-** ※	M16 ~ M18	210	128	117	47	36	0.5	20	58	100	81	65	4,000	2MPa	CS-4	5.0
2980 6322225 ※	**BT40 -TP22 -225CS-** ※	M16 ~ M20	225	128	117	47	46	0.5	20	58	100	81	65	4,000	2MPa	CS-4	6.5
2980 6322225 ※	**-225CS-** ※	M22 ~ M27	225	128	117	53	46	0.5	20	58	100	81	65	4,000	2MPa	CS-4	6.5
2980 6509195 ※	**BT50 -TP09 -195CS-** ※	M6 ~ M10	195	123	114	26	26	0.5	20	48	90	96	80	5,000	2MPa	CS-3	7.8
2980 6512210 ※	**BT50 -TP12 -210CS-** ※	M6 ~ M10	210	123	114	35	32	0.5	20	48	90	96	80	5,000	2MPa	CS-3	8.2
2980 6512210 ※	**-210CS-** ※	M12 ~ M14	210	123	114	40	32	0.5	20	48	90	96	80	5,000	2MPa	CS-3	8.2
2980 6516210 ※	**BT50 -TP16 -210CS-** ※	M12 ~ M14	210	125	114	40	36	0.5	20	58	100	96	80	4,000	2MPa	CS-4	8.3
2980 6516210 ※	**-210CS-** ※	M16 ~ M18	210	125	114	47	36	0.5	20	58	100	96	80	4,000	2MPa	CS-4	8.3
2980 6522225 ※	**BT50 -TP22 -225CS-** ※	M16 ~ M20	225	125	114	47	46	0.5	20	58	100	96	80	4,000	2MPa	CS-4	8.5
2980 6522225 ※	**-225CS-** ※	M22 ~ M27	225	125	114	53	46	0.5	20	58	100	96	80	4,000	2MPa	CS-4	8.5

1. When ordering, please specify the plunger number(No.1~No.5).
2. Plunger is adjustable. Please refer to a chart on the right.
3. Preset driver, coolant collet and spanner are sold separately.
4. Seal unit can be replaced by customer.

Accessories

Model	Preset driver	Tap size	Collet	Spanner
TP09	CTPS09- ※	M6 ~ M10	FDC-09 (OH or C)	S-1L
TP12	CTPS12- ※	M6 ~ M14	FDC-12 (OH or C)	S-3L
TP16	CTPS16- ※	M12 ~ M18	FDC-16 (OH or C)	S-4L
TP22	CTPS22- ※	M16 ~ M27	FDC-22 (OH or C)	S-5L

1.Please specify tap size.
2.Please refer to tap size for I.D. of collet.

Seal unit

P. 178

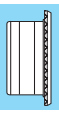

Inch to Metric (mm) → Inch × 25.4
Metric (mm) to Inch → Metric ÷ 25.4 or Metric × 0.03937

Special / Custom Sizes on request

Tap size (Old JIS)

Metric Thread	Uuified Thread	Whitworth Thread	Shank Dia. ϕ	Square □
M6	U1/4	W1/4	6	4.5
	U5/16	W5/16	6.1	5
M7 M8			6.2	5
M9 M10	U3/8	W3/8	7	5.5
M11	U7/16	W7/16	8	6
M12			8.5	6.5
	U1/2	W1/2	9	7
M14 M15	U9/16	W9/16	10.5	8
	U5/8	W5/8	12	9
M16			12.5	10
M17			13	10
M18	U3/4	W3/4	14	11
M20			15	12
M22	U7/8	W7/8	17	13

Plunger table

Model	Plunger No. A				
	No.1	No.2	No.3	No.4	No.5
BT40-TP09	+20 ~ +10.1	+10 ~ +0.1	0 ~ -9.9	-10 ~ -19.9	+20 ~ -29.9
BT40-TP12	+20 ~ +10.1	+10 ~ +0.1	0 ~ -9.9	-10 ~ -19.9	+20 ~ -29.9
BT40-TP16	+33 ~ +23.1	+23 ~ +13.1	+13 ~ +3.1	+3 ~ -6.9	-7 ~ -16.9
BT40-TP22	+33 ~ +23.1	+23 ~ +13.1	+13 ~ +3.1	+3 ~ -6.9	-7 ~ -16.9
BT50	+28 ~ +18.1	+18 ~ +8.1	+8 ~ -1.9	-2 ~ -11.9	-12 ~ -21.9

Ordering Example

BT40 - TP 09 - 180 CS - 1

- BT40: Shank size
- 09: Size
- 180: Projection length (L)
- 1: Plunger No.

Inch to Metric (mm) → Inch × 25.4
Metric (mm) to Inch → Metric ÷ 25.4 or Metric × 0.03937

Special / Custom Sizes on request

MT-CS

Morse Taper Holder (Coolant Inducer)

Type1

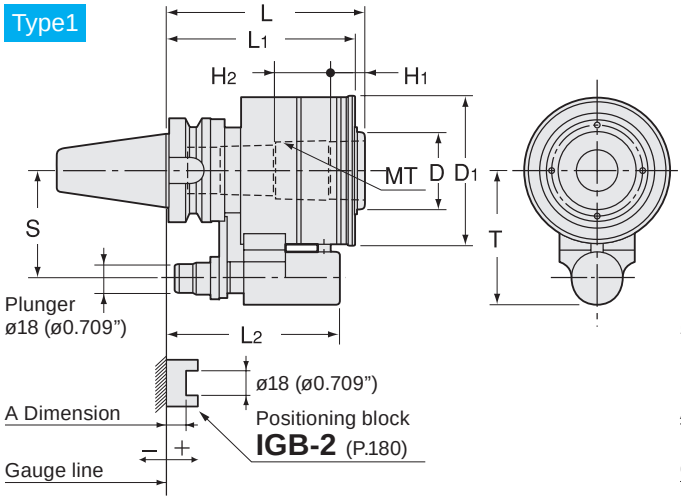

Type2

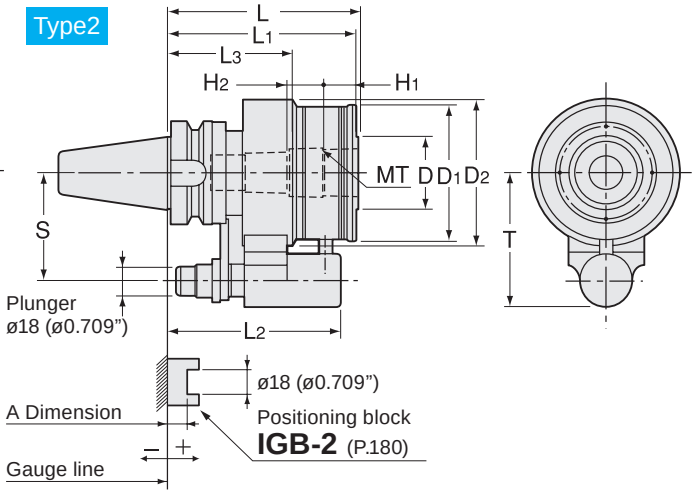

Metric Sizes

Unit : Metric

Code	Model	Type	MT	L	L1	L2	L3	D	D1	D2	T	H1	H2	S	MAX min^{-1}	Max. Coolant	Seal unit	kg
2980 1303115 ※	**BT40 -MT3 -115CS-** ※	2	3	115	114	105	75	45	82	89	81	21	22	65	6,000	2MPa	CS-2	3.3
2980 1304120 ※	**BT40 -MT4 -120CS-** ※	1	4	120	114	105	—	48	90	—	81	21	34	65	5,000	2MPa	CS-3	3.4
2980 1503125 ※	**BT50 -MT3 -125CS-** ※	2	3	125	123	114	84	45	82	89	96	21	22	80	6,000	2MPa	CS-2	6.4
2980 1504135 ※	**BT50 -MT4 -135CS-** ※	1	4	135	123	114	—	48	90	—	96	21	34	80	5,000	2MPa	CS-3	6.8
2980 1505135 ※	**BT50 -MT5 -135CS-** ※	1	5	135	125	114	—	58	100	—	96	28	40	80	4,000	2MPa	CS-4	7.2

1. When ordering, please specify the plunger number(No.1~No.5).
2. Plunger is adjustable. Please refer to a chart on the right.
3. Seal unit can be replaced by customer.

Ordering Example

BT50 - **MT4** - **120** **CS** - **1**

Shank size: BT50 | MT4 | Projection length (L): 120 | Plunger No.: 1

Plunger table

Model	Plunger No. A				
	No.1	No.2	No.3	No.4	No.5
BT40	+20 ~ +10.1	+10 ~ +0.1	0 ~ -9.9	-10 ~ -19.9	-20 ~ -29.9
BT50	+28 ~ +18.1	+18 ~ +8.1	+8 ~ -1.9	-2 ~ -11.9	-12 ~ -21.9

Seal unit

P. 178

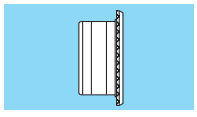

Reduction sleeve for CMT

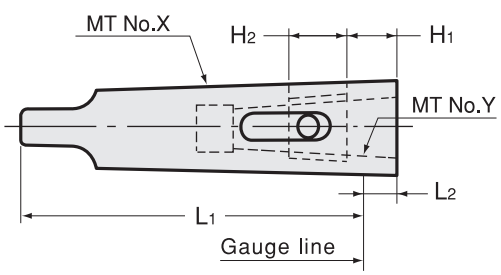

Code	Model	MT No.X	MT No.Y	L1	L2	H1	H2	kg
2504 11000031	**CMT3 -1**	3	1	94	5	13	15	0.3
2504 11000032	**-2**	3	2	94	15	17	20	0.3
2504 11000041	**CMT4 -1**	4	1	117.5	4.5	13	15	0.6
2504 11000042	**-2**	4	2	117.5	6.5	17	20	0.6
2504 11000043	**-3**	4	3	117.5	22.5	21	22	0.7
2504 11000052	**CMT5 -2**	5	2	149.5	0.5	17	20	1.4
2504 11000053	**-3**	5	3	149.5	2.5	21	22	1.3
2504 11000054	**-4**	5	4	149.5	15.5	21	34	1.3

Inch to Metric (mm) → Inch × 25.4
Metric (mm) to Inch → Metric ÷ 25.4 or Metric × 0.03937

Special / Custom Sizes on request

SL-CS

Side Lock Holder (Coolant Inducer)

Type1

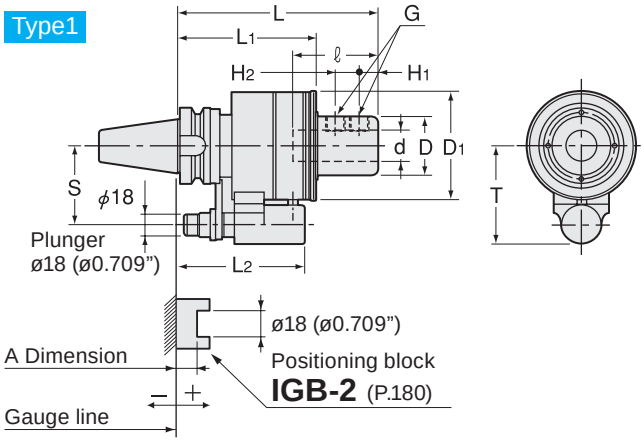

Type2

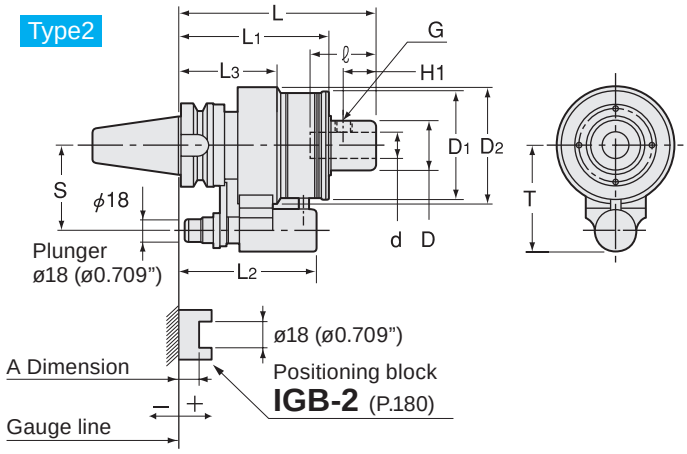

Metric Sizes

Unit : Metric

Code	Model	Type	d	L	L1	D	D1	D2	ℓ	L2	L3	T	H1	H2	G	S	MAX min^{-1}	Max. Coolant	Seal unit	kg
2980 0316150 ※	**BT40 -SL16 -150CS-** ※	2	16	150	114	38	82	89	48	105	75	81	25	—	M12	65	6,000	2MPa	CS-2	4.7
2980 0320150 ※	**BT40 -SL20 -150CS-** ※	2	20	150	114	38	82	89	50	105	75	81	25	—	M12	65	6,000	2MPa	CS-2	4.7
2980 0325165 ※	**BT40 -SL25 -165CS-** ※	1	25	165	114	48	90	—	56	105	—	81	15	20	M16	65	5,000	2MPa	CS-3	5.2
2980 0332180 ※	**BT40 -SL32 -180CS-** ※	1	32	180	128	58	100	—	60	117	—	81	15	20	M16	65	4,000	2MPa	CS-4	6.5
2980 0516165 ※	**BT50 -SL16 -165CS-** ※	2	16	165	123	38	82	89	48	114	84	96	25	—	M12	80	6,000	2MPa	CS-2	8.0
2980 0520165 ※	**BT50 -SL20 -165CS-** ※	2	20	165	123	38	82	89	50	114	84	96	25	—	M12	80	6,000	2MPa	CS-2	7.9
2980 0525180 ※	**BT50 -SL25 -180CS-** ※	1	25	180	123	48	90	—	56	114	—	96	15	20	M16	80	5,000	2MPa	CS-3	8.5
2980 0532180 ※	**BT50 -SL32 -180CS-** ※	1	32	180	125	58	100	—	60	114	—	96	15	20	M16	80	4,000	2MPa	CS-4	9.4
2980 0540180 ※	**BT50 -SL40 -180CS-** ※	1	40	180	125	90	100	—	70	114	—	96	15	25	M16	80	4,000	2MPa	-	10.6

1. When ordering, please specify the plunger number(No.1~No.5).
2. Plunger is adjustable. Please refer to a chart on the right.
3. Please return your coolant holder (BT50-SL40 only) to us through your dealer for seal unit replacement.

Ordering Example

BT50 - SL 16 - 165 CS - 1

- BT50: Shank size
- 16: I.D. (d)
- 165: Projection length (L)
- 1: Plunger No.

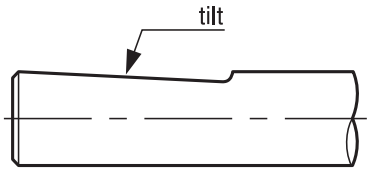

Please contact our engineering staff if flats are tilted.

Plunger table

Model	Plunger No. A				
	No.1	No.2	No.3	No.4	No.5
BT40-SL16	+20 ~ +10.1	+10 ~ +0.1	0 ~ -9.9	-10 ~ -19.9	-20 ~ -29.9
BT40-SL20	+20 ~ +10.1	+10 ~ +0.1	0 ~ -9.9	-10 ~ -19.9	-20 ~ -29.9
BT40-SL25	+20 ~ +10.1	+10 ~ +0.1	0 ~ -9.9	-10 ~ -19.9	-20 ~ -29.9
BT40-SL32	+33 ~ +23.1	+23 ~ +13.1	+13 ~ +3.1	+3 ~ -6.9	-7 ~ -16.9
BT50	+28 ~ +18.1	+18 ~ +8.1	+8 ~ -1.9	-2 ~ -11.9	-12 ~ -21.9

Reduction sleeve for CSL

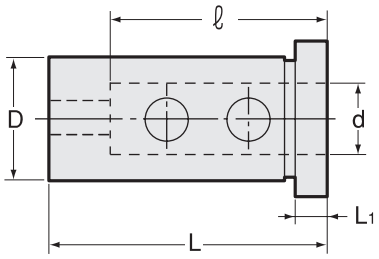

Code	Model	d	D	ℓ	L	L1	kg
2504 01002016	**CSL20 -16**	16	20	48	55.5	5.5	0.1
2504 01002516	**CSL25 -16**	16	25	48	61.5	5.5	0.2
2504 01002520	**CSL25 -20**	20	25	50	61.5	5.5	0.2
2504 01003216	**CSL32 -16**	16	32	48	65.5	5.5	0.3
2504 01003220	**CSL32 -20**	20	32	50	65.5	5.5	0.3
2504 01003225	**CSL32 -25**	25	32	56	65.5	5.5	0.2
2504 01004016	**CSL40 -16**	16	40	48	75.5	5.5	0.7
2504 01004020	**CSL40 -20**	20	40	50	75.5	5.5	0.7
2504 01004025	**CSL40 -25**	25	40	56	75.5	5.5	0.6
2504 01004032	**CSL40 -32**	32	40	60	75.5	5.5	0.6

Inch to Metric (mm) → Inch × 25.4
Metric (mm) to Inch → Metric ÷ 25.4 or Metric × 0.03937

Special / Custom Sizes on request

CS

Seal Unit

When replacing seal unit, please purchase both body and seal sleeve.

Seal unit body

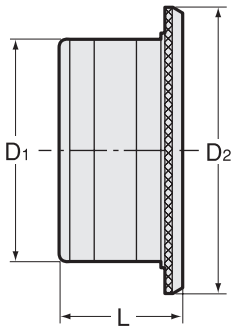

Seal sleeve

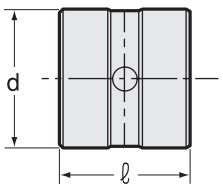

Unit : Metric (inch)

Code	Model	Seal unit body			Seal sleeve	
		D1	D2	L	d	ℓ
2984 00000001	**CS-1**	56 (2.205)	71 (2.795)	31 (1.220)	35 (1.378)	33 (1.299)
2984 00000002	**CS-2**	67 (2.638)	82 (3.228)	31 (1.220)	45 (1.772)	33 (1.299)
2984 00000003	**CS-3**	75 (2.953)	90 (3.543)	31 (1.220)	55 (2.165)	33 (1.299)
2984 00000004	**CS-4**	85	100	31	65	33

Seal unit body and seal sleeve are made as one unit.

When replacing 2 seals only, please purchase a seal set as shown below.

Seal

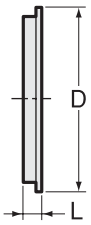

Seal sleeve

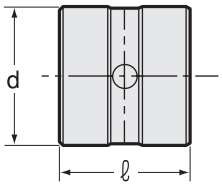

Unit : Metric (inch)

Code	Model	Seal			Seal sleeve		
		D	L	Qty	d	ℓ	Qty
2984 10000001	**CS-1P**	47 (1.850)	4.8 (0.189)	2	35 (1.378)	33 (1.299)	1
2984 10000002	**CS-2P**	57 (2.244)	4.8 (0.189)	2	45 (1.772)	33 (1.299)	1
2984 10000003	**CS-3P**	67 (2.638)	4.8 (0.189)	2	55 (2.165)	33 (1.299)	1
2984 10000004	**CS-4P**	77	4.8	2	65	33	1

1.2 seals and 1 seal sleeve are made as one unit.
2.Refer to “How to replace seal unit” in the instruction manual.

Inch to Metric (mm) → Inch × 25.4
Metric (mm) to Inch → Metric ÷ 25.4 or Metric × 0.03937

Special / Custom Sizes on request

Positioning Block

Before using NT's Coolant Inducer, Hyper Spindle or Angle Heads, please install a positioning block to your M/C.

What is “A” dimension?

“A” dimension is an axial distance between your machine’s gauge line and the bottom of the groove of the positioning block.
This “A” dimension is VERY important to be able to use our plunger products correctly. Using incorrect plunger size may result in damaging the products. NT TOOL can help you measure this “A” dimension. Please call us with this page opened. Also, your “Spindle surface drawing” from your machine manufacturer is helpful.

Positioning Block
Spindle surface where the positioning block will be mounted on could be lower than gauge line.

A Dimension (+)

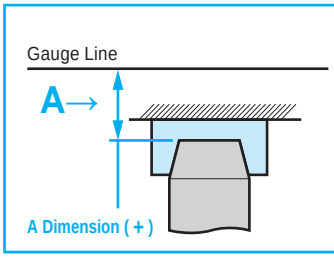

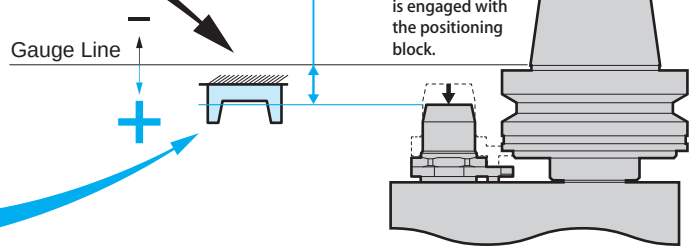

The plunger needs to be pushed down 6mm when engaged with the positioning block. (Except BT30 shank is 5mm)

When the plunger is engaged with the positioning block.

Positioning Block
Spindle surface where the positioning block will be mounted on could be higher than gauge line.

A Dimension (–)

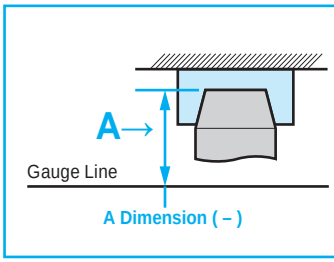

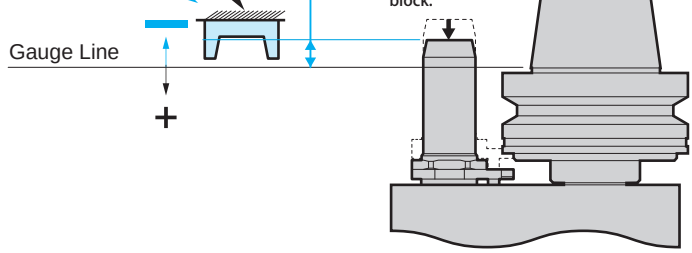

The plunger needs to be pushed down 6mm when engaged with the positioning block. (Except BT30 shank is 5mm)

When the plunger is engaged with the positioning block.

In order to retrofit NT standard positioning blocks to your existing machine, a base plate shown below must be made.
For more details, please contact NT USA.

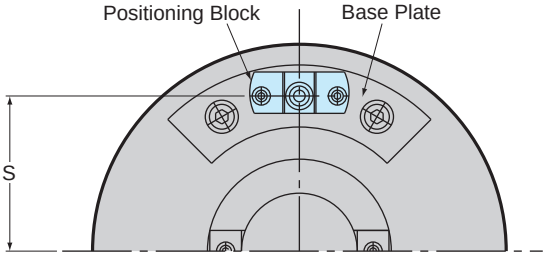

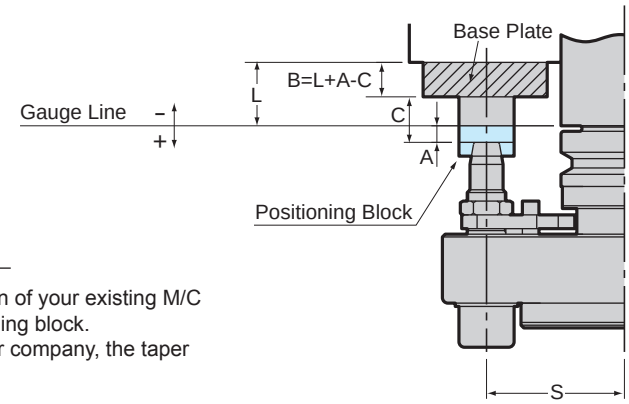

- Please provide us with the detailed information of your existing M/C when you place an order for a special positioning block.
- When using a positioning block made by other company, the taper angle must be the same as our product.

Inch to Metric (mm) → Inch × 25.4
Metric (mm) to Inch → Metric ÷ 25.4 or Metric × 0.03937

Special / Custom Sizes on request

Positioning Blocks Dimensional data

Before using NT's Coolant Inducer, Hyper Spindle or Angle Heads, please install a positioning block to your M/C.

Part Number	Suitable tool holders
IGB-1	40/50 Hyper Spindles
IGB-2	40/50 Coolant Inducer (and Hyper Spindles)
IGB-3	Angle Heads BT30
IGB-4	Angle Heads Fixed types (BT40, CAT40, HSK63A)
IGB-5	Angle Heads Fixed types with center-thru coolant feed (BT40, CAT40, HSK63A)
IGB-6	Angle Heads Fixed types (BT50, CAT50, HSK100A) and Flexible Types (BT40, BT50, CAT40, CAT50, HSK63A, HSK100A)
IGB-7	Angle Heads Fixed Types with center-thru coolant feed (BT50, CAT50, HSK100A)

IGB-1 (40/50 Hyper Spindles)

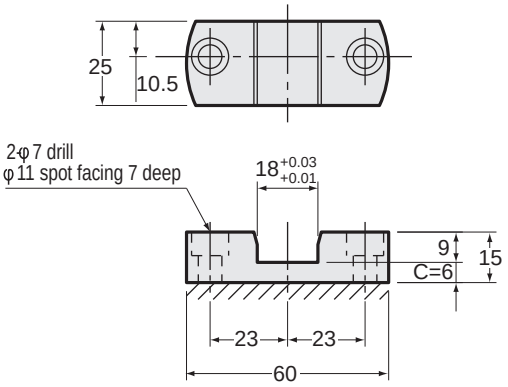

IGB-2 (40/50 Coolant Inducer (and Hyper Spindles))

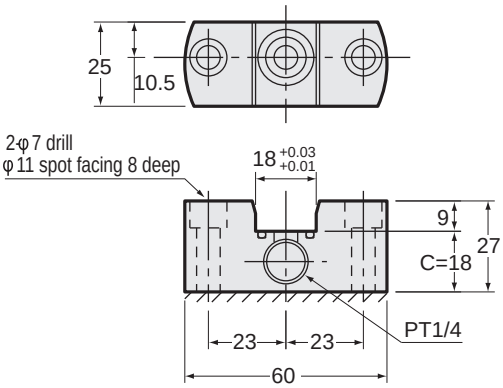

IGB-3 (Angle Heads BT30)

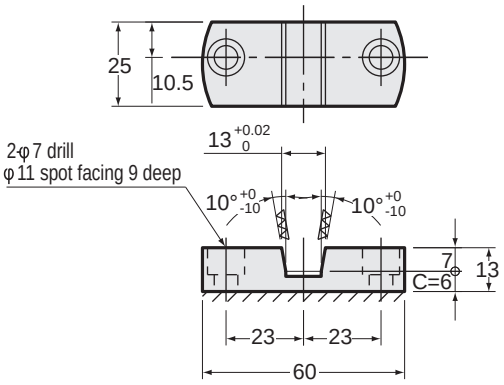

IGB-4 Angle Heads Fixed types (BT40, CAT40, HSK63A)

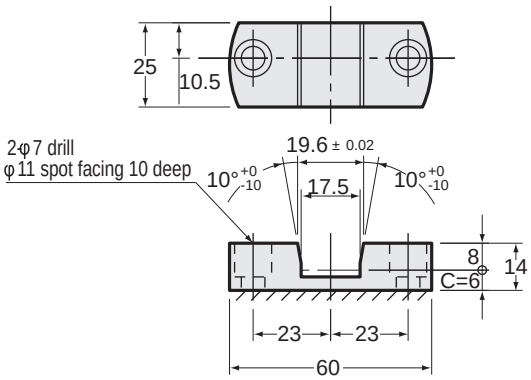

IGB-5 Angle Heads Fixed types with center-thru coolant feed (BT40, CAT40, HSK63A)

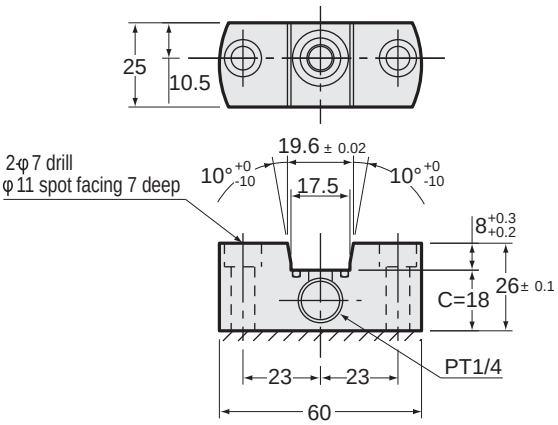

IGB-6 Angle Heads Fixed types (BT50, CAT50, HSK100A) and Flexible Types (BT40, BT50, CAT40, CAT50, HSK63A, HSK100A)

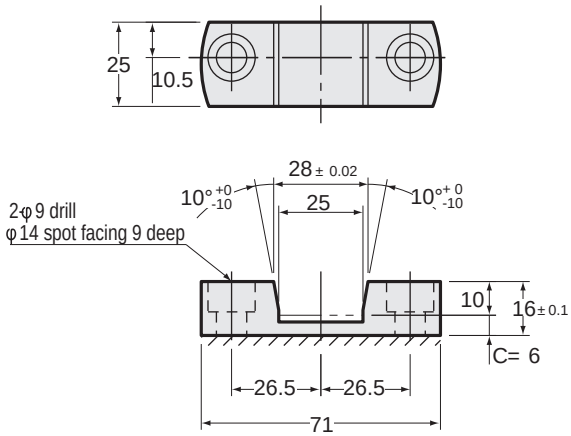

IGB-7 Angle Heads Fixed Types with center-thru coolant feed (BT50, CAT50, HSK100A)

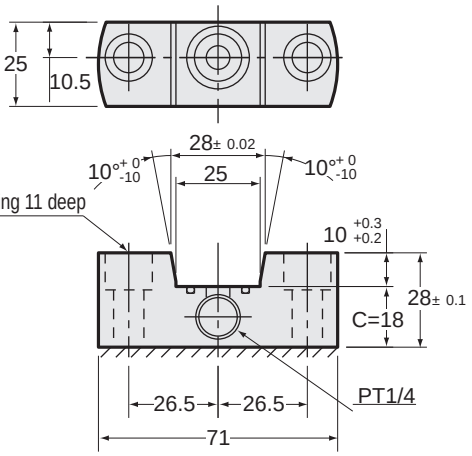

Inch to Metric (mm) → Inch × 25.4
Metric (mm) to Inch → Metric ÷ 25.4 or Metric × 0.03937

Special / Custom Sizes on request

SBV New

Turning Tools for brother's SPEEDIO M140X1

● For External / Facing

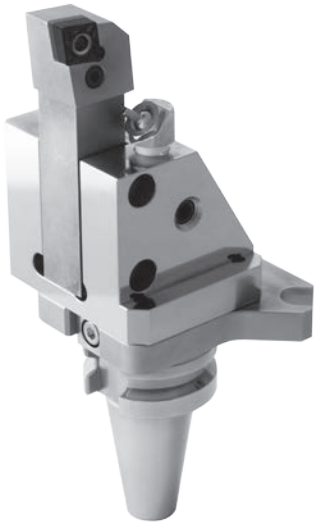

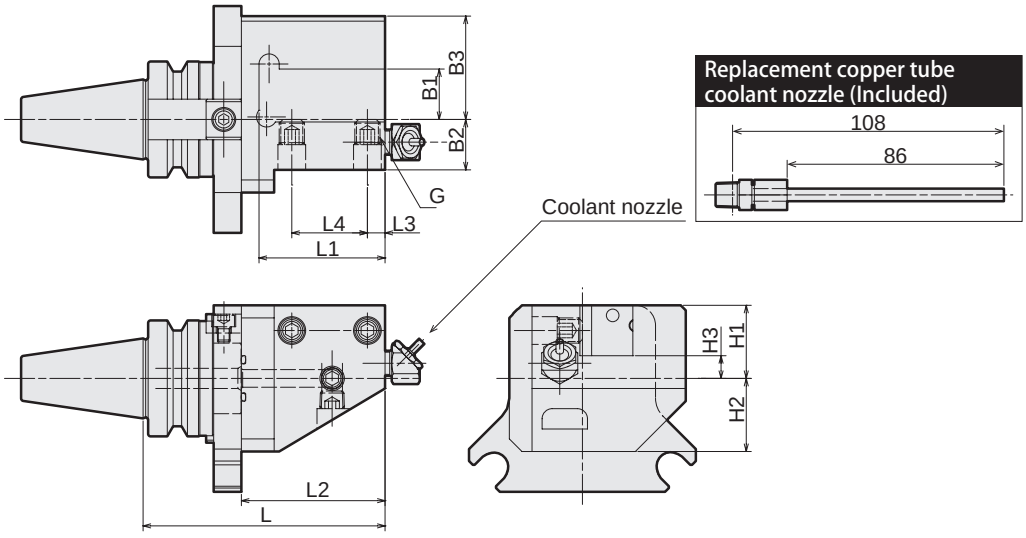

Right hand type shown above.

Code	Model	L	L1	L2	L3	L4	B1	B2	B3	H1	H2	H3	G	Kg
2120 02020096	BT30 -SBV2020 R -96	96	50	57	7	30	20	20	41	29	29	9	M10	2.0
2120 02120096	BT30 -SBV2020 L -96													

1. Direction of the coolant nozzle is adjustable.
2. Please replace the standard coolant nozzle with the replacement copper tube coolant nozzle (included) in case coolant is not reaching the cutting edge.
3. Please shorten a square bit if necessary.

Ordering Example

BT30 - **SBV 2020** **R** - **75**

BT30: Shank size; R: Left hand - L, Right hand - R; 75: Projection length (L)

SBH New

Turning Tools for brother's SPEEDIO M140X1

● For Facing



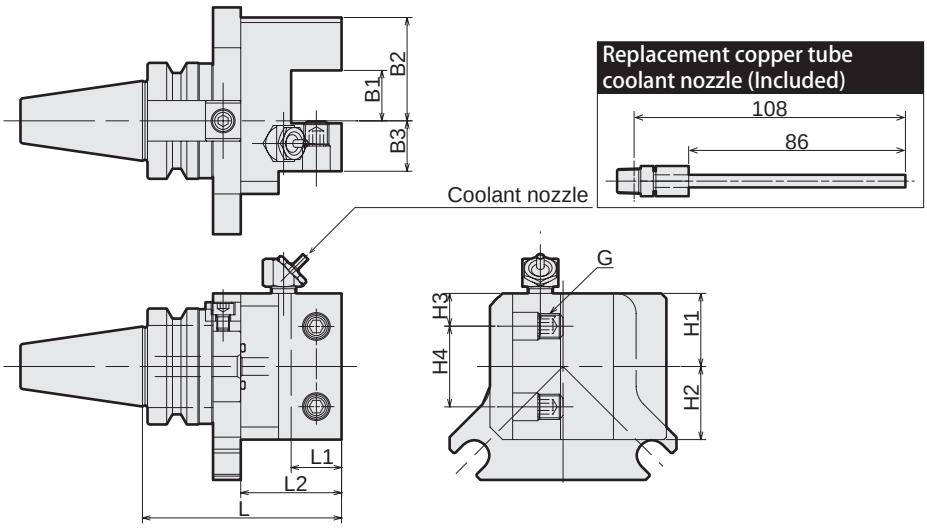

Right hand type shown above.

Code	Model	L	L1	L2	B1	B2	B3	H1	H2	H3	H4	G	Kg
2120 01020079	BT30 -SBH2020 R -79	79	20	40	20	41	20	29	29	13	32	M10	1.8
2120 01120079	BT30 -SBH2020 L -79												

1. Direction of the coolant nozzle is adjustable.
2. Please replace the standard coolant nozzle with the replacement copper tube coolant nozzle (included) in case coolant is not reaching the cutting edge.
3. Please shorten a square bit if necessary.

Ordering Example

BT30 - SBH 2020 R - 79

- BT30: Shank size
- R: Left hand - L, Right hand - R
- 79: Projection length (L)

Inch to Metric (mm) → Inch × 25.4
Metric (mm) to Inch → Metric ÷ 25.4 or Metric × 0.03937

Special / Custom Sizes on request

TSB New

Turning Tools for brother's SPEEDIO M140X1

● For Boring bar

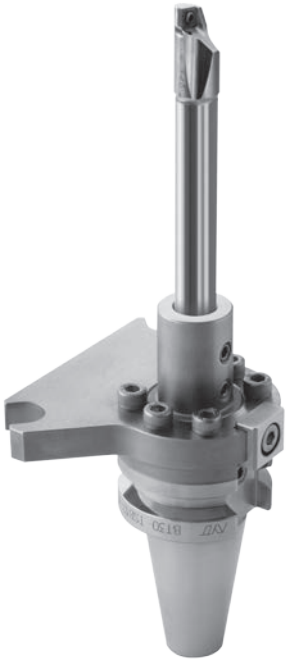

Type1

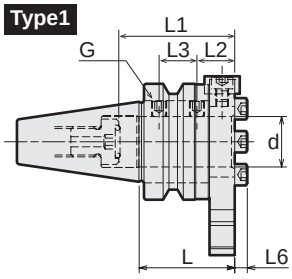

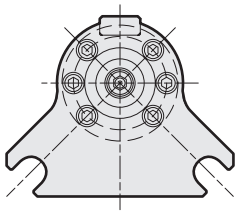

Type2

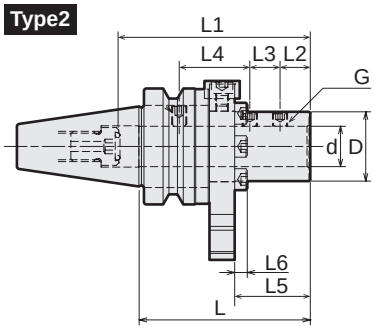

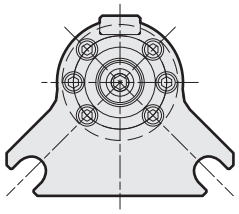

Code	Model	Type	d	D	L	L1	L2	L3	L4	L5	L6	G	Kg
2120 00010038	**BT30 -TSB10 - 38**	1	10	-	38	40	15	15	-	-	5	M6	0.8
2120 00010068	**BT30 -TSB10 - 68**	2	10	20	68	45	12	12	-	30	5	M6	0.9
2120 00012038	**BT30 -TSB12 - 38**	1	12	-	38	40	15	15	-	-	5	M6	0.8
2120 00012068	**BT30 -TSB12 - 68**	2	12	22	68	65	12	12	26	30	5	M6	0.9
2120 00016038	**BT30 -TSB16 - 38**	1	16	-	38	46	15	15	-	-	5	M6	0.8
2120 00016068	**BT30 -TSB16 - 68**	2	16	27.5	68	76	12	12	26	30	5	M6	0.9
2120 00020038	**BT30 -TSB20 - 38**	1	20	-	38	46	15	15	-	-	5	M6	0.8

Ordering Example

BT30 - **TSB** **20** - **38**

Shank size | I.D. (d) | Projection length (L)

Inch to Metric (mm) → Inch × 25.4
Metric (mm) to Inch → Metric ÷ 25.4 or Metric × 0.03937

Special / Custom Sizes on request

Retention Stud

Center- thru noncompliant

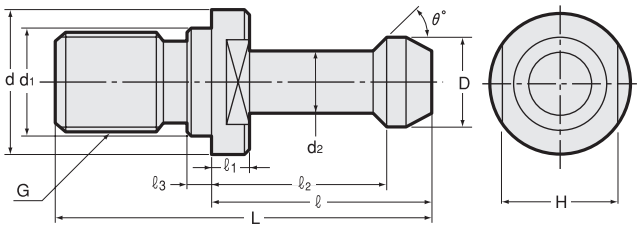

Center- thru compliant **PSB-25**

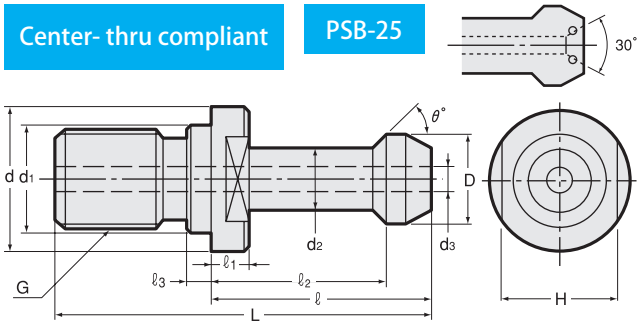

Metric Sizes

Unit : Metric

Code	Model	Shank	Standard	Center-thru	D 0 -0.1	d	d1 h7	d2 0 -0.1	L	ℓ	ℓ1	ℓ2 0 -0.1	ℓ3	H	G	θ °	d3
0754 00000000	**PSB -0**	BT30	MAS-1	—	11	16.5	12.5	7	43	23	5	18	4	13	M12	45°	—
0754 00000100	**PSB -0A**	BT30	MAS-2	—	11	16.5	12.5	7	43	23	5	18	4	13	M12	60°	—
0754 00000001	**PSB -1**	—	—	—	13.7	20	13	8.9	53	28	5	22.5	5	17	M12	60°	—
0754 00000002	**PSB -2**	BT30	—	—	10	18	13	7	43	25	5	20	3	14	M12	45°	—
0754 00000302	**PSB -2M**	BT35	MAS-1	—	13	20	12.5	8.5	48	28	5	22.5	4	17	M12	45°	—
0754 00000003	**PSB -3**	BT40	MAS-1	—	15	23	17	10	60	35	6	28	5	19	M16	45°	—
0754 00000004	**PSB -4**	BT40	MAS-2	—	15	23	17	10	60	35	6	28	5	19	M16	60°	—
0754 00000005	**PSB -5**	BT45	MAS-1	—	19	31	21	14	70	40	8	31	6	24	M20	45°	—
0754 00000007	**PSB -7**	BT50	MAS-1	—	23	38	25	17	85	45	10	35	8	30	M24	45°	—
0754 00000008	**PSB -8**	BT50	MAS-2	—	23	38	25	17	85	45	10	35	8	30	M24	60°	—
0754 00000009	**PSB -9**	BT40	—	—	15	23	17	10	54.6	30	5	23	5	19	M16	90°	—
0754 00000010	**PSB -10**	BT40	—	—	15	23	17	10	50	25	5	18	5	19	M16	90°	—
0754 00000011	**PSB -11**	BT40	—	—	15	23	17	10	60	35	6	28	5	19	M16	90°	—
0754 00000013	**PSB -13**	BT50	—	—	25	39	25	18	95	55	29	45.5	8	30	M24	60°	—
0754 00000014	**PSB -14**	BT50	—	—	23	38	25	17	85	45	7.5	35	8	30	M24	90°	—
0754 00000015	**PSB -15**	BT50	—	—	22	38	25	17	111	73	37	63	5	30	M24	45°	—
0754 00000016	**PSB -16**	BT50	—	—	21	39	25	15	105	63	29	55	5	30	M24	45°	—
0754 00000017	**PSB -17**	BT50	—	—	24	36	25	18	71	31	5	23	8	30	M24	90°	—
0754 00000018	**PSB -18**	BT50	—	—	22	38	25	16	112	72	35	61	6	30	M24	60°	—
0754 00000019	**PSB -19**	BT50	—	—	23	38	25	17	85	45	10	35	8	30	M24	90°	—
0754 00000022	**PSB -22**	BT50	—	—	23	39.6	25	18	104	64	30	56	8	29	M24	4R	—
0754 00000023	**PSB -23**	BT40	—	○	18.8	22	17	12.5	44.1	19.1	3	14	5	19	M16	45°	7
0754 00000024	**PSB -24**	BT50	—	○	29	37	25	20.9	65.2	25.2	5	17.6	8	30	M24	45°	10
0754 00000025	**PSB -25**	BT40	—	○	19	23	17	14	54	29	4	23	7	19	M16	75°	7
0754 00000026	**PSB -26**	BT30	—	○	11	16.5	12.5	7.5	43	23	5	18	4	13	M12	60°	2.5
0754 10000000	**PSB -0-CH**	BT30	MAS-1	○	11	16.5	12.5	7	43	23	5	18	5.5	13	M12	45°	2.5
0754 10000100	**PSB -0A-CH**	BT30	MAS-2	○	11	16.5	12.5	7	43	23	5	18	5.5	13	M12	60°	2.5
0754 10000401	**PSB -1T**	BT30	—	○	11	16.5	12.5	8	43	23	5	18	5.5	13	M12	45°	4
0754 10000003	**PSB -3-CH**	BT40	MAS-1	○	15	23	17	10	60	35	6	28	7	19	M16	45°	4
0754 10000004	**PSB -4-CH**	BT40	MAS-2	○	15	23	17	10	60	35	6	28	7	19	M16	60°	4
0754 10000007	**PSB -7-CH**	BT50	MAS-1	○	23	38	25	17	85	45	10	35	10	30	M24	45°	6
0754 10000008	**PSB -8-CH**	BT50	MAS-2	○	23	38	25	17	85	45	10	35	10	30	M24	60°	6
0754 00000030	**PSB -30P**	BT30	JIS-30P	○	12	16.5	12.5	8	43	23.4	5	18.4	6	13	M12	75°	4
0754 00000040	**PSB -40P**	BT40	JIS-40P	○	19	23	17	14	54	29	7	23	7	19	M16	75°	7
0754 00000050	**PSB -50P**	BT50	JIS-50P	○	28	38	25	21	74	34	7	25	10	30	M24	75°	10

Inch to Metric (mm) → Inch × 25.4
Metric (mm) to Inch → Metric ÷ 25.4 or Metric × 0.03937

Special / Custom Sizes on request

Retention Stud Selection Table

1.This selection table describes standard retention studs for each of standard machines. Please check operation manual of machines to select appropriate type of the retention studs.
2.Take note that our center through coolant retention stud may not be used on certain M/C because of specifications.

Machine Tool Maker	M/C Model	BT	Center Through Coolant	PSB
IKEGAI	TV4, TH500	BT40	No	PSB-3
	TVU400, THU500	BT40	Yes	PSB-40P
	TV5, TH600, TVU5, THU600, NB110T, NB130T	BT50	No	PSB-7
ENSHU	JE Series, E130, ES400, EV360	BT30	No	PSB-0A
	JE Series, E130, ES400, EV360	BT30	Yes	PSB-0A -CH
	JE Series, EV Series, ES450	BT40	No	PSB-4
	JE Series, EV Series, ES450	BT40	Yes	PSB-4 -CH
	JE Series, EV Series	BT50	No	PSB-8
	JE Series, EV Series	BT50	Yes	PSB-8 -CH
OKUMA	MU Series, MA-400H, MB Series	BT40	Yes	PSB-4 -CH
	MILLAC Series	BT40	Yes	PSB-3 -CH
	MA Series, MB Series, MCR Series, MCM-B, MCV-AII, MILLACSeries	BT50	Yes	PSB-8 -CH
	MU Series, MA-400H, MB Series	BT40	No	PSB-4
	MILLAC Series	BT40	No	PSB-3
	MA Series, MB Series, MCR Series, MCM-B, MCV-AII, MILLACSeries	BT50	No	PSB-8
OKK	PM Series, HM Series, PG-8, 5AX Series, VM Series, VP Series, GR, VC51, VB53	BT40	No	PSB-3
	MCV1260, HM Series, HCM1000II, 5AX Series, VPSeries	BT50	No	PSB-19
	PM Series, HM Series, 5AX Series, GC Series, VC51, VB53	BT40	Yes	PSB-3 -CH
	HM Series, 5AX Series	BT50	Yes	Custom sizes available
KITAMURA	Mycenter Series, Nano Mycenter	BT30	No	PSB-0
	Mycenter Series	BT30	Yes	PSB-30P
	Mycenter Series	BT40	Yes	PSB-40P
	Mycenter Series, BRIDGE center, HX500i, HX630i, H500	BT50	Yes	PSB-50P
KIRA	PC Series, KPC Series, HPC30Vb	BT30	No	PSB-0
	PC Series, KPC Series, HPC30Vb(Center Through Coolant model)	BT30	Yes	PSB-0-CH
	KN Series, VTC Series, PC-40b	BT40	No	PSB-3
	KN Series, VTC Series, PC-40b(Center Through Coolant model)	BT40	Yes	PSB-3-CH
KIWA	V21 Series, V41 Series, KH-45, KH-41, KNH400/426, KCW-10V	BT40	Yes	PSB-40P
	D433 Series, EX Series, PX Series, PMM40, AD-8	BT40	No	PSB-3
	D433 Series, EX Series, PX Series, PMM40, AD-8	BT40	Yes	PSB-3 -CH
	KH-55	BT50	Yes	PSB-50P
KURAKI	KBT, KBF, KBM, KBH, KGD, CMN, KMP	BT50	No	PSB-7
SHIZUOKA	CM-210G	BT30	No	PSB-0
	B Series, CM-350G	BT40	No	PSB-11
	BSeries	BT50	No	PSB-19
SNK	CMV Series	BT40	No	PSB-4
	CMV Series, DC Series, HF Series, PC Series, RB Series, AIC Series, MAC Series	BT50	No	PSB-8
	FSP Series, HPS Series, PARTE	BT50	No	PSB-8
SUGINO	NSV-1555, SCV-1555, SCV-611, SCH Series	BT30	No	PSB-0A
TAKISAWA	MAC-V40 / Y520	BT40	Yes	PSB-40P
	MAC-V1E / 430VP	BT40	No	PSB-3
TSUGAMI	VMA3-III, VML3-III, VMC3-III, VA32A	BT30	No	PSB-0
	VMA4-III, VLA4-III, FMA3-III, FMA5-III	BT40	No	PSB-3
	VMT4-III, VLT4-III	BT40	Yes	PSB-40P
TOSHIBA	BF, BMC, BTD, BTF Series, BTU-14, VMC-7, NX-630, BTH Series	BT50	No	PSB-7
TOYOSK	TVT Series, THMC Series, TVMC310	BT30	No	PSB-0A
	H46, THMC410	BT40	No	PSB-3
	H46, THMC410	BT40	Yes	PSB-3 -CH
JTEKT	FV Series, UXSeries	BT40	No	PSB-3
	FV Series, RBSeries, SBSeries	BT50	No	PSB-7
	FV Series	BT40	Yes	PSB-3-CH
	FV Series	BT50	Yes	PSB-7-CH
	FHSeries	BT40	No	PSB-3 or PSB-10
	FHSeries	BT40	Yes	PSB-40P
	FHSeries, FA Series	BT50	No	PSB-7 or PSB-17
	FHSeries, FA Series	BT50	Yes	PSB-50P
NIIGATA	HNSeries(Standard model), ULTYSeries (Standard model)	BT50	No	PSB-8
Nishida Machine	HFA3, HLB3, HS-2A, HLA3S, VFR3	BT30	No	PSB-0
	HA40, HFB-4A, HLB-4A, HFA4, HAB4, HFB4	BT40	No	PSB-3
	HFA5, HFB5, HS Series	BT50	No	PSB-8
	HFA3, HLB3, HS-2A, HLA3S, VFR3	BT30	Yes	PSB-0-CH
	HA40, HFB-4A, HLB-4A, HFA4, HAB4, HFB4	BT40	Yes	PSB-3 -CH
	HFA5, HFB5, HS Series	BT50	Yes	PSB-8-CH

Machine Tool Maker	M/C Model	BT	Center Through Coolant	PSB
KOMATSU NTC	N3 Series, Z3V	BT30	No	PSB-0
	Z Series, TMC Series	BT40	No	PSB-3
	N5H, ZV Series	BT50	No	PSB-7
	N3 Series, Z3V	BT30	Yes	PSB-0 -CH
	Z Series, TMC Series	BT40	Yes	PSB-3 -CH
	N5H, ZV Series	BT50	Yes	PSB-7 -CH
FANUC	ROBODRILL Series	BT30	No	PSB-0
BROTHER	SPEEDIO M140X1, TC Series	BT30	No	PSB-0A
	SPEEDIO M140X1, TC Series(Center Through Coolant model)	BT30	Yes	PSB-26
HORKOS	RS50H, ES50H, NJ50	BT30	No	PSB-0
	RM70H, RM70V, DM70H, NS70	BT40	No	PSB-3
	RM100H, DM100H, NM100, HFN-C50H	BT50	No	PSB-7
	RS50H, ES50H, NJ50	BT30	Yes	PSB-0-CH
	RM70H, RM70V, DM70H, NS70	BT40	Yes	PSB-3-CH
	RM100H, DM100H, NM100, HFN-C50H	BT50	Yes	PSB-7-CH
HOWA MACHINERY	MEN-500V, MJN400, MBN-350Hα, MKN Series	BT30	Yes	PSB-0 -CH
	MBN Series	BT40	Yes	PSB-3 -CH
	MEN-500V, MJN400, MBN-350Hα, MKN Series	BT30	No	PSB-0
	MBN Series	BT40	No	PSB-3
HOMMA	HVM Series(High speed model)	BT40	No	PSB-40P
	FM Series, TAC-M Series, STAC-M Series, HVM Series(Standard model), HTM Series	BT50	No	PSB-8
	HVM Series(High speed model)	BT40	Yes	PSB-40P
	FM Series, TAC-M Series, STAC-M Series, HVM Series(Standard model), HTM Series	BT50	Yes	PSB-8-CH
MAKINO	A, V, a Series	BT40	No	PSB-3 or PSB-4
	A, V, a Series, D500	BT40	Yes	PSB-40P or PSB-3-CH or PSB-4-CH
	A, GF, MC, MCC, MCD, MCF, V, a Series	BT50	No	PSB-7 or PSB-8
Matsuura	LX Series, FX Series	BT30	No	PSB-30P
	H.Plus Series, V.Plus Series, R.Plus-800, RA-1X / 2G, Mold.Plus-800	BT40	No	PSB-10 or PSB-40P
	MAM72 Series, MC Series, FX-10G	BT40	No	PSB-10 or PSB-40P
	H.Plus-630	BT50	No	PSB-50P
	LX Series, FX Series	BT30	Yes	PSB-30P
	H.Plus Series, V.Plus Series, R.Plus-800, RA-1X / 2G, Mold.Plus-800	BT40	Yes	PSB-40P
	MAM72 Series, MC Series, FX-10G	BT40	Yes	PSB-40P
	H.Plus-630	BT50	Yes	PSB-50P
MITSUI SEIKI	HU40A, 40-T, 50A, 63A, 63A-5X, 80A, 80A-5X, VJ7, VU50A, 65A, VERTEX550-5X	BT40	No	PSB-10
	HU40A, 40-T, 50A, 63A, 63A-5X, 80A, 80A-5X, VJ7, VU50A, 65A, VERTEX550-5X	BT40	Yes	PSB-40P
	H5D, 6D, HU50-T, 50A, 50A-5X, 63A, 63A-5X, 80A, 80A-5X, HS6A-5X, HB63-T, VJ7	BT50	No	PSB-17
MITSUBISHI	M-H Series, M-V Series	BT40	No	PSB-3 or PSB-4
	M-H Series, DH Series, M-V Series, MVR Series, MVR-DX Series, MG Series, M-VRD Series	BT50	No	PSB-8 or PSB-7
	MHT Series, MAF-S Series, MAF-R Series, MAF-RS Series, MAF-C Series, MAF-B Series	BT50	No	PSB-8 or PSB-7
	M-H Series, M-V Series	BT40	Yes	PSB-3-CH or PSB-4-CH
	M-H Series, DH Series, M-V Series, MVR Series, MVR-DX Series, MG Series, M-VRD Series	BT50	Yes	PSB-8-CH or PSB-7-CH
	MHT Series, MAF-S Series, MAF-R Series, MAF-RS Series, MAF-C Series, MAF-B Series	BT50	Yes	PSB-8-CH or PSB-7-CH
MECTRON	MTV-T301, T351 Series, T360, C350, MTS-C351, MCH-80	BT30	No	PSB-0A
	MTV-C410, T451 Series, T452W, T470	BT40	No	PSB-4
MORI SEIKI	ACCUMILL Series, ULTIMILL Series	BT30	No	PSB-0
	NV Series, DuraVertical Series, VS Series, MV-653, SVL5000	BT40	No	PSB-11
	NVD Series, NH Series, SH junior, AFM2400, FM Series	BT40	No	PSB-11
	NV Series, DuraVertical Series, VS Series, MV-653, SVL5000, NVD Series	BT40	Yes	PSB-25
	NH Series, SH junior, AFM2400, FM Series(Center Through Coolant model)	BT40	Yes	PSB-25
	NV Series, VS Series, MV Series, NH Series, HG Series, MH Series	BT50	No	PSB-19
YASDA	H30i /H 40i, Vi40, YBM-640V / 950V / 9150V	BT40	No	PSB-25
	YBM-N Series, YBM-T Series, YBM-1218V	BT50	No	PSB-7
	H30i /H 40i, Vi40, YBM-640V / 950V / 9150V	BT40	Yes	Custom sizes available
	YBM-N Series, YBM-T Series, YBM-1218V	BT50	Yes	Custom sizes available
MAZAK	UN Series	BT30	Yes	Custom sizes available S/PSB-30P
	VRX Series, VCN Series, VTC Series, SVC Series, FF&F3Series, FJV Series	BT40	Yes	PSB-23
	MM/SMM Series, HCN Series, FH/PFH Series, μ Series, ANGULAX Series	BT40	Yes	PSB-23
	VRX Series, VCN Series, MAZATECH V Series, VERSATECH V Series	BT50	Yes	PSB-24
	VORTEX Series, FJV Series, HCN Series, FH Series, μ Series	BT50	Yes	PSB-24
ROKU-ROKU	RX Series	BT30	No	PSB-0
	KX, LX, MX Series	BT40	No	PSB-3
	GIGA-650	BT40	No	PSB-11

Inch to Metric (mm) → Inch × 25.4
Metric (mm) to Inch → Metric ÷ 25.4 or Metric × 0.03937

Special / Custom Sizes on request

BT, NT

Tool Shank Dimensions For BT , NT

BT Shank (MAS403-1982)

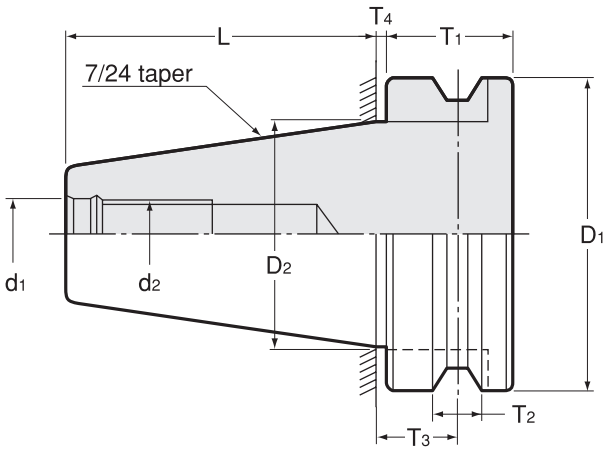

Unit : Metric

Model	D1	D2	d1	d2	L ±0.2	T1	T2 +0.1 0	T3 ±0.1	T4	Reference
BT30	46 0 -0.039	31.75	12.5 +0.027 0	M12	48.4	20	8	13.6	2	MAS
BT35	53 0 -0.046	38.1	12.5 +0.027 0	M12	56.4	22	10	14.6	2	MAS
BT35-MS	53 0 -0.046	38.1	13.0 +0.027 0	M12	56.5	20	10	13.0	2	MS
BT40	63 0 -0.046	44.45	17.0 +0.027 0	M16	65.4	25	10	16.6	2	MAS
BT45	85 0 -0.054	57.15	21.0 +0.033 0	M20	82.8	30	12	21.2	3	MAS
BT50	100 0 -0.054	69.85	25.0 +0.033 0	M24	101.8	35	15	23.2	3	MAS

BT Shank Flange-through coolant type (DIN69871/B)

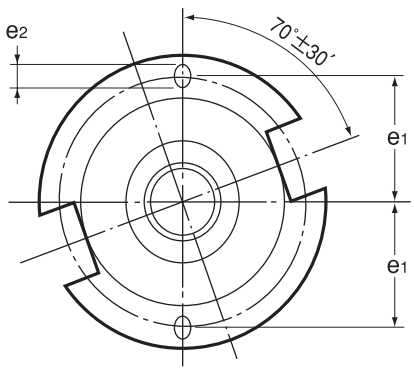

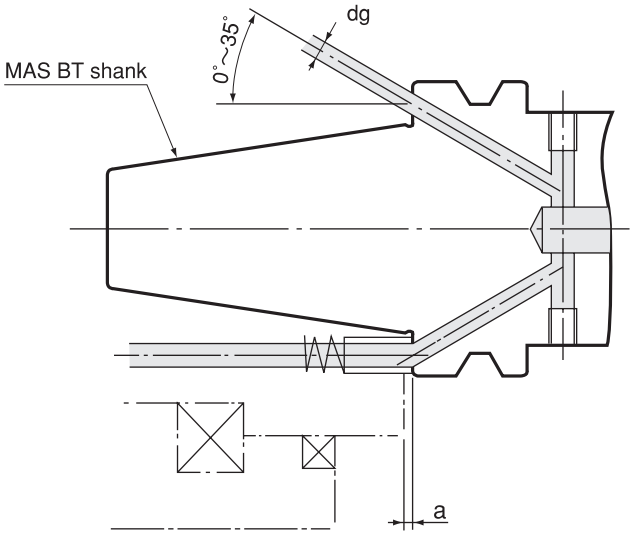

Unit : Metric

Model	dg	e1 ±0.1	e2 max	a ±0.1
BT40	4	27	5	2
BT50	6	42	7	3

Inch to Metric (mm) → Inch × 25.4
Metric (mm) to Inch → Metric ÷ 25.4 or Metric × 0.03937

Special / Custom Sizes on request

National taper shank

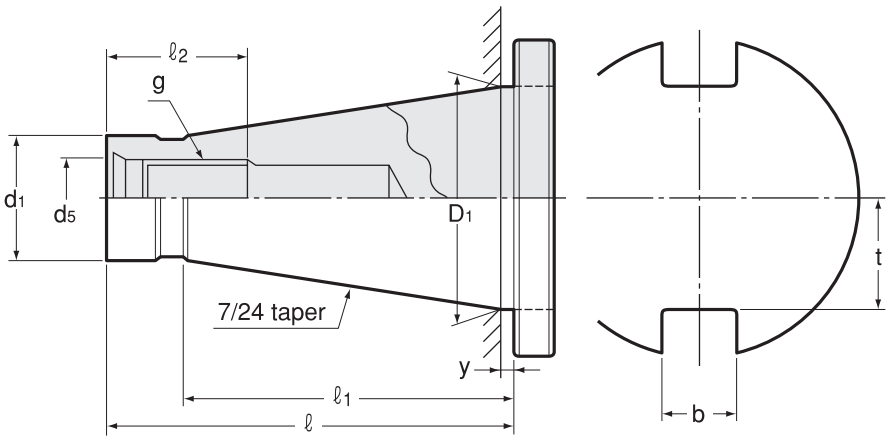

Unit : Metric

Model	D1	d1	ℓ Max	ℓ 1	y	b	t Max	g	ℓ 2	d5
NT30	31.75	17.4 $^{-0.29}_{-0.36}$	70	50	1.6	16.1 $^{+0.18}_{0}$	16.2	M12	24	12.5
NT40	44.45	25.3 $^{-0.30}_{-0.38}$	95	67	1.6	16.1 $^{+0.18}_{0}$	22.5	M16	30	17
NT50	69.85	39.6 $^{-0.31}_{-0.41}$	130	105	3.2	25.7 $^{+0.21}_{0}$	35.3	M24	45	25

Inch to Metric (mm) → Inch × 25.4
Metric (mm) to Inch → Metric ÷ 25.4 or Metric × 0.03937

Special / Custom Sizes on request

JBS

Tool Shank Dimensions For JBS

JBS shank

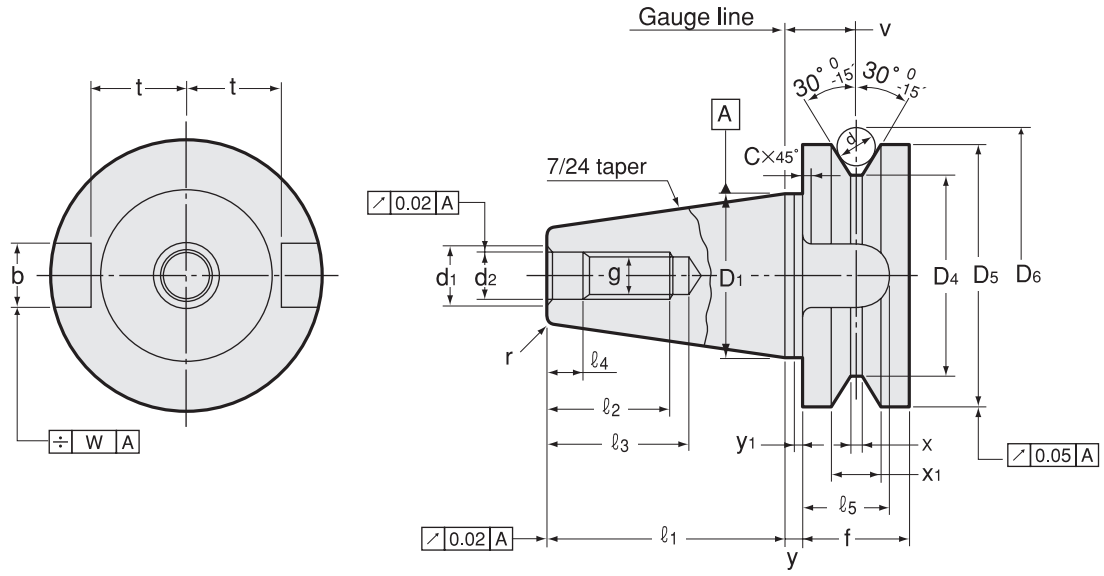

Unit : Metric

Model	Shank part			Thread part						Tenon part				
	D1	ℓ 1 ±0.151	r Max	d1	d2 H8	g H6	ℓ 2 Min	ℓ 3 Min	ℓ 4 $^{+0.5}_{0}$	b H12	ℓ 5 Min	t $^{0}_{-0.2}$	W	C Max
5T	12.700	17.5	0.3	5.5	4.5	M4	12	16	5	6.5	8.0	6.5	0.1	0.3
10T	15.875	22	0.3	6.5	5.5	M5	13	18	5	6.5	8.0	8.2	0.1	0.3
15T	19.050	27	0.5	7.5	6.5	M6	15	21	5	8.1	9.5	9.8	0.1	0.3
20T	22.225	33	0.5	9.5	8.5	M8	18	26	6	8.1	9.5	11.4	0.1	0.3
25T	25.400	40	0.5	9.5	8.5	M8	18	26	6	9.6	11.0	13.0	0.1	0.3

Unit : Metric

Model	Flange part									
	D4	D5 h8	f	v ± 0.1	X	X1 $^{+0.1}_{0}$	y ± 0.4	y1 $^{0}_{-0.4}$	d	D6
5T	15	20	10	6.0	2.0	4	1.0	1.0	4	25.072
10T	18	23	10	6.0	2.0	4	1.0	1.0	4	28.072
15T	21	27	11	7.0	2.5	5	1.5	1.5	5	33.340
20T	24	30	11	7.0	2.5	5	1.5	1.5	5	36.340
25T	28	35	13	8.5	3.0	6	2.0	2.0	6	42.608

Inch to Metric (mm) → Inch × 25.4
Metric (mm) to Inch → Metric ÷ 25.4 or Metric × 0.03937

Special / Custom Sizes on request

JBS shank

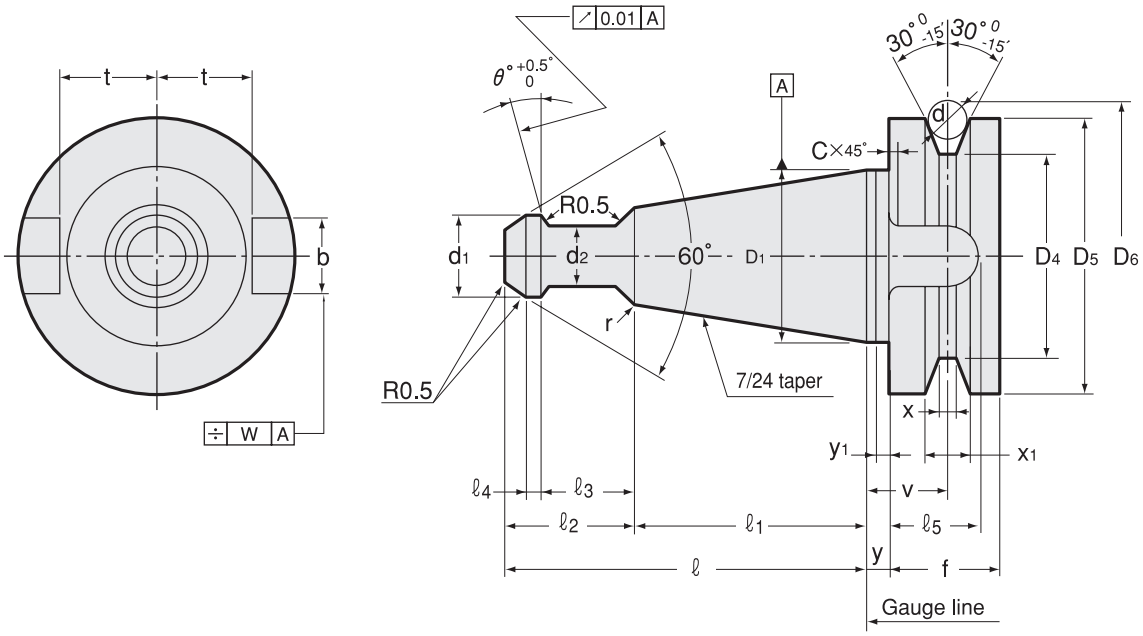

Unit : Metric

Model	Shank part				Grip part							
	D1	ℓ 1 ±0.15	r Max	ℓ +0.05 -0.15	d1 0 -0.1	d2 0 -0.1	r1	ℓ 2 0 -0.1	ℓ 3 0 -0.1	ℓ 4	θ 1形	θ 2形
5TP	12.700	19.5	0.3	28.5	5.0	3	1.0	9.0	6.5	1.0	15° +0.5° 0°	0° +0.5° 0°
10TP	15.875	24.5	0.3	35.0	6.0	4	1.0	10.5	7.5	1.3	15° +0.5° 0°	0° +0.5° 0°
15TP	19.050	30.0	0.5	42.0	7.0	5	1.5	12.0	8.5	1.5	15° +0.5° 0°	0° +0.5° 0°
20TP	22.225	36.5	0.5	50.5	8.5	6	1.5	14.0	10.0	1.8	15° +0.5° 0°	0° +0.5° 0°
25TP	25.400	44.0	0.5	60.0	10.0	7	1.5	16.0	11.5	2.0	15° +0.5° 0°	0° +0.5° 0°

Unit : Metric

Model	Tenon part					Flange part									
	b H12	ℓ 5 Min	t 0 -0.2	W	C Max	D4	D5 h8	f	v ±0.1	X	X1 +0.1 0	y ±0.4	y1 0 -0.2	d	D6
5TP	6.5	8.0	6.5	0.1	0.3	15	20	10	6.0	2.0	4	1.0	1.0	4	25.072
10TP	6.5	8.0	8.2	0.1	0.3	18	23	10	6.0	2.0	4	1.0	1.0	4	28.072
15TP	8.1	9.5	9.8	0.1	0.3	21	27	11	7.0	2.5	5	1.5	1.5	5	33.340
20TP	8.1	9.5	11.4	0.1	0.3	24	30	11	7.0	2.5	5	1.5	1.5	5	36.340
25TP	9.6	11.0	13.0	0.1	0.3	28	35	13	8.5	3.0	6	2.0	2.0	6	42.608

Inch to Metric (mm) → Inch × 25.4
Metric (mm) to Inch → Metric ÷ 25.4 or Metric × 0.03937

Special / Custom Sizes on request

CAT

CAT TOOLING SYSTEM

CT·S

Super tite-lock Milling Chuck

● Slim design milling chuck. Specially designed slits enable heavy endmilling.

Type 1

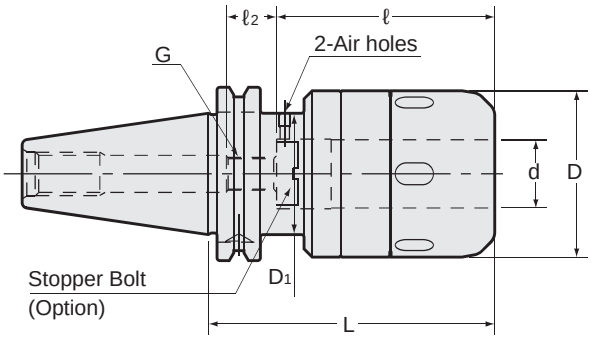

Type 2

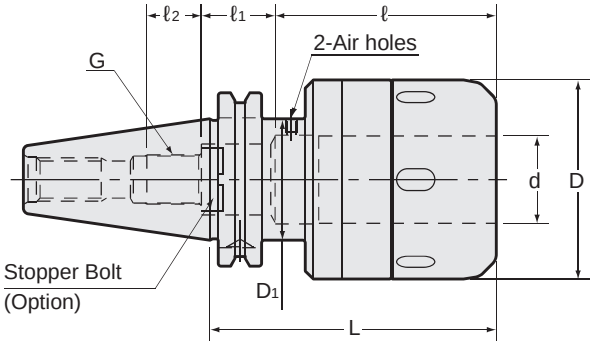

Caution

Please rotate the clamping ring counterclockwise more than 360 degrees after a cutting tool is removed.

Inch Sizes

Unit : Inch

Code	Model	Type	d	D	D1	L	ℓ	ℓ1	ℓ2	G P=1.0	Kg	Spanner
01910010424090	CAT40 -CT0750S - 90	1	0.750	2.047	1.750	3.543	3.150	—	0.591	M12	1.7	
01910010424105	-105	1	0.750	2.047	1.750	4.134	3.150	—	0.591	M12	1.9	HS-2-20
01910010424120	-120	1	0.750	2.047	1.750	4.724	3.150	—	0.591	M12	2.1	
01910010432105	CAT40 -CT1000S -105	1	1.000	2.402	1.750	4.134	3.150	—	0.591	M12	2.2	
01910010432120	-120	1	1.000	2.402	1.750	4.724	3.150	—	0.591	M12	2.5	HS-2.5-25
01910010432135	-135	1	1.000	2.402	1.750	5.315	3.150	—	0.591	M12	2.8	
01910010440105	CAT40 -CT1250S -105	2	1.250	2.874	1.750	4.134	3.346	0.906	0.787	M18	2.5	
01910010440120	-120	2	1.250	2.874	1.750	4.724	3.346	0.906	0.787	M18	3.0	HS-3-32
01910010440135	-135	2	1.250	2.874	1.750	5.315	4.724	—	0.787	M18	3.4	
01910010524090	CAT50 -CT0750S -90	1	0.750	2.047	2.750	3.543	3.150	—	0.591	M12	3.7	
01910010524105	-105	1	0.750	2.047	2.750	4.134	3.150	—	0.591	M12	3.9	HS-2-20
01910010524135	-135	1	0.750	2.047	2.750	5.315	3.150	—	0.591	M12	4.3	
01910010532105	CAT50 -CT1000S -105	1	1.000	2.402	2.750	4.134	3.150	—	0.591	M12	4.2	
01910010532135	-135	1	1.000	2.402	2.750	5.315	3.150	—	0.591	M12	4.8	HS-2.5-25
01910010532165	-165	1	1.000	2.402	2.750	6.496	3.150	—	0.591	M12	5.3	
01910010540095	CAT50 -CT1250S -95	1	1.250	2.874	2.750	3.740	4.724	—	0.787	M18	4.2	
01910010540105	-105	1	1.250	2.874	2.750	4.134	4.724	—	0.787	M18	4.5	
01910010540120	-120	1	1.250	2.874	2.750	4.724	4.724	—	0.787	M18	4.9	HS-3-32
01910010540135	-135	1	1.250	2.874	2.750	5.315	4.724	—	0.787	M18	5.4	
01910010540150	-150	1	1.250	2.874	2.750	5.906	4.724	—	0.787	M18	0.0	
01910010540165	-165	1	1.250	2.874	2.750	6.496	4.724	—	0.787	M18	6.3	
01910010564105	CAT50 -CT2000S -105	1	2.000	4.134	2.750	4.134	3.937	—	0.787	M18	5.9	
01910010564120	-120	1	2.000	4.134	2.750	4.724	3.937	—	0.787	M18	6.9	
01910010564135	-135	1	2.000	4.134	2.750	5.315	3.937	—	0.787	M18	7.8	HS-4V
01910010564150	-150	1	2.000	4.134	2.750	5.906	3.937	—	0.787	M18	0.0	
01910010564165	-165	1	2.000	4.134	2.750	6.496	3.937	—	0.787	M18	9.7	

1.Use 2pcs. of M4 × 5（S）hex. screw to close air holes on the holder when internal coolant is used.
2.When ordering, indicate number of spanners required. “No charge” spanners are limited to number of milling chucks on order.
3.Tolerance of cutting tool shank must be h7.

Ordering Example

CAT40 - CT 0750 S - 90

CAT40: Shank size; 0750: I.D. (d); 90: Projection length (L)

Inch to Metric (mm) → Inch × 25.4
Metric (mm) to Inch → Metric ÷ 25.4 or Metric × 0.03937

Special / Custom Sizes on request

Metric Sizes

Unit : Inch

Code	Model	Type	d (mm)	D	D1	L	ℓ	ℓ1	ℓ2	G P=1.0	Kg	Spanner
01910000416090	CAT40 -CT16S - 90	1	16	1.772	1.750	3.543	2.559	—	0.787	M10	1.5	HS-1-16
01910000420090	CAT40 -CT20S - 90	1	20	2.047	1.750	3.543	3.150	—	0.591	M12	1.7	HS-2-20
01910000420105	-105	1	20	2.047	1.750	4.134	3.150	—	0.591	M12	1.9	
01910000420120	-120	1	20	2.047	1.750	4.724	3.150	—	0.591	M12	2.1	
01910000425105	CAT40 -CT25S -105	1	25	2.402	1.750	4.134	3.150	—	0.591	M12	2.2	HS-2.5-25
01910000425120	-120	1	25	2.402	1.750	4.724	3.150	—	0.591	M12	2.5	
01910000425135	-135	1	25	2.402	1.750	5.315	3.150	—	0.591	M12	2.8	
01910000432105	CAT40 -CT32S -105	2	32	2.874	1.750	4.134	3.346	0.906	0.787	M18	2.5	HS-3-32
01910000432120	-120	2	32	2.874	1.750	4.724	3.346	0.906	0.787	M18	3.0	
01910000432135	-135	2	32	2.874	1.750	5.315	4.724	—	0.787	M18	3.4	
01910000516090	CAT50 -CT16S -90	1	16	1.772	2.750	3.543	2.559	—	0.787	M10	-	HS-1-16
01910000516105	-105	1	16	1.772	2.750	4.134	2.559	—	0.787	M10	3.7	
01910000520090	CAT50 -CT20S -90	1	20	2.047	2.750	3.543	3.150	—	0.591	M12	-	HS-2-20
01910000520105	-105	1	20	2.047	2.750	4.134	3.150	—	0.591	M12	3.9	
01910000520135	-135	1	20	2.047	2.750	5.315	3.150	—	0.591	M12	4.3	
01910000525105	CAT50 -CT25S -105	1	25	2.402	2.750	4.134	3.150	—	0.591	M12	4.2	HS-2.5-25
01910000525135	-135	1	25	2.402	2.750	5.315	3.150	—	0.591	M12	4.8	
01910000525165	-165	1	25	2.402	2.750	6.496	3.150	—	0.591	M12	5.3	
01910000532095	CAT50 -CT32S -95	1	32	2.874	2.750	3.740	4.724	—	0.787	M18	4.2	HS-3-32
01910000532105	-105	1	32	2.874	2.750	4.134	4.724	—	0.787	M18	4.5	
01910000532120	-120	1	32	2.874	2.750	4.724	4.724	—	0.787	M18	4.9	
01910000532135	-135	1	32	2.874	2.750	5.315	4.724	—	0.787	M18	5.4	
01910000532150	-150	1	32	2.874	2.750	5.906	4.724	—	0.787	M18	5.8	
01910000532165	-165	1	32	2.874	2.750	6.496	4.724	—	0.787	M18	6.3	
01910000542105	CAT50 -CT42S -105	1	42	3.465	2.750	4.134	4.724	—	0.787	M18	5.0	HS-4-42
01910000542120	-120	1	42	3.465	2.750	4.724	4.724	—	0.787	M18	5.6	
01910000542135	-135	1	42	3.465	2.750	5.315	4.724	—	0.787	M18	6.3	
01910000542150	-150	1	42	3.465	2.750	5.906	4.724	—	0.787	M18	6.9	
01910000542165	-165	1	42	3.465	2.750	6.496	4.724	—	0.787	M18	7.6	

1.Use 2pcs. of M4 × 5（S） hex. screw to close air holes on the holder when internal coolant is used.
2.When ordering, indicate number of spanners required. “No charge” spanners are limited to number of milling chucks on order.
3.Tolerance of cutting tool shank must be h7.

Ordering Example

CAT40 - CT 16 S - 90

- CAT40: Shank size
- 16: I.D. (d)
- 90: Projection length (L)

Spanner

P. 069



Accessories

Stopper Bolt	Straight Collet		Morse Taper Adapter		Jacobs Adapter	
BL (P.068)	MC (P.066)	MCA (P.067)	MA (P.068)	MAB (P.068)	JA (P.069)	JAB (P.069)

Min. chucking length

Without MC collet

I.D.of Milling Chuck	Min. chucking length
16、20	40
25、32、42	50

With MC collet

Collet I.D.	Min. chucking length	
	MC	MC-C、MC-OH
6、8	30	30
10、12	40	40
16、20	45	45
25	50	50
32	50	60

CT·S-E

Super Tite-Lock Milling Chuck (High-Balanced Type)

● Slim design milling chuck. Specially designed slits enables heavy endmilling. (High balanced type)

Type 1

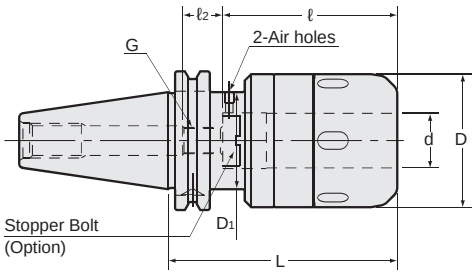

Type 2

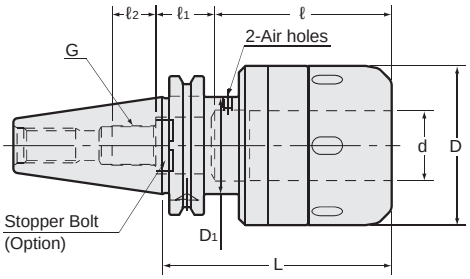

Caution

Please rotate the clamping ring counterclockwise more than 360 degrees after a cutting tool is removed.

Inch Sizes

Unit : Inch

Code	Model			Type	d	D	D1	L	l	l1	l2	G P=1.0
1910 11424090	CAT40	-CT0750S	- 90E	1	0.750	2.047	1.750	3.543	3.150	—	0.591	M12
1910 11424105			-105E	1	0.750	2.047	1.750	4.134	3.150	—	0.591	M12
1910 11424120			-120E	1	0.750	2.047	1.750	4.724	3.150	—	0.591	M12
1910 11432105	CAT40	-CT1000S	-105E	1	1.000	2.402	1.750	4.134	3.150	—	0.591	M12
1910 11432120			-120E	1	1.000	2.402	1.750	4.724	3.150	—	0.591	M12
1910 11432135			-135E	1	1.000	2.402	1.750	5.315	3.150	—	0.591	M12
1910 11440105	CAT40	-CT1250S	-105E	2	1.250	2.874	1.750	4.134	3.346	0.906	0.787	M18
1910 11440120			-120E	2	1.250	2.874	1.750	4.724	3.346	0.906	0.787	M18
1910 11440135			-135E	2	1.250	2.874	1.750	5.315	4.724	—	0.787	M18
1910 11524090	CAT50	-CT0750S	- 90E	1	0.750	2.047	2.750	3.543	3.150	—	0.591	M12
1910 11524105			-105E	1	0.750	2.047	2.750	4.134	3.150	—	0.591	M12
1910 11524135			-135E	1	0.750	2.047	2.750	5.315	3.150	—	0.591	M12
1910 11532105	CAT50	-CT1000S	-105E	1	1.000	2.402	2.750	4.134	3.150	—	0.591	M12
1910 11532135			-135E	1	1.000	2.402	2.750	5.315	3.150	—	0.591	M12
1910 11532165			-165E	1	1.000	2.402	2.750	6.496	3.150	—	0.591	M12
1910 11540095	CAT50	-CT1250S	- 95E	1	1.250	2.874	2.750	3.740	4.724	—	0.787	M18
1910 11540105			-105E	1	1.250	2.874	2.750	4.134	4.724	—	0.787	M18
1910 11540120			-120E	1	1.250	2.874	2.750	4.724	4.724	—	0.787	M18
1910 11540135			-135E	1	1.250	2.874	2.750	5.315	4.724	—	0.787	M18
1910 11540150			-150E	1	1.250	2.874	2.750	5.906	4.724	—	0.787	M18
1910 11540165			-165E	1	1.250	2.874	2.750	6.496	4.724	—	0.787	M18
1910 11564105	CAT50	-CT2000S	-105E	1	2.000	4.134	2.750	4.134	3.937	—	0.787	M18
1910 11564120			-120E	1	2.000	4.134	2.750	4.724	3.937	—	0.787	M18
1910 11564135			-135E	1	2.000	4.134	2.750	5.315	3.937	—	0.787	M18
1910 11564150			-150E	1	2.000	4.134	2.750	5.906	3.937	—	0.787	M18
1910 11564165			-165E	1	2.000	4.134	2.750	6.496	3.937	—	0.787	M18

1.Use 2pcs. of M4 × 5（S）hex. screw to close air holes on the holder when internal coolant is used.

2.When ordering, indicate number of spanners required. “No charge” spanners are limited to number of milling chucks on order.

3.Tolerance of cutting tool shank must be h7.

Ordering Example

CAT40 - CT 0750 S - 90 E

Shank size | I.D. (d) | Projection length (L)

Spanner

P. 069



Accessories

Stopper Bolt	Straight Collet		Morse Taper Adapter		Jacobs Adapter	
BL (P.068)	MC (P.066)	MCA (P.067)	MA (P.068)	MAB (P.068)	JA (P.069)	JAB (P.069)

Min. chucking length

Direct Chucking (without MC Collet)

Model	Min. chucking length
CT0750S	40mm
CT1000S, CT1250S CT2000S	50mm

With MC Collet

Collet I.D.	Min. chucking length	
	MC	MC-C、MC-OH
1/4, 5/16	30mm	30mm
3/8, 1/2	40mm	40mm
5/8, 3/4, 7/8	45mm	45mm
1	50mm	50mm
1-1/4	50mm	60mm
1-1/2	50mm	60mm

Inch to Metric (mm) → Inch × 25.4
Metric (mm) to Inch → Metric ÷ 25.4 or Metric × 0.03937

Special / Custom Sizes on request

MEMO

HDC·A

High-Precision Collet Holder

● Suitable for drilling, reaming and finish endmilling.

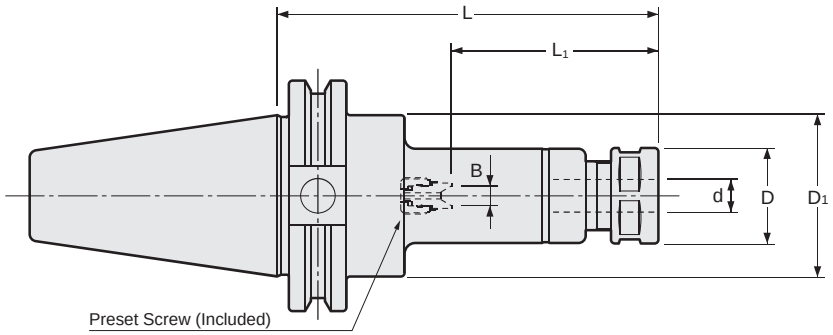

Unit : Inch

Code	Model	d	L	L1	B	D	D1	kg	Preset Screw	Nut	Collet	Spanner
1990 10407075	CAT40 -HDC07A -75	0.020-0.276	2.953	0.866-1.654	0.0-0.157	0.906	1.750		HDS-07	HDP-07A	FDC-07	S-0
1990 10407090	-90	0.020-0.276	3.543	0.866-1.654	0.0-0.157	0.906	1.750					
1990 10407105	-105	0.020-0.276	4.134	0.866-1.654	0.0-0.157	0.906	1.750					
1990 10409090	CAT40 -HDC09A -90	0.098-0.354	3.543	1.063-2.126	0.0-0.157	1.024	1.750		HDS-09	HDP-09	FDC-09	S-1L
1990 10409105	-105	0.098-0.354	4.134	1.063-2.126	0.0-0.157	1.024	1.750					
1990 10409120	-120	0.098-0.354	4.724	1.063-2.126	0.0-0.157	1.024	1.750					
1990 10409135	-135	0.098-0.354	5.315	1.063-2.126	0.0-0.157	1.024	1.750					
1990 10409165	-165	0.098-0.354	6.496	1.063-2.126	0.0-0.157	1.024	1.750					
1990 10412090	CAT40 -HDC12A -90	0.098-0.472	3.543	1.339-2.598	0.0-0.236	1.260	1.750		HDS-12	HDP-12	FDC-12	S-3L
1990 10412105	-105	0.098-0.472	4.134	1.339-2.598	0.0-0.236	1.260	1.750					
1990 10412120	-120	0.098-0.472	4.724	1.339-2.598	0.0-0.236	1.260	1.750					
1990 10412135	-135	0.098-0.472	5.315	1.339-2.598	0.0-0.236	1.260	1.750					
1990 10412165	-165	0.098-0.472	6.496	1.339-2.598	0.0-0.236	1.260	1.750					
1990 10412195	-195	0.098-0.472	7.677	1.339-2.598	0.0-0.236	1.260	1.750					
1990 10416090	CAT40 -HDC16A -90	0.138-0.630	3.543	1.575-3.071	0.0-0.315	1.417	1.750		HDS-16	HDP-16	FDC-16	S-4L
1990 10416105	-105	0.138-0.630	4.134	1.575-3.071	0.0-0.315	1.417	1.750					
1990 10416120	-120	0.138-0.630	4.724	1.575-3.071	0.0-0.315	1.417	1.750					
1990 10416135	-135	0.138-0.630	5.315	1.575-3.071	0.0-0.315	1.417	1.750					
1990 10416165	-165	0.138-0.630	6.496	1.575-3.071	0.0-0.315	1.417	1.750					
1990 10416195	-195	0.138-0.630	7.677	1.575-3.071	0.0-0.315	1.417	1.750					
1990 10422105	CAT40 -HDC22A -105	0.138-0.866	4.134	1.929-3.898	0.0-0.394	1.811	1.750		HDS-22	HDP-22	FDC-22	S-5L
1990 10422120	-120	0.138-0.866	4.724	1.929-3.898	0.0-0.394	1.811	1.750					
1990 10422135	-135	0.138-0.866	5.315	1.929-3.898	0.0-0.394	1.811	1.750					
1990 10422165	-165	0.138-0.866	6.496	1.929-3.898	0.0-0.394	1.811	1.750					
1990 10422195	-195	0.138-0.866	7.677	1.929-3.898	0.0-0.394	1.811	1.750					
1990 10507090	CAT50 -HDC07A -90	0.020-0.276	3.543	0.866-1.654	0.0-0.157	0.906	2.750		HDS-07	HDP-07A	FDC-07	S-0
1990 10507105	-105	0.020-0.276	4.134	0.866-1.654	0.0-0.157	0.906	2.750					
1990 10507120	-120	0.020-0.276	4.724	0.866-1.654	0.0-0.157	0.906	2.750	3.2				
1990 10507135	-135	0.020-0.276	5.315	0.866-1.654	0.0-0.157	0.906	2.750	3.2				
1990 10507165	-165	0.020-0.276	6.496	0.866-1.654	0.0-0.157	0.906	2.750					
1990 10507195	-195	0.020-0.276	7.677	0.866-1.654	0.0-0.157	0.906	2.750					
1990 10509090	CAT50 -HDC09A -90	0.098-0.354	3.543	1.063-2.126	0.0-0.157	1.024	2.750		HDS-09	HDP-09	FDC-09	S-1L
1990 10509105	-105	0.098-0.354	4.134	1.063-2.126	0.0-0.157	1.024	2.750	3.2				
1990 10509120	-120	0.098-0.354	4.724	1.063-2.126	0.0-0.157	1.024	2.750	3.2				
1990 10509135	-135	0.098-0.354	5.315	1.063-2.126	0.0-0.157	1.024	2.750	3.3				
1990 10509165	-165	0.098-0.354	6.496	1.063-2.126	0.0-0.157	1.024	2.750					
1990 10509195	-195	0.098-0.354	7.677	1.063-2.126	0.0-0.157	1.024	2.750					
1990 10509225	-225	0.098-0.354	8.858	1.063-2.126	0.0-0.157	1.024	2.750					
1990 10509255	-255	0.098-0.354	10.039	1.063-2.126	0.0-0.157	1.024	2.750					

Inch to Metric (mm) → Inch × 25.4
Metric (mm) to Inch → Metric ÷ 25.4 or Metric × 0.03937

Special / Custom Sizes on request

Unit : Inch

Code	Model	d	L	L1	B	D	D1	kg	Preset Screw	Nut	Collet	Spanner
1990 10512090	CAT50 -HDC12A -90	0.098-0.472	3.543	1.339-2.598	0.0-0.236	1.260	2.750	3.3	HDS-12	HDP-12	FDC-12	S-3L
1990 10512105	-105	0.098-0.472	4.134	1.339-2.598	0.0-0.236	1.260	2.750	3.3				
1990 10512120	-120	0.098-0.472	4.724	1.339-2.598	0.0-0.236	1.260	2.750	3.4				
1990 10512135	-135	0.098-0.472	5.315	1.339-2.598	0.0-0.236	1.260	2.750	3.4				
1990 10512165	-165	0.098-0.472	6.496	1.339-2.598	0.0-0.236	1.260	2.750					
1990 10512195	-195	0.098-0.472	7.677	1.339-2.598	0.0-0.236	1.260	2.750	3.7				
1990 10512225	-225	0.098-0.472	8.858	1.339-2.598	0.0-0.236	1.260	2.750					
1990 10512255	-255	0.098-0.472	10.039	1.339-2.598	0.0-0.236	1.260	2.750					
1990 10516090	CAT50 -HDC16A -90	0.138-0.630	3.543	1.575-3.071	0.0-0.315	1.417	2.750	3.3	HDS-16	HDP-16	FDC-16	S-4L
1990 10516105	-105	0.138-0.630	4.134	1.575-3.071	0.0-0.315	1.417	2.750	3.4				
1990 10516120	-120	0.138-0.630	4.724	1.575-3.071	0.0-0.315	1.417	2.750	3.5				
1990 10516135	-135	0.138-0.630	5.315	1.575-3.071	0.0-0.315	1.417	2.750	3.5				
1990 10516165	-165	0.138-0.630	6.496	1.575-3.071	0.0-0.315	1.417	2.750	3.7				
1990 10516195	-195	0.138-0.630	7.677	1.575-3.071	0.0-0.315	1.417	2.750	3.9				
1990 10516225	-225	0.138-0.630	8.858	1.575-3.071	0.0-0.315	1.417	2.750	4.1				
1990 10516255	-255	0.138-0.630	10.039	1.575-3.071	0.0-0.315	1.417	2.750	4.3				
1990 10522105	CAT50 -HDC22A -105	0.138-0.866	4.134	1.929-3.898	0.0-0.394	1.811	2.750	3.5	HDS-22	HDP-22	FDC-22	S-5L
1990 10522120	-120	0.138-0.866	4.724	1.929-3.898	0.0-0.394	1.811	2.750	3.7				
1990 10522135	-135	0.138-0.866	5.315	1.929-3.898	0.0-0.394	1.811	2.750	3.8				
1990 10522150	-150	0.138-0.866	5.906	1.929-3.898	0.0-0.394	1.811	2.750	4				
1990 10522165	-165	0.138-0.866	6.496	1.929-3.898	0.0-0.394	1.811	2.750	4.1				
1990 10522195	-195	0.138-0.866	7.677	1.929-3.898	0.0-0.394	1.811	2.750	4.4				
1990 10522225	-225	0.138-0.866	8.858	1.929-3.898	0.0-0.394	1.811	2.750					
1990 10522255	-255	0.138-0.866	10.039	1.929-3.898	0.0-0.394	1.811	2.750					

1.Collet, spanner, hexagon head preset screw, preset screw for semi-dry processing are sold separately. Standard preset screw is included.
2.Refer to P.092 for minimum tool insertion length in case of using our coolant collets (OH,C or MS).
3.L1 indicates dimension when using with a preset screw.
4.See P.499 for standard Tightening Torque.
5.Standard preset screw is included.

Collet
P. 086 - 089



Spanner
P.095



Preset screw
P.094



Ordering Example

CAT40 - HDC 09 A - 105

CAT40: Shank size
09: Max. collet I.D.
105: Projection length (L)

SDM

Drill Holder With Easy Tool Length Adjustment

● Projection length of the cutting tool can be adjusted by simply turning circumference of the holder.

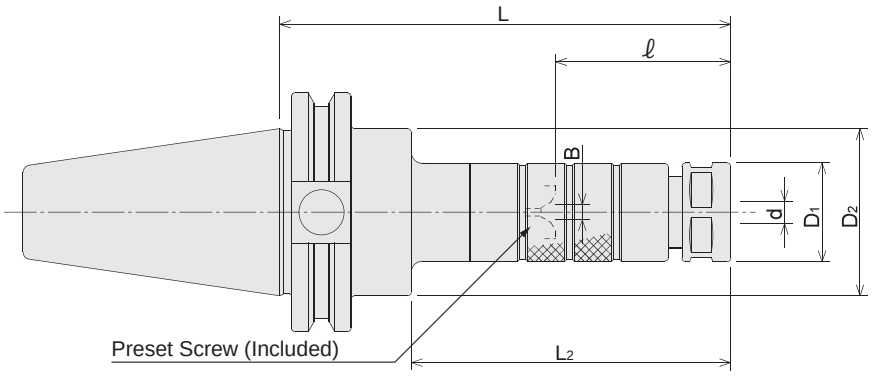

Unit : Inch

Code	Model	d (mm)	L	L2	ℓ	B (mm)	D1	D2	kg	Nut	Collet	Spanner
—	**CAT40 -SDM07 -90 (*1)**	0.5-7.0	3.543	2.165	1.142-1.535	0-4	0.906	1.750		HDP-07A		
1870 00407105	**-105**	0.5-7.0	4.134	2.756	1.142-2.126	0-4	0.906	1.750	1.1	HDP-07A		
1870 00407120	**-120**	0.5-7.0	4.724	3.346	1.142-2.126	0-4	0.906	1.750	1.2	HDP-07A	FDC-07	S-0
1870 00407135	**-135**	0.5-7.0	5.315	3.937	1.142-2.126	0-4	0.906	1.750	11.9	HDP-07A		
—	**-150 (*1)**	0.5-7.0	5.906	4.528	1.142-2.126	0-4	0.906	1.750		HDP-07A		
—	**CAT40 -SDM09 -90 (*1)**	2.5-9.0	3.543	2.165	1.102-1.496	0-4	1.024	1.750		HDP-09		
1870 00409105	**-105**	2.5-9.0	4.134	2.756	1.102-2.087	0-4	1.024	1.750	1.2	HDP-09		
1870 00409120	**-120**	2.5-9.0	4.724	3.346	1.102-2.087	0-4	1.024	1.750	1.2	HDP-09	FDC-09	S-1L
1870 00409135	**-135**	2.5-9.0	5.315	3.937	1.102-2.087	0-4	1.024	1.750	1.3	HDP-09		
—	**-150 (*1)**	2.5-9.0	5.906	4.528	1.102-2.087	0-4	1.024	1.750		HDP-09		
—	**-180 (*1)**	2.5-9.0	7.087	5.709	1.102-2.087	0-4	1.024	1.750		HDP-09		
1870 00412105	**CAT40 -SDM12 -105**	2.5-12.0	4.134	2.756	1.339-2.323	0-5	1.260	1.750	1.3	HDP-12		
1870 00412120	**-120**	2.5-12.0	4.724	3.346	1.339-2.323	0-5	1.260	1.750	1.3	HDP-12		
1870 00412135	**-135**	2.5-12.0	5.315	3.937	1.339-2.323	0-5	1.260	1.750	1.4	HDP-12	FDC-12	S-3L
—	**-150 (*1)**	2.5-12.0	5.906	4.528	1.339-2.323	0-5	1.260	1.750		HDP-12		
—	**-180 (*1)**	2.5-12.0	7.087	5.709	1.339-2.323	0-5	1.260	1.750		HDP-12		
1870 00416105	**CAT40 -SDM16 -105**	3.5-16.0	4.134	2.756	1.575-1.969	0-6	1.417	1.750	1.3	HDP-16		
1870 00416120	**-120**	3.5-16.0	4.724	3.346	1.575-2.559	0-6	1.417	1.750	1.4	HDP-16		
1870 00416135	**-135**	3.5-16.0	5.315	3.937	1.575-2.559	0-6	1.417	1.750	1.5	HDP-16	FDC-16	S-4L
—	**-150 (*1)**	3.5-16.0	5.906	4.528	1.575-2.559	0-6	1.417	1.750		HDP-16		
—	**-180 (*1)**	3.5-16.0	7.087	5.709	1.575-2.559	0-6	1.417	1.750		HDP-16		
1870 00422120	**CAT40 -SDM22 -120**	3.5-22.0	4.724	3.346	1.890-2.283	0-8	1.811	1.750	1.6	HDP-22		
1870 00422135	**-135**	3.5-22.0	5.315	3.937	1.890-2.874	0-8	1.811	1.750	1.7	HDP-22	FDC-22	S-5L
1870 00422150	**-150**	3.5-22.0	5.906	4.528	1.890-2.874	0-8	1.811	1.750	1.9	HDP-22		
—	**-180 (*1)**	3.5-22.0	7.087	5.709	1.890-2.874	0-8	1.811	1.750		HDP-22		
—	**CAT50 -SDM07 -90 (*1)**	0.5-7.0	3.543	2.165	1.142-1.535	0-4	0.906	2.750		HDP-07A		
1870 00507105	**-105**	0.5-7.0	4.134	2.756	1.142-2.126	0-4	0.906	2.750		HDP-07A		
1870 00507120	**-120**	0.5-7.0	4.724	3.346	1.142-2.126	0-4	0.906	2.750		HDP-07A	FDC-07	S-0
1870 00507135	**-135**	0.5-7.0	5.315	3.937	1.142-2.126	0-4	0.906	2.750		HDP-07A		
—	**-150 (*1)**	0.5-7.0	5.906	4.528	1.142-2.126	0-4	0.906	2.750		HDP-07A		
—	**-165 (*1)**	0.5-7.0	6.496	5.118	1.142-2.126	0-4	0.906	2.750		HDP-07A		

1.Collet and spanner are sold separately.
2. ℓ is the dimension between the cap end and the preset screw top end.
3.See P.499 for standard Tightening Torque.
4.(*1) : SEMI-STANDARD

Inch to Metric (mm) → Inch × 25.4
Metric (mm) to Inch → Metric ÷ 25.4 or Metric × 0.03937

Special / Custom Sizes on request

Unit : Inch

Code	Model	d (mm)	L	L2	ℓ	B (mm)	D1	D2	kg	Nut	Collet	Spanner
—	**CAT50 -SDM09 -90 (*1)**	2.5-9.0	3.543	2.165	1.102-1.496	0-4	1.024	2.750		HDP-09	FDC-09	S-1L
1870 00509105	**-105**	2.5-9.0	4.134	2.756	1.102-2.087	0-4	1.024	2.750		HDP-09		
1870 00509120	**-120**	2.5-9.0	4.724	3.346	1.102-2.087	0-4	1.024	2.750		HDP-09		
1870 00509135	**-135**	2.5-9.0	5.315	3.937	1.102-2.087	0-4	1.024	2.750		HDP-09		
—	**-150 (*1)**	2.5-9.0	5.906	4.528	1.102-2.087	0-4	1.024	2.750		HDP-09		
—	**-180 (*1)**	2.5-9.0	7.087	5.709	1.102-2.087	0-4	1.024	2.750		HDP-09		
1870 00512105	**CAT50 -SDM12 -105**	2.5-12.0	4.134	2.756	1.339-1.732	0-5	1260	2.750		HDP-12	FDC-12	S-3L
1870 00512120	**-120**	2.5-12.0	4.724	3.346	1.339-2.323	0-5	1260	2.750		HDP-12		
1870 00512135	**-135**	2.5-12.0	5.315	3.937	1.339-2.323	0-5	1260	2.750		HDP-12		
—	**-150 (*1)**	2.5-12.0	5.906	4.528	1.339-2.323	0-5	1260	2.750		HDP-12		
—	**-180 (*1)**	2.5-12.0	7.087	5.709	1.339-2.323	0-5	1260	2.750		HDP-12		
1870 00516105	**CAT50 -SDM16 -105**	3.5-16.0	4.134	2.756	1.575-1.969	0-6	1.417	2.750		HDP-16	FDC-16	S-4L
1870 00516120	**-120**	3.5-16.0	4.724	3.346	1.575-2.559	0-6	1.417	2.750		HDP-16		
1870 00516135	**-135**	3.5-16.0	5.315	3.937	1.575-2.559	0-6	1.417	2.750		HDP-16		
1870 00516150	**-150**	3.5-16.0	5.906	4.528	1.575-2.559	0-6	1.417	2.750		HDP-16		
—	**-180 (*1)**	3.5-16.0	7.087	5.709	1.575-2.559	0-6	1.417	2.750		HDP-16		
1870 00522120	**CAT50 -SDM22 -120**	3.5-22.0	4.724	3.346	1.890-2.283	0-8	1.811	2.750		HDP-22	FDC-22	S-5L
1870 00522135	**-135**	3.5-22.0	5.315	3.937	1.890-2.874	0-8	1.811	2.750		HDP-22		
1870 00522150	**-150**	3.5-22.0	5.906	4.528	1.890-2.874	0-8	1.811	2.750		HDP-22		
1870 00522180	**-180**	3.5-22.0	7.087	5.709	1.890-2.874	0-8	1.811	2.750		HDP-22		
—	**-210 (*1)**	3.5-22.0	8.268	6.89	1.890-2.874	0-8	1.811	2.750		HDP-22		

1.Collet and spanner are sold separately.
2. ℓ is the dimension between the cap end and the preset screw top end.
3.See P.499 for standard Tightening Torque.
4.(*1) : SEMI-STANDARD

Collet
P.086 - 089



Spanner
P.095



Ordering Example

CAT40 - **SDM** **12** - **90**

- CAT40: Shank size
- 12: Max. collet I.D.
- 90: Projection length (L)

GDC·A

High-Precision Collet Holder (High-Balanced Type)

● Suitable for high speed rotation drilling, reaming, and finish endmilling.

Type 1

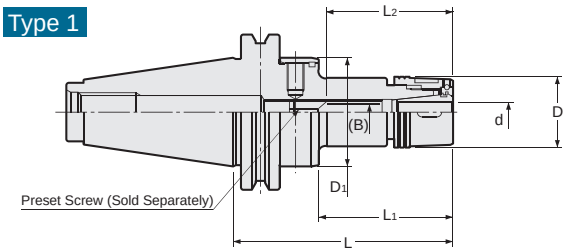

Type 2

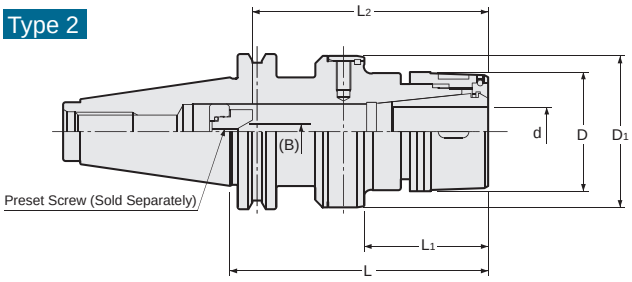

Unit : Inch

Code	Model	Type	d	L	L1	(B)	L2	D	D1	kg	Preset Screw	Nut	Collet	Spanner
1970 00407090	CAT40 -GDC07A -90	1	0.020 -0.276	3.543	2.165	0.0 -0.157	0.866 -1.772	0.906	1.750	1.1	HDS-07	HDP-07A	FDC-07AA	S-0
1970 00407120	-120	1	0.020 -0.276	4.724	3.346	0.0 -0.157	0.866 -1.772	0.906	1.750					
1970 00409090	CAT40 -GDC09A -90	1	0.098 -0.354	3.543	2.165	0.0 -0.157	1.063 -2.244	1.142	1.750	1.2	HDS-09	GDP-09	FDC-09AA	FK-0025
1970 00409120	-120	1	0.098 -0.354	4.724	3.346	0.0 -0.157	1.063 -2.244	1.142	1.750	1.3				
1970 00412105	CAT40 -GDC12A -105	1	0.098 -0.472	4.134	2.756	0.0 -0.197	1.299 -2.677	1.339	1.750		HDS-12	GDP-12	FDC-12AA	FK-0030
1970 00412135	-135	1	0.098 -0.472	5.315	3.937	0.0 -0.197	1.299 -2.677	1.339	1.750					
1970 00416105	CAT40 -GDC16A -105	1	0.138 -0.630	4.134	2.756	0.0 -0.236	1.496 -3.189	1.496	1.750	1.4	HDS-16	GDP-16	FDC-16AA	FK-0034
1970 00416135	-135	1	0.138 -0.630	5.315	3.937	0.0 -0.236	1.496 -3.189	1.496	1.750					
1970 00422105	CAT40 -GDC22A -105	2	0.138 -0.866	4.134	1.969	0.0 -0.315	1.850 -4.055	1.929	2.441		HDS-22	GDP-22	FDC-22AA	FK-0045
1970 00422135	-135	2	0.138 -0.866	5.315	3.150	0.0 -0.315	1.850 -4.055	1.929	2.441					
1970 00507105	CAT50 -GDC07A -105	1	0.020 -0.276	4.134	2.756	0.0 -0.157	0.866 -1.772	0.906	2.750		HDS-07	HDP-07A	FDC-07AA	S-0
1970 00507135	-135	1	0.020 -0.276	5.315	3.937	0.0 -0.157	0.866 -1.772	0.906	2.750					
1970 00509105	CAT50 -GDC09A -105	1	0.098 -0.354	4.134	2.756	0.0 -0.157	1.063 -2.244	1.142	2.750		HDS-09	GDP-09	FDC-09AA	FK-0025
1970 00509135	-135	1	0.098 -0.354	5.315	3.937	0.0 -0.157	1.063 -2.244	1.142	2.750					
1970 00512105	CAT50 -GDC12A -105	1	0.098 -0.472	4.134	2.756	0.0 -0.197	1.299 -2.677	1.339	2.750		HDS-12	GDP-12	FDC-12AA	FK-0030
1970 00512135	-135	1	0.098 -0.472	5.315	3.937	0.0 -0.197	1.299 -2.677	1.339	2.750					
1970 00516105	CAT50 -GDC16A -105	1	0.138 -0.630	4.134	2.756	0.0 -0.236	1.496 -3.189	1.496	2.750		HDS-16	GDP-16	FDC-16AA	FK-0034
1970 00516135	-135	1	0.138 -0.630	5.315	3.937	0.0 -0.236	1.496 -3.189	1.496	2.750	3.5				
1970 00522105	CAT50 -GDC22A -105	1	0.138 -0.866	4.134	2.756	0.0 -0.315	1.850 -4.055	1.929	2.750		HDS-22	GDP-22	FDC-22AA	FK-0045
1970 00522135	-135	1	0.138 -0.866	5.315	3.937	0.0 -0.315	1.850 -4.055	1.929	2.750					

1.Collet, preset screw and spanner are sold separately.
2.Always use "AA" class collet.
3.Refer to P.92 for minimum tool insertion length in case of using our coolant collets (OH,C or MS).
4.L2 indicates dimension when using with a preset screw.
5.See P.499 for standard Tightening Torque.

Collet P.086 - 089

Spanner P.095

Preset screw P.094

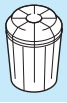





Ordering Example

CAT40 - GDC 09 A - 90

CAT40: Shank size; 09: Max. collet I.D.; 90: Projection length (L)

Inch to Metric (mm) → Inch × 25.4
Metric (mm) to Inch → Metric ÷ 25.4 or Metric × 0.03937

Special / Custom Sizes on request

MEMO

ERC

Collet Holder For Small Diameters

● For drilling in tight space.

Type 1

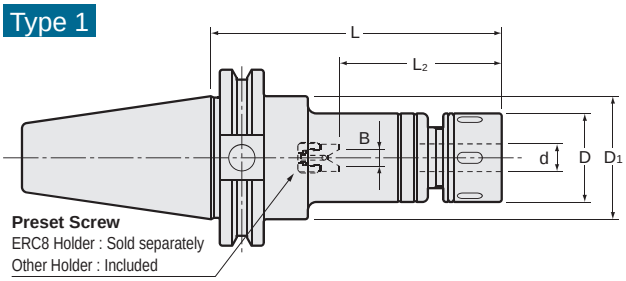

Preset Screw
ERC8 Holder : Sold separately
Other Holder : Included

Type 2

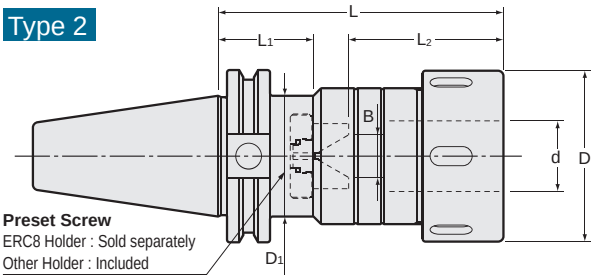

Preset Screw
ERC8 Holder : Sold separately
Other Holder : Included

Unit : Inch

Code	Model		Type	d	L	L1	B	L2	D	D1	kg	Preset Screw	Nut	Collet	Spanner
1980 00408075	CAT40 -ERC 8	-75	1	0.020-0.197	2.953	—	— (0~0.094)	1.299 (0.748~1.220)	0.472	1.750	1.0	—	ERP-8	ER8	S-8E
1980 00408105		-105	1	0.020-0.197	4.134	—	— (0~0.094)	1.299 (0.748~1.220)	0.472	1.750	1.1				
1980 00410075	CAT40 -ERC11S	-75	1	0.020-0.276	2.953	—	0.0-0.157	0.866-1.654	0.630	1.750	1.1	HDS07A-ES11	ERP-11S	ER11	S-11E
1980 00410105		-105	1	0.020-0.276	4.134	—	0.0-0.157	0.866-1.654	0.630	1.750	1.1				
1980 00411075	CAT40 -ERC11	-75	1	0.020-0.276	2.953	—	0.0-0.157	0.866-1.654	0.906	1.750	1.1		HDP-07A		S-0
1980 00411090		-90	1	0.020-0.276	3.543	—	0.0-0.157	0.866-1.654	0.906	1.750					
1980 00411105		-105	1	0.020-0.276	4.134	—	0.0-0.157	0.866-1.654	0.906	1.750	1.2				
1980 00416090	CAT40 -ERC16	-90	1	0.020-0.394	3.543	—	0.0-0.197	1.299-2.126	1.260	1.750	1.3	ES16	ERP-16	ER16	FK-0030
1980 00416105		-105	1	0.020-0.394	4.134	—	0.0-0.197	1.299-2.126	1.260	1.750	1.3				
1980 00416120		-120	1	0.020-0.394	4.724	—	0.0-0.197	1.299-2.126	1.260	1.750	1.4				
1980 00416135		-135	1	0.020-0.394	5.315	—	0.0-0.197	1.299-2.126	1.260	1.750	1.5				
1980 00416165		-165	1	0.020-0.394	6.496	—	0.0-0.197	1.299-2.126	1.260	1.750					
1980 00420090	CAT40 -ERC20	-90	1	0.020-0.512	3.543	—	0.0-0.236	1.496-2.638	1.378	1.750	1.3	HDS12A-ES20	ERP-20	ER20	FK-0034
1980 00420105		-105	1	0.020-0.512	4.134	—	0.0-0.236	1.496-2.638	1.378	1.750					
1980 00420120		-120	1	0.020-0.512	4.724	—	0.0-0.236	1.496-2.638	1.378	1.750					
1980 00420135		-135	1	0.020-0.512	5.315	—	0.0-0.236	1.496-2.638	1.378	1.750					
1980 00420165		-165	1	0.020-0.512	6.496	—	0.0-0.236	1.496-2.638	1.378	1.750					
1980 00420195		-195	1	0.020-0.512	7.677	—	0.0-0.236	1.496-2.638	1.378	1.750					
1980 00425090	CAT40 -ERC25	-90	1	0.020-0.630	3.543	—	0.0-0.315	1.693-3.150	1.654	1.750	1.4	HDS16A-ES25	ERP-25	ER25	HS-1-16
1980 00425105		-105	1	0.020-0.630	4.134	—	0.0-0.315	1.693-3.150	1.654	1.750	1.5				
1980 00425120		-120	1	0.020-0.630	4.724	—	0.0-0.315	1.693-3.150	1.654	1.750	1.7				
1980 00425135		-135	1	0.020-0.630	5.315	—	0.0-0.315	1.693-3.150	1.654	1.750					
1980 00425165		-165	1	0.020-0.630	6.496	—	0.0-0.315	1.693-3.150	1.654	1.750					
1980 00425195		-195	1	0.020-0.630	7.677	—	0.0-0.315	1.693-3.150	1.654	1.750					
1980 00432105	CAT40 -ERC32	-105	1	0.098-0.787	4.134	—	0.0-0.394	1.969-3.976	1.969	1.750	1.5	HDS22A-ES32	ERP-32	ER32	HS-2-20
1980 00432120		-120	1	0.098-0.787	4.724	—	0.0-0.394	1.969-3.976	1.969	1.750	1.6				
1980 00432135		-135	1	0.098-0.787	5.315	—	0.0-0.394	1.969-3.976	1.969	1.750	1.8				
1980 00432165		-165	1	0.098-0.787	6.496	—	0.0-0.394	1.969-3.976	1.969	1.750	2.1				
1980 00432195		-195	1	0.098-0.787	7.677	—	0.0-0.394	1.969-3.976	1.969	1.750	2.4				
1980 00440075	CAT40 -ERC40	-75	2	0.118-1.024	2.953	1.380	—	3.386	2.480	1.750	1.2	—	ERP-40	ER40	HS-2.5-25
1980 00440105		-105	2	0.118-1.024	4.134	1.380	0.0 0.138-0.551	2.362-3.504	2.480	1.750		ES40			
1980 00440150		-150	2	0.118-1.024	5.906	1.380	0.0 0.138-0.551	2.362-3.898	2.480	1.750					
1980 00440165		-165	2	0.118-1.024	6.496	1.380	0.0 0.138-0.551	2.362-3.898	2.480	1.750					
1980 00511090	CAT50 -ERC11	- 90	1	0.020-0.276	3.543	—	0.0-0.157	0.866-1.654	0.906	2.750		HDS07A-ES11	HDP-07A	ER11	S-0
1980 00511105		-105	1	0.020-0.276	4.134	—	0.0-0.157	0.866-1.654	0.906	2.750	3.2				
1980 00511120		-120	1	0.020-0.276	4.724	—	0.0-0.157	0.866-1.654	0.906	2.750					
1980 00511135		-135	1	0.020-0.276	5.315	—	0.0-0.157	0.866-1.654	0.906	2.750	3.2				
1980 00511165		-165	1	0.020-0.276	6.496	—	0.0-0.157	0.866-1.654	0.906	2.750					
1980 00511195		-195	1	0.020-0.276	7.677	—	0.0-0.157	0.866-1.654	0.906	2.750					

Inch to Metric (mm) → Inch × 25.4
Metric (mm) to Inch → Metric ÷ 25.4 or Metric × 0.03937

Special / Custom Sizes on request

Unit : Inch

Code	Model	Type	d	L	L1	B	L2	D	D1	kg	Preset Screw	Nut	Collet	Spanner
1980 00516090	CAT50 -ERC16 - 90	1	0.020-0.394	3.543	—	0.0-0.197	1.299-2.126	1.260	2.750	3.3	ES16	ERP-16	ER16	FK-0030
1980 00516105	-105	1	0.020-0.394	4.134	—	0.0-0.197	1.299-2.126	1.260	2.750	3.3				
1980 00516120	-120	1	0.020-0.394	4.724	—	0.0-0.197	1.299-2.126	1.260	2.750					
1980 00516135	-135	1	0.020-0.394	5.315	—	0.0-0.197	1.299-2.126	1.260	2.750	3.5				
1980 00516165	-165	1	0.020-0.394	6.496	—	0.0-0.197	1.299-2.126	1.260	2.750					
1980 00516195	-195	1	0.020-0.394	7.677	—	0.0-0.197	1.299-2.126	1.260	2.750					
1980 00516225	-225	1	0.020-0.394	8.858	—	0.0-0.197	1.299-2.126	1.260	2.750					
1980 00516255	-255	1	0.020-0.394	10.039	—	0.0-0.197	1.299-2.126	1.260	2.750					
1980 00520090	CAT50 -ERC20 - 90	1	0.020-0.512	3.543	—	0.0-0.236	1.496-2.638	1.378	2.750		HDS12A-ES20	ERP-20	ER20	FK-0034
1980 00520105	-105	1	0.020-0.512	4.134	—	0.0-0.236	1.496-2.638	1.378	2.750	3.4				
1980 00520120	-120	1	0.020-0.512	4.724	—	0.0-0.236	1.496-2.638	1.378	2.750	3.4				
1980 00520135	-135	1	0.020-0.512	5.315	—	0.0-0.236	1.496-2.638	1.378	2.750	3.5				
1980 00520165	-165	1	0.020-0.512	6.496	—	0.0-0.236	1.496-2.638	1.378	2.750	3.7				
1980 00520195	-195	1	0.020-0.512	7.677	—	0.0-0.236	1.496-2.638	1.378	2.750					
1980 00520225	-225	1	0.020-0.512	8.858	—	0.0-0.236	1.496-2.638	1.378	2.750					
1980 00520255	-255	1	0.020-0.512	10.039	—	0.0-0.236	1.496-2.638	1.378	2.750					
1980 00525090	CAT50 -ERC25 - 90	1	0.020-0.630	3.543	—	0.0-0.315	1.693-3.150	1.654	2.750		HDS16A-ES25	ERP-25	ER25	HS-1-16
1980 00525105	-105	1	0.020-0.630	4.134	—	0.0-0.315	1.693-3.150	1.654	2.750	3.5				
1980 00525120	-120	1	0.020-0.630	4.724	—	0.0-0.315	1.693-3.150	1.654	2.750	3.7				
1980 00525135	-135	1	0.020-0.630	5.315	—	0.0-0.315	1.693-3.150	1.654	2.750	3.8				
1980 00525165	-165	1	0.020-0.630	6.496	—	0.0-0.315	1.693-3.150	1.654	2.750	4				
1980 00525195	-195	1	0.020-0.630	7.677	—	0.0-0.315	1.693-3.150	1.654	2.750					
1980 00525225	-225	1	0.020-0.630	8.858	—	0.0-0.315	1.693-3.150	1.654	2.750					
1980 00525255	-255	1	0.020-0.630	10.039	—	0.0-0.315	1.693-3.150	1.654	2.750					
1980 00532105	CAT50 -ERC32 -105	1	0.098-0.787	4.134	—	0.0-0.394	1.969-3.976	1.969	2.750	3.7	HDS22A-ES32	ERP-32	ER32	HS-2-20
1980 00532120	-120	1	0.098-0.787	4.724	—	0.0-0.394	1.969-3.976	1.969	2.750	3.8				
1980 00532135	-135	1	0.098-0.787	5.315	—	0.0-0.394	1.969-3.976	1.969	2.750	2				
1980 00532150	-150	1	0.098-0.787	5.906	—	0.0-0.394	1.969-3.976	1.969	2.750					
1980 00532165	-165	1	0.098-0.787	6.496	—	0.0-0.394	1.969-3.976	1.969	2.750					
1980 00532195	-195	1	0.098-0.787	7.677	—	0.0-0.394	1.969-3.976	1.969	2.750					
1980 00532225	-225	1	0.098-0.787	8.858	—	0.0-0.394	1.969-3.976	1.969	2.750					
1980 00532255	-255	1	0.098-0.787	10.039	—	0.0-0.394	1.969-3.976	1.969	2.750					
1980 00540075	CAT50 -ERC40 -75	1	0.118-1.024	2.953	—	0.0 0.138-0.551	2.362-3.701	2.480	2.750		ES40	ERP-40	ER40	HS-2.5-25
1980 00540105	-105	1	0.118-1.024	4.134	—	0.0 0.138-0.551	2.362-3.898	2.480	2.750	3.9				
1980 00540165	-165	1	0.118-1.024	6.496	—	0.0 0.138-0.551	2.362-3.898	2.480	2.750	5.1				
1980 00550105	CAT50 -ERC50 -105	1	0.394-1.339	4.134	—	0.0 0.236-0.630	2.913-3.937	3.071	2.750		ES50	ERP-50	ER50	HS-4-42

1.Collet and spanner are sold separately.
2.ES8, a preset screw for ERC8, is sold separately. ERC11S includes a standard preset screw HDS-07A-ES11.
3." B " and " l2 " dimensions in brackets are for using ES8 preset screw.
4.Refer to P.092 for minimum tool insertion length in case of using our coolant collets.
5.See P.499 for standard Tightening Torque.

Collet
P. 090-091


Spanner
P. 095


Preset screw
P. 094


Ordering Example

CAT40 - ERC 8 - 105

CAT40: Shank size
8: Max. collet I.D.
105: Projection length (L)

HDZ

"R"Zero Holder

● Runout accuracy of the cutting edge can be adjusted as closely as to zero.

Type 1

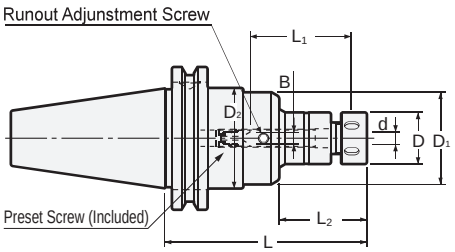

Type 2

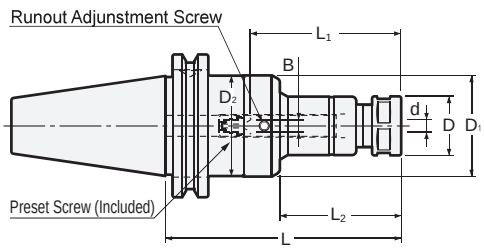

Type 3

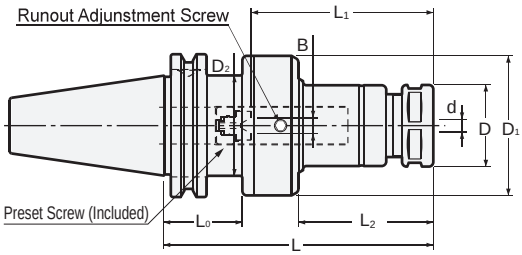

Unit : Inch

Code	Model	Type	d	L	L1	L2	B	D	D1	L0	D2	kg	Preset Screw	Nut	Spanner	Collet	Hex. Wrench (Size)
1960 00407090	**CAT40-HDZ07 -90**	1	0.020-0.276	3.543	0.866-1.772	1.535	0.0-0.157	0.906	1.614	—	1.750		HDS-07	HDP-07A	S-0	FDC-07	L-3T (3mm)
1960 00407105	**-105**	1	0.020-0.276	4.134	0.866-1.772	2.126	0.0-0.157	0.906	1.614	—	1.750						
1960 00409090	**CAT40-HDZ09 -90**	2	0.098-0.354	3.543	1.063-2.244	1.535	0.0-0.157	1.024	1.772	—	1.750		HDS-09	HDP-09	S-1L	FDC-09	
1960 00409105	**-105**	2	0.098-0.354	4.134	1.063-2.244	2.126	0.0-0.157	1.024	1.772	—	1.750						
1960 00409120	**-120**	2	0.098-0.354	4.724	1.063-2.244	2.717	0.0-0.157	1.024	1.772	—	1.750						
1960 00409135	**-135**	2	0.098-0.354	5.315	1.063-2.244	3.307	0.0-0.157	1.024	1.772	—	1.750						
1960 00409165	**-165**	2	0.098-0.354	6.496	1.063-2.244	4.488	0.0-0.157	1.024	1.772	—	1.750						
1960 00412105	**CAT40-HDZ12 -105**	3	0.098-0.472	4.134	1.299-2.677	1.772	0.0-0.197	1.260	2.205	1.378	1.750		HDS-12	HDP-12	S-3L	FDC-12	L-4T (4mm)
1960 00412120	**-120**	3	0.098-0.472	4.724	1.299-2.677	2.362	0.0-0.197	1.260	2.205	1.378	1.750						
1960 00412135	**-135**	3	0.098-0.472	5.315	1.299-2.677	2.953	0.0-0.197	1.260	2.205	1.378	1.750						
1960 00412165	**-165**	3	0.098-0.472	6.496	1.299-2.677	4.134	0.0-0.197	1.260	2.205	1.378	1.750						
1960 00412195	**-195**	3	0.098-0.472	7.677	1.299-2.677	5.315	0.0-0.197	1.260	2.205	1.378	1.750						
1960 00416105	**CAT40-HDZ16 -105**	3	0.138-0.630	4.134	1.496-3.189	1.772	0.0-0.236	1.417	2.441	1.378	1.750		HDS-16	HDP-16	S-4L	FDC-16	
1960 00416120	**-120**	3	0.138-0.630	4.724	1.496-3.189	2.362	0.0-0.236	1.417	2.441	1.378	1.750						
1960 00416135	**-135**	3	0.138-0.630	5.315	1.496-3.189	2.953	0.0-0.236	1.417	2.441	1.378	1.750						
1960 00416165	**-165**	3	0.138-0.630	6.496	1.496-3.189	4.134	0.0-0.236	1.417	2.441	1.378	1.750						
1960 00416195	**-195**	3	0.138-0.630	7.677	1.496-3.189	5.315	0.0-0.236	1.417	2.441	1.378	1.750						
1960 00422105	**CAT40-HDZ22 -105**	3	0.138-0.866	4.134	1.850-4.055	1.220	0.0-0.315	1.811	2.717	1.378	1.750		HDS-22	HDP-22	S-5L	FDC-22	L-5T (5mm)
1960 00422120	**-120**	3	0.138-0.866	4.724	1.850-4.055	1.811	0.0-0.315	1.811	2.717	1.378	1.750						
1960 00422135	**-135**	3	0.138-0.866	5.315	1.850-4.055	2.402	0.0-0.315	1.811	2.717	1.378	1.750						
1960 00422165	**-165**	3	0.138-0.866	6.496	1.850-4.055	3.583	0.0-0.315	1.811	2.717	1.378	1.750						
1960 00422195	**-195**	3	0.138-0.866	7.677	1.850-4.055	4.764	0.0-0.315	1.811	2.717	1.378	1.750						
1960 00507090	**CAT50-HDZ07 - 90**	1	0.020-0.276	3.543	0.866-1.772	1.535	0.0-0.157	0.906	1.614	—	2.750		HDS-07	HDP-07A	S-0	FDC-07	L-3T (3mm)
1960 00507105	**-105**	1	0.020-0.276	4.134	0.866-1.772	2.126	0.0-0.157	0.906	1.614	—	2.750						
1960 00507120	**-120**	1	0.020-0.276	4.724	0.866-1.772	2.717	0.0-0.157	0.906	1.614	—	2.750						
1960 00507135	**-135**	1	0.020-0.276	5.315	0.866-1.772	3.307	0.0-0.157	0.906	1.614	—	2.750	3.3					
1960 00507165	**-165**	1	0.020-0.276	6.496	0.866-1.772	4.291	0.0-0.157	0.906	1.614	—	2.750						
1960 00507195	**-195**	1	0.020-0.276	7.677	0.866-1.772	5.669	0.0-0.157	0.906	1.614	—	2.750						
1960 00509090	**CAT50-HDZ09 - 90**	1	0.098-0.354	3.543	1.063-2.244	1.378	0.0-0.157	1.024	1.772	—	2.750		HDS-09	HDP-09	S-1L	FDC-09	
1960 00509105	**-105**	1	0.098-0.354	4.134	1.063-2.244	1.969	0.0-0.157	1.024	1.772	—	2.750	3.3					
1960 00509120	**-120**	1	0.098-0.354	4.724	1.063-2.244	2.559	0.0-0.157	1.024	1.772	—	2.750						
1960 00509135	**-135**	1	0.098-0.354	5.315	1.063-2.244	3.150	0.0-0.157	1.024	1.772	—	2.750	3.4					
1960 00509165	**-165**	1	0.098-0.354	6.496	1.063-2.244	4.331	0.0-0.157	1.024	1.772	—	2.750						
1960 00509195	**-195**	1	0.098-0.354	7.677	1.063-2.244	5.512	0.0-0.157	1.024	1.772	—	2.750						
1960 00509225	**-225**	1	0.098-0.354	8.858	1.063-2.244	6.693	0.0-0.157	1.024	1.772	—	2.750						
1960 00509255	**-255**	1	0.098-0.354	10.039	1.063-2.244	7.874	0.0-0.157	1.024	1.772	—	2.750						

Inch to Metric (mm) → Inch × 25.4
Metric (mm) to Inch → Metric ÷ 25.4 or Metric × 0.03937

Special / Custom Sizes on request

Unit : Inch

Code	Model	Type	d	L	L1	L2	B	D	D1	L0	D2	kg	Preset Screw	Nut	Spanner	Collet	Hex. Wrench (Size)
1960 00512090	**CAT50-HDZ12 - 90**	1	0.098-0.472	3.543	1.299-2.677	1.378	0.0-0.197	1.260	2.205	—	2.750		HDS-12	HDP-12	S-3L	FDC-12	L-4T (4mm)
1960 00512105	**-105**	1	0.098-0.472	4.134	1.299-2.677	1.969	0.0-0.197	1.260	2.205	—	2.750	3.5					
1960 00512120	**-120**	1	0.098-0.472	4.724	1.299-2.677	2.559	0.0-0.197	1.260	2.205	—	2.750						
1960 00512135	**-135**	1	0.098-0.472	5.315	1.299-2.677	3.150	0.0-0.197	1.260	2.205	—	2.750	3.7					
1960 00512165	**-165**	1	0.098-0.472	6.496	1.299-2.677	4.331	0.0-0.197	1.260	2.205	—	2.750	3.8					
1960 00512195	**-195**	1	0.098-0.472	7.677	1.299-2.677	5.512	0.0-0.197	1.260	2.205	—	2.750						
1960 00512225	**-225**	1	0.098-0.472	8.858	1.299-2.677	6.693	0.0-0.197	1.260	2.205	—	2.750	4.1					
1960 00512255	**-255**	1	0.098-0.472	10.039	1.299-2.677	7.874	0.0-0.197	1.260	2.205	—	2.750						
1960 00516090	**CAT50-HDZ16 - 90**	1	0.138-0.630	3.543	1.496-3.189	1.378	0.0-0.236	1.417	2.441	—	2.750	3.6	HDS-16	HDP-16	S-4L	FDC-16	
1960 00516105	**-105**	1	0.138-0.630	4.134	1.496-3.189	1.969	0.0-0.236	1.417	2.441	—	2.750	3.7					
1960 00516120	**-120**	1	0.138-0.630	4.724	1.496-3.189	2.559	0.0-0.236	1.417	2.441	—	2.750	3.7					
1960 00516135	**-135**	1	0.138-0.630	5.315	1.496-3.189	3.150	0.0-0.236	1.417	2.441	—	2.750	3.8					
1960 00516165	**-165**	1	0.138-0.630	6.496	1.496-3.189	4.331	0.0-0.236	1.417	2.441	—	2.750	4					
1960 00516195	**-195**	1	0.138-0.630	7.677	1.496-3.189	5.512	0.0-0.236	1.417	2.441	—	2.750						
1960 00516225	**-225**	1	0.138-0.630	8.858	1.496-3.189	6.693	0.0-0.236	1.417	2.441	—	2.750						
1960 00516255	**-255**	1	0.138-0.630	10.039	1.496-3.189	7.874	0.0-0.236	1.417	2.441	—	2.750						
1960 00522105	**CAT50-HDZ22 -105**	3	0.138-0.866	4.134	1.850-4.055	2.205	0.0-0.315	1.811	2.992	1.378	2.750	4.1	HDS-22	HDP-22	S-5L	FDC-22	L-5T (5mm)
1960 00522120	**-120**	3	0.138-0.866	4.724	1.850-4.055	2.795	0.0-0.315	1.811	2.992	1.378	2.750	4.3					
1960 00522135	**-135**	3	0.138-0.866	5.315	1.850-4.055	3.386	0.0-0.315	1.811	2.992	1.378	2.750	4.4					
1960 00522165	**-165**	3	0.138-0.866	6.496	1.850-4.055	3.976	0.0-0.315	1.811	2.992	1.378	2.750	4.7					
1960 00522195	**-195**	3	0.138-0.866	7.677	1.850-4.055	5.157	0.0-0.315	1.811	2.992	1.378	2.750						
1960 00522225	**-225**	3	0.138-0.866	8.858	1.850-4.055	6.339	0.0-0.315	1.811	2.992	1.378	2.750	5.3					
1960 00522255	**-255**	3	0.138-0.866	10.039	1.850-4.055	7.520	0.0-0.315	1.811	2.992	1.378	2.750						

1.Collet, spanner, hexagon head preset screw, preset screw for semi-dry processing, and hex. wrench are sold separately. Standard preset screw is included.
2.Refer to P.092 for minimum tool insertion length in case of using our coolant collets (OH,C or MS).
3.L1 indicates dimension when using with a preset screw.
4.See P.499 for standard Tightening Torque.
5.Standard preset screw is included.

Collet P. 086 - 089

Spanner P. 095

Preset screw P. 094

Hex. wrench P. 095









Ordering Example

CAT40 - **HDZ** **12** - **150**

CAT40: Shank size
12: Max. collet I.D.
150: Projection length (L)

CTZ

"R"Zero Holder for Large Diameter

● Runout of the cutting edge can be adjusted as close as to zero.Suitable for large diameter reaming.

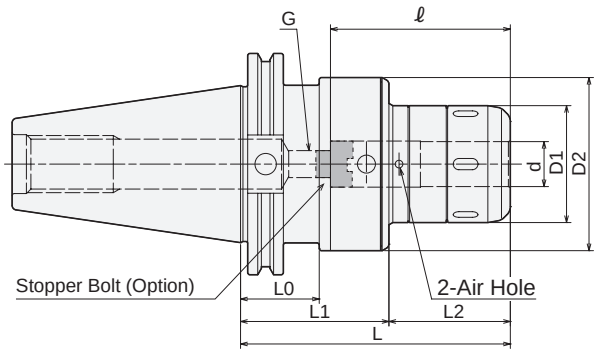

Caution

Please rotate the clamping ring counterclockwise more than 360 degrees after a cutting tool is removed.

Metric Sizes

Unit : Metric

Code	Model	Type	d	L	L1	L2	D1	D2	L0	ℓ	G P=1.0	Spanner	Hex. Wrench
1850 11432135	CAT40 -CTZ1000A -135	1	25.4	135	64	71	61	74	35	80	12	HS-2.5-25	L-6L (Included)
1850 11432150	-150	1	25.4	150	64	86	61	74	35	80	12		
1850 11440135	-CTZ1250A -135	1	31.75	135	64	71	68	80	35	120	18	HS-3-32	
1850 11440150	-150	1	31.75	150	64	86	68	80	35	120	18		
1850 11532135	CAT50 -CTZ1000A -135	1	25.4	135	64	71	61	74	35	80	12	HS-2.5-25	
1850 11532150	-150	1	25.4	150	64	86	61	74	35	80	12		
1850 11540135	-CTZ1250A -135	1	31.75	135	64	71	68	80	35	120	18	HS-3-32	
1850 11540150	-150	1	31.75	150	64	86	68	80	35	120	18		

1. When ordering, indicate number of spanners required. “No charge” spanners are limited to number of holders on order.
2. A L-6L wrench is included.
3. All accessories including straight collets can be used with above holders.
4. Use 2pcs. of M4 × 5(S)hex. screw to close air holes on the holder when internal coolant is used.

Stopper Bolt	Straight Collet		Morse Taper Adapter		Jacobs Adapter	
BL (P.068)	MC (P.066)	MCA (P.067)	MA (P.068)	MAB (P.068)	JA (P.069)	JAB (P.069)

Ordering Example

CAT40 - CTZ **1000** A - **135**

Shank size | I.D. (d) | Projection length (L)

Spanner

P. 069



Min. chucking length

Direct Chucking (without MC Collet)

Model	Min. chucking length
CTZ1000A, CTZ1250A	50mm

With MC Collet

Collet I.D.	Min. chucking length	
	MC	MC-C、MC-OH
1/4, 5/16	30mm	30mm
3/8, 1/2	40mm	40mm
5/8, 3/4, 7/8	45mm	45mm
1	50mm	50mm

Inch to Metric (mm) → Inch × 25.4
Metric (mm) to Inch → Metric ÷ 25.4 or Metric × 0.03937

Special / Custom Sizes on request

PHZ·S New

Slim Hydro "R" Zero Holder

Type1

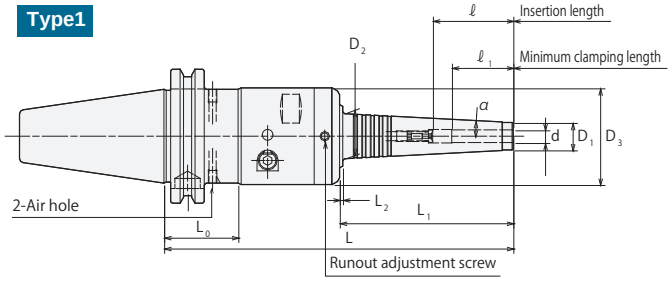

Type2

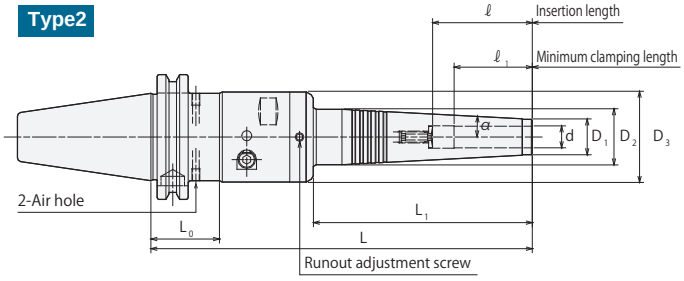

Metric Sizes

Unit : Metric

Code	Model	Type	d	L	L1	L2	D1	D2	D3	L0	ℓ	ℓ 1	α	Hex. wrench for the actuating screw (Option)	Hex. wrench for runout adjustment screw (Option)
1810 00406150	CAT40 -PHZ06S -150	1	6	150	67	1.5	13	19.9	46	35.05	37	29	3°	L-4T	L-3T
1810 00406180	-180	1	6	180	97	1.5	13	23.1	46	35.05	37	29	3°		
1810 00407150	CAT40 -PHZ07S -150	1	7	150	67	1.5	14	20.9	46	35.05	37	29	3°		
1810 00407180	-180	1	7	180	97	1.5	14	24.1	46	35.05	37	29	3°		
1810 00408150	CAT40 -PHZ08S -150	1	8	150	67	1.5	15	21.9	46	35.05	50	29	3°		
1810 00408180	-180	1	8	180	97	1.5	15	25.1	46	35.05	50	29	3°		
1810 00409150	CAT40 -PHZ09S -150	1	9	150	67	1.5	16	22.9	46	35.05	50	40	3°		
1810 00409180	-180	1	9	180	97	1.5	16	26.1	46	35.05	50	40	3°		
1810 00410150	CAT40 -PHZ10S -150	1	10	150	67	1.5	17	23.9	46	35.05	50	40	3°		
1810 00410180	-180	1	10	180	97	1.5	17	27.1	46	35.05	50	40	3°		
1810 00411150	CAT40 -PHZ11S -150	1	11	150	67	1.5	18	24.9	46	35.05	50	40	3°		
1810 00411180	-180	1	11	180	97	—	18	28	46	35.05	50	40	3°		
1810 00412150	CAT40 -PHZ12S -150	1	12	150	67	1.5	19	25.9	46	35.05	70	40	3°		
1810 00412180	-180	2	12	180	97	—	19	28.2	46	35.05	70	40	3°		

1. Tool shank diameter tolerance must be within h6.
2. Do not leave the holder with actuating screw tightened when the chuck is empty.
3. Hex-head screws (included) are necessary to plug air hole for center through coolant feed.

Tightening torque (Torque wrench : p.498)

model	I.D. (d)		Tightening torque (Nm)
	mm	inch	
PHZ·S	06 ~ 12	—	9 ~ 10

Hex. wrench

P. 095



Ordering Example

CAT40 - PHZ 12 S - 150

Shank size | I.D. (d) | Projection length (L)

Inch to Metric (mm) → Inch × 25.4
Metric (mm) to Inch → Metric ÷ 25.4 or Metric × 0.03937

Special / Custom Sizes on request

PHC·A

Power Hydro Chuck

● Hydro chuck with collet holder flexibility. Suitable for high precision cutting.

Type1

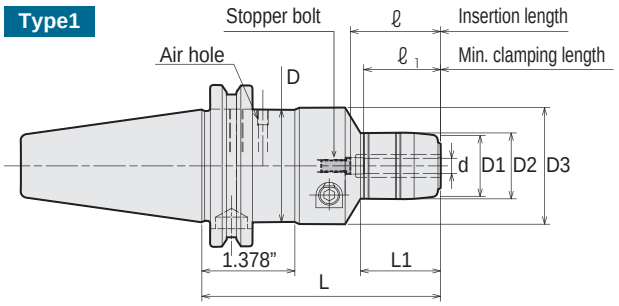

Type2

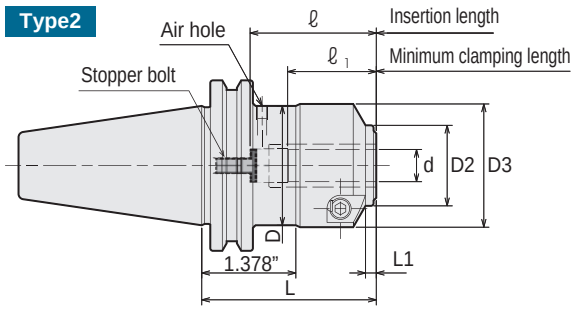

For PHC04A, the Stopper bolt is not included.
Please order separately (Special item).

Type3

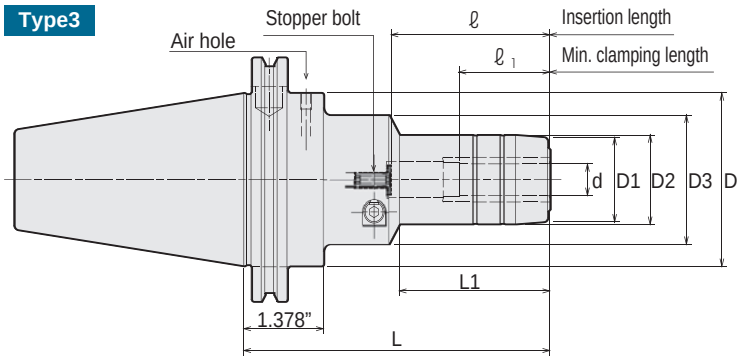

Inch Sizes

Unit : Inch

Code	Model	Type	d	L	L1	D	D1	D2	D3	ℓ	ℓ1	wrench (Option)
1860 11408065	CAT40 -PHC0250A -65	2	0.25	2.56	0.158	1.75	—	1.024	1.807	1.338	1.142	
1860 11408090	-90	1	0.25	3.544	1.19	1.75	0.945	1.024	1.811	1.338	1.142	
1860 11408120	-120	1	0.25	4.725	1.623	1.75	0.945	1.024	1.811	1.771	1.142	
1860 11410065	CAT40 -PHC0312A -65	2	0.312	2.56	0.158	1.75	—	1.103	1.807	1.338	1.142	
1860 11410090	-90	1	0.312	3.544	1.213	1.75	1.024	1.103	1.811	1.338	1.142	
1860 11410120	-120	1	0.312	4.725	1.646	1.75	1.024	1.103	1.811	1.771	1.142	
1860 11412065	CAT40 -PHC0375A -65	2	0.375	2.56	0.158	1.75	—	1.182	1.807	1.771	1.3	
1860 11412105	-105	1	0.375	4.134	1.758	1.75	1.103	1.182	2.048	1.968	1.575	
1860 11412135	-135	1	0.375	5.315	2.546	1.75	1.103	1.182	2.048	2.755	1.575	L-4T (4mm)
1860 11416065	CAT40 -PHC0500A -65	2	0.5	2.56	0.158	1.75	—	1.182	1.969	1.771	1.3	
1860 11416105	-105	1	0.5	4.134	1.826	1.75	1.339	1.418	2.048	1.968	1.575	
1860 11416135	-135	1	0.5	5.315	2.614	1.75	1.339	1.418	2.048	2.755	1.575	
1860 11420065	CAT40 -PHC0625A -65	2	0.625	2.56	0.158	1.75	—	1.182	1.969	17.71	1.3	
1860 11420105	-105	1	0.625	4.134	1.849	1.75	1.418	1.496	2.048	1.968	1.575	
1860 11420135	-135	1	0.625	5.315	2.637	1.75	1.418	1.496	2.048	2.755	1.575	
1860 11424105	CAT40 -PHC0750A -105	1	0.75	4.134	1.963	1.75	1.575	1.654	1.811	1.968	1.575	
1860 11424135	-135	1	0.75	5.315	2.75	1.75	1.575	1.654	1.811	2.755	1.575	
1860 11432120	CAT40 -PHC1000A -120	1	1	4.725	2.328	1.75	1.969	2.048	2.441	2.362	1.969	
1860 11432150	-150	1	1	5.906	3.115	1.75	1.969	2.048	2.441	3.149	1.969	L-6T
1860 11440135	CAT40 -PHC1250A -135	1	1.25	5.315	—	1.75	2.363	2.441	2.441	2.952	2.56	(6mm)
1860 11440165	-165	1	1.25	6.496	—	1.75	2.363	2.441	—	3.149	2.56	

Inch to Metric (mm) → Inch × 25.4
Metric (mm) to Inch → Metric ÷ 25.4 or Metric × 0.03937

Special / Custom Sizes on request

Inch Sizes

Unit : Inch

Code	Model	Type	d	L	L1	D	D1	D2	D3	ℓ	ℓ1	wrench (Option)
—	CAT50 -PHC0250A -90	3	0.25	3.544	1.19	2.75	0.945	1.024	1.811	1.338	1.142	
—	-120	3	0.25	4.725	1.623	2.75	0.945	1.024	1.811	1.771	1.142	
—	-150	3	0.25	5.906	1.623	2.75	0.945	1.024	1.811	1.771	1.142	
—	CAT50 -PHC0312A -90	3	0.312	3.544	1.213	2.75	1.024	1.103	1.811	1.338	1.142	
—	-120	3	0.312	4.725	1.646	2.75	1.024	1.103	1.811	1.771	1.142	
—	-150	3	0.312	5.906	1.646	2.75	1.024	1.103	1.811	1.771	1.142	
—	CAT50 -PHC0375A -105	3	0.375	4.134	1.758	2.75	1.103	1.182	2.048	1.968	1.575	
—	-135	3	0.375	5.315	2.546	2.75	1.103	1.182	2.048	2.755	1.575	
—	-165	3	0.375	6.496	2.546	2.75	1.103	1.182	2.048	2.755	1.575	L-4T
—	CAT50 -PHC0500A -105	3	0.5	4.134	1.826	2.75	1.339	1.418	2.048	1.968	1.575	(4mm)
—	-135	3	0.5	5.315	2.614	2.75	1.339	1.418	2.048	2.755	1.575	
—	-165	3	0.5	6.496	2.614	2.75	1.339	1.418	2.048	2.755	1.575	
—	CAT50 -PHC0625A -105	3	0.625	4.134	1.849	2.75	1.418	1.496	2.048	1.968	1.575	
—	-135	3	0.625	5.315	2.637	2.75	1.418	1.496	2.048	2.755	1.575	
—	-165	3	0.625	6.496	2.637	2.75	1.418	1.496	2.048	2.755	1.575	
—	CAT50 -PHC0750A -105	3	0.75	4.134	1.963	2.75	1.575	1.654	1.811	1.968	1.575	
—	-135	3	0.75	5.315	2.75	2.75	1.575	1.654	1.811	2.755	1.575	
—	-165	3	0.75	6.496	2.75	2.75	1.575	1.654	1.811	2.755	1.575	
—	CAT50 -PHC1000A -120	3	1	4.725	2.328	2.75	1.969	2.048	2.441	2.362	1.969	
—	-150	3	1	5.906	3.115	2.75	1.969	2.048	2.441	3.149	1.969	
—	-165	3	1	6.496	3.115	2.75	1.969	2.048	2.441	3.149	1.969	L-6T
—	CAT50 -PHC1250A -135	3	1.25	5.315	—	2.75	2.363	2.441	—	2.952	2.56	(6mm)
—	-165	3	1.25	6.496	—	2.75	2.363	2.441	—	3.149	2.56	

1. Cutting tool shank must be within tolerances specified below ;
   Shank diameter less than 6mm : Within h6 tolerance
   Shank diameter 6mm and over : Within h7 tolerance
   h6 or 0/-0.01 tolerance is recommended when newly making a cutting tool.
2. Do not leave the holder with actuating screw tightened when the chuck is empty.
3. PHC0500A and PHC0750A have pin holes for collet with stopper pin on its body.
4. Hex-head screws (included) are necessary to plug air hole for center through coolant feed.
5. For PHC04A, the stopper bolt is not included. Please order separately (Special item).
6. For PHC04A, the length adjustment unit cannot be used.

Tightening torque (Torque wrench : p.498)

model	I.D. (d) inch	Tightening torque (Nm)
PHC·A	0250 ~ 0312	11 ~ 12
PHC·A	0375 ~ 0750	7 ~ 8
PHC·A	1000, 1250	29 ~ 30

Ordering Example

CAT40 - PHC 0250 A - 120

Shank size | I.D. (d) | Projection length (L)

PHS Collet
P.110

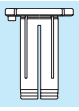

Hex. wrench
P. 095



Inch to Metric (mm) → Inch × 25.4
Metric (mm) to Inch → Metric ÷ 25.4 or Metric × 0.03937

Special / Custom Sizes on request

Type1

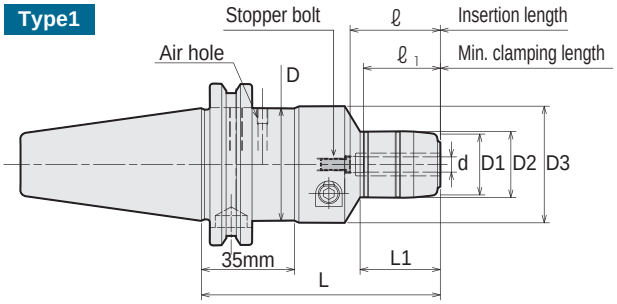

Type2

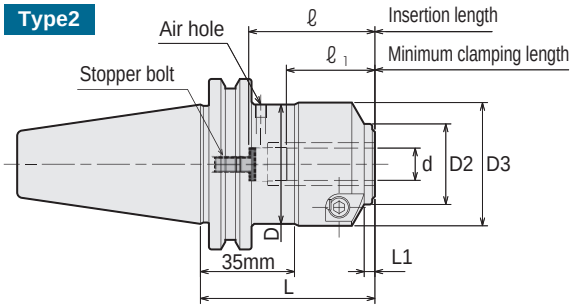

For PHC04A, the Stopper bolt is not included.
Please order separately (Special item).

Type3

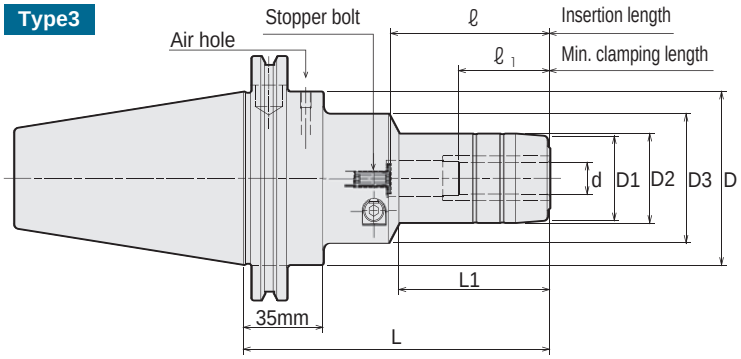

Metric Sizes

Unit : Inch

Code	Model	Type	d	L	L1	D	D1	D2	D3	ℓ	ℓ1	wrench (Option)
1860 01404080	CAT40 -PHC04A -80	1	4	80	25.1	—	25	46	—	29	24	
1860 01406065	CAT40 -PHC06A -65	2	6	65	4	—	—	26	44.45	34	29	
1860 01406090	-90	1	6	90	30	44.45	24	26	46	34	29	
1860 01406120	-120	1	6	120	41	44.45	24	26	46	45	29	
1860 01407065	CAT40 -PHC07A -65	2	7	65	4	—	—	28	44.45	34	29	
1860 01407090	-90	1	7	90	30	44.45	26	28	46	34	29	
1860 01407120	-120	1	7	120	41	44.45	26	28	46	45	29	
1860 01408065	CAT40 -PHC08A -65	2	8	65	4	—	—	28	44.45	34	29	
1860 01408090	-90	1	8	90	30	44.45	26	28	46	34	29	
1860 01408120	-120	1	8	120	41	44.45	26	28	46	45	29	
1860 01409065	CAT40 -PHC09A -65	2	9	65	4	—	—	30	44.45	45	33	
1860 01409105	-105	1	9	105	44	44.45	28	30	52	50	40	
1860 01409135	-135	1	9	135	64	44.45	28	30	52	70	40	
1860 01410065	CAT40 -PHC10A -65	2	10	65	4	—	—	30	44.45	45	33	
1860 01410105	-105	1	10	105	44	44.45	28	30	52	50	40	
1860 01410135	-135	1	10	135	64	44.45	28	30	52	70	40	
1860 01411065	CAT40 -PHC11A -65	2	11	65	4	—	—	30	44.45	45	33	
1860 01411105	-105	1	11	105	45	44.45	30	32	52	50	40	L-4T (4mm)
1860 01411135	-135	1	11	135	65	44.45	30	32	52	70	40	
1860 01412065	CAT40 -PHC12A -65	2	12	65	4	—	—	30	44.45	45	33	
1860 01412105	-105	1	12	105	45	44.45	30	32	52	50	40	
1860 01412135	-135	1	12	135	65	44.45	30	32	52	70	40	
1860 01413065	CAT40 -PHC13A -65	3	13	65	4	44.45	—	30	50	45	33	
1860 01413105	-105	1	13	105	46	44.45	34	36	52	50	40	
1860 01413135	-135	1	13	135	66	44.45	34	36	52	70	40	
1860 01414065	CAT40 -PHC14A -65	3	14	65	4	44.45	—	30	50	45	33	
1860 01414105	-105	1	14	105	46	44.45	34	36	52	50	40	
1860 01414135	-135	1	14	135	66	44.45	34	36	52	70	40	
1860 01415065	CAT40 -PHC15A -65	3	15	65	4	44.45	—	30	50	45	33	
1860 01415105	-105	1	15	105	46	44.45	36	38	52	50	40	
1860 01415135	-135	1	15	135	66	44.45	36	38	52	70	40	
1860 01416065	CAT40 -PHC16A -65	3	16	65	4	44.45	—	30	50	45	33	
1860 01416105	-105	1	16	105	46	44.45	36	38	52	50	40	
1860 01416135	-135	1	16	135	66	44.45	36	38	52	70	40	
1860 01420105	CAT40 -PHC20A -105	1	20	105	49	44.45	40	42	46	50	40	
1860 01420135	-135	1	20	135	69	44.45	40	42	46	70	40	
1860 01425120	CAT40 -PHC25A -120	1	25	120	59	44.45	50	52	62	60	50	
1860 01425150	-150	1	25	150	79	44.45	50	52	62	80	50	L-6T (6mm)
1860 01432135	CAT40 -PHC32A -135	1	32	135	100	44.45	60	62	—	75	65	
1860 01432165	-165	1	32	165	130	44.45	60	62	—	80	65	

Inch to Metric (mm) → Inch × 25.4
Metric (mm) to Inch → Metric ÷ 25.4 or Metric × 0.03937

Special / Custom Sizes on request

Metric Sizes

Unit : Inch

Code	Model	Type	d	L	L1	D	D1	D2	D3	ℓ	ℓ1	wrench (Option)
—	CAT50 -PHC06A -90	3	6	90	30	69.85	24	26	46	34	29	
—	-120	3	6	120	41	69.85	24	26	46	45	29	
—	-150	3	6	150	41	69.85	24	26	46	45	29	
—	CAT50 -PHC07A -90	3	7	90	30	69.85	26	28	46	34	29	
—	-120	3	7	120	41	69.85	26	28	46	45	29	
—	-150	3	7	150	41	69.85	26	28	46	45	29	
—	CAT50 -PHC08A -90	3	8	90	30	69.85	26	28	46	34	29	
—	-120	3	8	120	41	69.85	26	28	46	45	29	
—	-150	3	8	150	41	69.85	26	28	46	45	29	
—	CAT50 -PHC09A -105	3	9	105	44	69.85	28	30	52	50	40	
—	-135	3	9	135	64	69.85	28	30	52	70	40	
—	-165	3	9	165	64	69.85	28	30	52	70	40	
—	CAT50 -PHC10A -105	3	10	105	44	69.85	28	30	52	50	40	
—	-135	3	10	135	64	69.85	28	30	52	70	40	
—	-165	3	10	165	64	69.85	28	30	52	70	40	
—	CAT50 -PHC11A -105	3	11	105	45	69.85	30	32	52	50	40	
—	-135	3	11	135	65	69.85	30	32	52	70	40	
—	-165	3	11	165	65	69.85	30	32	52	70	40	L-4T (4mm)
—	CAT50 -PHC12A -105	3	12	105	45	69.85	30	32	52	50	40	
—	-135	3	12	135	65	69.85	30	32	52	70	40	
—	-165	3	12	165	65	69.85	30	32	52	70	40	
—	CAT50 -PHC13A -105	3	13	105	46	69.85	34	36	52	50	40	
—	-135	3	13	135	66	69.85	34	36	52	70	40	
—	-165	3	13	165	66	69.85	34	36	52	70	40	
—	CAT50 -PHC14A -105	3	14	105	46	69.85	34	36	52	50	40	
—	-135	3	14	135	66	69.85	34	36	52	70	40	
—	-165	3	14	165	66	69.85	34	36	52	70	40	
—	CAT50 -PHC15A -105	3	15	105	46	69.85	36	38	52	50	40	
—	-135	3	15	135	66	69.85	36	38	52	70	40	
—	-165	3	15	165	66	69.85	36	38	52	70	40	
—	CAT50 -PHC16A -105	3	16	105	46	69.85	36	38	52	50	40	
—	-135	3	16	135	66	69.85	36	38	52	70	40	
—	-165	3	16	165	66	69.85	36	38	52	70	40	
—	CAT50 -PHC20A -105	3	20	105	49	69.85	40	42	46	50	40	
—	-135	3	20	135	69	69.85	40	42	46	70	40	
—	-165	3	20	165	69	69.85	40	42	46	70	40	
—	CAT50 -PHC25A -120	3	25	120	59	69.85	50	52	62	64	50	
—	-150	3	25	150	79	69.85	50	52	62	80	50	L-6T (6mm)
—	-165	3	25	165	79	69.85	50	52	62	80	50	
—	CAT50 -PHC32A -135	3	32	135	—	69.85	60	62	—	75	65	
—	-165	3	32	165	—	69.85	60	62	—	80	65	

1. Cutting tool shank must be within tolerances specified below ;
   Shank diameter less than 6mm : Within h6 tolerance
   Shank diameter 6mm and over : Within h7 tolerance
   h6 or 0/-0.01 tolerance is recommended when newly making a cutting tool.
2. Do not leave the holder with actuating screw tightened when the chuck is empty.
3. PHC12A and PHC20A have pin holes for collet with stopper pin on its body.
4. Hex-head screws (included) are necessary to plug air hole for center through coolant feed.
5. For PHC04A, the stopper bolt is not included. Please order separately (Special item).
6. For PHC04A, the length adjustment unit cannot be used.

Tightening torque (Torque wrench : p.498)

model	I.D. (d) mm	Tightening torque (Nm)
PHC·A	06 ~ 08	11 ~ 12
PHC·A	09 ~ 20	7 ~ 8
PHC·A	25, 32	29 ~ 30

Ordering Example

CAT40 - PHC 12 A - 135

Shank size | I.D. (d) | Projection length (L)

PHS Collet
P.110

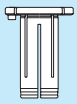

Hex. wrench
P. 095



Inch to Metric (mm) → Inch × 25.4
Metric (mm) to Inch → Metric ÷ 25.4 or Metric × 0.03937

Special / Custom Sizes on request

Length adjustment unit

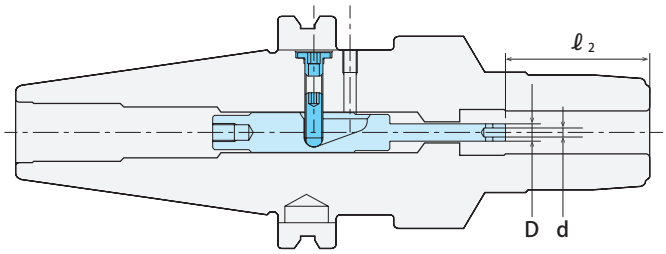

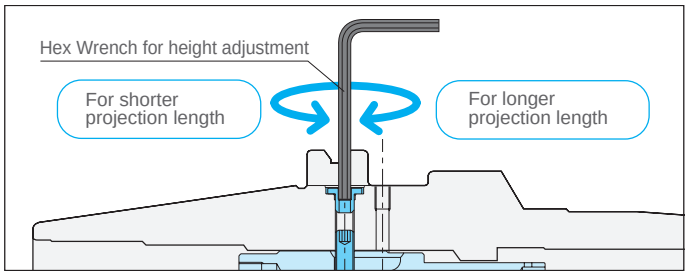

Inch Sizes

Unit : Metric

Code	Length adjustment unit	Matched chuck	Adjustment range ℓ2	Adjustable amount	Pin end I.D. d	Pin end O.D. D
3934 24045423	**PHC-P404-5423**	CAT40 -PHC0250A -90	29-34	5	2	3.8
3934 24047334	**PHC-P404-7334**	-120	29-39	10	2	3.8
3934 24047328	**PHC-P404-7328**	-120	35-45	10	2	3.8
3934 24045423	**PHC-P404-5423**	CAT40 -PHC0312A -90	29-34	5	2	3.8
3934 24047334	**PHC-P404-7334**	-120	29-39	10	2	3.8
3934 24047328	**PHC-P404-7328**	-120	35-45	10	2	3.8
3934 24054932	**PHC-P405-4932**	CAT40 -PHC0375A -105	40-50	10	2.5	4.8
3934 24055952	**PHC-P405-5952**	-135	40-50	10	2.5	4.8
3934 24054952	**PHC-P405-4952**	-135	50-60	10	2.5	4.8
3934 24054942	**PHC-P405-4942**	-135	60-70	10	2.5	4.8
3934 24054932	**PHC-P405-4932**	CAT40 -PHC0500A -105	40-50	10	2.5	4.8
3934 24055952	**PHC-P405-5952**	-135	40-50	10	2.5	4.8
3934 24054952	**PHC-P405-4952**	-135	50-60	10	2.5	4.8
3934 24054942	**PHC-P405-4942**	-135	60-70	10	2.5	4.8
3934 24054932	**PHC-P405-4932**	CAT40 -PHC0625A -105	40-50	10	2.5	4.8
3934 24055952	**PHC-P405-5952**	-135	40-50	10	2.5	4.8
3934 24054952	**PHC-P405-4952**	-135	50-60	10	2.5	4.8
3934 24054942	**PHC-P405-4942**	-135	60-70	10	2.5	4.8
3934 24054932	**PHC-P405-4932**	CAT40 -PHC0750A -105	40-50	10	2.5	4.8
3934 24055952	**PHC-P405-5952**	-135	40-50	10	2.5	4.8
3934 24054952	**PHC-P405-4952**	-135	50-60	10	2.5	4.8
3934 24054942	**PHC-P405-4942**	-135	60-70	10	2.5	4.8
3934 24055432	**PHC-P405-5432**	CAT40 -PHC1000A -120	50-60	10	2.5	4.8
3934 24056452	**PHC-P405-6452**	-150	50-60	10	2.5	4.8
3934 24055452	**PHC-P405-5452**	-150	60-70	10	2.5	4.8
3934 24055442	**PHC-P405-5442**	-150	70-80	10	2.5	4.8
3934 24055432	**PHC-P405-5432**	CAT40 -PHC1250A -135	65-75	10	2.5	4.8
3934 24056452	**PHC-P405-6452**	-165	65-75	10	2.5	4.8
3934 24055952	**PHC-P405-5952**	-165	70-80	10	2.5	4.8

Length adjustment unit can be used for chucks other than 45mm projection length.
Length adjustment unit can be used with BT, CAT and SK shank chucks only.
For PHC04A, the length adjustment unit cannot be used.

Ordering Example

CAT40-PHC10A-105 with adjustment range of 40-50mm
(Adjustable amount-10mm).

Chuck — **CAT40-PHC10A-105**

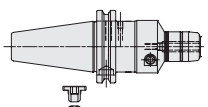

\+

Length adjustment unit — **PHC-P405-4932**

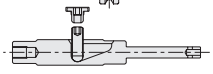

\+

Install / removal tool for length adjustment unit — **STS-R2**



Shank size	Hex wrench size for height adjustment	Install / removal tool for length adjustment unit
CAT40	2.5mm	STS-R2

Inch to Metric (mm) → Inch × 25.4
Metric (mm) to Inch → Metric ÷ 25.4 or Metric × 0.03937

Special / Custom Sizes on request

Metric Sizes

Unit : Metric

Code	Length adjustment unit	Adjustment range ℓ2	Matched chuck	Adjustable amount	Pin end I.D. d	Pin end O.D. D
3934 24045423	**PHC-P404-5423**	29-34	CAT40 -PHC06A -90	5	2	3.8
3934 24047334	**PHC-P404-7334**	29-39	-120	10	2	3.8
3934 24047328	**PHC-P404-7328**	35-45	-120	10	2	3.8
3934 24045423	**PHC-P404-5423**	29-34	CAT40 -PHC07A -90	5	2	3.8
3934 24047334	**PHC-P404-7334**	29-39	-120	10	2	3.8
3934 24047328	**PHC-P404-7328**	35-45	-120	10	2	3.8
3934 24045423	**PHC-P404-5423**	29-34	CAT40 -PHC08A -90	5	2	3.8
3934 24047334	**PHC-P404-7334**	29-39	-120	10	2	3.8
3934 24047328	**PHC-P404-7328**	35-45	-120	10	2	3.8
3934 24054932	**PHC-P405-4932**	40-50	CAT40 -PHC09A -105	10	2.5	4.8
3934 24055952	**PHC-P405-5952**	40-50	-135	10	2.5	4.8
3934 24054952	**PHC-P405-4952**	50-60	-135	10	2.5	4.8
3934 24054942	**PHC-P405-4942**	60-70	-135	10	2.5	4.8
3934 24054932	**PHC-P405-4932**	40-50	CAT40 -PHC10A -105	10	2.5	4.8
3934 24055952	**PHC-P405-5952**	40-50	-135	10	2.5	4.8
3934 24054952	**PHC-P405-4952**	50-60	-135	10	2.5	4.8
3934 24054942	**PHC-P405-4942**	60-70	-135	10	2.5	4.8
3934 24054932	**PHC-P405-4932**	40-50	CAT40 -PHC11A -105	10	2.5	4.8
3934 24055952	**PHC-P405-5952**	40-50	-135	10	2.5	4.8
3934 24054952	**PHC-P405-4952**	50-60	-135	10	2.5	4.8
3934 24054942	**PHC-P405-4942**	60-70	-135	10	2.5	4.8
3934 24054932	**PHC-P405-4932**	40-50	CAT40 -PHC12A -105	10	2.5	4.8
3934 24055952	**PHC-P405-5952**	40-50	-135	10	2.5	4.8
3934 24054952	**PHC-P405-4952**	50-60	-135	10	2.5	4.8
3934 24054942	**PHC-P405-4942**	60-70	-135	10	2.5	4.8
3934 24054932	**PHC-P405-4932**	40-50	CAT40 -PHC13A -105	10	2.5	4.8
3934 24055952	**PHC-P405-5952**	40-50	-135	10	2.5	4.8
3934 24054952	**PHC-P405-4952**	50-60	-135	10	2.5	4.8
3934 24054942	**PHC-P405-4942**	60-70	-135	10	2.5	4.8
3934 24054932	**PHC-P405-4932**	40-50	CAT40 -PHC14A -105	10	2.5	4.8
3934 24055952	**PHC-P405-5952**	40-50	-135	10	2.5	4.8
3934 24054952	**PHC-P405-4952**	50-60	-135	10	2.5	4.8
3934 24054942	**PHC-P405-4942**	60-70	-135	10	2.5	4.8
3934 24054932	**PHC-P405-4932**	40-50	CAT40 -PHC15A -105	10	2.5	4.8
3934 24055952	**PHC-P405-5952**	40-50	-135	10	2.5	4.8
3934 24054952	**PHC-P405-4952**	50-60	-135	10	2.5	4.8
3934 24054942	**PHC-P405-4942**	60-70	-135	10	2.5	4.8
3934 24054932	**PHC-P405-4932**	40-50	CAT40 -PHC16A -105	10	2.5	4.8
3934 24055952	**PHC-P405-5952**	40-50	-135	10	2.5	4.8
3934 24054952	**PHC-P405-4952**	50-60	-135	10	2.5	4.8
3934 24054942	**PHC-P405-4942**	60-70	-135	10	2.5	4.8
3934 24054932	**PHC-P405-4932**	40-50	CAT40 -PHC20A -105	10	2.5	4.8
3934 24055952	**PHC-P405-5952**	40-50	-135	10	2.5	4.8
3934 24054952	**PHC-P405-4952**	50-60	-135	10	2.5	4.8
3934 24054942	**PHC-P405-4942**	60-70	-135	10	2.5	4.8
3934 24055432	**PHC-P405-5432**	50-60	CAT40 -PHC25A -120	10	2.5	4.8
3934 24056452	**PHC-P405-6452**	50-60	-150	10	2.5	4.8
3934 24055452	**PHC-P405-5452**	60-70	-150	10	2.5	4.8
3934 24055442	**PHC-P405-5442**	70-80	-150	10	2.5	4.8
3934 24055432	**PHC-P405-5432**	65-75	CAT40 -PHC32A -135	10	2.5	4.8
3934 24056452	**PHC-P405-6452**	65-75	-165	10	2.5	4.8
3934 24055952	**PHC-P405-5952**	70-80	-165	10	2.5	4.8

Length adjustment unit can be used for chucks other than 45mm projection length.
Length adjustment unit can be used with BT, CAT and SK shank chucks only.
For PHC04A, the length adjustment unit cannot be used.

PHC·S New

Slim Hydro Chuck

● Perfect choice for tight space applications, such as endmill finishing, drilling and reaming on 5-axis machines.

Type1

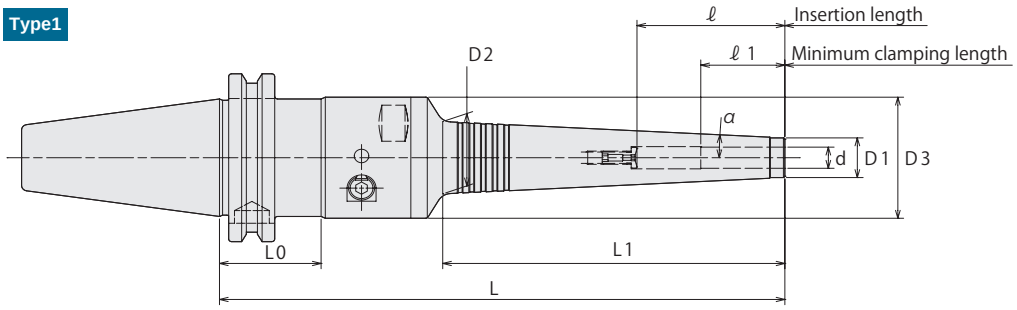

Type2

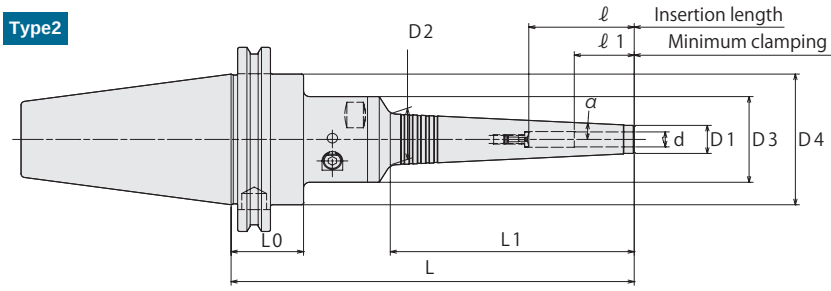

Inch Sizes

Unit : Inch

Code	Model	Type	d	L	L1	D1	D2	D3	D4	L0	ℓ	ℓ1	α	Wrench (Option)
-	CAT40 -PHC0250S -150	1	0.250	5.906	2.795	0.512	0.807	1.811	—	1.380	1.457	1.142	3°	L-4T
-	-165	1	0.250	6.496	3.425	0.512	0.874	1.811	—	1.380	1.457	1.142		
-	-180	1	0.250	7.087	4.016	0.512	0.933	1.811	—	1.380	1.457	1.142		
-	-195	1	0.250	7.677	4.646	0.512	1.000	1.811	—	1.380	1.457	1.142		
-	CAT40 -PHC0312S -150	1	0.312	5.906	2.835	0.591	0.890	1.811	—	1.380	1.969	1.142		
-	-165	1	0.312	6.496	3.425	0.591	0.953	1.811	—	1.380	1.969	1.142		
-	-180	1	0.312	7.087	4.055	0.591	1.016	1.811	—	1.380	1.969	1.142		
-	-195	1	0.312	7.677	4.646	0.591	1.079	1.811	—	1.380	1.969	1.142		
-	CAT40 -PHC0375S -150	1	0.375	5.906	2.835	0.669	0.969	1.811	—	1.380	1.969	1.575		
-	-165	1	0.375	6.496	3.465	0.669	1.035	1.811	—	1.380	1.969	1.575		
-	-180	1	0.375	7.087	4.055	0.669	1.094	1.811	—	1.380	1.969	1.575		
-	-195	1	0.375	7.677	4.685	0.669	1.161	1.811	—	1.380	1.969	1.575		
-	CAT40 -PHC0500S -150	1	0.500	5.906	2.874	0.787	1.091	1.811	—	1.380	2.756	1.575		
-	-165	1	0.500	6.496	3.504	0.787	1.157	1.811	—	1.380	2.756	1.575		
-	-180	1	0.500	7.087	4.094	0.787	1.220	1.811	—	1.380	2.756	1.575		
-	-195	1	0.500	7.677	4.724	0.787	1.283	1.811	—	1.380	2.756	1.575		
-	CAT50 -PHC0250S -150	2	0.250	5.906	2.795	0.512	0.807	1.811	2.750	1.380	1.457	1.142		
-	-165	2	0.250	6.496	3.425	0.512	0.874	1.811	2.750	1.380	1.457	1.142		
-	-180	2	0.250	7.087	4.016	0.512	0.933	1.811	2.750	1.380	1.457	1.142		
-	-195	2	0.250	7.677	4.646	0.512	1.000	1.811	2.750	1.380	1.457	1.142		
-	CAT50 -PHC0312S -150	2	0.312	5.906	2.835	0.591	0.890	1.811	2.750	1.380	1.969	1.142		
-	-165	2	0.312	6.496	3.425	0.591	0.953	1.811	2.750	1.380	1.969	1.142		
-	-180	2	0.312	7.087	4.055	0.591	1.016	1.811	2.750	1.380	1.969	1.142		
-	-195	2	0.312	7.677	4.646	0.591	1.079	1.811	2.750	1.380	1.969	1.142		
-	CAT50 -PHC0375S -150	2	0.375	5.906	2.835	0.669	0.969	1.811	2.750	1.380	1.969	1.575		
-	-165	2	0.375	6.496	3.465	0.669	1.035	1.811	2.750	1.380	1.969	1.575		
-	-180	2	0.375	7.087	4.055	0.669	1.094	1.811	2.750	1.380	1.969	1.575		
-	-195	2	0.375	7.677	4.685	0.669	1.161	1.811	2.750	1.380	1.969	1.575		
-	CAT50 -PHC0500S -150	2	0.500	5.906	2.874	0.787	1.091	1.811	2.750	1.380	2.756	1.575		
-	-165	2	0.500	6.496	3.504	0.787	1.157	1.811	2.750	1.380	2.756	1.575		
-	-180	2	0.500	7.087	4.094	0.787	1.220	1.811	2.750	1.380	2.756	1.575		
-	-195	2	0.500	7.677	4.724	0.787	1.283	1.811	2.750	1.380	2.756	1.575		

1. Tool shank diameter tolerance must be within h6.
2. Do not leave the holder with actuating screw tightened when the chuck is empty.
3. Hex-head screws are necessary to plug air hole for center through coolant feed.
4. Item code with - is semi standard item.

Ordering Example

CAT40 - PHC 0250 S - 150

CAT40: Shank size; 0250: I.D. (d); 150: Projection length (L)

Inch to Metric (mm) → Inch × 25.4
Metric (mm) to Inch → Metric ÷ 25.4 or Metric × 0.03937

Special / Custom Sizes on request

Metric Sizes

Unit : Metric

Code	Model	Type	d	L	L1	D1	D2	D3	L0	ℓ	ℓ1	α	Wrench (Option)
1830 00406150	CAT40 -PHC06S -150	1	6	150	71	13	20.5	46	35.05	37	29		
1830 00406165	-165	1	6	165	87	13	22.2	46	35.05	37	29		
1830 00406180	-180	1	6	180	102	13	23.7	46	35.05	37	29		
1830 00406195	-195	1	6	195	118	13	25.4	46	35.05	37	29		
1830 00407150	CAT40 -PHC07S -150	1	7	150	71	14	21.5	46	35.05	37	29		
1830 00407165	-165	1	7	165	87	14	23.2	46	35.05	37	29		
1830 00407180	-180	1	7	180	102	14	24.7	46	35.05	37	29		
1830 00407195	-195	1	7	195	118	14	26.4	46	35.05	37	29		
1830 00408150	CAT40 -PHC08S -150	1	8	150	72	15	22.6	46	35.05	50	29		
1830 00408165	-165	1	8	165	87	15	24.2	46	35.05	50	29		
1830 00408180	-180	1	8	180	103	15	25.8	46	35.05	50	29		
1830 00408195	-195	1	8	195	118	15	27.4	46	35.05	50	29		
1830 00409150	CAT40 -PHC09S -150	1	9	150	72	16	23.6	46	35.05	50	40		
1830 00409165	-165	1	9	165	87	16	25.2	46	35.05	50	40		
1830 00409180	-180	1	9	180	103	16	26.8	46	35.05	50	40		
1830 00409195	-195	1	9	195	118	16	28.4	46	35.05	50	40		L-4T
1830 00410150	CAT40 -PHC10S -150	1	10	150	72	17	24.6	46	35.05	50	40		
1830 00410165	-165	1	10	165	88	17	26.3	46	35.05	50	40		
1830 00410180	-180	1	10	180	103	17	27.8	46	35.05	50	40	3°	
1830 00410195	-195	1	10	195	119	17	29.5	46	35.05	50	40		
1830 00411150	CAT40 -PHC11S -150	1	11	150	73	18	25.7	46	35.05	50	40		
1830 00411165	-165	1	11	165	88	18	27.3	46	35.05	50	40		
1830 00411180	-180	1	11	180	104	18	29.0	46	35.05	50	40		
1830 00411195	-195	1	11	195	119	18	30.5	46	35.05	50	40		
1830 00412150	CAT40 -PHC12S -150	1	12	150	73	19	26.7	46	35.05	70	40		
1830 00412165	-165	1	12	165	88	19	28.3	46	35.05	70	40		
1830 00412180	-180	1	12	180	104	19	30.0	46	35.05	70	40		
1830 00412195	-195	1	12	195	119	19	31.5	46	35.05	70	40		
1830 00416150	CAT40 -PHC16S -150	1	16	150	72	23	30.6	52.5	35.05	75	40		
1830 00416180	-180	1	16	180	103	23	33.8	52.5	35.05	80	40		
1830 00416195	-195	1	16	195	119	23	35.5	52.5	35.05	80	40		
1830 00420150	CAT40 -PHC20S -150	1	20	150	63	28	34.7	62	35.05	70	40		
1830 00420180	-180	1	20	180	93	28	37.8	62	35.05	100	40		
1830 00420195	-195	1	20	195	109	28	39.5	62	35.05	100	40		L-6T
1830 00425150	CAT40 -PHC25S -150	1	25	150	65	37	43.9	62	35.05	70	50		
1830 00425180	-180	1	25	180	96	37	47.1	62	35.05	100	50		
1830 00425195	-195	1	25	195	112	37	48.8	62	35.05	110	50		

1. Tool shank diameter tolerance must be within h6.
2. Do not leave the holder with actuating screw tightened when the chuck is empty.
3. Hex-head screws (included) are necessary to plug air hole for center through coolant feed.

Tightening torque (Torque wrench : p.498)

model	I.D. (d)		Tightening torque (Nm)
	mm	inch	
PHC·S	06 ~ 12, 16	0250 ~ 0500	9 ~ 10
PHC·S	20 ~ 25	—	23 ~ 24

Hex. wrench

P. 095



Ordering Example

CAT40 - PHC 12 S - 150

Shank size | I.D. (d) | Projection length (L)

Inch to Metric (mm) → Inch × 25.4
Metric (mm) to Inch → Metric ÷ 25.4 or Metric × 0.03937

Special / Custom Sizes on request

SRE

Shrink Fit (Small Diameter Type)

● Shrinkage method clamps a cutting tool firmly by heating and cooling the chuck. High precision and strong chucking force. (Small diameter type)

Type 1

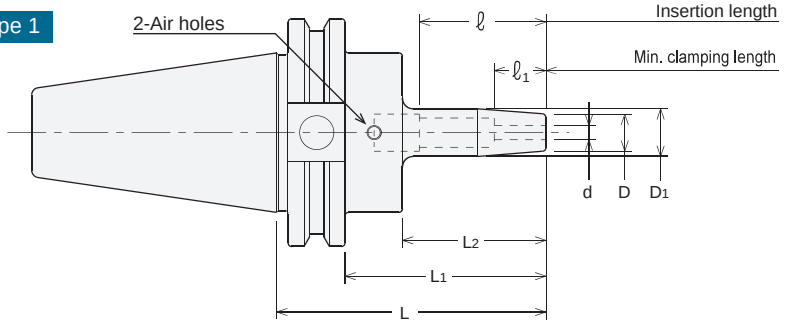

Type 2

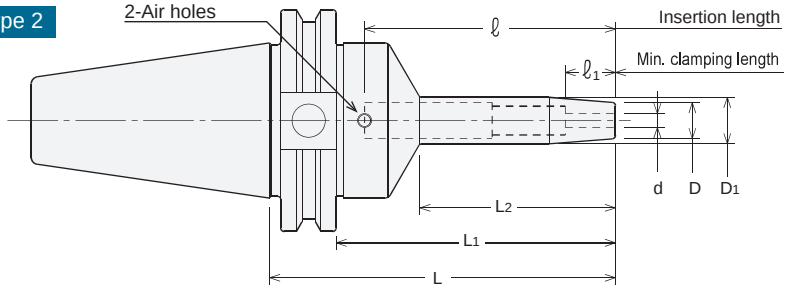

Metric Sizes

Unit : Inch

Code	Model	Type	d (mm)	L	L1	L2	D	D1	D2	ℓ1	ℓ	kg
1940 51403060	CAT40 -SRE3A -60	1	3	2.362	1.612	0.982	0.453	0.571	1.750	0.512	1.024	1.0
1940 51403100	-100	1	3	3.937	3.187	2.557	0.453	0.650	1.750	0.512	2.598	
1940 51403120	-120	1	3	4.724	3.974	3.344	0.453	0.650	1.750	0.512	3.386	
1940 51403135	-135	1	3	5.315	4.565	3.504	0.453	0.650	1.750	0.512	3.976	
1940 51403160	-160	2	3	6.299	5.549	4.488	0.453	0.650	1.750	0.512	4.961	1.1
1940 51404060	CAT40 -SRE4A -60	1	4	2.362	1.612	0.982	0.453	0.571	1.750	0.630	1.024	1.0
1940 51404100	-100	1	4	3.937	3.187	2.557	0.453	0.650	1.750	0.630	2.598	
1940 51404120	-120	1	4	4.724	3.974	3.344	0.453	0.650	1.750	0.630	3.386	
1940 51404135	-135	1	4	5.315	4.565	3.504	0.453	0.650	1.750	0.630	3.976	
1940 51404160	-160	2	4	6.299	5.549	4.488	0.453	0.650	1.750	0.630	4.961	
1940 51405060	CAT40 -SRE5A -60	1	5	2.362	1.612	0.982	0.512	0.630	1.750	0.748	1.024	1.0
1940 51405100	-100	1	5	3.937	3.187	2.557	0.512	0.709	1.750	0.748	2.598	
1940 51405120	-120	1	5	4.724	3.974	3.344	0.512	0.709	1.750	0.748	3.386	
1940 51405135	-135	1	5	5.315	4.565	3.543	0.512	0.709	1.750	0.748	3.976	
1940 51405160	-160	2	5	6.299	5.549	4.528	0.512	0.709	1.750	0.748	4.961	
1940 51406060	CAT40 -SRE6A -60	1	6	2.362	1.612	0.982	0.512	0.630	1.750	1.063	1.024	1.0
1940 51406100	-100	1	6	3.937	3.187	2.557	0.512	0.709	1.750	1.063	2.598	1.1
1940 51406120	-120	1	6	4.724	3.974	3.344	0.512	0.709	1.750	1.063	3.386	
1940 51406135	-135	1	6	5.315	4.565	3.504	0.512	0.709	1.750	1.063	3.976	
1940 51406160	-160	2	6	6.299	5.549	4.488	0.512	0.709	1.750	1.063	4.961	
1940 51408060	CAT40 -SRE8A -60	1	8	2.362	1.612	0.982	0.512	0.630	1.750	1.063	1.024	1.0
1940 51408100	-100	1	8	3.937	3.187	2.557	0.512	0.709	1.750	1.063	2.598	
1940 51408120	-120	1	8	4.724	3.974	3.344	0.512	0.709	1.750	1.063	3.386	
1940 51408135	-135	1	8	5.315	4.565	3.504	0.512	0.709	1.750	1.063	3.976	
1940 51408160	-160	2	8	6.299	5.549	4.488	0.512	0.709	1.750	1.063	4.961	

1.Always use carbide shank tools with h6 tolerance.
2.Use 2pcs. of M4 × 5（S） hex. screw (included) to close air holes on the chuck when internal coolant is used.
3.Center through coolant is not possible with SRE3A and SRE4A.

Heating device chart

heating device	chuck	
	L1 ≦ 2.362"	L1 ＞ 2.362"
ISG3400	Yes *	Yes
SRK-HA1, HB2	No	No

*Special induction coil is needed. Refer to P.500-501.

Ordering Example

CAT40 - SRE 6 A - 120

Shank size | I.D. (d) | Projection length (L)

Inch to Metric (mm) → Inch × 25.4
Metric (mm) to Inch → Metric ÷ 25.4 or Metric × 0.03937

Special / Custom Sizes on request

MEMO

SRD

Shrink Fit (DIN Standard)

● Shrinkage method clamps a cutting tool firmly by heating and cooling the chuck. High precision and strong chucking force. (DIN Type)

Type 1

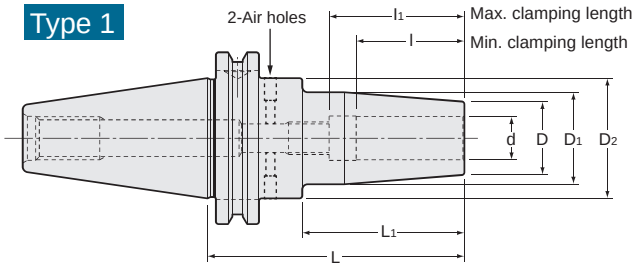

Type 2

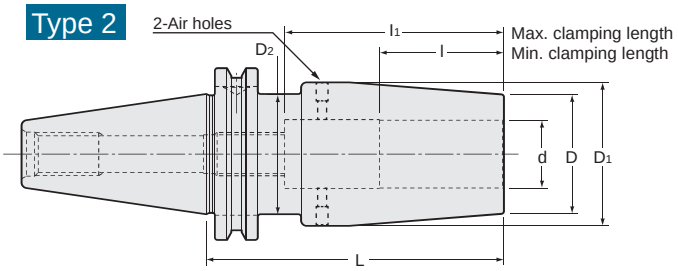

Inch Sizes

Unit : Inch

Code	Model	Type	d	L	L1	D	D1	D2	l	l1	kg
1940 43408095	CAT40 -SRD0250A - 95	1	0.250	3.740	2.360	0.827	1.063	1.750	1.024	1.417	
1940 43408120	-120	1	0.250	4.724	3.344	0.827	1.063	1.750	1.024	1.417	1.3
1940 43408160	-160	1	0.250	6.299	4.919	0.827	1.063	1.750	1.024	1.417	
1940 43410095	CAT40 -SRD0312A - 95	1	0.312	3.740	2.360	0.827	1.063	1.750	1.024	1.969	
1940 43410120	-120	1	0.312	4.724	3.344	0.827	1.063	1.750	1.024	1.969	
1940 43410160	-160	1	0.312	6.299	4.919	0.827	1.063	1.750	1.024	1.969	
1940 43412095	CAT40 -SRD0375A - 95	1	0.375	3.740	2.360	0.945	1.260	1.750	1.260	1.969	1.3
1940 43412120	-120	1	0.375	4.724	3.344	0.945	1.260	1.750	1.260	1.969	
1940 43412160	-160	1	0.375	6.299	4.919	0.945	1.260	1.750	1.260	1.969	
1940 43416095	CAT40 -SRD0500A - 95	1	0.500	3.740	2.360	0.945	1.260	1.750	1.457	2.244	1.2
1940 43416120	-120	1	0.500	4.724	3.344	0.945	1.260	1.750	1.457	2.244	
1940 43416160	-160	1	0.500	6.299	4.919	0.945	1.260	1.750	1.457	2.244	1.6
1940 43420095	CAT40 -SRD0625A - 95	1	0.625	3.740	2.360	1.063	1.339	1.750	1.575	3.150	
1940 43420120	-120	1	0.625	4.724	3.344	1.063	1.339	1.750	1.575	3.150	
1940 43420160	-160	1	0.625	6.299	4.919	1.063	1.339	1.750	1.575	3.150	
1940 43424095	CAT40 -SRD0750A - 95	1	0.750	3.740	2.360	1.299	1.654	1.750	1.575	3.386	
1940 43424120	-120	1	0.750	4.724	3.344	1.299	1.654	1.750	1.575	3.937	
1940 43424160	-160	1	0.750	6.299	4.919	1.299	1.654	1.750	1.575	3.937	
1940 43428095	CAT40 -SRD0875A - 95	1	0.875	3.740	2.360	1.299	1.654	1.750	1.654	3.386	
1940 43428120	-120	1	0.875	4.724	3.344	1.299	1.654	1.750	1.654	3.937	
1940 43428160	-160	1	0.875	6.299	4.919	1.299	1.654	1.750	1.654	3.937	
1940 43432110	CAT40 -SRD1000A -110	2	1.000	4.331	—	1.732	2.087	1.750	1.890	3.780	1.8
1940 43432135	-135	2	1.000	5.315	—	1.732	2.087	1.750	1.890	3.937	
1940 43432160	-160	2	1.000	6.299	—	1.732	2.087	1.750	1.890	3.937	
1940 43440110	CAT40 -SRD1250A -110	2	1.250	4.331	—	1.732	2.087	1.750	1.890	3.780	
1940 43440135	-135	2	1.250	5.315	—	1.732	2.087	1.750	1.890	3.937	
1940 43440160	-160	2	1.250	6.299	—	1.732	2.087	1.750	1.890	3.937	
1940 43508095	CAT50 -SRD0250A - 95	1	0.250	3.740	2.360	0.827	1.063	2.750	1.024	1.417	
1940 43508120	-120	1	0.250	4.724	3.344	0.827	1.063	2.750	1.024	1.417	
1940 43508160	-160	1	0.250	6.299	4.919	0.827	1.063	2.750	1.024	1.417	
1940 43510095	CAT50 -SRD0312A - 95	1	0.312	3.740	2.360	0.827	1.063	2.750	1.024	1.969	
1940 43510120	-120	1	0.312	4.724	3.344	0.827	1.063	2.750	1.024	1.969	3.2
1940 43510160	-160	1	0.312	6.299	4.919	0.827	1.063	2.750	1.024	1.969	3.4
1940 43512095	CAT50 -SRD0375A - 95	1	0.375	3.740	2.360	0.945	1.260	2.750	1.260	1.969	
1940 43512120	-120	1	0.375	4.724	3.344	0.945	1.260	2.750	1.260	1.969	3.4
1940 43512160	-160	1	0.375	6.299	4.919	0.945	1.260	2.750	1.260	1.969	3.6
1940 43516095	CAT50 -SRD0500A - 95	1	0.500	3.740	2.360	0.945	1.260	2.750	1.457	2.244	
1940 43516120	-120	1	0.500	4.724	3.344	0.945	1.260	2.750	1.457	2.244	3.3
1940 43516160	-160	1	0.500	6.299	4.919	0.945	1.260	2.750	1.457	2.244	3.5
1940 43520095	CAT50 -SRD0625A - 95	1	0.625	3.740	2.360	1.063	1.339	2.750	1.575	3.150	
1940 43520120	-120	1	0.625	4.724	3.344	1.063	1.339	2.750	1.575	3.150	
1940 43520160	-160	1	0.625	6.299	4.919	1.063	1.339	2.750	1.575	3.150	3.6
1940 43524095	CAT50 -SRD0750A - 95	1	0.750	3.740	2.360	1.299	1.654	2.750	1.575	3.386	
1940 43524120	-120	1	0.750	4.724	3.344	1.299	1.654	2.750	1.575	3.937	3.6
1940 43524160	-160	1	0.750	6.299	4.919	1.299	1.654	2.750	1.575	3.937	3.9
1940 43528095	CAT50 -SRD0875A - 95	1	0.875	3.740	2.360	1.299	1.654	2.750	1.654	3.386	
1940 43528120	-120	1	0.875	4.724	3.344	1.299	1.654	2.750	1.654	3.937	
1940 43528160	-160	1	0.875	6.299	4.919	1.299	1.654	2.750	1.654	3.937	3.8
1940 43532105	CAT50 -SRD1000A -105	1	1.000	4.134	2.754	1.732	2.087	2.750	1.890	3.780	3.7
1940 43532120	-120	1	1.000	4.724	3.344	1.732	2.087	2.750	1.890	3.937	3.9
1940 43532160	-160	1	1.000	6.299	4.919	1.732	2.087	2.750	1.890	3.937	4.5
1940 43540105	CAT50 -SRD1250A -105	1	1.250	4.134	2.754	1.732	2.087	2.750	1.890	3.937	
1940 43540120	-120	1	1.250	4.724	3.344	1.732	2.087	2.750	1.890	3.937	3.6
1940 43540160	-160	1	1.250	6.299	4.919	1.732	2.087	2.750	1.890	3.937	4.2
1940 43548105	CAT50 -SRD1500A -105	1	1.500	4.134	2.754	1.732	2.087	2.750	1.890	3.937	
1940 43548120	-120	1	1.500	4.724	3.344	1.732	2.087	2.750	1.890	3.937	3.3
1940 43548160	-160	1	1.500	6.299	4.919	1.732	2.087	2.750	1.890	3.937	

1.Always use carbide shank tools with h6 tolerance.

2.Use 2pcs. of M4 × 5(S) hex. screw (included) to close air holes on the chuck when internal coolant is used.

Inch to Metric (mm) → Inch × 25.4
Metric (mm) to Inch → Metric ÷ 25.4 or Metric × 0.03937

Special / Custom Sizes on request

Metric Sizes

Unit : Inch

Code	Model	Type	d (mm)	L	L1	D	D1	D2	l	l1	kg
1940 41406095	CAT40 -SRD6A - 95	1	6	3.740	2.360	0.827	1.063	1.750	1.024	1.417	
1940 41406120	-120	1	6	4.724	3.344	0.827	1.063	1.750	1.024	1.417	1.3
1940 41406160	-160	1	6	6.299	4.919	0.827	1.063	1.750	1.024	1.417	
1940 41408095	CAT40 -SRD8A - 95	1	8	3.740	2.360	0.827	1.063	1.750	1.024	1.969	
1940 41408120	-120	1	8	4.724	3.344	0.827	1.063	1.750	1.024	1.969	
1940 41408160	-160	1	8	6.299	4.919	0.827	1.063	1.750	1.024	1.969	
1940 41410095	CAT40 -SRD10A - 95	1	10	3.740	2.360	0.945	1.260	1.750	1.260	1.969	
1940 41410120	-120	1	10	4.724	3.344	0.945	1.260	1.750	1.260	1.969	1.4
1940 41410160	-160	1	10	6.299	4.919	0.945	1.260	1.750	1.260	1.969	
1940 41412095	CAT40 -SRD12A - 95	1	12	3.740	2.360	0.945	1.260	1.750	1.457	2.756	
1940 41412120	-120	1	12	4.724	3.344	0.945	1.260	1.750	1.457	2.756	
1940 41412160	-160	1	12	6.299	4.919	0.945	1.260	1.750	1.457	2.756	
1940 41414095	CAT40 -SRD14A - 95	1	14	3.740	2.360	1.063	1.339	1.750	1.457	2.756	
1940 41414120	-120	1	14	4.724	3.344	1.063	1.339	1.750	1.457	2.756	
1940 41414160	-160	1	14	6.299	4.919	1.063	1.339	1.750	1.457	2.756	
1940 41416095	CAT40 -SRD16A - 95	1	16	3.740	2.360	1.063	1.339	1.750	1.575	3.150	
1940 41416120	-120	1	16	4.724	3.344	1.063	1.339	1.750	1.575	3.150	
1940 41416160	-160	1	16	6.299	4.919	1.063	1.339	1.750	1.575	3.150	
1940 41418095	CAT40 -SRD18A - 95	1	18	3.740	2.360	1.299	1.654	1.750	1.575	3.150	1.4
1940 41418120	-120	1	18	4.724	3.344	1.299	1.654	1.750	1.575	3.150	
1940 41418160	-160	1	18	6.299	4.919	1.299	1.654	1.750	1.575	3.150	
1940 41420095	CAT40 -SRD20A - 95	1	20	3.740	2.360	1.299	1.654	1.750	1.654	3.386	
1940 41420120	-120	1	20	4.724	3.344	1.299	1.654	1.750	1.654	3.937	
1940 41420160	-160	1	20	6.299	4.919	1.299	1.654	1.750	1.654	3.937	
1940 41425110	CAT40 -SRD25A -110	2	25	4.331	—	1.732	2.087	1.750	1.890	3.780	
1940 41425135	-135	2	25	5.315	—	1.732	2.087	1.750	1.890	3.937	
1940 41425160	-160	2	25	6.299	—	1.732	2.087	1.750	1.890	3.937	
1940 41432110	CAT40 -SRD32A -110	2	32	4.331	—	1.732	2.087	1.750	1.890	3.780	
1940 41432135	-135	2	32	5.315	—	1.732	2.087	1.750	1.890	3.937	
1940 41432160	-160	2	32	6.299	—	1.732	2.087	1.750	1.890	3.937	
1940 41506095	CAT50 -SRD6A - 95	1	6	3.740	2.360	0.827	1.063	2.750	1.024	1.417	
1940 41506120	-120	1	6	4.724	3.344	0.827	1.063	2.750	1.024	1.417	
1940 41506160	-160	1	6	6.299	4.919	0.827	1.063	2.750	1.024	1.417	3.4
1940 41508095	CAT50 -SRD8A - 95	1	8	3.740	2.360	0.827	1.063	2.750	1.024	1.969	
1940 41508120	-120	1	8	4.724	3.344	0.827	1.063	2.750	1.024	1.969	
1940 41508160	-160	1	8	6.299	4.919	0.827	1.063	2.750	1.024	1.969	3.4
1940 41510095	CAT50 -SRD10A - 95	1	10	3.740	2.360	0.945	1.260	2.750	1.260	1.969	
1940 41510120	-120	1	10	4.724	3.344	0.945	1.260	2.750	1.260	1.969	3.4
1940 41510160	-160	1	10	6.299	4.919	0.945	1.260	2.750	1.260	1.969	3.6
1940 41512095	CAT50 -SRD12A - 95	1	12	3.740	2.360	0.945	1.260	2.750	1.457	2.756	
1940 41512120	-120	1	12	4.724	3.344	0.945	1.260	2.750	1.457	2.756	3.3
1940 41512160	-160	1	12	6.299	4.919	0.945	1.260	2.750	1.457	2.756	3.6
1940 41514095	CAT50 -SRD14A - 95	1	14	3.740	2.360	1.063	1.339	2.750	1.457	2.756	
1940 41514120	-120	1	14	4.724	3.344	1.063	1.339	2.750	1.457	2.756	
1940 41514160	-160	1	14	6.299	4.919	1.063	1.339	2.750	1.457	2.756	3.6
1940 41516095	CAT50 -SRD16A - 95	1	16	3.740	2.360	1.063	1.339	2.750	1.575	3.150	3.3
1940 41516120	-120	1	16	4.724	3.344	1.063	1.339	2.750	1.575	3.150	
1940 41516160	-160	1	16	6.299	4.919	1.063	1.339	2.750	1.575	3.150	3.6
1940 41518095	CAT50 -SRD18A - 95	1	18	3.740	2.360	1.299	1.654	2.750	1.575	3.150	
1940 41518120	-120	1	18	4.724	3.344	1.299	1.654	2.750	1.575	3.150	
1940 41518160	-160	1	18	6.299	4.919	1.299	1.654	2.750	1.575	3.150	3.9
1940 41520095	CAT50 -SRD20A - 95	1	20	3.740	2.360	1.299	1.654	2.750	1.654	3.937	
1940 41520120	-120	1	20	4.724	3.344	1.299	1.654	2.750	1.654	3.937	3.6
1940 41520160	-160	1	20	6.299	4.919	1.299	1.654	2.750	1.654	3.937	3.9
1940 41525105	CAT50 -SRD25A -105	1	25	4.134	2.754	1.732	2.087	2.750	1.890	4.331	
1940 41525120	-120	1	25	4.724	3.344	1.732	2.087	2.750	1.890	4.331	
1940 41525160	-160	1	25	6.299	4.919	1.732	2.087	2.750	1.890	4.331	
1940 41532105	CAT50 -SRD32A -105	1	32	4.134	2.754	1.732	2.087	2.750	1.890	4.724	
1940 41532120	-120	1	32	4.724	3.344	1.732	2.087	2.750	1.890	4.724	3.6
1940 41532160	-160	1	32	6.299	4.919	1.732	2.087	2.750	1.890	4.724	4.2

1.Always use carbide shank tools with h6 tolerance.

2.Use 2pcs. of M4 × 5(S) hex. screw (included) to close air holes on the chuck when internal coolant is used.

Ordering Example

CAT40 - SRD 0250 A - 120

CAT40: Shank size; 0250: I.D. (d); 120: Projection length (L)

Ordering Example

CAT40 - SRD 6 A - 120

CAT40: Shank size; 6: I.D. (d); 120: Projection length (L)

Heating device chart

heating device	chuck	
	SRD6A, SRD8A SRD0250A, SRD0312A	SRD10A~SRD32A SRD0375A~SRD1500A
ISG3400	Yes	Yes
SRK-HA1, HB2	No	Yes

SRS

Shrink Fit (Slim Type)

● Shrinkage method clamps a cutting tool firmly by heating and cooling the chuck. High precision and strong chucking force. (Slim Type)

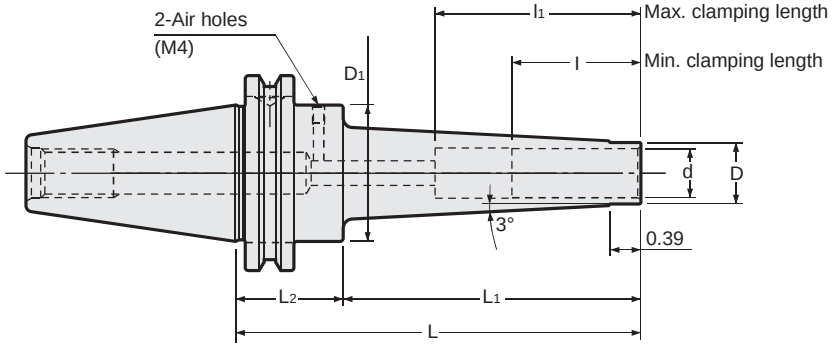

Inch Sizes

Unit : Inch

Code	Model	d	L	L1	L2	D	D1	l1	l	kg
1940 33408105	CAT40 -SRS0250A -105	0.250	4.134	2.756	1.378	0.354	1.750	1.417	1.024	1.1
1940 33408135	-135	0.250	5.315	3.937	1.378	0.354	1.750	1.417	1.024	1.1
1940 33410105	CAT40 -SRS0312A -105	0.312	4.134	2.756	1.378	0.433	1.750	1.969	1.024	1.1
1940 33410135	-135	0.312	5.315	3.937	1.378	0.433	1.750	1.969	1.024	
1940 33412105	CAT40 -SRS0375A -105	0.375	4.134	2.756	1.378	0.512	1.750	1.969	1.260	1.1
1940 33412135	-135	0.375	5.315	3.937	1.378	0.512	1.750	1.969	1.260	1.2
1940 33412165	-165	0.375	6.496	5.118	1.378	0.512	1.750	1.969	1.260	1.3
1940 33416105	CAT40 -SRS0500A -105	0.500	4.134	2.756	1.378	0.591	1.750	2.756	1.457	1.1
1940 33416135	-135	0.500	5.315	3.937	1.378	0.591	1.750	2.756	1.457	1.2
1940 33416165	-165	0.500	6.496	5.118	1.378	0.591	1.750	2.756	1.457	1.3
1940 33420105	CAT40 -SRS0625A -105	0.625	4.134	2.756	1.378	0.787	1.750	3.150	1.575	1.1
1940 33420135	-135	0.625	5.315	3.937	1.378	0.787	1.750	3.150	1.575	1.2
1940 33420165	-165	0.625	6.496	5.118	1.378	0.787	1.750	3.150	1.575	1.4
1940 33424105	CAT40 -SRS0750A -105	0.750	4.134	2.756	1.378	1.024	1.750	3.937	1.654	1.2
1940 33424135	-135	0.750	5.315	3.937	1.378	1.024	1.750	3.937	1.654	1.4
1940 33424165	-165	0.750	6.496	5.118	1.378	1.024	1.750	3.937	1.654	1.6
1940 33508105	CAT50 -SRS0250A -105	0.250	4.134	2.756	1.378	0.354	2.750	1.417	1.024	3
1940 33508135	-135	0.250	5.315	3.937	1.378	0.354	2.750	1.417	1.024	3
1940 33508165	-165	0.250	6.496	5.118	1.378	0.354	2.750	1.417	1.024	
1940 33510105	CAT50 -SRS0312A -105	0.312	4.134	2.756	1.378	0.433	2.750	1.969	1.024	
1940 33510135	-135	0.312	5.315	3.937	1.378	0.433	2.750	1.969	1.024	
1940 33510165	-165	0.312	6.496	5.118	1.378	0.433	2.750	1.969	1.024	
1940 33512105	CAT50 -SRS0375A -105	0.375	4.134	2.756	1.378	0.512	2.750	1.969	1.260	
1940 33512135	-135	0.375	5.315	3.937	1.378	0.512	2.750	1.969	1.260	
1940 33512165	-165	0.375	6.496	5.118	1.378	0.512	2.750	1.969	1.260	3.2
1940 33512195	-195	0.375	7.677	6.299	1.378	0.512	2.750	1.969	1.260	
1940 33516105	CAT50 -SRS0500A -105	0.500	4.134	2.756	1.378	0.591	2.750	2.756	1.457	3.1
1940 33516135	-135	0.500	5.315	3.937	1.378	0.591	2.750	2.756	1.457	3.1
1940 33516165	-165	0.500	6.496	5.118	1.378	0.591	2.750	2.756	1.457	3.3
1940 33516195	-195	0.500	7.677	6.299	1.378	0.591	2.750	2.756	1.457	3.4
1940 33520105	CAT50 -SRS0625A -105	0.625	4.134	2.756	1.378	0.787	2.750	3.150	1.575	
1940 33520135	-135	0.625	5.315	3.937	1.378	0.787	2.750	3.150	1.575	3.2
1940 33520165	-165	0.625	6.496	5.118	1.378	0.787	2.750	3.150	1.575	
1940 33520195	-195	0.625	7.677	6.299	1.378	0.787	2.750	3.150	1.575	
1940 33524105	CAT50 -SRS0750A -105	0.750	4.134	2.756	1.378	1.024	2.750	3.937	1.654	
1940 33524135	-135	0.750	5.315	3.937	1.378	1.024	2.750	3.937	1.654	
1940 33524165	-165	0.750	6.496	5.118	1.378	1.024	2.750	3.937	1.654	3.5
1940 33524195	-195	0.750	7.677	6.299	1.378	1.024	2.750	3.937	1.654	

1.Always use carbide shank tools with h6 tolerance.
2.Use 2pcs. of M4 × 5(S)hex. screw (included) to close air holes on the chuck when internal coolant is used.

Ordering Example

CAT40 - SRS 0250 A - 105

CAT40: Shank size
0250: I.D. (d)
105: Projection length (L)

Inch to Metric (mm) → Inch × 25.4
Metric (mm) to Inch → Metric ÷ 25.4 or Metric × 0.03937

Special / Custom Sizes on request

Metric Sizes

Unit : Inch

Code	Model	d (mm)	L	L1	L2	D	D1	l1	l	kg
1940 31406105	CAT40 -SRS6A -105	6	4.134	2.756	1.378	0.354	1.750	1.417	1.024	1.0
1940 31406135	-135	6	5.315	3.937	1.378	0.354	1.750	1.417	1.024	
1940 31408105	CAT40 -SRS8A -105	8	4.134	2.756	1.378	0.433	1.750	1.969	1.024	1.1
1940 31408135	-135	8	5.315	3.937	1.378	0.433	1.750	1.969	1.024	
1940 31410105	CAT40 -SRS10A -105	10	4.134	2.756	1.378	0.512	1.750	1.969	1.260	1.1
1940 31410135	-135	10	5.315	3.937	1.378	0.512	1.750	1.969	1.260	
1940 31410165	-165	10	6.496	5.118	1.378	0.512	1.750	1.969	1.260	
1940 31412105	CAT40 -SRS12A -105	12	4.134	2.756	1.378	0.591	1.750	2.756	1.457	1.1
1940 31412135	-135	12	5.315	3.937	1.378	0.591	1.750	2.756	1.457	
1940 31412165	-165	12	6.496	5.118	1.378	0.591	1.750	2.756	1.457	1.3
1940 31416105	CAT40 -SRS16A -105	16	4.134	2.756	1.378	0.787	1.750	3.150	1.575	
1940 31416135	-135	16	5.315	3.937	1.378	0.787	1.750	3.150	1.575	
1940 31416165	-165	16	6.496	5.118	1.378	0.787	1.750	3.150	1.575	
1940 31420105	CAT40 -SRS20A -105	20	4.134	2.756	1.378	1.024	1.750	3.937	1.654	
1940 31420135	-135	20	5.315	3.937	1.378	1.024	1.750	3.937	1.654	
1940 31420165	-165	20	6.496	5.118	1.378	1.024	1.750	3.937	1.654	
1940 31506105	CAT50 -SRS6A -105	6	4.134	2.756	1.378	0.354	2.750	1.417	1.024	
1940 31506135	-135	6	5.315	3.937	1.378	0.354	2.750	1.417	1.024	
1940 31506165	-165	6	6.496	5.118	1.378	0.354	2.750	1.417	1.024	
1940 31508105	CAT50 -SRS8A -105	8	4.134	2.756	1.378	0.433	2.750	1.969	1.024	
1940 31508135	-135	8	5.315	3.937	1.378	0.433	2.750	1.969	1.024	
1940 31508165	-165	8	6.496	5.118	1.378	0.433	2.750	1.969	1.024	
1940 31510105	CAT50 -SRS10A -105	10	4.134	2.756	1.378	0.512	2.750	1.969	1.260	3.0
1940 31510135	-135	10	5.315	3.937	1.378	0.512	2.750	1.969	1.260	
1940 31510165	-165	10	6.496	5.118	1.378	0.512	2.750	1.969	1.260	
1940 31510195	-195	10	7.677	6.299	1.378	0.512	2.750	1.969	1.260	3.3
1940 31512105	CAT50 -SRS12A -105	12	4.134	2.756	1.378	0.591	2.750	2.756	1.457	
1940 31512135	-135	12	5.315	3.937	1.378	0.591	2.750	2.756	1.457	3.1
1940 31512165	-165	12	6.496	5.118	1.378	0.591	2.750	2.756	1.457	
1940 31512195	-195	12	7.677	6.299	1.378	0.591	2.750	2.756	1.457	3.4
1940 31516105	CAT50 -SRS16A -105	16	4.134	2.756	1.378	0.787	2.750	3.150	1.575	
1940 31516135	-135	16	5.315	3.937	1.378	0.787	2.750	3.150	1.575	
1940 31516165	-165	16	6.496	5.118	1.378	0.787	2.750	3.150	1.575	3.4
1940 31516195	-195	16	7.677	6.299	1.378	0.787	2.750	3.150	1.575	
1940 31520105	CAT50 -SRS20A -105	20	4.134	2.756	1.378	1.024	2.750	3.937	1.654	
1940 31520135	-135	20	5.315	3.937	1.378	1.024	2.750	3.937	1.654	
1940 31520165	-165	20	6.496	5.118	1.378	1.024	2.750	3.937	1.654	
1940 31520195	-195	20	7.677	6.299	1.378	1.024	2.750	3.937	1.654	

1.Always use carbide shank tools with h6 tolerance.
2.Use 2pcs. of M4 × 5(S) hex. screw (included) to close air holes on the chuck when internal coolant is used.

Heating device chart

heating device	chuck	
	SRS0250A, SRS0312A SRS6A, SRS8A	SRS0375A~SRS0750A SRS10A~SRS20A
ISG3400	Yes	Yes
SRK-HA1, HB2	No	Yes

Ordering Example

CAT40 - SRS 12 A - 105

- CAT40: Shank size
- 12: I.D. (d)
- 105: Projection length (L)

Inch to Metric (mm) → Inch × 25.4
Metric (mm) to Inch → Metric ÷ 25.4 or Metric × 0.03937

Special / Custom Sizes on request

STM

Synchronous Tap Holder With Easy Tool Length Adjustment

● Projection length of the cutting tool can be adjusted by simply turning circumference of the holder.

Type1

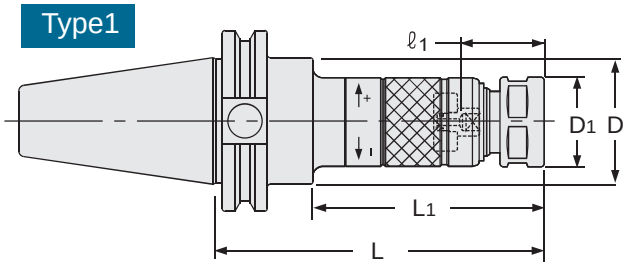

Type2

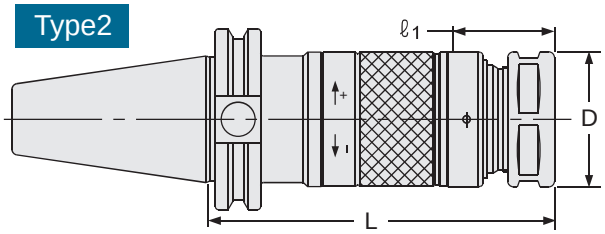

⚠ For capable tap sizes, please refer to P.462-464 chart.

（NOTE）Nut O.D. of STM8 is 0.748".

STM Holder + Collet + STS Driver

Unit : Inch

Code	Model	Type	Tap Size	L	L1	D	D1	kg	Nut	Collet	Preset Driver	Spanner
1880 00400090	CAT40 -STM8 -90 ✻	1	Old JIS Taps M4-8 U No8-5/16 OSG Synchro Taps M4-6	3.543	2.126	1.752	0.827		KDP-1414	FDC-07	STS-8	Flat 17mm width
1880 00400105	-105	1		4.134	2.717	1.752	0.827	1.1				
1880 00400120	-120	1		4.724	3.307	1.752	0.827	1.2				
1880 00400135	-135	1		5.315	4.291	1.752	0.827	1.2				
1880 00400150	-150	1		5.906	4.882	1.752	0.827					
1880 10400090	CAT40 -STM12 -90 ✻	1	Old JIS Taps M4-12 U No8-7/16 PT1/8 OSG Synchro Taps M4-10	3.543	2.126	1.752	1.024	1.2	HTP-09	FSC-09	STS-12	S-1L
1880 10400105	-105	1		4.134	2.717	1.752	1.024	1.2				
1880 10400120	-120	1		4.724	3.307	1.752	1.024	1.2				
1880 10400135	-135	1		5.315	4.291	1.752	1.024	1.3				
1880 10400150	-150	1		5.906	4.882	1.752	1.024					
1880 10400180	-180	1		7.087	6.063	1.752	1.024					
1880 30400105	CAT40 -STM18 -105	1	Old JIS Taps M14-18 U1/2-3/4 PT1/4-3/8 OSG Synchro Taps M12-14	4.134	2.717	1.752	1.417	1.3	HTP-16	FSC-16	STS-18	S-4L
1880 30400120	-120	1		4.724	3.307	1.752	1.417	1.4				
1880 30400135	-135	1		5.315	4.291	1.752	1.417	1.5				
1880 30400150	-150	1		5.906	4.882	1.752	1.417					
1880 30400180	-180	1		7.087	6.063	1.752	1.417					
1880 40400120	CAT40 -STM30 -120	2	Old JIS Taps M20-30 U7/8-1-1/8 PT1/2-3/4 OSG Synchro Taps M16-27	4.724	—	1.811	—	1.6	HTP-22	FSC-22	STS-30	S-5L
1880 40400135	-135	2		5.315	—	1.811	—	1.8				
1880 40400150	-150	2		5.906	—	1.811	—	1.9				
1880 40400180	-180	2		7.087	—	1.811	—					
1880 00500090	CAT50 -STM8 -90 ✻	1	Old JIS Taps M4-8 U No8-5/16 OSG Synchro Taps M4-6	3.543	2.126	2.752	0.827		KDP-1414	FDC-07	STS-8	Flat 17mm width
1880 00500105	-105	1		4.134	2.717	2.752	0.827	3.1				
1880 00500120	-120	1		4.724	3.307	2.752	0.827	3.1				
1880 00500135	-135	1		5.315	4.291	2.752	0.827	3.2				
1880 00500150	-150	1		5.906	4.882	2.752	0.827					
1880 00500165	-165	1		6.496	5.472	2.752	0.827					
1880 10500090	CAT50 -STM12 -90 ✻	1	Old JIS Taps M4-12 U No8-7/16 PT1/8 OSG Synchro Taps M4-10	3.543	2.126	2.752	1.024		HTP-09	FSC-09	STS-12	S-1L
1880 10500105	-105	1		4.134	2.717	2.752	1.024	3.2				
1880 10500120	-120	1		4.724	3.307	2.752	1.024	3.2				
1880 10500135	-135	1		5.315	4.291	2.752	1.024	3.3				
1880 10500150	-150	1		5.906	4.882	2.752	1.024					
1880 10500180	-180	1		7.087	6.063	2.752	1.024	3.4				
1880 30500105	CAT50 -STM18 -105	1	Old JIS Taps M14-18 U1/2-3/4 PT1/4-3/8 OSG Synchro Taps M12-14	4.134	2.717	2.752	1.417	3.3	HTP-16	FSC-16	STS-18	S-4L
1880 30500120	-120	1		4.724	3.307	2.752	1.417	3.4				
1880 30500135	-135	1		5.315	4.291	2.752	1.417	3.5				
1880 30500150	-150	1		5.906	4.882	2.752	1.417					
1880 30500180	-180	1		7.087	6.063	2.752	1.417	3.8				
1880 40500120	CAT50 -STM30 -120	1	Old JIS Taps M20-30 U7/8-1-1/8 PT1/2-3/4 OSG Synchro Taps M16-27	4.724	3.307	2.752	1.811	3.5	HTP-22	FSC-22	STS-30	S-5L
1880 40500135	-135	1		5.315	4.291	2.752	1.811	3.7				
1880 40500150	-150	1		5.906	4.882	2.752	1.811	3.9				
1880 40500180	-180	1		7.087	6.063	2.752	1.811					
1880 40500210	-210	1		8.268	7.244	2.752	1.811					

1.Collet, spanner and preset driver are sold separately.
2.Please see next page for ℓ1 dimension.
3.Tap holes smaller than M4 can be made by STM8. Collets to be used are as follows.
M1-M2.6: FDC-03007- ※※ M3-M3.5: FDC-04007- ※※
Tap drive will not be used for the above usages.

Ordering Example

CAT40 - STM 8 - 90
Shank size / Holder size / Projection length (L)

Inch to Metric (mm) → Inch × 25.4
Metric (mm) to Inch → Metric ÷ 25.4 or Metric × 0.03937

Special / Custom Sizes on request

ℓ1 Dimension for STM

Old JIS Taps (Unit : Inch)

Without center-through coolant		
Tap Size	ℓ1	ℓ1(＊)
M4 ~ 6 U No.8 ~ 1/4	0.82 ~ 1.37	0.82 ~ 1.02
M7 ~ 12 U 5/16 ~ U7/16 PT1/8	0.90 ~ 1.45	0.90 ~ 1.10
M13 ~ 15 U 1/2 ~ 5/8 PT1/4	1.10 ~ 1.65	—
M16 ~ 17	1.25 ~ 1.77	—
M18 ~ 27 U 3/4 ~ U1 PT3/8 ~ 5/8	1.29 ~ 1.85	—
M30 U1-1/8 PT3/4	1.49 ~ 2.04	—

With center-through coolant (STM8)		
Tap Size	ℓ1	ℓ1(＊)
M4 ~ 6 U No.8 ~ 1/4	0.98 ~ 1.37	0.98 ~ 1.02
M7 ~ 8 U5/16	1.02 ~ 1.45	1.02 ~ 1.10

With center-through coolant (STM12 ~ 30)		
Tap Size	ℓ1	ℓ1(＊)
M4 ~ 6 U No.8 ~ 1/4	0.94 ~ 1.37	0.94 ~ 1.02
M7 ~ 10 U 5/16 ~ 3/8	0.98 ~ 1.45	0.98 ~ 1.10
M11 ~ 12 U 7/16 PT 1/8	1.02 ~ 1.45	1.02 ~ 1.10
U1/2	1.25 ~ 1.65	—
M13 ~ 15 U9/16	1.29 ~ 1.65	—
U5/8 PT1/4	1.33 ~ 1.65	—
M16	1.37 ~ 1.81	—
M18 U 3/4 PT3/8	1.41 ~ 1.85	—
M20 ~ 21 PT1/2	1.57 ~ 1.85	—
M22 U 7/8	1.61 ~ 1.85	—
M23	1.65 ~ 1.85	—
M24 ~ 25 PT5/8	1.69 ~ 1.85	—
M26 ~ 27 U1	1.73 ~ 1.85	—
M28	1.77 ~ 2.04	—
M30 PT3/4	1.81 ~ 2.04	—
U 1-1/8	1.88 ~ 2.04	—

OSG Synchro Taps (Unit : Inch)

Without center-through coolant		
Tap Size	ℓ1	ℓ1(＊)
M4 ~ 6	0.82 ~ 1.37	0.82 ~ 1.02
M8 ~ 10	0.90 ~ 1.45	0.90 ~ 1.10
M12 ~ 14	1.10 ~ 1.65	—
M16 ~ 27	1.29 ~ 1.85	—

With center-through coolant (STM8)		
Tap Size	ℓ1	ℓ1(＊)
M4 ~ 6	0.98 ~ 1.37	0.98 ~ 1.02

With center-through coolant (STM12 ~ 30)		
Tap Size	ℓ1	ℓ1(＊)
M4 ~ 6	0.94 ~ 1.37	0.94 ~ 1.02
M8 ~ 10	1.02 ~ 1.45	1.02 ~ 1.10
M12	1.29 ~ 1.65	—
M14	1.33 ~ 1.65	—
M16 ~ 20	1.57 ~ 1.81	—
M22 ~ 27	1.73 ~ 1.85	—

YAMAWA X Series (Unit : Inch)

Without center-through coolant		
Tap Size	ℓ1	ℓ1(＊)
M6 M8	0.90 ~ 1.45	0.90 ~ 1.10
M10 M12	1.10 ~ 1.65	—

With center-through coolant (STM8)		
Tap Size	ℓ1	ℓ1(＊)
M6	1.02 ~ 1.45	1.02 ~ 1.10

With center-through coolant (STM12 ~ 30)		
Tap Size	ℓ1	ℓ1(＊)
M6	0.98 ~ 1.45	0.98 ~ 1.10
M8	1.02 ~ 1.45	1.02 ~ 1.10
M10	1.29 ~ 1.65	—
M12	1.33 ~ 1.65	—

Collet
P. 226

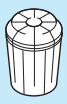

Preset driver
P. 224-225

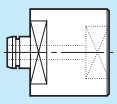

Inch to Metric (mm) → Inch × 25.4
Metric (mm) to Inch → Metric ÷ 25.4 or Metric × 0.03937

Special / Custom Sizes on request

Tap size reference chart (collet, preset driver)

FDC-07 or FSC - collet

OH Type

● OH type collet should be used for center-through coolant feeding and external coolant feeding.

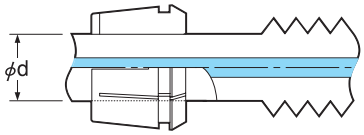

C Type

● when "collet-through" coolant feeding is needed.

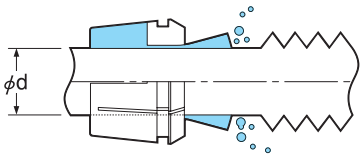

B : Square dimension **ød : Shank dimension**

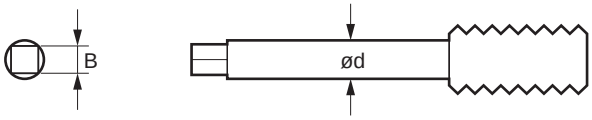

※ Please select OH type for non-coolant use.

preset driver & tool for changing driver

STS Type

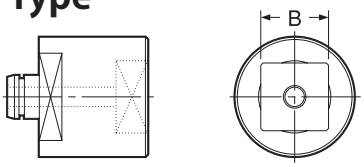

STS-R Type

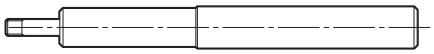

Holder Model	Tap Size (ANSI)	ød (inch)	ød (mm)	Collet Model (OH or C)	B (inch)	B (mm)	Preset Driver
STM8	#0-6	0.141	3.5814	FDC-03607**	0.110	2.794	STS8- □ 2.8
	#8	0.168	4.2672	FDC-04307**	0.131	3.3274	STS8- □ 3.4
	#10	0.194	4.9276	FDC-05007**	0.152	3.8608	STS8- □ 4.0
	#12	0.22	5.588	FDC-05607**	0.165	4.191	STS8- □ 4.2
	1/4	0.255	6.477	FDC-06507**	0.191	4.8514	STS8- □ 5.0
STM12	#0-6	0.141	3.5814	FSC-09-3.6**	0.110	2.794	STS12- □ 2.8
	#8	0.168	4.2672	FSC-09-4.3**	0.131	3.3274	STS12- □ 3.4
	#10	0.194	4.9276	FSC-09-5.0**	0.152	3.8608	STS12- □ 4.0
	#12	0.22	5.588	FSC-09-5.6**	0.165	4.191	STS12- □ 4.2
	1/4	0.255	6.477	FSC-09-6.5**	0.191	4.8514	STS12- □ 5.0
	1/8SPT	0.313	7.9502	FSC-09-8.0**	0.234	5.9436	STS12- □ 6.0
	5/16	0.318	8.0772	FSC-09-8.1**	0.238	6.0452	STS12- □ 6.1
	7/16	0.323	8.2042	FSC-09-8.3**	0.242	6.1468	STS12- □ 6.2
STM18	1/2	0.367	9.3218	FSC-16-9.4**	0.275	6.985	STS18- □ 7.0
	3/8	0.381	9.6774	FSC-16-9.7**	0.286	7.2644	STS18- □ 7.3
	9/16	0.429	10.8966	FSC-16-10.9**	0.322	8.1788	STS18- □ 8.2
	1/8LPT	0.437	11.0998	FSC-16-11.1**	0.328	8.3312	STS18- □ 8.4
	5/8	0.48	12.192	FSC-16-12.2**	0.360	9.144	STS18- □ 9.2
	11/16	0.542	13.7668	FSC-16-13.8**	0.406	10.3124	STS18- □ 10.4
	1/4PT	0.562	14.2748	FSC-16-14.3**	0.421	10.6934	STS18- □ 10.7
STM30	3/4	0.59	14.986	FSC-22-15.0**	0.442	11.2268	STS30- □ 11.3
	13/16	0.652	16.5608	FSC-22-16.6**	0.489	12.4206	STS30- □ 12.5
	7/8	0.697	17.7038	FSC-22-17.8**	0.523	13.2842	STS30- □ 13.3
	3/8PT	0.7	17.78	FSC-22-17.8**	0.531	13.4874	STS30- □ 13.5
	1	0.8	20.32	FSC-22-20.4**	0.600	15.24	STS30- □ 15.3

For DIN and ISO, please refer to P.463-464.

Ordering Example

FSC - 22 - 20.4 - OH

- 22: Collet size
- 20.4: Collet I.D. (d)
- OH: for tool with coolant hole; C: for collet through

Combination of accessories

Tap holder	Collet	Preset driver		Nut		Tool changing driver		Spanner	
Model	Model	Model	Code	Model	Code	Model	Code	Model	Code
STM8	**FDC-07**	STS8	3914 0100**03	KDP-1414	0070 01001407	**STS-R0**	3914 00000006	**Flat 17mm width**	
STM12	**FSC-09**	STS12	3914 1100**03	**HTP-09**	1314 00000009	**STS-R1**	3914 10000006	**S-1L**	0803 00000011
STM18	**FSC-16**	STS18	3914 310***03	**HTP-16**	1314 00000016	**STS-R2**	3914 30000006	**S-4L**	0803 00000014
STM30	**FSC-22**	STS30	3914 410***03	**HTP-22**	1314 00000022	**STS-R2**	3914 30000006	**S-5L**	0803 00000015

Inch to Metric (mm) → Inch × 25.4
Metric (mm) to Inch → Metric ÷ 25.4 or Metric × 0.03937

Special / Custom Sizes on request

Tap size reference chart (collet, preset driver)

FDC-07 or FSC - collet

OH Type

● OH type collet should be used for center-through coolant feeding and external coolant feeding.

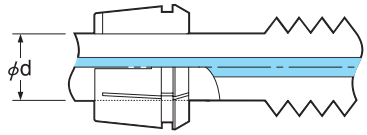

C Type

● when "collet-through" coolant feeding is needed.

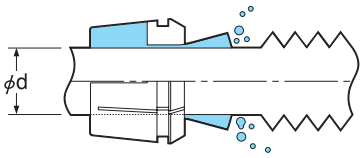

※ Please select OH type for non-coolant use.

preset driver & tool for changing driver

STS Type

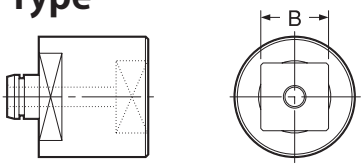

STS-R Type

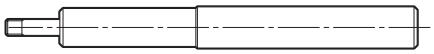

Holder Model	Tap Size					ød	Collet Model (OH or C)	B	Preset Driver	Tool for Changing Driver
	Old JIS Taps			OSG Synchro-Taps	YAMAWA X Series					
	Metric Thread	Unified Thread	Pipe Taper Thread							
STM8	M4~M4.5	UNo.8				5.0	FDC-05007-**	4.0	STS8-□4.0	STS-R0
	M5~M5.5	UNo.10~12				5.5	FDC-05507-**	4.5	STS8-□4.5	STS-R0
	M6	U1/4		M4~M6		6.0	FDC-06007-**	4.5	STS8-□4.5	STS-R0
					M6	6.0	FDC-06007-**	4.9	STS8-□4.9	STS-R0
		U5/16				6.1	FDC-06107-**	5.0	STS8-□5.0	STS-R0
	M7~8					6.2	FDC-06207-**	5.0	STS8-□5.0	STS-R0
STM12	M4~M4.5	UNo.8				5.0	FSC-09-5.0-**	4.0	STS12-□4.0	STS-R1
	M5~M5.5	UNo.10~12				5.5	FSC-09-5.5-**	4.5	STS12-□4.5	STS-R1
	M6	U1/4		M4~M6		6.0	FSC-09-6.0-**	4.5	STS12-□4.5	STS-R1
					M6	6.0	FSC-09-6.0-**	4.9	STS12-□4.9	STS-R1
		U5/16				6.1	FSC-09-6.1-**	5.0	STS12-□5.0	STS-R1
	M7~8					6.2	FSC-09-6.2-**	5.0	STS12-□5.0	STS-R1
	M9~M10	U3/8				7.0	FSC-09-7.0-**	5.5	STS12-□5.5	STS-R1
					M8	8.0	FSC-09-8.0-**	6.2	STS12-□6.2	STS-R1
	M11	U7/16	PT1/16~1/8	M8~M10		8.0	FSC-09-8.0-**	6.0	STS12-□6.0	STS-R1
	M12					8.5	FSC-09-8.5-**	6.5	STS12-□6.5	STS-R1
STM18		U1/2				9.0	FSC-16-9.0-**	7.0	STS18-□7.0	STS-R2
	M13					9.5	FSC-16-9.5-**	7.0	STS18-□7.0	STS-R2
				M12	M10	10.0	FSC-16-10.0-**	8.0	STS18-□8.0	STS-R2
	M14~15	U9/16				10.5	FSC-16-10.5-**	8.0	STS18-□8.0	STS-R2
			PT1/4			11.0	FSC-16-11.0-**	9.0	STS18-□9.0	STS-R2
		U5/8		M14	M12	12.0	FSC-16-12.0-**	9.0	STS18-□9.0	STS-R2
	M16					12.5	FSC-16-12.5-**	10.0	STS18-□10.0	STS-R2
	M17					13.0	FSC-16-13.0-**	10.0	STS18-□10.0	STS-R2
	M18~M19	U3/4	PT3/8			14.0	FSC-16-14.0-**	11.0	STS18-□11.0	STS-R2
STM30	M20					15.0	FSC-22-15.0-**	12.0	STS30-□12.0	STS-R2
	M21			M16~M20		16.0	FSC-22-16.0-**	12.0	STS30-□12.0	STS-R2
	M22	U7/8				17.0	FSC-22-17.0-**	13.0	STS30-□13.0	STS-R2
	M23		PT1/2			18.0	FSC-22-18.0-**	14.0	STS30-□14.0	STS-R2
	M24~M25		PT5/8			19.0	FSC-22-19.0-**	15.0	STS30-□15.0	STS-R2
	M26~M27	U1		M22~M27		20.0	FSC-22-20.0-**	15.0	STS30-□15.0	STS-R2
	M28					21.0	FSC-22-21.0-**	17.0	STS30-□17.0	STS-R2
		U1-1/8				22.0	FSC-22-22.0-**	17.0	STS30-□17.0	STS-R2
	M30		PT3/4			23.0	FSC-22-23.0-**	17.0	STS30-□17.0	STS-R2

Ordering Example

FSC - 22 - 20.0 - OH

- 22: Collet size
- 20.0: Collet I.D. (d)
- OH: for tool with coolant hole; C: for collet through

Combination of accessories

Tap holder	Collet	Preset driver		Nut		Tool changing driver		Spanner	
Model	Model	Model	Code	Model	Code	Model	Code	Model	Code
STM8	FDC-07	STS8	3914 0100**03	KDP-1414	0070 01001407	STS-R0	3914 00000006	Flat 17mm width	
STM12	FSC-09	STS12	3914 1100**03	HTP-09	1314 00000009	STS-R1	3914 10000006	S-1L	0803 00000011
STM18	FSC-16	STS18	3914 310***03	HTP-16	1314 00000016	STS-R2	3914 30000006	S-4L	0803 00000014
STM30	FSC-22	STS30	3914 410***03	HTP-22	1314 00000022	STS-R2	3914 30000006	S-5L	0803 00000015

Inch to Metric (mm) → Inch × 25.4
Metric (mm) to Inch → Metric ÷ 25.4 or Metric × 0.03937

Special / Custom Sizes on request

FSC

Collet For Tapper

FSC-OH

For tool with coolant hole

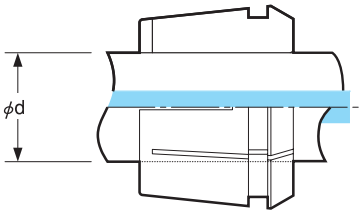

Tool Shank Dia.		Size	Code
ød (inch)	ød (mm)		
ø 0.141	ø 3.6	**FSC-09-3.6-OH**	—
ø 0.168	ø 4.3	**FSC-09-4.3-OH**	1334 00104309
ø 0.194	ø 5.0	**FSC-09-5.0-OH**	1334 00105009
ø 0.220	ø 5.6	**FSC-09-5.6-OH**	1334 00105609
ø 0.216	ø 5.5	**FSC-09-5.5-OH**	1334 00105509
ø 0.236	ø 6.0	**FSC-09-6.0-OH**	1334 00106009
ø 0.240	ø 6.1	**FSC-09-6.1-OH**	1334 00106109
ø 0.244	ø 6.2	**FSC-09-6.2-OH**	1334 00106209
ø 0.255	ø 6.5	**FSC-09-6.5-OH**	1334 00106509
ø 0.275	ø 7.0	**FSC-09-7.0-OH**	1334 00107009
ø 0.314	ø 8.0	**FSC-09-8.0-OH**	1334 00108009
ø 0.313	ø 8.0	**FSC-09-8.0-OH**	1334 00108009
ø 0.318	ø 8.1	**FSC-09-8.1-OH**	1334 00108109
ø 0.323	ø 8.3	**FSC-09-8.3-OH**	1334 00108309
ø 0.334	ø 8.5	**FSC-09-8.5-OH**	1334 00108509
ø 0.354	ø 9.0	**FSC-16-9.0-OH**	1334 00109016
ø 0.367	ø 9.4	**FSC-16-9.4-OH**	1334 00109416
ø 0.374	ø 9.5	**FSC-16-9.5-OH**	1334 00109516
ø 0.381	ø 9.7	**FSC-16-9.7-OH**	1334 00109716
ø 0.393	ø 10.0	**FSC-16-10.0-OH**	1334 00110016
ø 0.413	ø 10.5	**FSC-16-10.5-OH**	1334 00110516
ø 0.429	ø 10.9	**FSC-16-10.9-OH**	1334 00110916
ø 0.433	ø 11.0	**FSC-16-11.0-OH**	1334 00111016
ø 0.437	ø 11.1	**FSC-16-11.1-OH**	1334 00111116
ø 0.472	ø 12.0	**FSC-16-12.0-OH**	1334 00112016
ø 0.480	ø 12.2	**FSC-16-12.2-OH**	1334 00112216
ø 0.492	ø 12.5	**FSC-16-12.5-OH**	1334 00112516
ø 0.511	ø 13.0	**FSC-16-13.0-OH**	1334 00113016
ø 0.542	ø 13.8	**FSC-16-13.8-OH**	1334 00113816
ø 0.551	ø 14.0	**FSC-16-14.0-OH**	1334 00114016
ø 0.562	ø 14.3	**FSC-16-14.3-OH**	1334 00114316
ø 0.590	ø 15.0	**FSC-22-15.0-OH**	1334 00115022
ø 0.629	ø 16.0	**FSC-22-16.0-OH**	1334 00116022
ø 0.652	ø 16.6	**FSC-22-16.6-OH**	1334 00116622
ø 0.669	ø 17.0	**FSC-22-17.0-OH**	1334 00117022
ø 0.697	ø 17.8	**FSC-22-17.8-OH**	1334 00117822
ø 0.700	ø 17.8	**FSC-22-17.8-OH**	1334 00117822
ø 0.708	ø 18.0	**FSC-22-18.0-OH**	1334 00118022
ø 0.748	ø 19.0	**FSC-22-19.0-OH**	1334 00119022
ø 0.800	ø 20.4	**FSC-22-20.4-OH**	1334 00120422
ø 0.787	ø 20.0	**FSC-22-20.0-OH**	1334 00120022
ø 0.826	ø 21.0	**FSC-22-21.0-OH**	1334 00121022
ø 0.866	ø 22.0	**FSC-22-22.0-OH**	1334 00122022
ø 0.905	ø 23.0	**FSC-22-23.0-OH**	1334 00123022

FSC-C

For Collet through

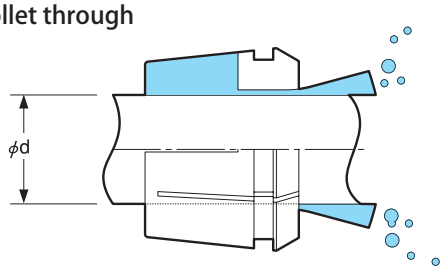

Tool Shank Dia.		Size	Code
ød (inch)	ød (mm)		
ø 0.141	ø 3.6	**FSC-09-3.6-C**	—
ø 0.168	ø 4.3	**FSC-09-4.3-C**	1335 00104309
ø 0.194	ø 5.0	**FSC-09-5.0-C**	1335 00105009
ø 0.220	ø 5.6	**FSC-09-5.6-C**	1335 00105609
ø 0.216	ø 5.5	**FSC-09-5.5-C**	1335 00105509
ø 0.236	ø 6.0	**FSC-09-6.0-C**	1335 00106009
ø 0.240	ø 6.1	**FSC-09-6.1-C**	1335 00106109
ø 0.244	ø 6.2	**FSC-09-6.2-C**	1335 00106209
ø 0.255	ø 6.5	**FSC-09-6.5-C**	1335 00106509
ø 0.275	ø 7.0	**FSC-09-7.0-C**	1335 00107009
ø 0.314	ø 8.0	**FSC-09-8.0-C**	1335 00108009
ø 0.313	ø 8.0	**FSC-09-8.0-C**	1335 00108009
ø 0.318	ø 8.1	**FSC-09-8.1-C**	1335 00108109
ø 0.323	ø 8.3	**FSC-09-8.3-C**	1335 00108309
ø 0.334	ø 8.5	**FSC-09-8.5-C**	1335 00108509
ø 0.354	ø 9.0	**FSC-16-9.0-C**	1335 00109016
ø 0.367	ø 9.4	**FSC-16-9.4-C**	1335 00109416
ø 0.374	ø 9.5	**FSC-16-9.5-C**	1335 00109516
ø 0.381	ø 9.7	**FSC-16-9.7-C**	1335 00109716
ø 0.393	ø 10.0	**FSC-16-10.0-C**	1335 00110016
ø 0.413	ø 10.5	**FSC-16-10.5-C**	1335 00110516
ø 0.429	ø 10.9	**FSC-16-10.9-C**	1335 00110916
ø 0.433	ø 11.0	**FSC-16-11.0-C**	1335 00111016
ø 0.437	ø 11.1	**FSC-16-11.1-C**	1335 00111116
ø 0.472	ø 12.0	**FSC-16-12.0-C**	1335 00112016
ø 0.480	ø 12.2	**FSC-16-12.2-C**	1335 00112216
ø 0.492	ø 12.5	**FSC-16-12.5-C**	1335 00112516
ø 0.511	ø 13.0	**FSC-16-13.0-C**	1335 00113016
ø 0.542	ø 13.8	**FSC-16-13.8-C**	1335 00113816
ø 0.551	ø 14.0	**FSC-16-14.0-C**	1335 00114016
ø 0.562	ø 14.3	**FSC-16-14.3-C**	1335 00114316
ø 0.590	ø 15.0	**FSC-22-15.0-C**	1335 00115022
ø 0.629	ø 16.0	**FSC-22-16.0-C**	1335 00116022
ø 0.652	ø 16.6	**FSC-22-16.6-C**	1335 00116622
ø 0.669	ø 17.0	**FSC-22-17.0-C**	1335 00117022
ø 0.697	ø 17.8	**FSC-22-17.8-C**	1335 00117822
ø 0.700	ø 17.8	**FSC-22-17.8-C**	1335 00117822
ø 0.708	ø 18.0	**FSC-22-18.0-C**	1335 00118022
ø 0.748	ø 19.0	**FSC-22-19.0-C**	1335 00119022
ø 0.800	ø 20.4	**FSC-22-20.4-C**	1335 00120422
ø 0.787	ø 20.0	**FSC-22-20.0-C**	1335 00120022
ø 0.826	ø 21.0	**FSC-22-21.0-C**	1335 00121022
ø 0.866	ø 22.0	**FSC-22-22.0-C**	1335 00122022
ø 0.905	ø 23.0	**FSC-22-23.0-C**	1335 00123022

OH type shall be selected in case not utilizing coolant through from the machine spindle.

Ordering Example

FSC - 16 - 9.0 - OH

16 Series — Tool Shank Dia.

Ordering Example

FSC - 16 - 9.0 - C

16 Series — Tool Shank Dia.

Inch to Metric (mm) → Inch × 25.4
Metric (mm) to Inch → Metric ÷ 25.4 or Metric × 0.03937

Special / Custom Sizes on request

TP1

Quick Change Tapping Chuck

● Strong compression allows use with rolled thread tap.

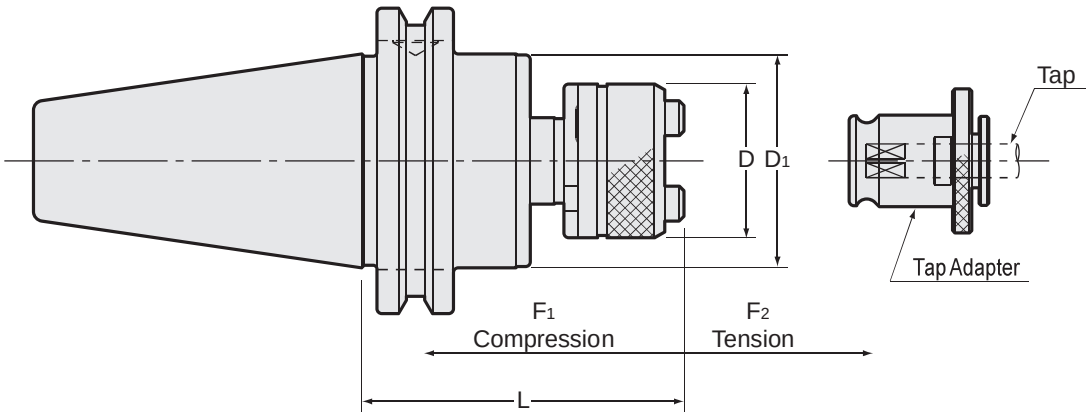

⚠ For capable tap sizes, please refer to P.463-P.464 chart.

Unit : Inch

Code	Model	Tap Size	Adapter Size	D	D1	L	Axial compensation		kg
							F1	F2	
2030 00401062	**CAT40 -TP1 -1 -62**	#0-12, 1/4-1/2 M3-M12	1	1.260	1.750	2.441	0.236	0.709	1.0
2030 00402093	**CAT40 -TP1 -2 -93**	5/16-7/8 M8-M22	2	1.969	1.795	3.661	0.591	0.787	1.4
2030 00403179	**CAT40 -TP1 -3 -179**	13/16-1-3/8 M16-M38	3	2.835	2.441	7.047	0.787	0.787	
2030 00501071	**CAT50 -TP1 -1 -71**	#0-12, 1/4-1/2 M3-M12	1	1.260	2.750	2.795	0.236	0.709	3.2
2030 00502102	**CAT50 -TP1 -2 -102**	5/16-7/8 M8-M22	2	1.969	2.750	4.015	0.591	0.787	3.7
2030 00503142	**CAT50 -TP1 -3 -142**	13/16-1-3/8 M16-M38	3	2.835	2.750	5.708	0.787	0.787	4.5
2030 00504165	**CAT50 -TP1 -4 -165**	7/8-1-3/4 M22-M48	4	3.740	3.268	6.496	0.886	0.886	6.3

1.To prevent tap breakage, use tap adapter with safety torque device.
2.Tap adapter is sold separately.

Tap adapter

P.458

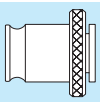

Ordering Example

CAT50 - TP1-2 - 93

Shank size | Adapter size | Projection length(L)

Inch to Metric (mm) → Inch × 25.4
Metric (mm) to Inch → Metric ÷ 25.4 or Metric × 0.03937

Special / Custom Sizes on request

STP

Synchro Tapping Chuck

- Quick-changeable tap adapter.
- For machines with rigid tapping cycles.
- Compatible with NT high precision FDC collets or Bilz (WE/WEN) quick change.
- Length adjustable adapters offer quick easy adjustments.
- Coolant-thru capable with the use of FDC-OH high precision coolant collets. (When STC1 is used)

STP

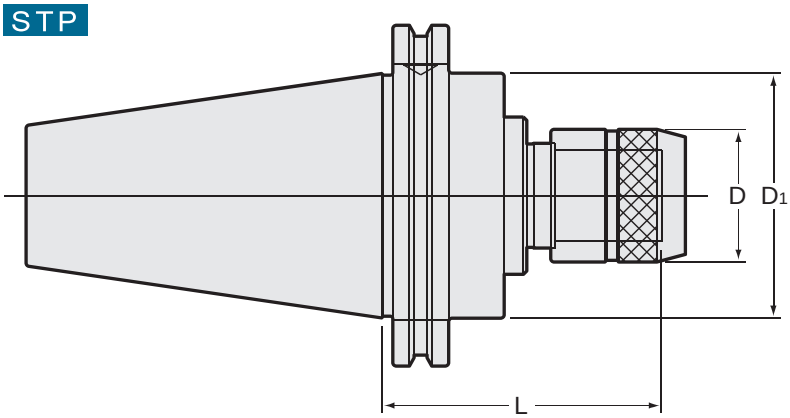

STC

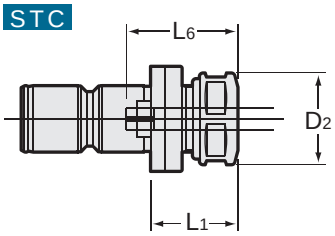

WEN or WE

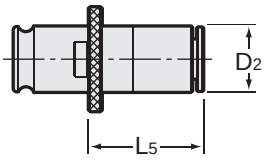

Unit : Inch

Code	Model	L	D	D1	kg	Adapter Size	L5	D2	Tapping Capacity	Coolant Pressure
1950 00401075	CAT40 -STP1 -75	2.953	1.496	1.750	1.2	STC1- ***	1.024	1.024	M3 - M12 PT1/8 #8-12, 1/4, 5/16, 7/16, 1/8SS	145psi (1MPa)
1950 00401095	-STP1 -95	3.740	1.496	1.750	1.4	WEN1B- ***	1.299	0.748		
						WE1- ***	0.276	0.748		
1950 00402095	CAT40 -STP2 -95	3.740	2.165	1.850	1.6	STC2- ***	1.378	1.417	M8 - M20 PT1/8,PT1/4,PT3/8 1/4-3/4, 1/8SS, 1/8LS, 1/4P	72.5psi (0.5MPa)
1950 00402115	-STP2 -115	4.528	2.165	1.750	1.9	WEN2B- ***	2.323	1.181		
						WE2- ***	0.433	1.181		
1950 00501110	CAT50 -STP1 -110	4.331	1.496	2.750	3.5	STC1- ***	1.024	1.024	M3 - M12 PT1/8 #8-12, 1/4, 5/16, 7/16, 1/8SS	145psi (1MPa)
						WEN1B- ***	1.299	0.748		
						WE1- ***	0.276	0.748		
1950 00502100	CAT50 -STP2 -100	3.937	2.165	2.750	3.6	STC2- ***	1.378	1.417	M8 - M20 PT1/8,PT1/4,PT3/8 1/4-3/4, 1/8SS, 1/8LS, 1/4P	72.5psi (0.5MPa)
1950 00502130	-STP2 -130	5.118	2.165	2.750	4.2	WEN2B- ***	2.323	1.181		
						WE2- ***	0.433	1.181		

Unit : Inch

L6			L6		
STC1	MIN	MAX	STC2	MIN	MAX
M3	0.945 (1.063)	1.142	M8	1.339 (1.496)	1.535
M4	1.024 (1.102)	1.220	M10	1.339 (1.496)	1.535
M5	1.220	1.378	M11	1.239 (1.496)	1.496
M6	1.220	1.378	M12	1.378 (1.535)	1.575
M8	1.260	1.457	M14	1.535	1.732
M10	1.260	1.457	M16	1.614	1.811
M11	1.260	1.457	M17	1.614	1.811
M12	1.299	1.457	M18	1.693	1.890
PT1/8	1.339	1.496	M20	1.693	1.890
			PT1/8	1.142	1.299
			PT1/4	1.142	1.220
			PT3/8	1.299	1.339

Model	Collet Type		Nut	Spanner
	Metric, Inch Thread	Pipe Tap		
STC1- ***	FDC-09	-	HDP-09B	S-1L
	-	ESC10	KDP-1916	
STC2- ***	FDC-16	-	HDP-16B	S-4L
	-	ESC16	KDP-2825	

STP Holder

Ordering Example

CAT40 - STP1 - 95
Shank size / Adapter size / L1

STC adapter

Ordering Example

STC1 - M10 - ANSI
Size / Tap size / ANSI,ISO,DIN,JIS

WEN•B BILZ Tap Adapter

Ordering Example

WEN1B - M10 - ANSI
Size / Tap size / ANSI,ISO,DIN,JIS

Tap adapter WE
P.458



Tap adapter WEN
P.460



Spanner
P.095



1. STC adapter includes a collet and nut. Spanner is sold separately.
2. When ordering STC Adapter, please specify the tap shank and drive square.
3. With FDC-OH or C collet (p.087-088) and STC Adapter, STP can be used for center-thru coolant.

Inch to Metric (mm) → Inch × 25.4
Metric (mm) to Inch → Metric ÷ 25.4 or Metric × 0.03937

Special / Custom Sizes on request

SLH

Side Lock Holder

● h6 I.D. tolerance

Type 1

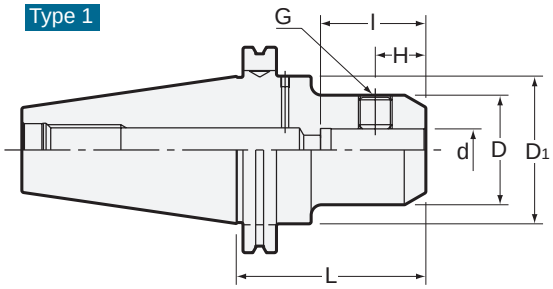

Type 2

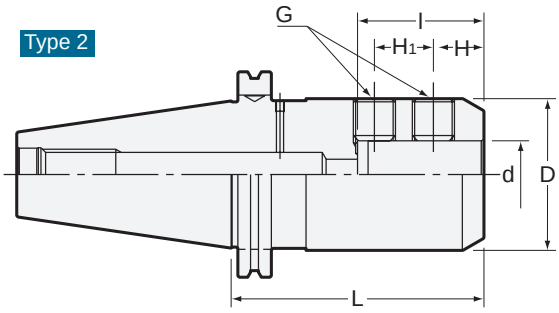

Inch Sizes

Unit : Inch

Code	Model	Type	dH6	D	L	l	H	H1	D1	G	kg
2040 30408065	CAT40 -SLH-0250 -65	1	0.250	0.790	2.559	3.000	0.437	—	1.750	1/4-28 × 1/4	1.1
2040 30408105	-105	1	0.250	0.790	4.134	3.000	0.437	—	1.750	1/4-28 × 1/4	1.1
2040 30410065	CAT40 -SLH-0313 -65	1	0.3125	0.870	2.559	3.000	0.437	—	1.750	5/16-24 × 1/4	1.1
2040 30410105	-105	1	0.3125	0.870	4.134	3.000	0.437	—	1.750	5/16-24 × 1/4	
2040 30412065	CAT40 -SLH-0375 -65	1	0.375	1.000	2.559	3.000	0.710	—	1.750	3/8-24 × 5/16	1.1
2040 30412105	-105	1	0.375	1.000	4.134	3.000	0.710	—	1.750	3/8-24 × 5/16	
2040 30414065	CAT40 -SLH-0438 -65	1	0.4375	1.380	2.559	3.000	0.710	—	1.750	7/16-20 × 3/8	1.2
2040 30414105	-105	1	0.4375	1.380	4.134	3.000	0.710	—	1.750	7/16-20 × 3/8	
2040 30416065	CAT40 -SLH-0500 -65	1	0.500	1.380	2.559	3.000	0.710	—	1.750	7/16-20 × 3/8	1.2
2040 30416105	-105	1	0.500	1.380	4.134	3.000	0.710	—	1.750	7/16-20 × 3/8	1.4
2040 30420065	CAT40 -SLH-0625 -65	1	0.625	1.650	2.559	3.150	0.700	—	1.750	9/16-18 × 1/2	1.2
2040 30420105	-105	1	0.625	1.650	4.134	3.150	0.700	—	1.750	9/16-18 × 1/2	1.6
2040 30424065	CAT40 -SLH-0750 -65	1	0.750	1.750	2.559	3.976	0.740	—	1.750	5/8-18 × 1/2	
2040 30424105	-105	1	0.750	1.750	4.134	3.976	0.740	—	1.750	5/8-18 × 1/2	
2040 30428090	CAT40 -SLH-0875 -90	1	0.875	2.000	3.543	4.331	0.740	—	—	5/8-18 × 1/2	1.5
2040 30428135	-135	1	0.875	2.000	5.315	4.331	0.740	—	—	5/8-18 × 1/2	
2040 30432090	CAT40 -SLH-1000 -90	1	1.000	2.360	3.543	3.543	0.860	—	—	3/4-16 × 11/16	1.8
2040 30432135	-135	1	1.000	2.360	5.315	4.843	0.860	—	—	3/4-16 × 11/16	
2040 30440135	CAT40 -SLH-1250 -135	1	1.250	2.650	5.315	3.543	0.860	—	—	3/4-16 × 11/16	
2040 30440165	-165	1	1.250	2.650	6.496	4.843	0.860	—	—	3/4-16 × 11/16	
2040 30448135	CAT40 -SLH-1500 -135	1	1.500	2.990	5.315	3.543	1.181	—	—	3/4-16 × 11/16	3.6
2040 30448165	-165	1	1.500	2.990	6.496	4.843	1.181	—	—	3/4-16 × 11/16	
2040 30508090	CAT50 -SLH-0250 -90	1	0.250	0.790	3.543	3.000	0.437	—	2.750	1/4-28 × 1/4	
2040 30508135	-135	1	0.250	0.790	5.315	3.000	0.437	—	2.750	1/4-28 × 1/4	3.1
2040 30510090	CAT50 -SLH-0313 -90	1	0.3125	0.870	3.543	3.000	0.437	—	2.750	5/16-24 × 1/4	
2040 30510135	-135	1	0.3125	0.870	5.315	3.000	0.437	—	2.750	5/16-24 × 1/4	
2040 30512090	CAT50 -SLH-0375 -90	1	0.375	1.000	3.543	3.000	0.710	—	2.750	3/8-24 × 5/16	3.1
2040 30512135	-135	1	0.375	1.000	5.315	3.000	0.710	—	2.750	3/8-24 × 5/16	3.3
2040 30514090	CAT50 -SLH-0438 -90	1	0.4375	1.380	3.543	3.000	0.710	—	2.750	7/16-20 × 3/8	
2040 30514135	-135	1	0.4375	1.380	5.315	3.000	0.710	—	2.750	7/16-20 × 3/8	
2040 30516090	CAT50 -SLH-0500 -90	1	0.500	1.380	3.543	3.000	0.710	—	2.750	7/16-20 × 3/8	3.3
2040 30516135	-135	1	0.500	1.380	5.315	3.000	0.710	—	2.750	7/16-20 × 3/8	3.6
2040 30520090	CAT50 -SLH-0625 -90	1	0.625	1.650	3.543	3.150	0.700	—	2.750	9/16-18 × 1/2	3.5
2040 30520135	-135	1	0.625	1.650	5.315	3.150	0.700	—	2.750	9/16-18 × 1/2	
2040 30524090	CAT50 -SLH-0750 -90	1	0.750	1.750	3.543	3.976	0.740	—	2.750	5/8-18 × 1/2	3.5
2040 30524135	-135	1	0.750	1.750	5.315	3.976	0.740	—	2.750	5/8-18 × 1/2	4.0
2040 30528090	CAT50 -SLH-0875 -90	1	0.875	2.000	3.543	4.331	0.740	—	2.750	5/8-18 × 1/2	
2040 30528135	-135	1	0.875	2.000	5.315	4.331	0.740	—	2.750	5/8-18 × 1/2	
2040 30532105	CAT50 -SLH-1000 -105	1	1.000	2.360	4.134	4.843	0.860	—	2.750	3/4-16 × 11/16	4.1
2040 30532150	-150	1	1.000	2.360	5.906	4.843	0.860	—	2.750	3/4-16 × 11/16	5.0
2040 30540105	CAT50 -SLH-1250 -105	1	1.250	2.650	4.134	4.843	0.860	—	2.750	3/4-16 × 11/16	4.2
2040 30540150	-150	1	1.250	2.650	5.906	4.843	0.860	—	2.750	3/4-16 × 11/16	5.4
2040 30548105	CAT50 -SLH-1500 -105	1	1.500	2.990	4.134	4.843	1.181	—	—	3/4-16 × 11/16	4.4
2040 30548150	-150	1	1.500	2.990	5.906	4.843	1.181	—	—	3/4-16 × 11/16	
2040 30564135	CAT50 -SLH-2000 -135	2	2.000	3.740	5.315	4.843	1.260	1.500	—	1-12 × 7/8	6.3
2040 30564165	-165	2	2.000	3.740	6.496	4.843	1.260	1.500	—	1-12 × 7/8	

Ordering Example

CAT40 - SLH - 0250 - 65

Shank size | I.D. (d) | Projection length (L)

Inch to Metric (mm) → Inch × 25.4
Metric (mm) to Inch → Metric ÷ 25.4 or Metric × 0.03937

Special / Custom Sizes on request

SL2

Side Lock Holder

● For JIS straight shank endmill with flat.



Type 1

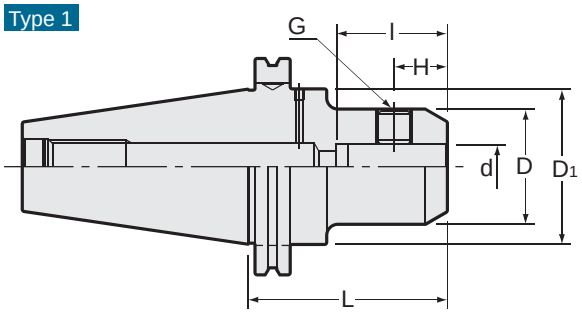

Type 2

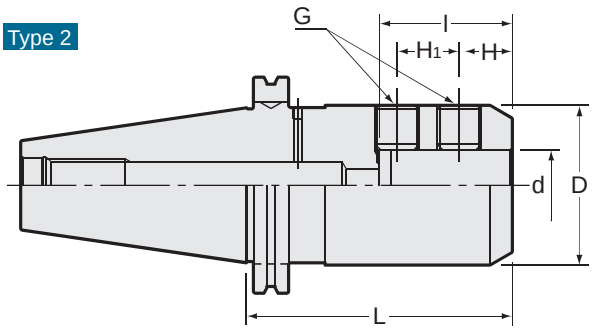

Metric Sizes

Unit : Inch

Code	Model	Type	dH6 (mm)	D	D1	L	H	H1	l	G (mm)	kg
2040 20406075	CAT40 SL2 -6 -75	1	6	0.984	1.750	2.953	0.709	—	1.417	M 6	1.1
2040 20408075	CAT40 SL2 -8 -75	1	8	1.102	1.750	2.953	0.709	—	1.417	M 8	1.2
2040 20410075	CAT40 SL2 -10 -75	1	10	1.378	1.750	2.953	0.787	—	1.575	M10	1.3
2040 20412075	CAT40 SL2 -12 -75	1	12	1.654	1.750	2.953	0.886	—	1.772	M12	1.4
2040 20416075	CAT40 SL2 -16 -75	1	16	1.890	1.750	2.953	0.945	—	1.890	M14	1.5
2040 20420075	CAT40 SL2 -20 -75	1	20	2.047	1.750	2.953	0.984	—	1.969	M16	1.5
2040 20425090	CAT40 SL2 -25 -90	2	25	2.559	—	3.543	0.945	0.984	2.205	M18	2.1
2040 20432120	CAT40 SL2 -32 -120	2	32	2.835	—	4.724	0.945	1.102	2.362	M20	3.2
2040 20506090	CAT50 SL2 -6 -90	1	6	0.984	2.750	3.543	0.709	—	1.417	M 6	
2040 20508090	CAT50 SL2 -8 -90	1	8	1.102	2.750	3.543	0.709	—	1.417	M 8	
2040 20510090	CAT50 SL2 -10 -90	1	10	1.378	2.750	3.543	0.787	—	1.575	M10	
2040 20512090	CAT50 SL2 -12 -90	1	12	1.654	2.750	3.543	0.886	—	1.772	M12	
2040 20516090	CAT50 SL2 -16 -90	1	16	1.890	2.750	3.543	0.945	—	1.890	M14	
2040 20520090	CAT50 SL2 -20 -90	1	20	2.047	2.750	3.543	0.984	—	1.969	M16	3.7
2040 20525105	CAT50 SL2 -25 -105	2	25	2.559	—	4.134	0.945	0.984	2.205	M18	4.4
2040 20532120	CAT50 SL2 -32 -120	2	32	2.835	—	4.724	0.945	1.102	2.362	M20	5.1
2040 20540120	CAT50 SL2 -40 -120	2	40	3.150	—	4.724	1.181	1.260	2.756	M20	5.4
2040 20542120	CAT50 SL2 -42 -120	2	42	3.228	—	4.724	1.181	1.260	2.756	M20	5.5

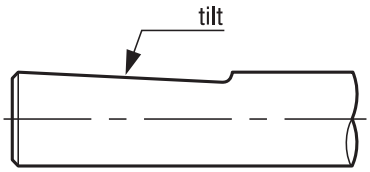

Please contact NT if the cutting tool has tilted flat on the shank.
Special tool holder that matches to the tilted flat can be manufactured.

Ordering Example

CAT40 - SL2 - 6 - 75

- CAT40: Shank size
- 6: I.D. (d)
- 75: Projection length (L)

Inch to Metric (mm) → Inch × 25.4
Metric (mm) to Inch → Metric ÷ 25.4 or Metric × 0.03937

Special / Custom Sizes on request

FMA

Face Mill Arbor

● For JIS B4113 face mill.

Type 1

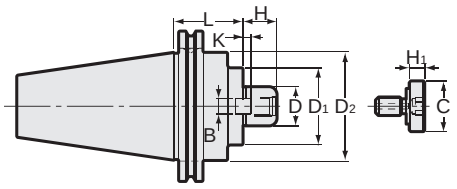

Type 3

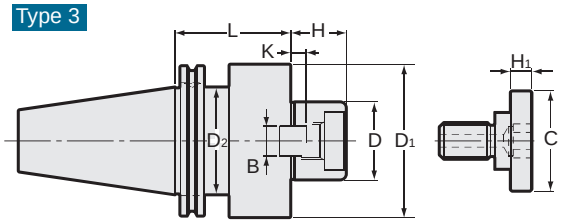

Type 2

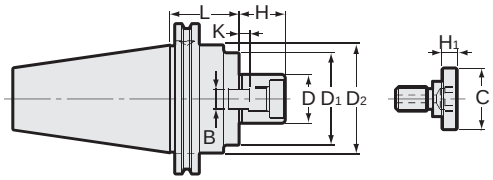

Type 4

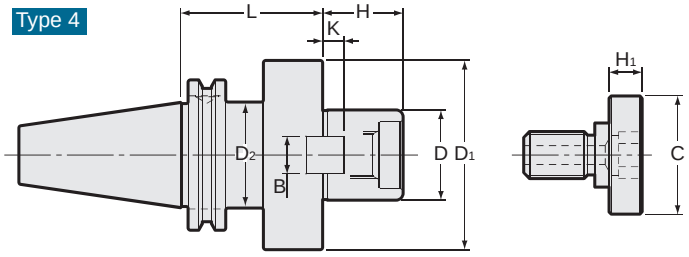

Unit : Inch

Code	Model	Type	Dh6	L	D1	D2	H	B	K	C	H1	kg	Bolt
2050 00419045	**CAT40 -FMA19.05 -45**	1	0.750	1.772	1.772	1.750	0.630	0.315	0.138	0.874	0.354	1.3	MBA-M10
2050 00419060	**-60**	1	0.750	2.362	1.772	1.750	0.630	0.315	0.138	0.874	0.354	1.5	MBA-M10
2050 00419090	**-90**	1	0.750	3.543	1.772	1.750	0.630	0.315	0.138	0.874	0.354	1.8	MBA-M10
2050 00425045	**CAT40 -FMA25.4 -45**	3	1.000	1.772	1.969	1.750	0.866	0.374	0.197	1.299	0.394	1.4	MBA-M12
2050 00425090	**-90**	3	1.000	3.543	1.969	1.750	0.866	0.374	0.197	1.299	0.394	2.1	MBA-M12
2050 00431060	**CAT40 -FMA31.75 -60**	3	1.250	2.362	2.362	1.750	1.181	0.500	0.276	1.575	0.394	1.8	MBA-M16
2050 00431075	**-75**	3	1.250	2.953	2.362	1.750	1.181	0.500	0.276	1.575	0.394	2.1	MBA-M16
2050 00438060	**CAT40 -FMA38.1 -60**	4	1.500	2.362	3.150	1.750	1.339	0.626	0.354	1.969	0.551	2.5	MBA-M20
2050 00438090	**-90**	4	1.500	3.543	3.150	1.750	1.339	0.626	0.354	1.969	0.551	3.4	MBA-M20
2050 00525045	**CAT50 -FMA25.4 -45**	1	1.000	1.772	1.969	2.750	0.866	0.374	0.197	1.299	0.394	3.5	MBA-M12
2050 00525090	**-90**	1	1.000	3.543	1.969	2.750	0.866	0.374	0.197	1.299	0.394	4.2	MBA-M12
2050 00525150	**-150**	1	1.000	5.906	1.969	2.750	0.866	0.374	0.197	1.299	0.394	5.1	MBA-M12
2050 00531045	**CAT50 -FMA31.75 -45**	2	1.250	1.772	2.362	2.750	1.181	0.500	0.276	1.575	0.394	3.6	MBA-M16
2050 00531075	**-75**	2	1.250	2.953	2.362	2.750	1.181	0.500	0.276	1.575	0.394		MBA-M16
2050 00531105	**-105**	2	1.250	4.134	2.362	2.750	1.181	0.500	0.276	1.575	0.394		MBA-M16
2050 00538045	**CAT50 -FMA38.1 -45**	2	1.500	1.772	3.150	2.750	1.339	0.626	0.354	1.969	0.551	4.0	MBA-M20
2050 00538075	**-75**	2	1.500	2.953	3.150	2.750	1.339	0.626	0.354	1.969	0.551	5.2	MBA-M20
2050 00550075	**-75**	3	2.000	2.953	3.937	2.750	1.417	0.750	0.394	2.559	0.551	6.2	MBA-M24

Clamp bolt is included.

Ordering Example

CAT40 - FMA 19.05 - 45

Shank size | D1 | Projection length (L)

Inch to Metric (mm) → Inch × 25.4
Metric (mm) to Inch → Metric ÷ 25.4 or Metric × 0.03937

Special / Custom Sizes on request

SCA

Side Cutter Arbor

● For JIS side cutter and metal saw.

Type 1

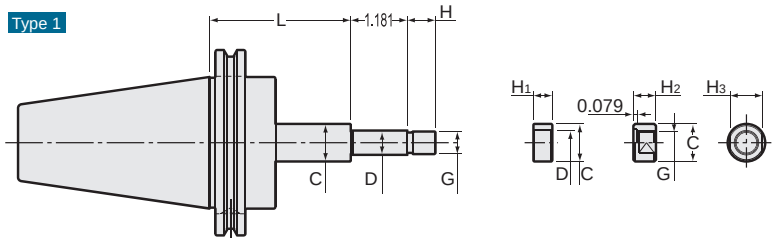

Type 2

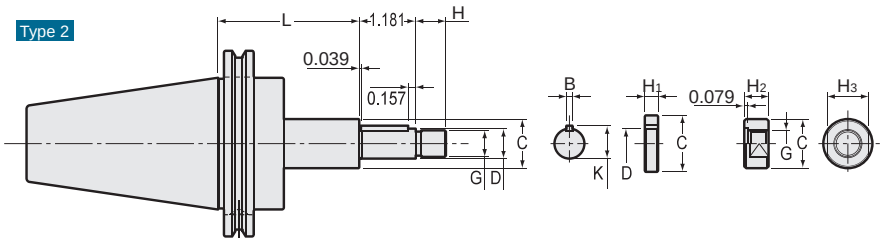

Inch Sizes

Unit : Inch

Code	Model	Type	D (B10 / h 6)	L	C	G (mm)	H	B	K	H1	H2	H3
1900 01412060	CAT40 -SCA12.7 -60	1	0.500	2.362	0.787	M12 × 1.25	0.591	—	—	0.118, 0.197, 0.276, 0.315, 0.394, 0.472	0.472	0.669 (17mm)
1900 01412090	-90	1	0.500	3.543	0.787	M12 × 1.25	0.591	—	—	0.118, 0.197, 0.276, 0.315, 0.394, 0.472	0.472	0.669 (17mm)
1900 01415075	CAT40 -SCA15.875 -75	2	0.625	2.953	1.024	M14 × 1.5	0.630	0.125	0.686	0.118, 0.197, 0.276, 0.315, 0.394, 0.472	0.512	0.866 (22mm)
1900 01415105	-105	2	0.625	4.134	1.024	M14 × 1.5	0.630	0.125	0.686	0.118, 0.197, 0.276, 0.315, 0.394, 0.472	0.512	0.866 (22mm)
1900 01422075	CAT40 -SCA22.225 -75	2	0.875	2.953	1.339	M20 × 1.5	0.827	0.125	0.938	0.118, 0.197, 0.276, 0.315, 0.394, 0.472	0.709	1.181 (30mm)
1900 01422105	-120	2	0.875	4.724	1.339	M20 × 1.5	0.827	0.125	0.938	0.118, 0.197, 0.276, 0.315, 0.394, 0.472	0.709	1.181 (30mm)
1900 01425075	CAT40 -SCA25.4 -75	2	1.000	2.953	1.575	M24 × 2	0.984	0.250	1.094	0.118, 0.197, 0.276, 0.315, 0.394, 0.472	0.827	1.260 (32mm)
1900 01425120	-120	2	1.000	4.724	1.575	M24 × 2	0.984	0.250	1.094	0.118, 0.197, 0.276, 0.315, 0.394, 0.472	0.827	1.260 (32mm)
1900 01431090	CAT40 -SCA31.75 -90	2	1.250	3.543	1.811	M30 × 2	1.181	0.312	1.375	0.118, 0.197, 0.276, 0.315, 0.394, 0.472	1.024	1.614 (41mm)
1900 01512075	CAT50 -SCA12.7 -75	1	0.500	2.953	0.787	M12 × 1.25	0.591	—	—	0.118, 0.197, 0.276, 0.315, 0.394, 0.472	0.472	0.669 (17mm)
1900 01512105	-105	1	0.500	4.134	0.787	M12 × 1.25	0.591	—	—	0.118, 0.197, 0.276, 0.315, 0.394, 0.472	0.472	0.669 (17mm)
1900 01515090	CAT50 -SCA15.875 -90	2	0.625	3.543	1.024	M14 × 1.5	0.630	0.125	0.686	0.118, 0.197, 0.276, 0.315, 0.394, 0.472	0.512	0.866 (22mm)
1900 01515120	-120	2	0.625	4.724	1.024	M14 × 1.5	0.630	0.125	0.686	0.118, 0.197, 0.276, 0.315, 0.394, 0.472	0.512	0.866 (22mm)
1900 01522090	CAT50 -SCA22.225 -90	2	0.875	3.543	1.339	M20 × 1.5	0.827	0.125	0.938	0.118, 0.197, 0.276, 0.315, 0.394, 0.472	0.709	1.181 (30mm)
1900 01522135	-135	2	0.875	5.315	1.339	M20 × 1.5	0.827	0.125	0.938	0.118, 0.197, 0.276, 0.315, 0.394, 0.472	0.709	1.181 (30mm)
1900 01525090	CAT50 -SCA25.4 -90	2	1.000	3.543	1.575	M24 × 2	0.984	0.250	1.094	0.118, 0.197, 0.276, 0.315, 0.394, 0.472	0.827	1.260 (32mm)
1900 01525135	-135	2	1.000	5.315	1.575	M24 × 2	0.984	0.250	1.094	0.118, 0.197, 0.276, 0.315, 0.394, 0.472	0.827	1.260 (32mm)
1900 01531090	CAT50 -SCA31.75 -90	2	1.250	3.543	1.811	M30 × 2	1.181	0.312	1.375	0.118, 0.197, 0.276, 0.315, 0.394, 0.472	1.024	1.614 (41mm)
1900 01531135	-135	2	1.250	5.314	1.811	M30 × 2	1.181	0.312	1.375	0.118, 0.197, 0.276, 0.315, 0.394, 0.472	1.024	1.614 (41mm)
1900 01538090	CAT50 -SCA38.1 -90	2	1.500	3.543	2.165	M36 × 3	1.417	0.375	1.656	0.118, 0.197, 0.276, 0.315, 0.394, 0.472	1.220	1.811 (46mm)
1900 01538135	-135	2	1.500	5.315	2.165	M36 × 3	1.417	0.375	1.656	0.118, 0.197, 0.276, 0.315, 0.394, 0.472	1.220	1.811 (46mm)

One clamp nut and spacers (size 0.118, 0.197, 0.276, 0.315, 0.394, 0.472 / one each) are included.

Ordering Example

CAT40 - SCA 12.7 - 60

Shank size | D1 | Projection length (L)

Inch to Metric (mm) → Inch × 25.4
Metric (mm) to Inch → Metric ÷ 25.4 or Metric × 0.03937

Special / Custom Sizes on request

Metric Sizes

Unit : Inch

Code	Model	Type	D (B10 / h 6)	L	C	G (mm)	H	B	K	H1	H2	H3
01900000413060	CAT40 -SCA13 -60	1	13	2.362	0.787	M12 × 1.25	0.591	—	—	0.118, 0.197, 0.276, 0.315, 0.394, 0.472	0.472	0.669 (17mm)
01900000413090	-90	1	13	3.543	0.787	M12 × 1.25	0.591	—	—	0.118, 0.197, 0.276, 0.315, 0.394, 0.472	0.472	0.669 (17mm)
01900000416075	CAT40 -SCA16 -75	2	16	2.953	1.024	M14 × 1.5	0.630	0.157	0.677	0.118, 0.197, 0.276, 0.315, 0.394, 0.472	0.512	0.866 (22mm)
01900000416105	-105	2	16	4.134	1.024	M14 × 1.5	0.630	0.157	0.677	0.118, 0.197, 0.276, 0.315, 0.394, 0.472	0.512	0.866 (22mm)
01900000422075	CAT40 -SCA22 -75	2	22	2.953	1.339	M20 × 1.5	0.827	0.236	0.929	0.118, 0.197, 0.276, 0.315, 0.394, 0.472	0.709	1.181 (30mm)
01900000422120	-120	2	22	4.724	1.339	M20 × 1.5	0.827	0.236	0.929	0.118, 0.197, 0.276, 0.315, 0.394, 0.472	0.709	1.181 (30mm)
01900000427075	CAT40 -SCA27 -75	2	27	2.953	1.575	M24 × 2	0.984	0.276	1.142	0.118, 0.197, 0.276, 0.315, 0.394, 0.472	0.827	1.260 (32mm)
01900000427120	-120	2	27	4.724	1.575	M24 × 2	0.984	0.276	1.142	0.118, 0.197, 0.276, 0.315, 0.394, 0.472	0.827	1.260 (32mm)
01900000432090	CAT40 -SCA32 -90	2	32	3.543	1.811	M30 × 2	1.181	0.315	1.339	0.118, 0.197, 0.276, 0.315, 0.394, 0.472	1.024	1.614 (41mm)
01900000513075	CAT50 -SCA13 -75	1	13	2.953	0.787	M12 × 1.25	0.591	—	—	0.118, 0.197, 0.276, 0.315, 0.394, 0.472	0.472	0.669 (17mm)
01900000513105	-105	1	13	4.134	0.787	M12 × 1.25	0.591	—	—	0.118, 0.197, 0.276, 0.315, 0.394, 0.472	0.472	0.669 (17mm)
01900000516090	CAT50 -SCA16 -90	2	16	3.543	1.024	M14 × 1.5	0.630	0.157	0.677	0.118, 0.197, 0.276, 0.315, 0.394, 0.472	0.512	0.866 (22mm)
01900000516120	-120	2	16	4.724	1.024	M14 × 1.5	0.630	0.157	0.677	0.118, 0.197, 0.276, 0.315, 0.394, 0.472	0.512	0.866 (22mm)
01900000522090	CAT50 -SCA22 -90	2	22	3.543	1.339	M20 × 1.5	0.827	0.236	0.929	0.118, 0.197, 0.276, 0.315, 0.394, 0.472	0.709	1.181 (30mm)
01900000522135	-135	2	22	5.315	1.339	M20 × 1.5	0.827	0.236	0.929	0.118, 0.197, 0.276, 0.315, 0.394, 0.472	0.709	1.181 (30mm)
01900000527090	CAT50 -SCA27 -90	2	27	3.543	1.575	M24 × 2	0.984	0.276	1.142	0.118, 0.197, 0.276, 0.315, 0.394, 0.472	0.827	1.260 (32mm)
01900000527135	-135	2	27	5.315	1.575	M24 × 2	0.984	0.276	1.142	0.118, 0.197, 0.276, 0.315, 0.394, 0.472	0.827	1.260 (32mm)
01900000532090	CAT50 -SCA32 -90	2	32	3.543	1.811	M30 × 2	1.181	0.315	1.339	0.118, 0.197, 0.276, 0.315, 0.394, 0.472	1.024	1.614 (41mm)
01900000532135	-135	2	32	5.314	1.811	M30 × 2	1.181	0.315	1.339	0.118, 0.197, 0.276, 0.315, 0.394, 0.472	1.024	1.614 (41mm)
01900000540090	CAT50 -SCA40 -90	2	40	3.543	2.165	M36 × 3	1.417	0.394	1.673	0.118, 0.197, 0.276, 0.315, 0.394, 0.472	1.220	1.811 (46mm)
01900000540135	-135	2	40	5.315	2.165	M36 × 3	1.417	0.394	1.673	0.118, 0.197, 0.276, 0.315, 0.394, 0.472	1.220	1.811 (46mm)

One clamp nut and spacers (size 0.118, 0.197, 0.276, 0.315, 0.394, 0.472 / one each) are included.

Ordering Example

CAT40 - SCA 13 - 60

CAT40: Shank size; 13: D1; 60: Projection length (L)

Inch to Metric (mm) → Inch × 25.4
Metric (mm) to Inch → Metric ÷ 25.4 or Metric × 0.03937

Special / Custom Sizes on request

JTA

Jacobs Taper Arbor

● Arbor for Jacobs taper keyless chuck.

Type 1

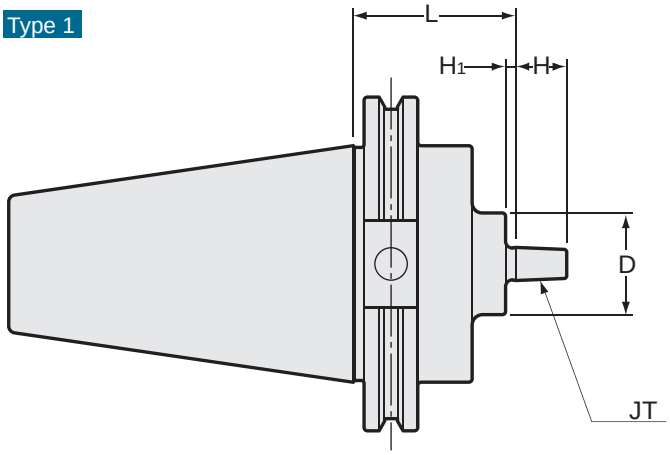

Type 2

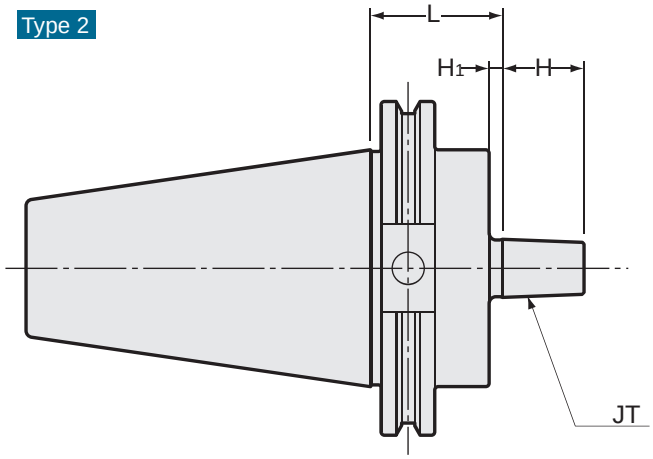

Unit : Inch

Code	Model	Type	JT	L	D	H	H1
1920 00402045	**CAT40 -JTA 2 -45**	1	2	1.772	1.181	0.787	0.157
1920 00433045	**CAT40 -JTA33 -45**	1	33	1.772	1.181	0.945	0.157
1920 00406045	**CAT40 -JTA 6 -45**	1	6	1.772	1.181	0.945	0.157
1920 00403045	**CAT40 -JTA 3 -45**	1	3	1.772	1.378	1.102	0.197
1920 00502045	**CAT50 -JTA 2 -45**	1	2	1.772	1.181	0.787	0.157
1920 00533045	**CAT50 -JTA33 -45**	1	33	1.772	1.181	0.945	0.157
1920 00506045	**CAT50 -JTA 6 -45**	1	6	1.772	1.181	0.945	0.157
1920 00503045	**CAT50 -JTA 3 -45**	2	3	1.772	—	1.102	0.276

Ordering Example

CAT40 - **JTA2** - **45**

Shank size | JT | Projection length (L)

Inch to Metric (mm) → Inch × 25.4
Metric (mm) to Inch → Metric ÷ 25.4 or Metric × 0.03937

Special / Custom Sizes on request

MTA

Morse Taper Holder

● For Morse taper shank with tang.

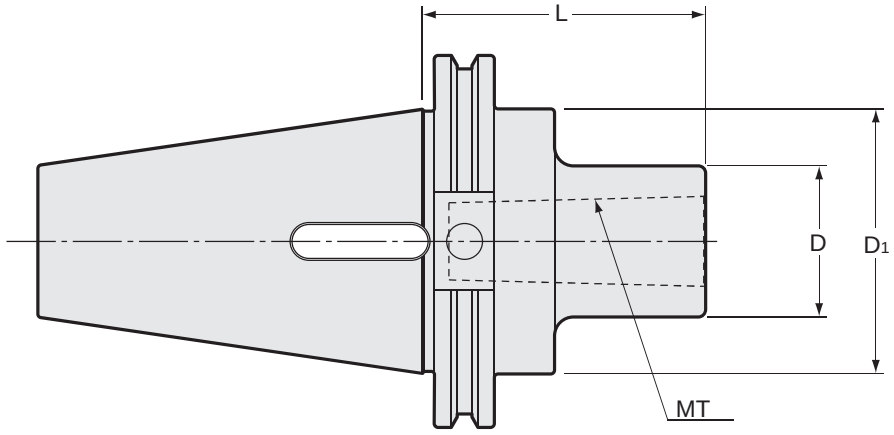

Unit : Inch

Code	Model			MT	L	D	D1	kg
1930 00401045	**CAT40**	**MTA1**	**-45**	1	1.770	1.000	1.750	
1930 00402060	**CAT40**	**MTA2**	**-60**	2	2.360	1.260	1.750	
1930 00403075	**CAT40**	**MTA3**	**-75**	3	3.000	1.570	1.750	
1930 00404090	**CAT40**	**MTA4**	**-90**	4	3.540	1.970	1.750	
1930 00502060	**CAT50**	**MTA2**	**-60**	2	2.360	1.260	2.750	3.1
1930 00503075	**CAT50**	**MTA3**	**-75**	3	3.000	1.570	2.750	3.2
1930 00504090	**CAT50**	**MTA4**	**-90**	4	3.540	1.970	2.750	3.3
1930 00505105	**CAT50**	**MTA5**	**-105**	5	4.130	2.760	2.750	

Ordering Example

CAT40 - **MTA1** - **45**

Shank size | MT | Projection length (L)

Inch to Metric (mm) → Inch × 25.4
Metric (mm) to Inch → Metric ÷ 25.4 or Metric × 0.03937

Special / Custom Sizes on request

KLD

Keyless Drill Chuck

- Integral shank design allows the use of a spanner wrench providing up to 4 times more gripping force than conventional Jacobs taper drill chucks.
- Integral shank design eliminates separation of the chuck from the arbor.
- Increased gripping force minimizes drill breakage after material penetration.
- Integral shank design provides improved accuracy.

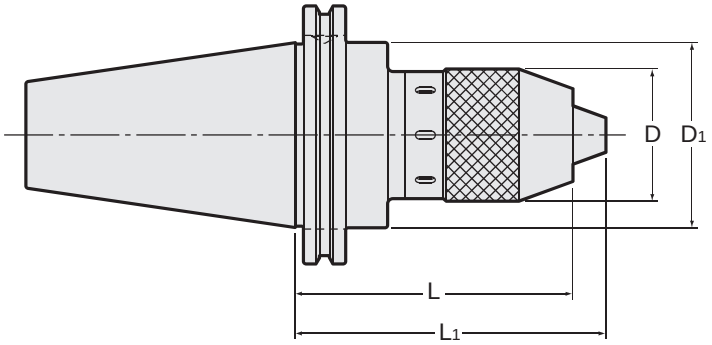

Unit : Inch

Code	Model	Chucking Dia.	D	D1	L	L1	kg	Spanner
2060 00413105	**CAT40 -KLD13 -105**	0.020 - 0.512	1.969	1.750	4.134	4.606	1.8	FC13LC
2060 00465105	**-KLD6.5 -105**	0.020 - 0.256	1.339	1.750	4.134	4.606	1.4	FC6.5LC
2060 00565105	**CAT50 -KLD6.5 -105**	0.020 - 0.256	1.339	2.750	4.134	4.606		FC6.5LC
2060 00513105	**-KLD13 -105**	0.020 - 0.512	1.969	2.750	4.134	4.606	3.9	FC13LC
2060 00513165	**-KLD13 -135**	0.020 - 0.512	1.969	2.750	5.315	5.787		FC13LC

Spanner (option)

Model	Code
FC6.5LC	2685 00000065
FC13LC	2685 00000130

Ordering Example

CAT40 - **KLD13** - **105**

CAT40: Shank size
KLD13: Max. chucking dia.
105: Projection length (L)

Inch to Metric (mm) → Inch × 25.4
Metric (mm) to Inch → Metric ÷ 25.4 or Metric × 0.03937

Special / Custom Sizes on request

HP-H

High-speed type
30,000min^{-1}

Hyper Spindle (Speed Increaser)

● Enables high speed cutting operation by multiplying the machine spindle speed at the cutting edge. (Max30000min^{-1})

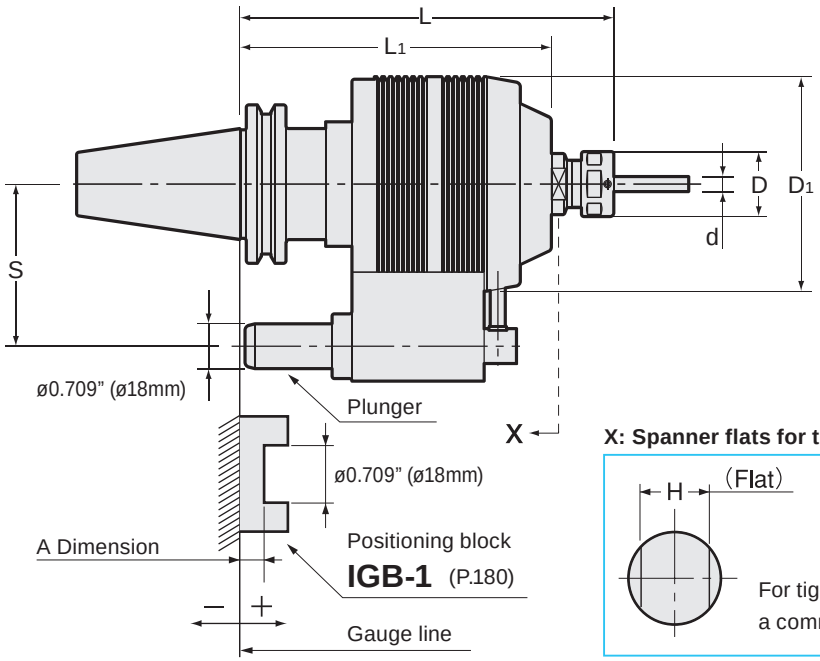

X: Spanner flats for the head shank fixation

For tighten up the nut, please use a commercial spanner.

Unit : Inch

Code	Model	d	L	L1	D	D1	S	H	Gear ratio	MAX rpm	kg	Nut
2070 1 ※ 407150	**CAT40 -HP07H -150 -※**	0.020 - 0.276	5.906	4.921	0.906	3.386	2.559 (65mm)	0.630 (16mm)	5:1	30,000	3.3	HDP-07A
2070 1 ※ 407180	**-180 -※**	0.020 - 0.276	7.087	4.921	0.906	3.386	2.559 (65mm)	0.630 (16mm)	5:1	30,000		HDP-07A
2070 1 ※ 409150	**CAT40 -HP09H -150 -※**	0.098 - 0.354	5.906	4.921	1.024	3.386	2.559 (65mm)	0.827 (21mm)	5:1	30,000		HDP-09
2070 1 ※ 409180	**-180 -※**	0.098 - 0.354	7.087	4.921	1.024	3.386	2.559 (65mm)	0.827 (21mm)	5:1	30,000		HDP-09
2070 1 ※ 412165	**CAT40 -HP12H -165 -※**	0.098 - 0.472	6.496	4.921	1.260	3.386	2.559 (65mm)	0.827 (21mm)	5:1	30,000		HDP-12
2070 1 ※ 412180	**-180 -※**	0.098 - 0.472	7.087	4.921	1.260	3.386	2.559 (65mm)	0.827 (21mm)	5:1	30,000		HDP-12
2070 1 ※ 507150	**CAT50 -HP07H -150 -※**	0.020 - 0.276	5.906	4.921	0.906	3.386	3.150 (80mm)	0.630 (16mm)	5:1	30,000		HDP-07A
2070 1 ※ 507180	**-180 -※**	0.020 - 0.276	7.087	4.921	0.906	3.386	3.150 (80mm)	0.630 (16mm)	5:1	30,000		HDP-07A
2070 1 ※ 509150	**CAT50 -HP09H -150 -※**	0.098 - 0.354	5.906	4.921	1.024	3.386	3.150 (80mm)	0.827 (21mm)	5:1	30,000		HDP-09
2070 1 ※ 509180	**-180 -※**	0.098 - 0.354	7.087	4.921	1.024	3.386	3.150 (80mm)	0.827 (21mm)	5:1	30,000		HDP-09
2070 1 ※ 512165	**CAT50 -HP12H -165 -※**	0.098 - 0.472	6.496	4.921	1.260	3.386	3.150 (80mm)	0.827 (21mm)	5:1	30,000		HDP-12
2070 1 ※ 512180	**-180 -※**	0.098 - 0.472	7.087	4.921	1.260	3.386	3.150 (80mm)	0.827 (21mm)	5:1	30,000		HDP-12

Collet
P. 086 - 089



Spanner
P.095



	Plunger No.				
	No.1	No.2	No.3	No.4	No.5
All Type	A +0.594 ~ +0.945	A +0.240 ~ +0.591	A -0.114 ~ +0.236	A -0.469 ~ -0.118	A -0.823 ~ -0.472

1. When ordering, please specify the plunger number (No.1~No.5).
2. Plunger is adjustable. Please refer to a chart on the right.
3. Collet and spanner are sold separately.
4. Use AA class collet only.

Ordering Example

CAT40 - HP 07 H - 150 - 1

CAT40: Shank size; 07: Max. collet I.D.; 150: Projection length (L); 1: Plunger No.

Inch to Metric (mm) → Inch × 25.4
Metric (mm) to Inch → Metric ÷ 25.4 or Metric × 0.03937

Special / Custom Sizes on request

AHE

90°

Angle Heads (ER Collet Type)

90° Fixed Type

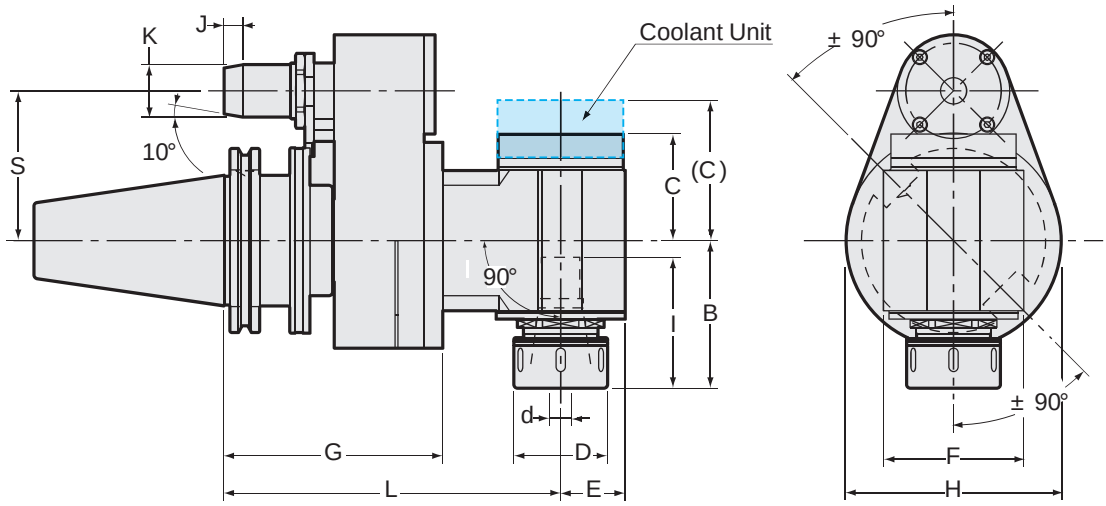

※Requires a positioning block. Please refer to P.179-180.

Unit : Inch

Code	Model	d	L	G	E	D	F	H	C (C)	B	I	J	K	S
2090 241166 ※※	**CAT40 -AHE1190 -165 -65-** ※※	0.020 -0.276	6.496	4.646	0.669	0.906	2.008	3.543	1.299 (1.830)	1.693	1.575	0.315	0.772 (19.6mm)	2.559 (65mm)
2090 241196 ※※	**-195 -65-** ※※	0.020 -0.276	7.677	4.646	0.669	0.906	2.008	3.543	1.299 (1.830)	1.693	1.575	0.315	0.772 (19.6mm)	2.559 (65mm)
2090 241126 ※※	**-225 -65-** ※※	0.020 -0.276	8.858	4.646	0.669	0.906	2.008	3.543	1.299 (1.830)	1.693	1.575	0.315	0.772 (19.6mm)	2.559 (65mm)
2090 241156 ※※	**-255 -65-** ※※	0.020 -0.276	10.039	5.315	0.669	0.906	2.008	3.543	1.299 (1.830)	1.693	1.575	0.315	0.772 (19.6mm)	2.559 (65mm)
2090 241186 ※※	**-285 -65-** ※※	0.020 -0.276	11.220	5.315	0.669	0.906	2.008	3.543	1.299 (1.830)	1.693	1.575	0.315	0.772 (19.6mm)	2.559 (65mm)
2090 241666 ※※	**CAT40 -AHE1690 -165 -65-** ※※	0.020 -0.394	6.496	4.646	0.866	1.260	2.283	3.543	1.752 (2.303)	2.441	2.559	0.315	0.772 (19.6mm)	2.559 (65mm)
2090 241696 ※※	**-195 -65-** ※※	0.020 -0.394	7.677	4.646	0.866	1.260	2.283	3.543	1.752 (2.303)	2.441	2.559	0.315	0.772 (19.6mm)	2.559 (65mm)
2090 241626 ※※	**-225 -65-** ※※	0.020 -0.394	8.858	4.646	0.866	1.260	2.283	3.543	1.752 (2.303)	2.441	2.559	0.315	0.772 (19.6mm)	2.559 (65mm)
2090 241656 ※※	**-255 -65-** ※※	0.020 -0.394	10.039	5.315	0.866	1.260	2.283	3.543	1.752 (2.303)	2.441	2.559	0.315	0.772 (19.6mm)	2.559 (65mm)
2090 242066 ※※	**CAT40 -AHE2090 -165 -65-** ※※	0.020 -0.512	6.496	4.646	1.102	1.378	2.638	3.543	2.008 (2.539)	2.717	2.717	0.315	0.772 (19.6mm)	2.559 (65mm)
2090 242096 ※※	**-195 -65-** ※※	0.020 -0.512	7.677	4.646	1.102	1.378	2.638	3.543	2.008 (2.539)	2.717	2.717	0.315	0.772 (19.6mm)	2.559 (65mm)
2090 242026 ※※	**-225 -65-** ※※	0.020 -0.512	8.858	4.646	1.102	1.378	2.638	3.543	2.008 (2.539)	2.717	2.717	0.315	0.772 (19.6mm)	2.559 (65mm)
2090 242566 ※※	**CAT40 -AHE2590 -165 -65-** ※※	0.020 -0.630	6.496	4.646	1.102	1.654	2.638	3.543	2.008 (2.539)	2.717	2.717	0.315	0.772 (19.6mm)	2.559 (65mm)
2090 242596 ※※	**-195 -65-** ※※	0.020 -0.630	7.677	4.646	1.102	1.654	2.638	3.543	2.008 (2.539)	2.717	2.717	0.315	0.772 (19.6mm)	2.559 (65mm)
2090 242526 ※※	**-225 -65-** ※※	0.020 -0.630	8.858	4.646	1.102	1.654	2.638	3.543	2.008 (2.539)	2.717	2.717	0.315	0.772 (19.6mm)	2.559 (65mm)

Inch to Metric (mm) → Inch × 25.4
Metric (mm) to Inch → Metric ÷ 25.4 or Metric × 0.03937

Special / Custom Sizes on request

Unit : Inch

Code	Model	d	L	G	E	D	F	H	C (C)	B	I	J	K	S
2090 251168 ※※	CAT50 -AHE1190 -165 -80- ※※	0.020 -0.276	6.496	4.646	0.669	0.906	2.008	3.543	1.299 (1.830)	1.693	1.575	0.394	1.102 (28mm)	3.150 (80mm)
2090 251198 ※※	-195 -80- ※※	0.020 -0.276	7.677	4.646	0.669	0.906	2.008	3.543	1.299 (1.830)	1.693	1.575	0.394	1.102 (28mm)	3.150 (80mm)
2090 251128 ※※	-225 -80- ※※	0.020 -0.276	8.858	4.646	0.669	0.906	2.008	3.543	1.299 (1.830)	1.693	1.575	0.394	1.102 (28mm)	3.150 (80mm)
2090 251158 ※※	-255 -80- ※※	0.020 -0.276	10.039	5.315	0.669	0.906	2.008	3.543	1.299 (1.830)	1.693	1.575	0.394	1.102 (28mm)	3.150 (80mm)
2090 251188 ※※	-285 -80- ※※	0.020 -0.276	11.220	5.315	0.669	0.906	2.008	3.543	1.299 (1.830)	1.693	1.575	0.394	1.102 (28mm)	3.150 (80mm)
2090 251668 ※※	CAT50 -AHE1690 -165 -80- ※※	0.020 -0.394	6.496	4.646	0.866	1.260	2.283	3.543	1.752 (2.303)	2.441	2.559	0.394	1.102 (28mm)	3.150 (80mm)
2090 251698 ※※	-195 -80- ※※	0.020 -0.394	7.677	4.646	0.866	1.260	2.283	3.543	1.752 (2.303)	2.441	2.559	0.394	1.102 (28mm)	3.150 (80mm)
2090 251628 ※※	-225 -80- ※※	0.020 -0.394	8.858	4.646	0.866	1.260	2.283	3.543	1.752 (2.303)	2.441	2.559	0.394	1.102 (28mm)	3.150 (80mm)
2090 251658 ※※	-255 -80- ※※	0.020 -0.394	10.039	5.315	0.866	1.260	2.283	3.543	1.752 (2.303)	2.441	2.559	0.394	1.102 (28mm)	3.150 (80mm)
2090 252068 ※※	CAT50 -AHE2090 -165 -80- ※※	0.020 -0.512	6.496	4.646	1.102	1.378	2.638	3.543	2.008 (2.539)	2.717	2.717	0.394	1.102 (28mm)	3.150 (80mm)
2090 252098 ※※	-195 -80- ※※	0.020 -0.512	7.677	4.646	1.102	1.378	2.638	3.543	2.008 (2.539)	2.717	2.717	0.394	1.102 (28mm)	3.150 (80mm)
2090 252028 ※※	-225 -80- ※※	0.020 -0.512	8.858	4.646	1.102	1.378	2.638	3.543	2.008 (2.539)	2.717	2.717	0.394	1.102 (28mm)	3.150 (80mm)
2090 252568 ※※	CAT50 -AHE2590 -165 -80- ※※	0.020 -0.630	6.496	4.646	1.102	1.654	2.638	3.543	2.008 (2.539)	2.717	2.717	0.394	1.102 (28mm)	3.150 (80mm)
2090 252598 ※※	-195 -80- ※※	0.020 -0.630	7.677	4.646	1.102	1.654	2.638	3.543	2.008 (2.539)	2.717	2.717	0.394	1.102 (28mm)	3.150 (80mm)
2090 252528 ※※	-225 -80- ※※	0.020 -0.630	8.858	4.646	1.102	1.654	2.638	3.543	2.008 (2.539)	2.717	2.717	0.394	1.102 (28mm)	3.150 (80mm)
2090 253288 ※※	CAT50 -AHE3290 -180 -80- ※※	0.098 -0.787	7.087	4.606	1.358	1.969	2.953	4.528	2.244 (2.776)	3.110	2.953	0.394	1.102 (28mm)	3.150 (80mm)
2090 253218 ※※	-210 -80- ※※	0.098 -0.787	8.268	4.606	1.358	1.969	2.953	4.528	2.244 (2.776)	3.110	2.953	0.394	1.102 (28mm)	3.150 (80mm)
2090 253248 ※※	-240 -80- ※※	0.098 -0.787	9.449	4.606	1.358	1.969	2.953	4.528	2.244 (2.776)	3.110	2.953	0.394	1.102 (28mm)	3.150 (80mm)
2090 254098 ※※	CAT50 -AHE4090 -195 -80- ※※	0.118 -1.024	7.677	4.606	1.772	2.480	3.543	4.528	2.874 (3.406)	3.740	3.937	0.394	1.102 (28mm)	3.150 (80mm)
2090 254091 ※※	-195 -110- ※※	0.118 -1.024	7.677	4.606	1.772	2.480	3.543	4.528	2.874 (3.406)	3.740	3.937	0.394	1.102 (28mm)	4.331 (110mm)

1. ※ is for A dimension. Please refer to P. 179.
2. When ordering, please specify plunger size ("A" dimension).
3. Center-thru coolant types are produced upon request.
4. Plunger is fixed (non-adjustable)
5. Collet and spanner are sold separately.

Size	Collet	Nut	Spanner
AHE1190	ER11	HDP-07A	S-0
AHE1690	ER16	ERP-16	FK0030
AHE2090	ER20	ERP-20	FK0034
AHE2590	ER25	ERP-25	HS-1-16
AHE3290	ER32	ERP-32	HS-2-20
AHE4090	ER40	ERP-40	HS-2.5-25

Collet
P. 090~091

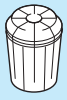

Spanner
P. 95



Ordering Example

CAT40 - AH 11 90 - 165 - 65 - 06

Shank size	Max. collet I.D.	Angle	Projection length (L)	S	Dimension A

Inch to Metric (mm) → Inch × 25.4
Metric (mm) to Inch → Metric ÷ 25.4 or Metric × 0.03937

Special / Custom Sizes on request

AHSE, AHLE

0-90° (Flexible Type)

Angle Heads (ER Collet Type)

0 - 90° Flexible Type

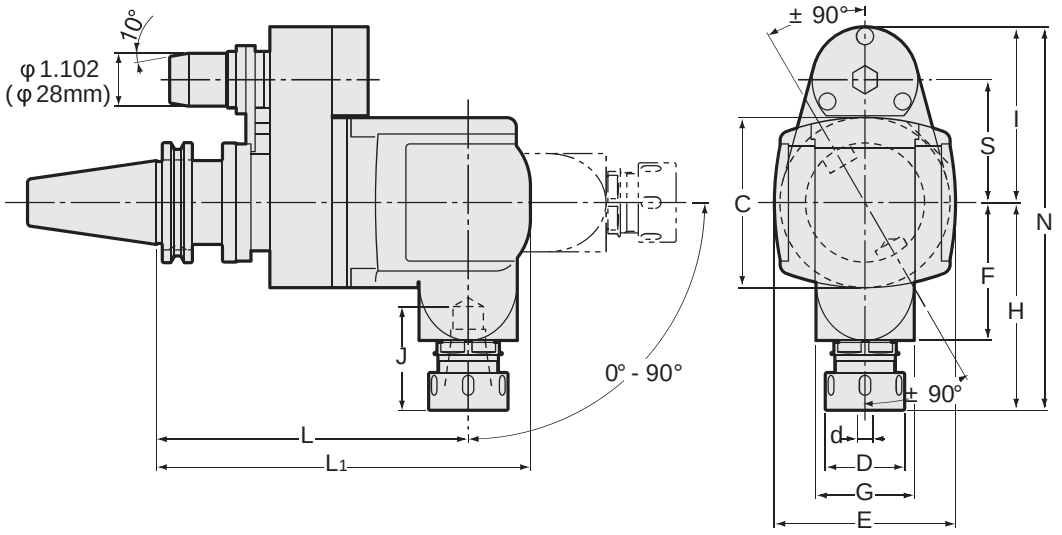

※Requires a positioning block. Please refer to P.179-180.

Unit : Inch

Code	Model	d	L	L1	D	C	E	F	G	H	J	I	N	S
2084 041166 ※※	**CAT40 -AHSE11 -165 -65-** ※※	0.020 -0.276	6.496	7.795	0.906	3.543	3.780	2.874	2.047	3.937	2.559	3.661	7.598	2.559 (65mm)
2084 041666 ※※	**CAT40 -AHSE16 -165 -65-** ※※	0.020 -0.394	6.496	7.795	1.260	3.543	3.780	2.874	2.047	4.331	2.559	3.661	7.992	2.559 (65mm)
2084 042066 ※※	**CAT40 -AHSE20 -165 -65-** ※※	0.020 -0.512	6.496	7.795	1.378	3.543	3.780	2.874	2.047	4.331	2.165	3.661	7.992	2.559 (65mm)
2084 042566 ※※	**CAT40 -AHSE25 -165 -65-** ※※	0.020 -0.630	6.496	7.795	1.654	3.543	3.780	2.874	2.047	4.331	2.165	3.661	7.992	2.559 (65mm)
2084 051168 ※※	**CAT50 -AHSE11 -165 -80-** ※※	0.020 -0.276	6.496	7.795	0.906	3.543	3.780	2.874	2.047	3.937	2.559	4.252	8.189	3.150 (80mm)
2084 051668 ※※	**CAT50 -AHSE16 -165 -80-** ※※	0.020 -0.394	6.496	7.795	1.260	3.543	3.780	2.874	2.047	4.331	2.559	4.252	8.583	3.150 (80mm)
2084 052068 ※※	**CAT50 -AHSE20 -165 -80-** ※※	0.020 -0.512	6.496	7.795	1.378	3.543	3.780	2.874	2.047	4.331	2.165	4.252	8.583	3.150 (80mm)
2084 052568 ※※	**CAT50 -AHSE25 -165 -80-** ※※	0.020 -0.630	6.496	7.795	1.654	3.543	3.780	2.874	2.047	4.331	2.165	4.252	8.583	3.150 (80mm)
2084 051161 ※※	**CAT50 -AHSE11 -165 -110-** ※※	0.020 -0.276	6.496	7.795	0.906	3.543	3.780	2.874	2.047	3.937	2.559	5.433	9.370	4.331 (110mm)
2084 051661 ※※	**CAT50 -AHSE16 -165 -110-** ※※	0.020 -0.394	6.496	7.795	1.260	3.543	3.780	2.874	2.047	4.331	2.559	5.433	9.764	4.331 (110mm)
2084 052061 ※※	**CAT50 -AHSE20 -165 -110-** ※※	0.020 -0.512	6.496	7.795	1.378	3.543	3.780	2.874	2.047	4.331	2.165	5.433	9.764	4.331 (110mm)
2084 052561 ※※	**CAT50 -AHSE25 -165 -110-** ※※	0.020 -0.630	6.496	7.795	1.654	3.543	3.780	2.874	2.047	4.331	2.165	5.433	9.764	4.331 (110mm)

Inch to Metric (mm) → Inch × 25.4
Metric (mm) to Inch → Metric ÷ 25.4 or Metric × 0.03937

Special / Custom Sizes on request

Unit : Inch

Code	Model	d	L	L1	D	C	E	F	G	H	J	I	N	S
2084 152068 ※※	**CAT50 -AHLE20 -165 -80- ※※**	0.020 -0.512	6.496	8.071	1.378	4.331	4.646	3.071	2.598	4.724	2.953	4.252	8.976	3.150 (80mm)
2084 152568 ※※	**CAT50 -AHLE25 -165 -80- ※※**	0.020 -0.630	6.496	8.071	1.654	4.331	4.646	3.071	2.598	4.724	2.953	4.252	8.976	3.150 (80mm)
2084 153268 ※※	**CAT50 -AHLE32 -165 -80- ※※**	0.098 -0.787	6.496	8.071	1.969	4.331	4.646	3.071	2.598	4.724	2.953	4.252	8.976	3.150 (80mm)
2084 152061 ※※	**CAT50 -AHLE20 -165 -110- ※※**	0.020 -0.512	6.496	8.071	1.378	4.331	4.646	3.071	2.598	4.724	2.953	5.433	10.157	4.331 (110mm)
2084 152561 ※※	**CAT50 -AHLE25 -165 -110- ※※**	0.020 -0.630	6.496	8.071	1.654	4.331	4.646	3.071	2.598	4.724	2.953	5.433	10.157	4.331 (110mm)
2084 153261 ※※	**CAT50 -AHLE32 -165 -110- ※※**	0.098 -0.787	6.496	8.071	1.969	4.331	4.646	3.071	2.598	4.724	2.953	5.433	10.157	4.331 (110mm)

Size	Collet	Nut	Spanner
AHSE11	**ER11**	**HDP-07A**	**S-0**
AHSE16	**ER16**	**ERP-16**	**FK0030**
AHSE20	**ER20**	**ERP-20**	**FK0034**
AHSE25	**ER25**	**ERP-25**	**HS-1-16**
AHLE20	**ER20**	**ERP-20**	**FK0034**
AHLE25	**ER25**	**ERP-25**	**HS-1-16**
AHLE32	**ER32**	**ERP-32**	**HS-2-20**

1. ※ is for A dimension. Please refer to P. 179.
2. When ordering, please specify plunger size ("A" dimension).
3. Center-thru coolant types are produced upon request.
4. Plunger is fixed (non-adjustable)
5. Collet and spanner are sold separately.

Collet
P. 090~091



Spanner
P. 95



Ordering Example

CAT40	-	AHSE	11	-	165	-	65	-	06
Shank size			Max. collet I.D.		Projection length (L)		S		Dimension A

HDC•A-CS

Collet type Coolant Inducer

Type 1

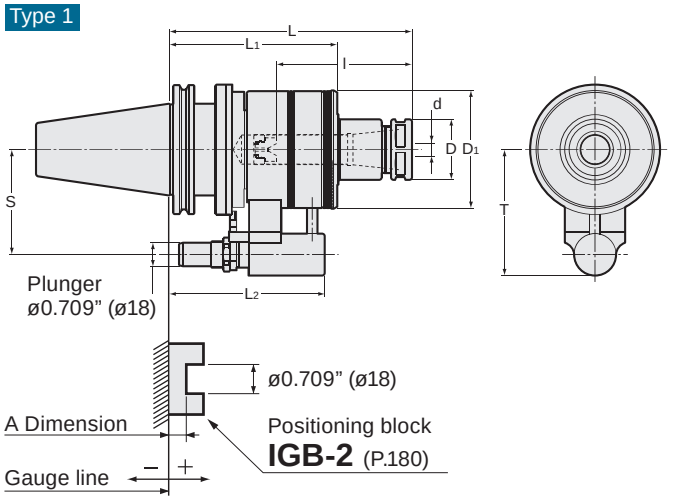

Type 2

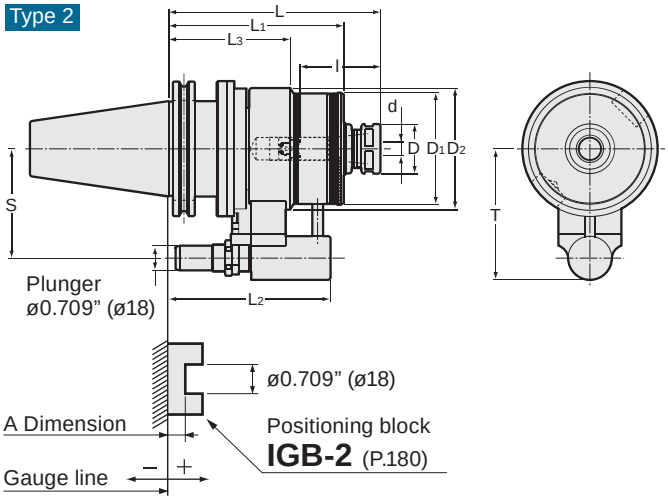

Unit:Inch

Code	Model	Type	d	L	B	l	L1	L2	L3	D	D1	D2	T	S	MAX min^{-1}	Max. Coolant	Seal Unit
1890 8416150 ※	**CAT40 -HDC16A -150CS-** ※	**2**	0.236 -0.630	5.910	0.0 -0.236	1.496 -2.559	5.079	4.704	3.543	1.417	3.228	3.504	3.189	2.559 (65mm)	6,000	2MPa	CS-2
1890 8422165 ※	**CAT40 -HDC22A -165CS-** ※	**1**	0.236 -0.866	6.500	0.0 -0.315	1.860 -4.055	5.079	4.704	—	1.811	3.543	—	3.189	2.559 (65mm)	5,000	2MPa	CS-3
1890 8516155 ※	**CAT50 -HDC16A -155CS-** ※	**2**	0.236 -1.630	6.100	0.0 -0.236	1.496 -2.559	5.039	4.665	3.504	1.417	3.228	3.504	3.780	3.150 (80mm)	6,000	2MPa	CS-2
1890 8522185 ※	**CAT50 -HDC22A -185CS-** ※	**1**	0.236 -0.866	7.280	0.0 -0.315	1.860 -4.055	5.039	4.665	—	1.811	3.543	—	3.780	3.150 (80mm)	5,000	2MPa	CS-3

Type		Plunger No.				
		No.1	No.2	No.3	No.4	No.5
		A	A	A	A	A
CAT40	HDC-A	+1.299" ~ +0.909" (+33mm ~ +23.1mm)	+0.906" ~ +0.516" (+23mm ~ +13.1mm)	+0.512" ~ +0.122" (+13mm ~ +3.1mm)	+0.118" ~ – 0.272" (+3mm ~ – 6.9mm)	– 0.276" ~ – 0.665" (– 7mm ~ – 16.9mm)
CAT50	HDC-A	+1.417" ~ +1.027" (+36mm ~ +26.1mm)	+1.023" ~ +0.633" (+26mm ~ +16.1mm)	+0.629" ~ +0.240" (+16mm ~ +6.1mm)	+0.236" ~ – 0.153" (+6mm ~ – 3.9mm)	– 0.157" ~ – 0.547" (– 4mm ~ – 13.9mm)

Model	Nut	Collet	Spanner
HDC16A	**HDP-16**	**FDC-16-OH,-C**	**S-4L**
HDC22A	**HDC-22**	**FDC-22-OH,-C**	**S-5L**

1. Coolant collet and spanner are sold separately.
2. When ordering, please specify the plunger number(No.1~No.5).
3. Plunger is adjustable. Please refer to a chart on the right.
4. Refer to P. 092 for minimum tool insertion length in case of using our coolant collets (OH,C).
5. ℓ1dimensions in brackets are for using preset screw.
6. Seal unit can be replaced by customer.

Seal unit
P. 178
Collet
P. 087-088
Spanner
P. 095

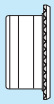
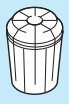


Ordering Example

CAT40 - **HDC** **07** **A** - **165** **CS** - **1**

Shank size | Max. collet I.D. | Projection length (L) | Plunger No.

Inch to Metric (mm) → Inch × 25.4
Metric (mm) to Inch → Metric ÷ 25.4 or Metric × 0.03937

Special / Custom Sizes on request

CT·S-CS

Super Tite-Lock Milling Chuck type Coolant Inducer

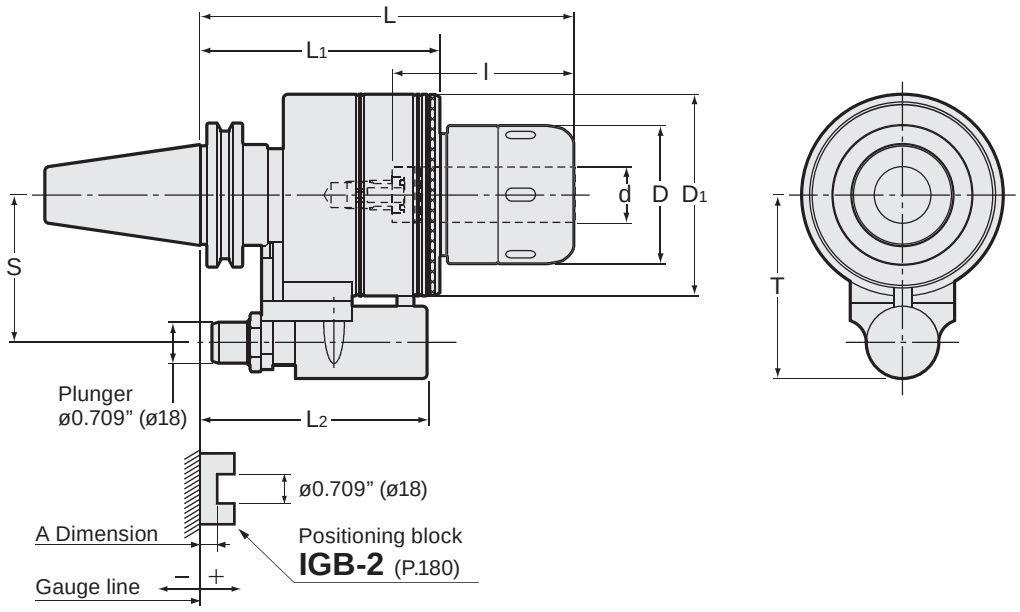

Inch Sizes

Unit : Inch

Code	Model			d	L	B	L1	L2	D	D1	D2	T	S	MAX min^{-1}	Max. Coolant	Seal Unit	kg	Spanner
1890 2424195 ※	CAT40	-CT0750S	-195CS- ※	0.750	7.677	2.756	4.923	4.549	2.047	3.543	3.504	3.189	2.559 (65mm)	5,000	2MPa	CS-3		HS-2-20
1890 2440195 ※	CAT40	-CT1250S	-195CS- ※	1.250	7.677	3.150	5.039	4.587	2.874	3.937	-	3.189	2.559 (65mm)	4,000	2MPa	CS-4		HS-3-32
1890 2524200 ※	CAT50	-CT0750S	-200CS- ※	0.750	7.874	2.756	5.039	4.665	2.047	3.543	3.504	3.780	3.150 (80mm)	5,000	2MPa	CS-3		HS-2-20
1890 2540200 ※	CAT50	-CT1250S	-200CS- ※	1.250	7.874	3.150	5.118	4.665	2.874	3.937	-	3.780	3.150 (80mm)	4,000	2MPa	CS-4	10.2	HS-3-32

Type		Plunger				
		No.1	No.2	No.3	No.4	No.5
CAT40	CT	A +0.909 ~ +1.299	A +0.516 ~ +0.906	A +0.122 ~ +0.512	A -0.271 ~ +0.118	A -0.665 ~ -0.276
CAT50	CT					

1. When ordering, please specify the plunger number(No.1~No.5).
2. Plunger is adjustable. Please refer to a chart on the right.
3. Please return your coolant holder to us through your dealer for seal unit replacement.
4. When ordering, indicate number of spanners required. "No charge" spanners are limited to number of milling chucks on order.
5. Accessories cannot be used except for MC-C and MC-OH.
6. Tolerance of cutting tool shank must be h7.

MC-OH.MC-C Collet
P. 66-67

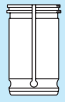

Seal unit
P. 178

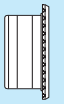

Spanner
P. 069



Ordering Example

CAT40 - CT 0750 S - 195 CS - 1

Shank size | I.D. (d) | Projection length (L) | Plunger No.

Inch to Metric (mm) → Inch × 25.4
Metric (mm) to Inch → Metric ÷ 25.4 or Metric × 0.03937

Special / Custom Sizes on request

PSC

Retention Studs CT Taper

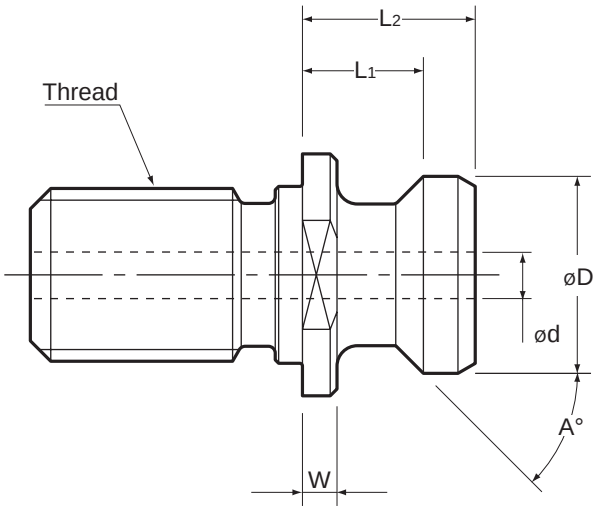

Unit : Inch

Model	D	L1	L2	Angle	W	Thread	d	Shank size	Description
PSC40-1	**0.74**	**0.440**	**0.64**	45°	0.12	5/8"-11	0.275	CAT40	ANSI Standard , With a coolant hole
PSC50-1	**1.14**	**0.700**	**1.00**	45°	0.20	1"-8	0.464	CAT50	ANSI Standard , With a coolant hole

Please check dimensions with your machine spindle specs.

Inch to Metric (mm) → Inch × 25.4
Metric (mm) to Inch → Metric ÷ 25.4 or Metric × 0.03937

Special / Custom Sizes on request

CAT

Tool Shank Dimensions For CAT

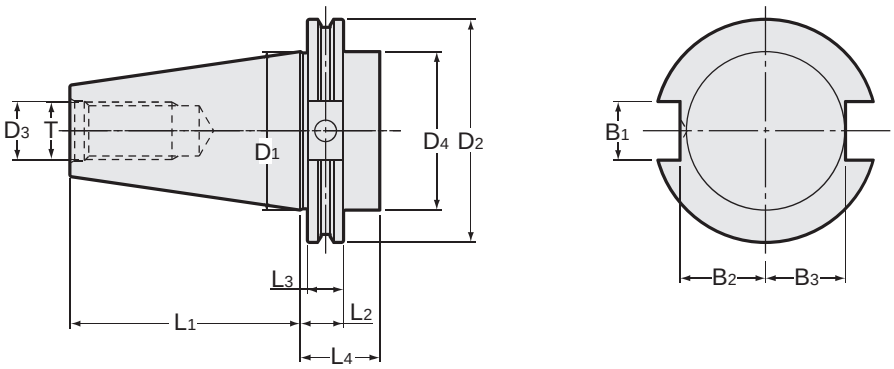

Unit : Inch

Model	D1	D2	D3	D4	T	L1	L2	L3	L4	B1	B2	B3
CAT40	1.750	2.500	0.641	1.750	5/8"-11	2.687	0.750	0.625	1.38Min.	0.645	0.985	0.890
CAT50	2.750	3.875	1.031	2.750	1"-8	4.000	0.750	0.625	1.38Min.	1.020	1.485	1.390

Inch to Metric (mm) → Inch × 25.4
Metric (mm) to Inch → Metric ÷ 25.4 or Metric × 0.03937

Special / Custom Sizes on request

MEMO

AHO

AHO TOOLING SYSTEM

CT·S

Super tite-lock Milling Chuck

※ AHO Retention Stud is required.

● Slim design milling chuck. Specially designed slits enable heavy endmilling.

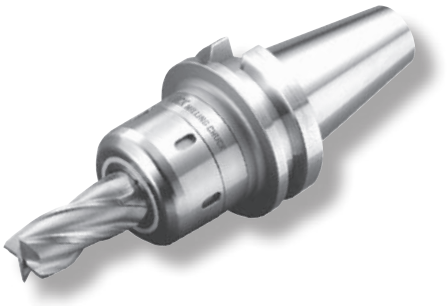

Type1

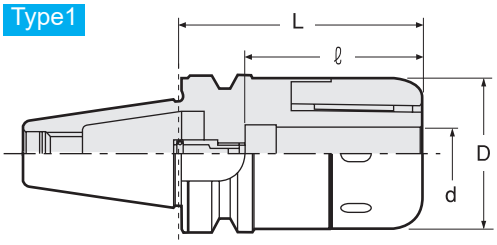

Type2

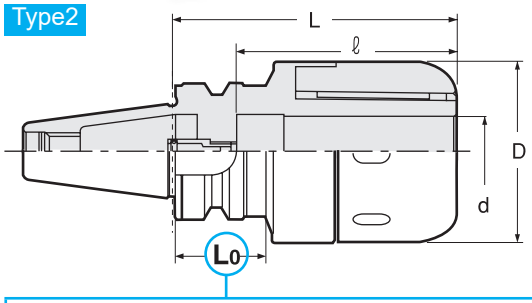

Type3

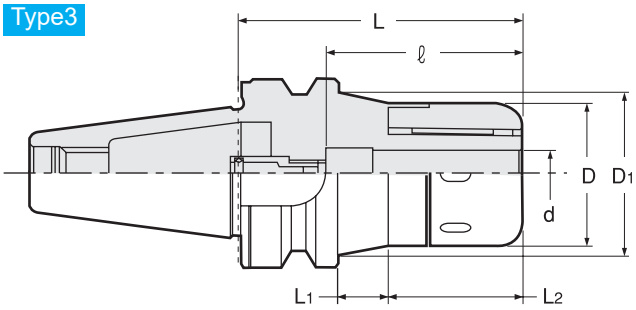

⚠ Caution

★ :Take caution against A.T.C. arm and tool magazine interference.

Caution

Please rotate the clamping ring counterclockwise more than 360 degrees after a cutting tool is removed.

⚠
- Our two-face contact NBT spindle is incompatible with BT two-face contact spindle (for WBT-AHO). Please refer to P. 41.
- When AHO is used with center through coolant feeding, a designated retention stud (with coolant pipe) for AHO must be used.

Metric Sizes

Unit : Metric

Code	Model		Type	d	D	D1	L	L1	L2	ℓ	L0	kg	Stopper Bolt	Spanner
3860 ※ 0010000	NBT-AHO30 or WBT-AHO30	-CT16S -75 * 1	1	16	45	—	75	—	—	55	—	0.9	unusable	HS- 1 -16
3860 ※ 0020000		-90	1	16	45	—	90	—	—	70	—	1.0		
3860 ※ 0030000	NBT-AHO30 or WBT-AHO30	-CT20S -75 * 4	2	20	52	—	75	—	—	55	★ 27	1.0	unusable	HS- 2 -20
3860 ※ 0040000		-90 * 3	2	20	52	—	90	—	—	70	42	1.1		
3860 ※ 0050000		-105	2	20	52	—	105	—	—	80	57	1.3		
3860 ※ 0060000	NBT-AHO30 or WBT-AHO30	-CT25S -90 * 1	2	25	61	—	90	—	—	70	★ 31	1.4	unusable	HS-2.5 -25
3860 ※ 0070000		-105	2	25	61	—	105	—	—	80	44	1.6		
3860 ※ 0440000	NBT-AHO30 or WBT-AHO30	-CT32S -90	2	32	68	—	90	—	—	68	★ 30	1.6	unusable	HS- 3 -32
3860 ※ 0080000	NBT-AHO40 or WBT-AHO40	-CT16S -75	1	16	45	—	75	—	—	60	—	1.3	unusable	HS- 1 -16
3860 ※ 0090000		-90	1	16	45	—	90	—	—	65	—	1.4		
3860 ※ 0100000	NBT-AHO40 or WBT-AHO40	-CT20S -75 * 1	1	20	52	—	75	—	—	60	—	1.4	unusable	HS- 2 -20
3860 ※ 0110000		-90	1	20	52	—	90	—	—	75	—	1.6		
3860 ※ 0120000		-105	1	20	52	—	105	—	—	80	—	1.8		
3860 ※ 0130000		-120	1	20	52	—	120	—	—	80	—	2.1	BL20- ※※	
3860 ※ 0140000	NBT-AHO40 or WBT-AHO40	-CT25S -90	1	25	61	—	90	—	—	75	—	1.8	unusable	HS-2.5 -25
3860 ※ 0150000		-105	1	25	61	—	105	—	—	80	—	2.2		
3860 ※ 0160000		-120	1	25	61	—	120	—	—	80	—	2.5	BL20- ※※	
3860 ※ 0170000		-135	1	25	61	—	135	—	—	80	—	2.8		
3860 ※ 0180000	NBT-AHO40 or WBT-AHO40	-CT32S -90 * 2	2	32	73	—	90	—	—	75	★ 31	2.2	unusable	HS- 3 -32
3860 ※ 0190000		-105 * 2	2	32	73	—	105	—	—	85	46	2.5		
3860 ※ 0200000		-120 * 2	2	32	73	—	120	—	—	90	61	2.8	BL20- ※※	
3860 ※ 0210000		-135	2	32	73	—	135	—	—	105	76	3.1		

Inch to Metric (mm) → Inch × 25.4
Metric (mm) to Inch → Metric ÷ 25.4 or Metric × 0.03937

Special / Custom Sizes on request

Metric Sizes

Unit : Metric

Code	Model	Type	d	D	D1	L	L1	L2	ℓ	L0	kg	Stopper Bolt	Spanner
3860 ※ 0220000	NBT-AHO50 or WBT-AHO50 -CT16S -90	3	16	45	58	90	7	45	65	—	3.4	unusable	HS- 1 -16
3860 ※ 0230000	-105	3	16	45	70	105	22	45	65	—	3.7	BL16- ＊＊	
3860 ※ 0240000	NBT-AHO50 or WBT-AHO50 -CT20S -90 ＊1	3	20	52	65	90	7	45	65	—	3.5	unusable	HS- 2 -20
3860 ※ 0250000	-105	3	20	52	65	105	7	60	80	—	3.7		
3860 ※ 0260000	-120	3	20	52	70	120	24	58	80	—	4.1	BL20- ＊＊	
3860 ※ 0270000	-135	3	20	52	73	135	39	58	80	—	4.5		
3860 ※ 0280000	NBT-AHO50 or WBT-AHO50 -CT25S -105	3	25	61	82	105	11	56	80	—	4.0	unusable	HS-2.5 -25
3860 ※ 0290000	-120	3	25	61	82	120	26	56	80	—	4.5	BL20- ＊＊	
3860 ※ 0300000	-135	3	25	61	83	135	41	56	80	—	5.0		
3860 ※ 0310000	-165	3	25	61	86	165	71	56	80	—	6.0		
3860 ※ 0320000	NBT-AHO50 or WBT-AHO50 -CT32S -95 ＊2	1	32	73	—	95	—	—	75	—	4.1	unusable	HS- 3 -32
3860 ※ 0330000	-105 ＊2	1	32	73	—	105	—	—	85	—	4.3		
3860 ※ 0340000	-120	3	32	73	87	120	26	56	100	—	4.9		
3860 ※ 0350000	-135	3	32	73	88	135	41	56	105	—	5.5		
3860 ※ 0360000	-150	3	32	73	87	150	56	56	110	—	6.0	BL32- ＊＊	
3860 ※ 0370000	-165	3	32	73	86	165	71	56	120	—	6.5		
3860 ※ 0380000	NBT-AHO50 or WBT-AHO50 -CT42S -95 ＊4	1	42	88	—	95	—	—	75	—	4.5	unusable	HS- 4 -42
3860 ※ 0390000	-105 ＊1	1	42	88	—	105	—	—	85	—	4.9		
3860 ※ 0400000	-120 ＊1	1	42	88	—	120	—	—	100	—	5.5		
3860 ※ 0410000	-135 ＊1	1	42	88	—	135	—	—	105	—	6.1		
3860 ※ 0420000	-150 ＊1	1	42	88	—	150	—	—	110	—	6.8	BL32- ＊＊	
3860 ※ 0430000	-165	1	42	88	—	165	—	—	120	—	7.4		

Please replace ※ in the code with 0 for NBT-AHO and 6 for WBT-AHO.

1.When ordering, indicate number of spanners required. “No charge” spanners are limited to number of milling chucks on order.
2.Tolerance of cutting tool shank must be h7.
3.Straight collet MCA cannot be used.

Accessories

Models with ＊1 - ＊4 cannot be used with some accessories due to short ℓ length.

	Straight Collet		Morse Taper Adapter		Jacobs Adapter	
	MC (P.066)	MCA (P.067)	MA (P.068)	MAB (P.068)	JA (P.069)	JAB (P.069)
＊1	Yes	No	No	No	No	No
＊2	Yes	No	No	Yes	No	Yes
＊3	Yes	No	Yes	No	Yes	No
＊4	No	No	No	No	No	No

Min. chucking length

Without MC collet

I.D.of Milling Chuck	Min. chucking length
16、20	40
25、32、42	50

With MC collet

Collet I.D.	Min. chucking length	
	MC	MC-C、MC-OH
6、8	30	30
10、12	40	40
16、20	45	45
25	50	50
32	50	60

Ordering Example

Corresponding to our two-face contact BT spindle

NBT-AHO30 - CT 16 S - 75

AHO Shank size / I.D. (d) / Projection length (L)

Ordering Example

Corresponding to BT two-face contact spindle

WBT-AHO30 - CT 16 S - 75

AHO Shank size / I.D. (d) / Projection length (L)

Spanner

P. 069



Inch to Metric (mm) → Inch × 25.4
Metric (mm) to Inch → Metric ÷ 25.4 or Metric × 0.03937

Special / Custom Sizes on request

HDC·A

High-Precision Collet Holder

※ AHO Retention Stud is required.

● Suitable for drilling, reaming and finish endmilling.

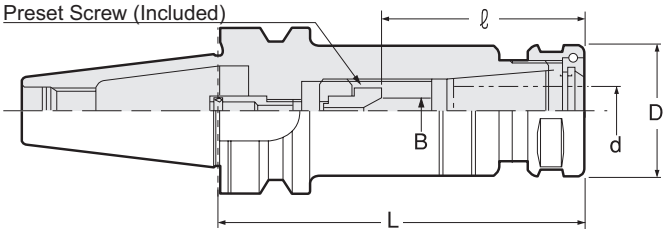

⚠ • Our two-face contact NBT spindle is incompatible with BT two-face contact spindle (for WBT-AHO). Please refer to P. 41.
• When AHO is used with center through coolant feeding, a designated retention stud (with coolant pipe) for AHO must be used.

Unit : Metric

Code	Model		d	L	ℓ	B	D	Nut	kg	Collet	Spanner
3830 ※ 0640000	**NBT-AHO30 or WBT-AHO30**	**-HDC07A -45**	0.5 ~ 7.0	45	26	—	23	HDP-07A		FDC-07	S-0
3830 ※ 0650000		**-60**	0.5 ~ 7.0	60	22 ~ 23	0 ~ 4	23	HDP-07A			
3830 ※ 0660000		**-75**	0.5 ~ 7.0	75	22 ~ 38	0 ~ 4	23	HDP-07A	0.5		
3830 ※ 0670000		**-90**	0.5 ~ 7.0	90	22 ~ 45	0 ~ 4	23	HDP-07A	0.5		
3830 ※ 0680000		**-105**	0.5 ~ 7.0	105	22 ~ 45	0 ~ 4	23	HDP-07A			
3830 ※ 0690000	**NBT-AHO30 or WBT-AHO30**	**-HDC09A -60**	2.5 ~ 9.0	60	40	—	26	HDP-09		FDC-09	S-1L
3830 ※ 0700000		**-75**	2.5 ~ 9.0	75	27 ~ 40	0 ~ 4	26	HDP-09	0.5		
3830 ※ 0710000		**-90**	2.5 ~ 9.0	90	27 ~ 50	0 ~ 4	26	HDP-09	0.6		
3830 ※ 0720000		**-105**	2.5 ~ 9.0	105	27 ~ 57	0 ~ 4	26	HDP-09	0.6		
3830 ※ 0850000		**-120**	2.5 ~ 9.0	120	27 ~ 57	0 ~ 4	26	HDP-09	0.7		
3830 ※ 0730000	**NBT-AHO30 or WBT-AHO30**	**-HDC12A -60**	2.5 ~ 12.0	60	40	—	32	HDP-12	0.5	FDC-12	S-3L
3830 ※ 0740000		**-75**	2.5 ~ 12.0	75	33 ~ 40	0 ~ 5	32	HDP-12	0.6		
3830 ※ 0750000		**-90**	2.5 ~ 12.0	90	33 ~ 55	0 ~ 5	32	HDP-12	0.7		
3830 ※ 0760000		**-105**	2.5 ~ 12.0	105	33 ~ 65	0 ~ 5	32	HDP-12	0.7		
3830 ※ 0860000		**-120**	2.5 ~ 12.0	120	33 ~ 69	0 ~ 5	32	HDP-12			
3830 ※ 0770000	**NBT-AHO30 or WBT-AHO30**	**-HDC16A -75**	3.5 ~ 16.0	75	38 ~ 41	0 ~ 6	36	HDP-16		FDC-16	S-4L
3830 ※ 0780000		**-90**	3.5 ~ 16.0	90	38 ~ 50	0 ~ 6	36	HDP-16	0.7		
3830 ※ 0790000		**-105**	3.5 ~ 16.0	105	38 ~ 65	0 ~ 6	36	HDP-16	0.8		
3830 ※ 0800000		**-120**	3.5 ~ 16.0	120	38 ~ 80	0 ~ 6	36	HDP-16	0.9		
3830 ※ 0820000	**NBT-AHO30 or WBT-AHO30**	**-HDC22A -75**	3.5 ~ 22.0	75	56	—	46	HDP-22	0.7	FDC-22	S-5L
3830 ※ 0830000		**-90**	3.5 ~ 22.0	90	47 ~ 54	0 ~ 8	46	HDP-22	0.9		
3830 ※ 0840000		**-105**	3.5 ~ 22.0	105	47 ~ 69	0 ~ 8	46	HDP-22	1.0		
3830 ※ 0880000		**-120**	3.5 ~ 22.0	120	47 ~ 75	0 ~ 8	46	HDP-22	1.2		
3830 ※ 0870000	**NBT-AHO40 or WBT-AHO40**	**-HDC07A -75**	0.5 ~ 7.0	75	22 ~ 35	0 ~ 4	23	HDP-07A	0.9	FDC-07	S-0
3830 ※ 0010000		**-90**	0.5 ~ 7.0	90	22 ~ 45	0 ~ 4	23	HDP-07A	0.9		
3830 ※ 0020000		**-105**	0.5 ~ 7.0	105	22 ~ 45	0 ~ 4	23	HDP-07A	0.9		
3830 ※ 0030000		**-120**	0.5 ~ 7.0	120	22 ~ 45	0 ~ 4	23	HDP-07A			
3830 ※ 0890000		**-135**	0.5 ~ 7.0	135	22 ~ 45	0 ~ 4	23	HDP-07A			
3830 ※ 0040000	**NBT-AHO40 or WBT-AHO40**	**-HDC09A -90**	2.5 ~ 9.0	90	27 ~ 55	0 ~ 4	26	HDP-09		FDC-09	S-1L
3830 ※ 0050000		**-105**	2.5 ~ 9.0	105	27 ~ 57	0 ~ 4	26	HDP-09	1.1		
3830 ※ 0060000		**-120**	2.5 ~ 9.0	120	27 ~ 57	0 ~ 4	26	HDP-09			
3830 ※ 0070000		**-135**	2.5 ~ 9.0	135	27 ~ 57	0 ~ 4	26	HDP-09			
3830 ※ 0080000		**-165**	2.5 ~ 9.0	165	27 ~ 57	0 ~ 4	26	HDP-09			
3830 ※ 0090000	**NBT-AHO40 or WBT-AHO40**	**-HDC12A -90**	2.5 ~ 12.0	90	33 ~ 55	0 ~ 5	32	HDP-12	1.1	FDC-12	S-3L
3830 ※ 0100000		**-105**	2.5 ~ 12.0	105	33 ~ 69	0 ~ 5	32	HDP-12	1.2		
3830 ※ 0110000		**-120**	2.5 ~ 12.0	120	33 ~ 69	0 ~ 5	32	HDP-12	1.3		
3830 ※ 0120000		**-135**	2.5 ~ 12.0	135	33 ~ 69	0 ~ 5	32	HDP-12			
3830 ※ 0130000		**-165**	2.5 ~ 12.0	165	33 ~ 69	0 ~ 5	32	HDP-12	1.5		
3830 ※ 0140000		**-195**	2.5 ~ 12.0	195	33 ~ 69	0 ~ 5	32	HDP-12			

Inch to Metric (mm) → Inch × 25.4
Metric (mm) to Inch → Metric ÷ 25.4 or Metric × 0.03937

Special / Custom Sizes on request

Unit : Metric

Code	Model	d	L	ℓ	B	D	Nut	kg	Collet	Spanner
3830 ※ 0150000	NBT-AHO40 or WBT-AHO40 -HDC16A -90	3.5 ~ 16.0	90	38 ~ 55	0 ~ 6	36	HDP-16		FDC-16	S-4L
3830 ※ 0160000	-105	3.5 ~ 16.0	105	38 ~ 70	0 ~ 6	36	HDP-16	1.2		
3830 ※ 0170000	-120	3.5 ~ 16.0	120	38 ~ 82	0 ~ 6	36	HDP-16	1.3		
3830 ※ 0180000	-135	3.5 ~ 16.0	135	38 ~ 82	0 ~ 6	36	HDP-16			
3830 ※ 0190000	-165	3.5 ~ 16.0	165	38 ~ 82	0 ~ 6	36	HDP-16			
3830 ※ 0200000	-195	3.5 ~ 16.0	195	38 ~ 82	0 ~ 6	36	HDP-16			
3830 ※ 0210000	NBT-AHO40 or WBT-AHO40 -HDC22A -105	3.5 ~ 22.0	105	47 ~ 65	0 ~ 8	46	HDP-22	1.4	FDC-22	S-5L
3830 ※ 0220000	-120	3.5 ~ 22.0	120	47 ~ 80	0 ~ 8	46	HDP-22			
3830 ※ 0230000	-135	3.5 ~ 22.0	135	47 ~ 95	0 ~ 8	46	HDP-22			
3830 ※ 0240000	-165	3.5 ~ 22.0	165	47 ~ 103	0 ~ 8	46	HDP-22			
3830 ※ 0250000	-195	3.5 ~ 22.0	195	47 ~ 103	0 ~ 8	46	HDP-22			
3830 ※ 0260000	NBT-AHO50 or WBT-AHO50 -HDC07A -90	0.5 ~ 7.0	90	22 ~ 45	0 ~ 4	23	HDP-07A		FDC-07	S-0
3830 ※ 0270000	-105	0.5 ~ 7.0	105	22 ~ 45	0 ~ 4	23	HDP-07A			
3830 ※ 0280000	-120	0.5 ~ 7.0	120	22 ~ 45	0 ~ 4	23	HDP-07A			
3830 ※ 0290000	-135	0.5 ~ 7.0	135	22 ~ 45	0 ~ 4	23	HDP-07A			
3830 ※ 0300000	-165	0.5 ~ 7.0	165	22 ~ 45	0 ~ 4	23	HDP-07A			
3830 ※ 0310000	-195	0.5 ~ 7.0	195	22 ~ 45	0 ~ 4	23	HDP-07A			
3830 ※ 0320000	NBT-AHO50 or WBT-AHO50 -HDC09A -90	2.5 ~ 9.0	90	27 ~ 47	0 ~ 4	26	HDP-09		FDC-09	S-1L
3830 ※ 0330000	-105	2.5 ~ 9.0	105	27 ~ 57	0 ~ 4	26	HDP-09			
3830 ※ 0340000	-120	2.5 ~ 9.0	120	27 ~ 57	0 ~ 4	26	HDP-09			
3830 ※ 0350000	-135	2.5 ~ 9.0	135	27 ~ 57	0 ~ 4	26	HDP-09			
3830 ※ 0360000	-165	2.5 ~ 9.0	165	27 ~ 57	0 ~ 4	26	HDP-09			
3830 ※ 0370000	-195	2.5 ~ 9.0	195	27 ~ 57	0 ~ 4	26	HDP-09			
3830 ※ 0380000	-225	2.5 ~ 9.0	225	27 ~ 57	0 ~ 4	26	HDP-09			
3830 ※ 0390000	-255	2.5 ~ 9.0	255	27 ~ 57	0 ~ 4	26	HDP-09			
3830 ※ 0400000	NBT-AHO50 or WBT-AHO50 -HDC12A -90	3.5 ~ 12.0	90	33 ~ 47	0 ~ 5	32	HDP-12	3.1	FDC-12	S-3L
3830 ※ 0410000	-105	3.5 ~ 12.0	105	33 ~ 62	0 ~ 5	32	HDP-12			
3830 ※ 0420000	-120	3.5 ~ 12.0	120	33 ~ 69	0 ~ 5	32	HDP-12			
3830 ※ 0430000	-135	3.5 ~ 12.0	135	33 ~ 69	0 ~ 5	32	HDP-12			
3830 ※ 0440000	-165	3.5 ~ 12.0	165	33 ~ 69	0 ~ 5	32	HDP-12			
3830 ※ 0450000	-195	3.5 ~ 12.0	195	33 ~ 69	0 ~ 5	32	HDP-12			
3830 ※ 0460000	-225	3.5 ~ 12.0	225	33 ~ 69	0 ~ 5	32	HDP-12			
3830 ※ 0470000	-255	3.5 ~ 12.0	255	33 ~ 69	0 ~ 5	32	HDP-12			
3830 ※ 0480000	NBT-AHO50 or WBT-AHO50 -HDC16A -90	3.5 ~ 16.0	90	38 ~ 48	0 ~ 6	36	HDP-16		FDC-16	S-4L
3830 ※ 0490000	-105	3.5 ~ 16.0	105	38 ~ 63	0 ~ 6	36	HDP-16			
3830 ※ 0500000	-120	3.5 ~ 16.0	120	38 ~ 78	0 ~ 6	36	HDP-16			
3830 ※ 0510000	-135	3.5 ~ 16.0	135	38 ~ 82	0 ~ 6	36	HDP-16			
3830 ※ 0520000	-165	3.5 ~ 16.0	165	38 ~ 82	0 ~ 6	36	HDP-16			
3830 ※ 0530000	-195	3.5 ~ 16.0	195	38 ~ 82	0 ~ 6	36	HDP-16			
3830 ※ 0540000	-225	3.5 ~ 16.0	225	38 ~ 82	0 ~ 6	36	HDP-16			
3830 ※ 0550000	-255	3.5 ~ 16.0	255	38 ~ 82	0 ~ 6	36	HDP-16			
3830 ※ 0560000	NBT-AHO50 or WBT-AHO50 -HDC22A -105	3.5 ~ 22.0	105	47 ~ 67	0 ~ 8	46	HDP-22	3.4	FDC-22	S-5L
3830 ※ 0570000	-120	3.5 ~ 22.0	120	47 ~ 82	0 ~ 8	46	HDP-22			
3830 ※ 0580000	-135	3.5 ~ 22.0	135	47 ~ 97	0 ~ 8	46	HDP-22			
3830 ※ 0590000	-150	3.5 ~ 22.0	150	47 ~ 103	0 ~ 8	46	HDP-22			
3830 ※ 0600000	-165	3.5 ~ 22.0	165	47 ~ 103	0 ~ 8	46	HDP-22			
3830 ※ 0610000	-195	3.5 ~ 22.0	195	47 ~ 103	0 ~ 8	46	HDP-22			
3830 ※ 0620000	-225	3.5 ~ 22.0	225	47 ~ 103	0 ~ 8	46	HDP-22			
3830 ※ 0630000	-255	3.5 ~ 22.0	255	47 ~ 103	0 ~ 8	46	HDP-22			

Please replace ※ in the code with 1 for NBT-AHO and 6 for WBT-AHO.

1. Collet, spanner, and preset screw for semi-dry processing are sold separately. Standard preset screw is included.
2. Refer to P.092 for minimum tool insertion length in case of using our coolant collets (OH,C or MS).
3. ℓ indicates dimension when using with a preset screw.
4. See P.499 for standard Tightening Torque.

Collet P. 086 - 089
Spanner P. 95
Preset screw P. 094

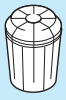



Ordering Example

Corresponding to our two-face contact BT spindle

NBT-AHO30 - HDC 12 A - 90

Shank size | Max. collet I.D. | Projection length (L)

Ordering Example

Corresponding to BT two-face contact spindle

WBT-AHO30 - HDC 12 A - 90

Shank size | Max. collet I.D. | Projection length (L)

Inch to Metric (mm) → Inch × 25.4
Metric (mm) to Inch → Metric ÷ 25.4 or Metric × 0.03937

Special / Custom Sizes on request

SDM

Drill Holder With Easy Tool Length Adjustment

※ AHO Retention Stud is required.

● Projection length of the cutting tool can be adjusted by simply turning circumference of the holder.



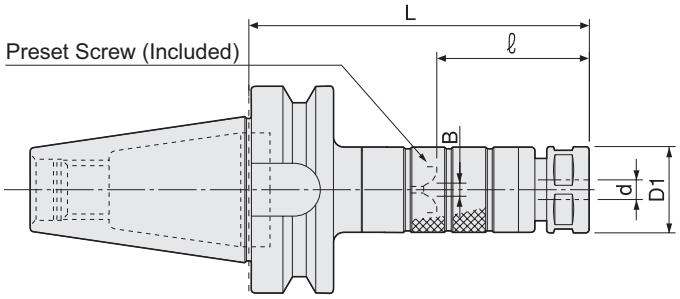

• Our two-face contact NBT spindle is incompatible with BT two-face contact spindle (for WBT-AHO). Please refer to P. 41.
• When AHO is used with center through coolant feeding, a designated retention stud (with coolant pipe) for AHO must be used.

Unit : Metric

Code	Model		d	L	ℓ	B	D1	Nut	Collet	Spanner
3750 ※ 0010000	**NBT-AHO30 or WBT-AHO30**	**-SDM07 -75**	0.5 ~ 7.0	75	29 ~ 39	0 ~ 4	23	HDP-07A	FDC-07	S-0
3750 ※ 0020000		**-90**	0.5 ~ 7.0	90	29 ~ 54	0 ~ 4	23	HDP-07A		
3750 ※ 0030000		**-105**	0.5 ~ 7.0	105	29 ~ 54	0 ~ 4	23	HDP-07A		
3750 ※ 0040000		**-120**	0.5 ~ 7.0	120	29 ~ 54	0 ~ 4	23	HDP-07A		
3750 ※ 0050000		**-135**	0.5 ~ 7.0	135	29 ~ 54	0 ~ 4	23	HDP-07A		
3750 ※ 0060000		**-150**	0.5 ~ 7.0	150	29 ~ 54	0 ~ 4	23	HDP-07A		
3750 ※ 0070000	**NBT-AHO30 or WBT-AHO30**	**-SDM09 -90**	2.5 ~ 9.0	90	28 ~ 38	0 ~ 4	26	HDP-09	FDC-09	S-1L
3750 ※ 0080000		**-105**	2.5 ~ 9.0	105	28 ~ 53	0 ~ 4	26	HDP-09		
3750 ※ 0090000		**-120**	2.5 ~ 9.0	120	28 ~ 53	0 ~ 4	26	HDP-09		
3750 ※ 0100000		**-135**	2.5 ~ 9.0	135	28 ~ 53	0 ~ 4	26	HDP-09		
3750 ※ 0110000		**-150**	2.5 ~ 9.0	150	28 ~ 53	0 ~ 4	26	HDP-09		
3750 ※ 0120000		**-165**	2.5 ~ 9.0	165	28 ~ 53	0 ~ 4	26	HDP-09		
3750 ※ 0130000	**NBT-AHO30 or WBT-AHO30**	**-SDM12 -90**	2.5 ~ 12.0	90	34 ~ 44	0 ~ 5	32	HDP-12	FDC-12	S-3L
3750 ※ 0140000		**-105**	2.5 ~ 12.0	105	34 ~ 59	0 ~ 5	32	HDP-12		
3750 ※ 0150000		**-120**	2.5 ~ 12.0	120	34 ~ 59	0 ~ 5	32	HDP-12		
3750 ※ 0160000		**-135**	2.5 ~ 12.0	135	34 ~ 59	0 ~ 5	32	HDP-12		
3750 ※ 0170000		**-150**	2.5 ~ 12.0	150	34 ~ 59	0 ~ 5	32	HDP-12		
3750 ※ 0180000		**-165**	2.5 ~ 12.0	165	34 ~ 59	0 ~ 5	32	HDP-12		
3750 ※ 0190000	**NBT-AHO30 or WBT-AHO30**	**-SDM16 -105**	3.5 ~ 16.0	105	40 ~ 50	0 ~ 6	36	HDP-16	FDC-16	S-4L
3750 ※ 0200000		**-120**	3.5 ~ 16.0	120	40 ~ 65	0 ~ 6	36	HDP-16		
3750 ※ 0210000		**-135**	3.5 ~ 16.0	135	40 ~ 65	0 ~ 6	36	HDP-16		
3750 ※ 0220000		**-150**	3.5 ~ 16.0	150	40 ~ 65	0 ~ 6	36	HDP-16		
3750 ※ 0230000		**-165**	3.5 ~ 16.0	165	40 ~ 65	0 ~ 6	36	HDP-16		
3750 ※ 0240000	**NBT-AHO30 or WBT-AHO30**	**-SDM22 -105**	3.5 ~ 22.0	105	48 ~ 58	0 ~ 8	46	HDP-22	FDC-22	S-5L
3750 ※ 0250000		**-120**	3.5 ~ 22.0	120	48 ~ 73	0 ~ 8	46	HDP-22		
3750 ※ 0260000		**-135**	3.5 ~ 22.0	135	48 ~ 73	0 ~ 8	46	HDP-22		
3750 ※ 0270000		**-150**	3.5 ~ 22.0	150	48 ~ 73	0 ~ 8	46	HDP-22		
3750 ※ 0280000		**-165**	3.5 ~ 22.0	165	48 ~ 73	0 ~ 8	46	HDP-22		
3750 ※ 0290000	**NBT-AHO40 or WBT-AHO40**	**-SDM07 -90**	0.5 ~ 7.0	90	29 ~ 39	0 ~ 4	23	HDP-07A	FDC-07	S-0
3750 ※ 0300000		**-105**	0.5 ~ 7.0	105	29 ~ 54	0 ~ 4	23	HDP-07A		
3750 ※ 0310000		**-120**	0.5 ~ 7.0	120	29 ~ 54	0 ~ 4	23	HDP-07A		
3750 ※ 0320000		**-135**	0.5 ~ 7.0	135	29 ~ 54	0 ~ 4	23	HDP-07A		
3750 ※ 0330000		**-150**	0.5 ~ 7.0	150	29 ~ 54	0 ~ 4	23	HDP-07A		
3750 ※ 0340000	**NBT-AHO40 or WBT-AHO40**	**-SDM09 -90**	2.5 ~ 9.0	90	28 ~ 38	0 ~ 4	26	HDP-09	FDC-09	S-1L
3750 ※ 0350000		**-105**	2.5 ~ 9.0	105	28 ~ 53	0 ~ 4	26	HDP-09		
3750 ※ 0360000		**-120**	2.5 ~ 9.0	120	28 ~ 53	0 ~ 4	26	HDP-09		
3750 ※ 0370000		**-135**	2.5 ~ 9.0	135	28 ~ 53	0 ~ 4	26	HDP-09		
3750 ※ 0380000		**-150**	2.5 ~ 9.0	150	28 ~ 53	0 ~ 4	26	HDP-09		
3750 ※ 0390000		**-180**	2.5 ~ 9.0	180	28 ~ 53	0 ~ 4	26	HDP-09		

Inch to Metric (mm) → Inch × 25.4
Metric (mm) to Inch → Metric ÷ 25.4 or Metric × 0.03937

Special / Custom Sizes on request

Unit : Metric

Code	Model		d	L	ℓ	B	D1	Nut	Collet	Spanner
3750 ※ 0400000	**NBT-AHO40 or WBT-AHO40**	**-SDM12 -90**	2.5 ~ 12.0	90	34 ~ 44	0 ~ 5	32	HDP-12	FDC-12	S-3L
3750 ※ 0410000		**-105**	2.5 ~ 12.0	105	34 ~ 59	0 ~ 5	32	HDP-12		
3750 ※ 0420000		**-120**	2.5 ~ 12.0	120	34 ~ 59	0 ~ 5	32	HDP-12		
3750 ※ 0430000		**-135**	2.5 ~ 12.0	135	34 ~ 59	0 ~ 5	32	HDP-12		
3750 ※ 0440000		**-150**	2.5 ~ 12.0	150	34 ~ 59	0 ~ 5	32	HDP-12		
3750 ※ 0450000		**-180**	2.5 ~ 12.0	180	34 ~ 59	0 ~ 5	32	HDP-12		
3750 ※ 0460000	**NBT-AHO40 or WBT-AHO40**	**-SDM16 -105**	3.5 ~ 16.0	105	40 ~ 50	0 ~ 6	36	HDP-16	FDC-16	S-4L
3750 ※ 0470000		**-120**	3.5 ~ 16.0	120	40 ~ 65	0 ~ 6	36	HDP-16		
3750 ※ 0480000		**-135**	3.5 ~ 16.0	135	40 ~ 65	0 ~ 6	36	HDP-16		
3750 ※ 0490000		**-150**	3.5 ~ 16.0	150	40 ~ 65	0 ~ 6	36	HDP-16		
3750 ※ 0500000		**-180**	3.5 ~ 16.0	180	40 ~ 65	0 ~ 6	36	HDP-16		
3750 ※ 0510000	**NBT-AHO40 or WBT-AHO40**	**-SDM22 -120**	3.5 ~ 22.0	120	48 ~ 58	0 ~ 8	46	HDP-22	FDC-22	S-5L
3750 ※ 0520000		**-135**	3.5 ~ 22.0	135	48 ~ 73	0 ~ 8	46	HDP-22		
3750 ※ 0530000		**-150**	3.5 ~ 22.0	150	48 ~ 73	0 ~ 8	46	HDP-22		
3750 ※ 0540000		**-180**	3.5 ~ 22.0	180	48 ~ 73	0 ~ 8	46	HDP-22		
3750 ※ 0550000	**NBT-AHO50 or WBT-AHO50**	**-SDM07 -90**	0.5 ~ 7.0	90	29 ~ 39	0 ~ 4	23	HDP-07A	FDC-07	S-0
3750 ※ 0560000		**-105**	0.5 ~ 7.0	105	29 ~ 54	0 ~ 4	23	HDP-07A		
3750 ※ 0570000		**-120**	0.5 ~ 7.0	120	29 ~ 54	0 ~ 4	23	HDP-07A		
3750 ※ 0580000		**-135**	0.5 ~ 7.0	135	29 ~ 54	0 ~ 4	23	HDP-07A		
3750 ※ 0590000		**-150**	0.5 ~ 7.0	150	29 ~ 54	0 ~ 4	23	HDP-07A		
3750 ※ 0600000		**-165**	0.5 ~ 7.0	165	29 ~ 54	0 ~ 4	23	HDP-07A		
3750 ※ 0610000	**NBT-AHO50 or WBT-AHO50**	**-SDM09 -90**	2.5 ~ 9.0	90	28 ~ 38	0 ~ 4	26	HDP-09	FDC-09	S-1L
3750 ※ 0620000		**-105**	2.5 ~ 9.0	105	28 ~ 53	0 ~ 4	26	HDP-09		
3750 ※ 0630000		**-120**	2.5 ~ 9.0	120	28 ~ 53	0 ~ 4	26	HDP-09		
3750 ※ 0640000		**-135**	2.5 ~ 9.0	135	28 ~ 53	0 ~ 4	26	HDP-09		
3750 ※ 0650000		**-150**	2.5 ~ 9.0	150	28 ~ 53	0 ~ 4	26	HDP-09		
3750 ※ 0660000		**-180**	2.5 ~ 9.0	180	28 ~ 53	0 ~ 4	26	HDP-09		
3750 ※ 0670000	**NBT-AHO50 or WBT-AHO50**	**-SDM12 -105**	2.5 ~ 12.0	105	34 ~ 44	0 ~ 5	32	HDP-12	FDC-12	S-3L
3750 ※ 0680000		**-120**	2.5 ~ 12.0	120	34 ~ 59	0 ~ 5	32	HDP-12		
3750 ※ 0690000		**-135**	2.5 ~ 12.0	135	34 ~ 59	0 ~ 5	32	HDP-12		
3750 ※ 0700000		**-150**	2.5 ~ 12.0	150	34 ~ 59	0 ~ 5	32	HDP-12		
3750 ※ 0710000		**-180**	2.5 ~ 12.0	180	34 ~ 59	0 ~ 5	32	HDP-12		
3750 ※ 0720000	**NBT-AHO50 or WBT-AHO50**	**-SDM16 -105**	3.5 ~ 16.0	105	40 ~ 50	0 ~ 6	36	HDP-16	FDC-16	S-4L
3750 ※ 0730000		**-120**	3.5 ~ 16.0	120	40 ~ 65	0 ~ 6	36	HDP-16		
3750 ※ 0740000		**-135**	3.5 ~ 16.0	135	40 ~ 65	0 ~ 6	36	HDP-16		
3750 ※ 0750000		**-150**	3.5 ~ 16.0	150	40 ~ 65	0 ~ 6	36	HDP-16		
3750 ※ 0760000		**-180**	3.5 ~ 16.0	180	40 ~ 65	0 ~ 6	36	HDP-16		
3750 ※ 0770000	**NBT-AHO50 or WBT-AHO50**	**-SDM22 -120**	3.5 ~ 22.0	120	48 ~ 58	0 ~ 8	46	HDP-22	FDC-22	S-5L
3750 ※ 0780000		**-135**	3.5 ~ 22.0	135	48 ~ 73	0 ~ 8	46	HDP-22		
3750 ※ 0790000		**-150**	3.5 ~ 22.0	150	48 ~ 73	0 ~ 8	46	HDP-22		
3750 ※ 0800000		**-180**	3.5 ~ 22.0	180	48 ~ 73	0 ~ 8	46	HDP-22		
3750 ※ 0810000		**-210**	3.5 ~ 22.0	210	48 ~ 73	0 ~ 8	46	HDP-22		

Please replace ※ in the code with 0 for NBT-AHO and 6 for WBT-AHO.

1.Collet and spanner are sold separately.
2. ℓ is the dimension between the cap end and the preset screw top end.
3.See P.499 for standard Tightening Torque.

Collet
P. 086 - 089



Spanner
P. 095



Ordering Example

Corresponding to our two-face contact BT spindle

NBT-AHO40 - SDM 12 - 90

Shank size | Max. collet I.D. | Projection length (L)

Ordering Example

Corresponding to BT two-face contact spindle

WBT-AHO40 - SDM 12 - 90

Shank size | Max. collet I.D. | Projection length (L)

HDZ

"R"Zero Holder

※ AHO Retention Stud is required.

● Runout accuracy of the cutting edge can be adjusted as closely as to zero.

Type1

Preset Screw (Included)

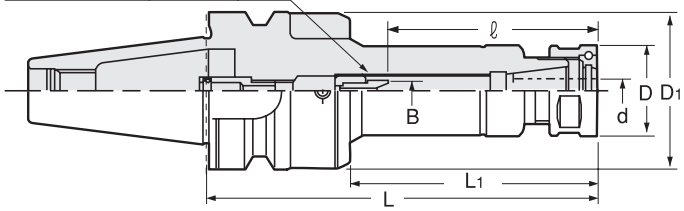

Type2

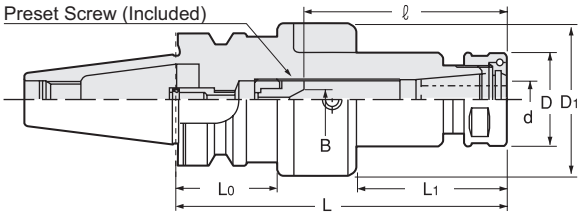

⚠ • Our two-face contact NBT spindle is incompatible with BT two-face contact spindle (for WBT-AHO). Please refer to P. 34.
• When AHO is used with center through coolant feeding, a designated retention stud (with coolant pipe) for AHO must be used.

Unit : Metric

Code	Model	Type	d	L	L1	ℓ	B	D1	D	L0	Nut	kg	Collet	Spanner
3840 ※ 0640000	NBT-AHO30 or WBT-AHO30 -HDZ07 -60	1	0.5 ~ 7.0	60	22	22 ~ 23	0 ~ 4	41	23	–	HDP-07A		FDC-07	S-0
3840 ※ 0650000	-75	1	0.5 ~ 7.0	75	37	22 ~ 38	0 ~ 4	41	23	–	HDP-07A			
3840 ※ 0660000	-90	1	0.5 ~ 7.0	90	52	22 ~ 45	0 ~ 4	41	23	–	HDP-07A			
3840 ※ 0670000	-105	1	0.5 ~ 7.0	105	67	22 ~ 45	0 ~ 4	41	23	–	HDP-07A			
3840 ※ 0680000	NBT-AHO30 or WBT-AHO30 -HDZ09 -75	1	2.5 ~ 9.0	75	37	27 ~ 40	0 ~ 4	45	26	–	HDP-09		FDC-09	S-1L
3840 ※ 0690000	-90	1	2.5 ~ 9.0	90	52	27 ~ 50	0 ~ 4	45	26	–	HDP-09			
3840 ※ 0700000	-105	1	2.5 ~ 9.0	105	67	27 ~ 57	0 ~ 4	45	26	–	HDP-09			
3840 ※ 0760000	-120	1	2.5 ~ 9.0	120	82	27 ~ 57	0 ~ 4	45	26	–	HDP-09			
3840 ※ 0710000	NBT-AHO30 or WBT-AHO30 -HDZ12 -90	2	2.5 ~ 12.0	90	33	33 ~ 55	0 ~ 5	52	32	32	HDP-12		FDC-12	S-3L
3840 ※ 0720000	-105	2	2.5 ~ 12.0	105	48	33 ~ 65	0 ~ 5	52	32	32	HDP-12			
3840 ※ 0770000	-120	2	2.5 ~ 12.0	120	63	33 ~ 69	0 ~ 5	52	32	32	HDP-12			
3840 ※ 0730000	NBT-AHO30 or WBT-AHO30 -HDZ16 -90	2	3.5 ~ 16.0	90	33	38 ~ 50	0 ~ 6	56	36	32	HDP-16		FDC-16	S-4L
3840 ※ 0740000	-105	2	3.5 ~ 16.0	105	48	38 ~ 65	0 ~ 6	56	36	32	HDP-16			
3840 ※ 0750000	-120	2	3.5 ~ 16.0	120	63	38 ~ 80	0 ~ 6	56	36	32	HDP-16			
3840 ※ 0010000	NBT-AHO40 or WBT-AHO40 -HDZ07 -75	1	0.5 ~ 7.0	75	32	22 ~ 38	0 ~ 4	41	23	–	HDP-07A		FDC-07	S-0
3840 ※ 0020000	-90	1	0.5 ~ 7.0	90	47	22 ~ 45	0 ~ 4	41	23	–	HDP-07A			
3840 ※ 0030000	-105	1	0.5 ~ 7.0	105	62	22 ~ 45	0 ~ 4	41	23	–	HDP-07A			
3840 ※ 0780000	-120	1	0.5 ~ 7.0	120	77	22 ~ 45	0 ~ 4	41	23	–	HDP-07A			
3840 ※ 0790000	-135	1	0.5 ~ 7.0	135	92	22 ~ 45	0 ~ 4	41	23	–	HDP-07A			
3840 ※ 0040000	NBT-AHO40 or WBT-AHO40 -HDZ09 -90	1	2.5 ~ 9.0	90	47	27 ~ 55	0 ~ 4	45	26	–	HDP-09		FDC-09	S-1L
3840 ※ 0050000	-105	1	2.5 ~ 9.0	105	62	27 ~ 57	0 ~ 4	45	26	–	HDP-09			
3840 ※ 0060000	-120	1	2.5 ~ 9.0	120	77	27 ~ 57	0 ~ 4	45	26	–	HDP-09			
3840 ※ 0070000	-135	1	2.5 ~ 9.0	135	92	27 ~ 57	0 ~ 4	45	26	–	HDP-09			
3840 ※ 0080000	-165	1	2.5 ~ 9.0	165	122	27 ~ 57	0 ~ 4	45	26	–	HDP-09			
3840 ※ 0090000	NBT-AHO40 or WBT-AHO40 -HDZ12 -90	1	2.5 ~ 12.0	90	43	33 ~ 55	0 ~ 5	56	32	–	HDP-12		FDC-12	S-3L
3840 ※ 0100000	-105	1	2.5 ~ 12.0	105	58	33 ~ 69	0 ~ 5	56	32	–	HDP-12			
3840 ※ 0110000	-120	1	2.5 ~ 12.0	120	73	33 ~ 69	0 ~ 5	56	32	–	HDP-12			
3840 ※ 0120000	-135	1	2.5 ~ 12.0	135	88	33 ~ 69	0 ~ 5	56	32	–	HDP-12			
3840 ※ 0130000	-165	1	2.5 ~ 12.0	165	118	33 ~ 69	0 ~ 5	56	32	–	HDP-12			
3840 ※ 0140000	-195	1	2.5 ~ 12.0	195	148	33 ~ 69	0 ~ 5	56	32	–	HDP-12			
3840 ※ 0150000	NBT-AHO40 or WBT-AHO40 -HDZ16 -90	1	3.5 ~ 16.0	90	43	38 ~ 55	0 ~ 6	62	36	–	HDP-16	1.4	FDC-16	S-4L
3840 ※ 0160000	-105	1	3.5 ~ 16.0	105	58	38 ~ 70	0 ~ 6	62	36	–	HDP-16			
3840 ※ 0170000	-120	1	3.5 ~ 16.0	120	73	38 ~ 82	0 ~ 6	62	36	–	HDP-16			
3840 ※ 0180000	-135	1	3.5 ~ 16.0	135	88	38 ~ 82	0 ~ 6	62	36	–	HDP-16			
3840 ※ 0190000	-165	1	3.5 ~ 16.0	165	118	38 ~ 82	0 ~ 6	62	36	–	HDP-16			
3840 ※ 0200000	-195	1	3.5 ~ 16.0	195	148	38 ~ 82	0 ~ 6	62	36	–	HDP-16			

Inch to Metric (mm) → Inch × 25.4
Metric (mm) to Inch → Metric ÷ 25.4 or Metric × 0.03937

Special / Custom Sizes on request

Unit : Metric

Code	Model	Type	d	L	L1	ℓ	B	D1	D	L0	Nut	kg	Collet	Spanner
3840 ※ 0210000	NBT-AHO40 or WBT-AHO40 -HDZ22 -105	2	3.5 ~ 22.0	105	31	47 ~ 65	0 ~ 8	69	46	45	HDP-22		FDC-22	S-5L
3840 ※ 0220000	-120	2	3.5 ~ 22.0	120	46	47 ~ 80	0 ~ 8	69	46	45	HDP-22			
3840 ※ 0230000	-135	2	3.5 ~ 22.0	135	61	47 ~ 95	0 ~ 8	69	46	45	HDP-22	2.3		
3840 ※ 0240000	-165	2	3.5 ~ 22.0	165	91	47 ~ 103	0 ~ 8	69	46	45	HDP-22			
3840 ※ 0250000	-195	2	3.5 ~ 22.0	195	121	47 ~ 103	0 ~ 8	69	46	45	HDP-22			
3840 ※ 0260000	NBT-AHO50 or WBT-AHO50 -HDZ07 -90	1	0.5 ~ 7.0	90	36	22 ~ 45	0 ~ 4	41	23	—	HDP-07A		FDC-07	S-0
3840 ※ 0270000	-105	1	0.5 ~ 7.0	105	51	22 ~ 45	0 ~ 4	41	23	—	HDP-07A			
3840 ※ 0280000	-120	1	0.5 ~ 7.0	120	66	22 ~ 45	0 ~ 4	41	23	—	HDP-07A			
3840 ※ 0290000	-135	1	0.5 ~ 7.0	135	81	22 ~ 45	0 ~ 4	41	23	—	HDP-07A			
3840 ※ 0300000	-165	1	0.5 ~ 7.0	165	111	22 ~ 45	0 ~ 4	41	23	—	HDP-07A			
3840 ※ 0310000	-195	1	0.5 ~ 7.0	195	141	22 ~ 45	0 ~ 4	41	23	—	HDP-07A			
3840 ※ 0320000	NBT-AHO50 or WBT-AHO50 -HDZ09 -90	1	2.5 ~ 9.0	90	36	27 ~ 50	0 ~ 4	45	26	—	HDP-09		FDC-09	S-1L
3840 ※ 0330000	-105	1	2.5 ~ 9.0	105	51	27 ~ 57	0 ~ 4	45	26	—	HDP-09			
3840 ※ 0340000	-120	1	2.5 ~ 9.0	120	66	27 ~ 57	0 ~ 4	45	26	—	HDP-09			
3840 ※ 0350000	-135	1	2.5 ~ 9.0	135	81	27 ~ 57	0 ~ 4	45	26	—	HDP-09			
3840 ※ 0360000	-165	1	2.5 ~ 9.0	165	111	27 ~ 57	0 ~ 4	45	26	—	HDP-09			
3840 ※ 0370000	-195	1	2.5 ~ 9.0	195	141	27 ~ 57	0 ~ 4	45	26	—	HDP-09			
3840 ※ 0380000	-225	1	2.5 ~ 9.0	225	171	27 ~ 57	0 ~ 4	45	26	—	HDP-09			
3840 ※ 0390000	-255	1	2.5 ~ 9.0	255	201	27 ~ 57	0 ~ 4	45	26	—	HDP-09			
3840 ※ 0400000	NBT-AHO50 or WBT-AHO50 -HDZ12 -90	1	2.5 ~ 12.0	90	32	33 ~ 50	0 ~ 5	56	32	—	HDP-12		FDC-12	S-3L
3840 ※ 0410000	-105	1	2.5 ~ 12.0	105	47	33 ~ 65	0 ~ 5	56	32	—	HDP-12			
3840 ※ 0420000	-120	1	2.5 ~ 12.0	120	62	33 ~ 69	0 ~ 5	56	32	—	HDP-12			
3840 ※ 0430000	-135	1	2.5 ~ 12.0	135	77	33 ~ 69	0 ~ 5	56	32	—	HDP-12			
3840 ※ 0440000	-165	1	2.5 ~ 12.0	165	107	33 ~ 69	0 ~ 5	56	32	—	HDP-12			
3840 ※ 0450000	-195	1	2.5 ~ 12.0	195	137	33 ~ 69	0 ~ 5	56	32	—	HDP-12			
3840 ※ 0460000	-225	1	2.5 ~ 12.0	225	167	33 ~ 69	0 ~ 5	56	32	—	HDP-12			
3840 ※ 0470000	-255	1	2.5 ~ 12.0	255	197	33 ~ 69	0 ~ 5	56	32	—	HDP-12			
3840 ※ 0480000	NBT-AHO50 or WBT-AHO50 -HDZ16 -90	1	3.5 ~ 16.0	90	32	38 ~ 50	0 ~ 6	62	36	—	HDP-16		FDC-16	S-4L
3840 ※ 0490000	-105	1	3.5 ~ 16.0	105	47	38 ~ 65	0 ~ 6	62	36	—	HDP-16			
3840 ※ 0500000	-120	1	3.5 ~ 16.0	120	62	38 ~ 82	0 ~ 6	62	36	—	HDP-16			
3840 ※ 0510000	-135	1	3.5 ~ 16.0	135	77	38 ~ 82	0 ~ 6	62	36	—	HDP-16			
3840 ※ 0520000	-165	1	3.5 ~ 16.0	165	107	38 ~ 82	0 ~ 6	62	36	—	HDP-16			
3840 ※ 0530000	-195	1	3.5 ~ 16.0	195	137	38 ~ 82	0 ~ 6	62	36	—	HDP-16			
3840 ※ 0540000	-225	1	3.5 ~ 16.0	225	167	38 ~ 82	0 ~ 6	62	36	—	HDP-16			
3840 ※ 0550000	-255	1	3.5 ~ 16.0	255	197	38 ~ 82	0 ~ 6	62	36	—	HDP-16			
3840 ※ 0560000	NBT-AHO50 or WBT-AHO50 -HDZ22 -105	1	3.5 ~ 22.0	105	43	47 ~ 67	0 ~ 8	76	46	—	HDP-22		FDC-22	S-5L
3840 ※ 0570000	-120	1	3.5 ~ 22.0	120	58	47 ~ 82	0 ~ 8	76	46	—	HDP-22			
3840 ※ 0580000	-135	1	3.5 ~ 22.0	135	73	47 ~ 97	0 ~ 8	76	46	—	HDP-22			
3840 ※ 0590000	-150	1	3.5 ~ 22.0	150	88	47 ~ 103	0 ~ 8	76	46	—	HDP-22			
3840 ※ 0600000	-165	1	3.5 ~ 22.0	165	103	47 ~ 103	0 ~ 8	76	46	—	HDP-22	4.4		
3840 ※ 0610000	-195	1	3.5 ~ 22.0	195	133	47 ~ 103	0 ~ 8	76	46	—	HDP-22			
3840 ※ 0620000	-225	1	3.5 ~ 22.0	225	163	47 ~ 103	0 ~ 8	76	46	—	HDP-22			
3840 ※ 0630000	-255	1	3.5 ~ 22.0	255	193	47 ~ 103	0 ~ 8	76	46	—	HDP-22			

Please replace ※ in the code with 0 for NBT-AHO and 6 for WBT-AHO.

1.Collet, spanner, hexagon head preset screw, preset screw for semi-dry processing, and adjustment wrench are sold separately. Standard preset screw is included.
2.Refer to P.092 for minimum tool insertion length in case of using our coolant collets (OH,C or MS).
3. ℓ indicates dimension when using with a preset screw.
4.See P.499 for standard Tightening Torque.

Ordering Example

Corresponding to our two-face contact BT spindle

NBT-AHO40 - HDZ 12 - 90

NBT-AHO40: Shank size; 12: Max. collet I.D.; 90: Projection length (L)

Ordering Example

Corresponding to BT two-face contact spindle

WBT-AHO40 - HDZ 12 - 90

WBT-AHO40: Shank size; 12: Max. collet I.D.; 90: Projection length (L)

Collet	Spanner	Preset screw	Adjustment wrench
P. 086 - 089	P. 095	P. 094	P. 095




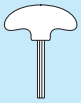

Inch to Metric (mm) → Inch × 25.4
Metric (mm) to Inch → Metric ÷ 25.4 or Metric × 0.03937

Special / Custom Sizes on request

CTZ

"R"Zero Holder for Large Diameter

※ AHO Retention Stud is required.

● Runout of the cutting edge can be adjusted as close as to zero. Suitable for large diameter reaming.

Type1

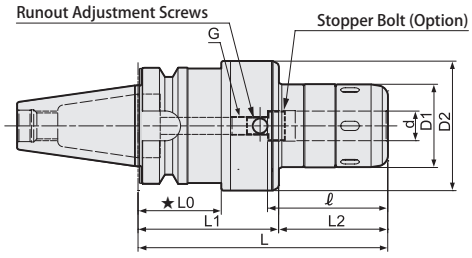

Type2

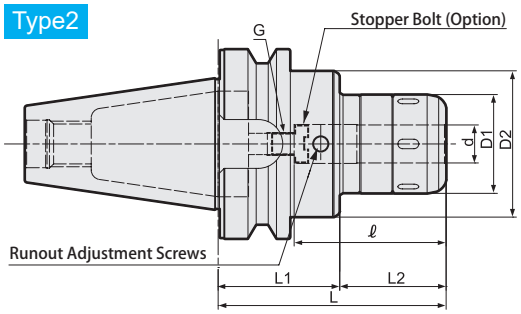



⚠ Caution

★ :Take caution against A.T.C. arm and tool magazine interference.

Caution

Please rotate the clamping ring counterclockwise more than 360 degrees after a cutting tool is removed.

- Our two-face contact NBT spindle is incompatible with BT two-face contact spindle (for WBT-AHO). Please refer to P. 41.
- When AHO is used with center through coolant feeding, a designated retention stud (with coolant pipe) for AHO must be used.

Metric Sizes

Unit : Metric

Code	Model	Type	d	L	L1	L2	D1	D2	L0	ℓ	G P=1.0	Stopper Bolt	Spanner	Wrench
3730※1030000	NBT-AHO40 or WBT-AHO40 -CTZ25A -125	1	25	125	64	61	61	74	★38	80	12	BL20-※※	HS-2.5-25	L-6L (Included)
3730※1040000	-150	1	25	150	74	76	61	74	48	80	12			
3730※1050000	NBT-AHO40 or WBT-AHO40 -CTZ32A -125＊1	1	32	125	64	61	68	80	★35	95	18	unusable	HS-3-32	
3730※1060000	-150	1	32	150	74	76	68	80	45	120	18			
3730※1090000	NBT-AHO50 or WBT-AHO50 -CTZ25A -125	2	25	125	64	61	61	74	-	80	12	BL20-※※	HS-2.5-25	
3730※1100000	-165	2	25	165	64	101	61	74	-	80	12			
3730※1110000	NBT-AHO50 or WBT-AHO50 -CTZ32A -125＊2	2	32	125	64	61	68	80	-	105	-	unusable	HS-3-32	
3730※1120000	-165	2	32	165	64	101	68	80	-	120	18	BL32-※※		
3730※0130000	NBT-AHO50 or WBT-AHO50 -CTZ42 -125＊3	2	42	125	64	61	88	99	-	105	-	unusable	HS-4-42	
3730※0140000	-165＊4	2	42	165	64	101	88	99	-	120	18	BL32-※※		

Please replace ※ in the code with 1 for NBT-AHO and 6 for WBT-AHO.

1. When ordering, indicate number of spanners required. "No charge" spanners are limited to number of holders on order.
2. A wrench is included.
3. The model with "＊1-＊4" is not compatible with some accessories. For more information about the accessories, please refer below chart.

Accessories

Models with ＊1 - ＊3 cannot be used with some accessories due to short ℓ length.

	Stopper Bolt BL (P.068)	Straight Collet MC (P.066)	Straight Collet MCA (P.067)	Morse Taper Adapter MA (P.068)	Morse Taper Adapter MAB (P.068)	Jacobs Adapter JA (P.069)	Jacobs Adapter JAB (P.069)
＊1	No	Yes	No	No	Yes	No	Yes
＊2	No	Yes	No	Yes	Yes	Yes	Yes
＊3	No	Yes	No	No	No	No	No
＊4	Yes	Yes	No	Yes	Yes	Yes	Yes

Spanner

P. 069



Ordering Example

Corresponding to our two-face contact BT spindle

NBT-AHO40 - CTZ 32 A - 125

Shank size / I.D. (d) / Projection length (L)

Ordering Example

Corresponding to BT two-face contact spindle

WBT-AHO40 - CTZ 32 A - 125

Shank size / I.D. (d) / Projection length (L)

Min. chucking length

Direct Chucking (without MC Collet)

I.D.of Chuck	Min. chucking length
25,32,42	50

With MC Collet

Collet I.D.	Min. chucking length MC	Min. chucking length MC-C、MC-OH
6,8	30	30
10,12	40	40
16,20	45	45
25	50	50
32	50	60

Inch to Metric (mm) → Inch × 25.4
Metric (mm) to Inch → Metric ÷ 25.4 or Metric × 0.03937

Special / Custom Sizes on request

MEMO

PHC-A

Power Hydro Chuck

※ AHO Retention Stud is required.

● Hydro chuck with collet holder flexibility. Suitable for high precision cutting.

Type1

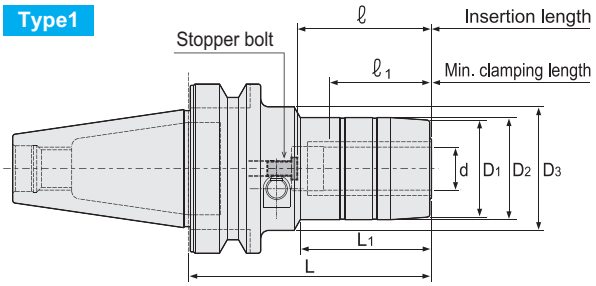

Type2

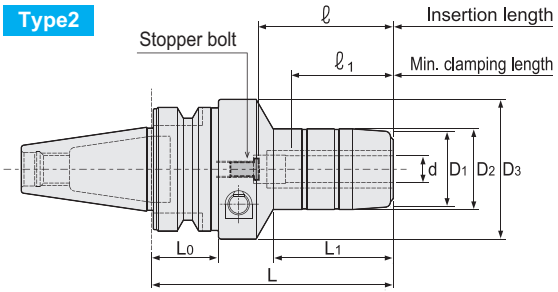

Type3

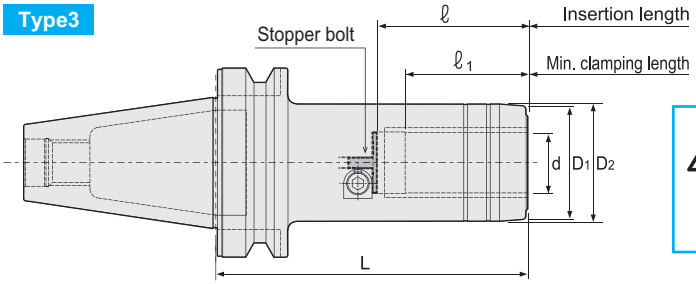

- Our two-face contact NBT spindle is incompatible with BT two-face contact spindle (for WBT-AHO). Please refer to P. 41.
- When AHO is used with center through coolant feeding, a designated retention stud (with coolant pipe) for AHO must be used.

Metric Sizes

Unit : Metric

Code	Model	Type	d	L	L1	D1	D2	D3	L0	ℓ	ℓ1	Kg	Wrench (Option)
3970 ※ 0010100	**NBT-AHO30 or WBT-AHO30 -PHC06A-75**	1	6	75	30	24	26	46	—	34	29	0.7	
3970 ※ 0020100	**NBT-AHO30 or WBT-AHO30 -PHC07A-75**	1	7	75	30	26	28	46	—	34	29		
3970 ※ 0030100	**NBT-AHO30 or WBT-AHO30 -PHC08A-75**	1	8	75	30	26	28	46	—	34	29	0.7	
3970 ※ 0040100	**NBT-AHO30 or WBT-AHO30 -PHC09A-105**	2	9	105	44	28	30	52	40	50	40		
3970 ※ 0050100	**NBT-AHO30 or WBT-AHO30 -PHC10A-105**	2	10	105	44	28	30	52	40	50	40	1.0	
3970 ※ 0060100	**NBT-AHO30 or WBT-AHO30 -PHC11A-105**	2	11	105	45	30	32	52	40	50	40		
3970 ※ 0070100	**NBT-AHO30 or WBT-AHO30 -PHC12A-105**	2	12	105	45	30	32	52	40	50	40	1.1	L-4T (4mm)
3970 ※ 0080100	**NBT-AHO30 or WBT-AHO30 -PHC13A-105**	2	13	105	46	34	36	52	40	50	40		
3970 ※ 0090100	**NBT-AHO30 or WBT-AHO30 -PHC14A-105**	2	14	105	46	34	36	52	40	50	40		
3970 ※ 0100100	**NBT-AHO30 or WBT-AHO30 -PHC15A-105**	2	15	105	46	36	38	52	40	50	40		
3970 ※ 0110100	**NBT-AHO30 or WBT-AHO30 -PHC16A-105**	2	16	105	46	36	38	52	40	50	40	1.1	
3970 ※ 0120100	**NBT-AHO30 or WBT-AHO30 -PHC20A-90**	1	20	90	49	40	42	46	—	50	40	0.9	
3970 ※ 0130100	**-120**	1	20	120	69	40	42	46	—	70	40	1.2	
3970 ※ 0140100	**NBT-AHO40 or WBT-AHO40 -PHC06A-75**	1	6	75	30	24	26	46	—	34	29	1.1	
3970 ※ 0150100	**-105**	1	6	105	41	24	26	46	—	45	29	1.4	
3970 ※ 0160100	**NBT-AHO40 or WBT-AHO40 -PHC07A-75**	1	7	75	30	26	28	46	—	34	29	1.1	
3970 ※ 0170100	**-105**	1	7	105	41	26	28	46	—	45	29		
3970 ※ 0180100	**NBT-AHO40 or WBT-AHO40 -PHC08A-75**	1	8	75	30	26	28	46	—	34	29	1.1	
3970 ※ 0190100	**-105**	1	8	105	41	26	28	46	—	45	29	1.4	
3970 ※ 0200100	**NBT-AHO40 or WBT-AHO40 -PHC09A-90**	1	9	90	44	28	30	52	—	50	40		
3970 ※ 0210100	**-120**	1	9	120	64	28	30	52	—	70	40		
3970 ※ 0220100	**NBT-AHO40 or WBT-AHO40 -PHC10A-90**	1	10	90	44	28	30	52	—	50	40	1.2	
3970 ※ 0230100	**-120**	1	10	120	64	28	30	52	—	70	40	1.5	
3970 ※ 0240100	**NBT-AHO40 or WBT-AHO40 -PHC11A-90**	1	11	90	45	30	32	52	—	50	40		
3970 ※ 0250100	**-120**	1	11	120	65	30	32	52	—	70	40		
3970 ※ 0260100	**NBT-AHO40 or WBT-AHO40 -PHC12A-90**	1	12	90	45	30	32	52	—	50	40	1.3	L-4T (4mm)
3970 ※ 0270100	**-120**	1	12	120	65	30	32	52	—	70	40	1.5	
3970 ※ 0280100	**NBT-AHO40 or WBT-AHO40 -PHC13A-90**	1	13	90	46	34	36	52	—	50	40		
3970 ※ 0290100	**-120**	1	13	120	66	34	36	52	—	70	40		
3970 ※ 0300100	**NBT-AHO40 or WBT-AHO40 -PHC14A-90**	1	14	90	46	34	36	52	—	50	40		
3970 ※ 0310100	**-120**	1	14	120	66	34	36	52	—	70	40		
3970 ※ 0320100	**NBT-AHO40 or WBT-AHO40 -PHC15A-90**	1	15	90	46	36	38	52	—	50	40		
3970 ※ 0330100	**-120**	1	15	120	66	36	38	52	—	70	40		
3970 ※ 0340100	**NBT-AHO40 or WBT-AHO40 -PHC16A-90**	1	16	90	46	36	38	52	—	50	40		
3970 ※ 0350100	**-120**	1	16	120	66	36	38	52	—	70	40	1.6	
3970 ※ 0360100	**NBT-AHO40 or WBT-AHO40 -PHC20A-90**	1	20	90	49	40	42	46	—	50	40	1.3	
3970 ※ 0370100	**-120**	1	20	120	69	40	42	46	—	70	40	1.6	

Inch to Metric (mm) → Inch × 25.4
Metric (mm) to Inch → Metric ÷ 25.4 or Metric × 0.03937

Special / Custom Sizes on request

Metric Sizes

Unit : Metric

Code	Model	Type	d	L	L1	D1	D2	D3	L0	ℓ	ℓ1	Kg	Wrench (Option)
3970 ※ 0380100	**NBT-AHO40 or WBT-AHO40 -PHC25A-105**	1	25	105	59	50	52	62	—	60	50		L-6T (6mm)
3970 ※ 0390100	**-135**	1	25	135	79	50	52	62	—	80	50	2.4	
3970 ※ 0400100	**NBT-AHO40 or WBT-AHO40 -PHC32A-120**	3	32	120	93	60	62	62	—	75	65	2.4	
3970 ※ 0410100	**-150**	3	32	150	123	60	62	62	—	80	65	3.1	
3970 ※ 0420100	**NBT-AHO50 or WBT-AHO50 -PHC06A-90**	1	6	90	30	24	26	46	—	34	29		L-4T (4mm)
3970 ※ 0430100	**-120**	1	6	120	41	24	26	46	—	45	29		
3970 ※ 0440100	**-150**	1	6	150	41	24	26	46	—	45	29		
3970 ※ 0450100	**NBT-AHO50 or WBT-AHO50 -PHC07A-90**	1	7	90	30	26	28	46	—	34	29		
3970 ※ 0460100	**-120**	1	7	120	41	26	28	46	—	45	29		
3970 ※ 0470100	**-150**	1	7	150	41	26	28	46	—	45	29		
3970 ※ 0480100	**NBT-AHO50 or WBT-AHO50 -PHC08A-90**	1	8	90	30	26	28	46	—	34	29		
3970 ※ 0490100	**-120**	1	8	120	41	26	28	46	—	45	29		
3970 ※ 0500100	**-150**	1	8	150	41	26	28	46	—	45	29		
3970 ※ 0510100	**NBT-AHO50 or WBT-AHO50 -PHC09A-105**	1	9	105	44	28	30	52	—	50	40		
3970 ※ 0520100	**-135**	1	9	135	64	28	30	52	—	70	40		
3970 ※ 0530100	**-165**	1	9	165	64	28	30	52	—	70	40		
3970 ※ 0540100	**NBT-AHO50 or WBT-AHO50 -PHC10A-105**	1	10	105	44	28	30	52	—	50	40		
3970 ※ 0550100	**-135**	1	10	135	64	28	30	52	—	70	40		
3970 ※ 0560100	**-165**	1	10	165	64	28	30	52	—	70	40		
3970 ※ 0570100	**NBT-AHO50 or WBT-AHO50 -PHC11A-105**	1	11	105	45	30	32	52	—	50	40		
3970 ※ 0580100	**-135**	1	11	135	65	30	32	52	—	70	40		
3970 ※ 0590100	**-165**	1	11	165	65	30	32	52	—	70	40		
3970 ※ 0600100	**NBT-AHO50 or WBT-AHO50 -PHC12A-105**	1	12	105	45	30	32	52	—	50	40		
3970 ※ 0610100	**-135**	1	12	135	65	30	32	52	—	70	40		
3970 ※ 0620100	**-165**	1	12	165	65	30	32	52	—	70	40		
3970 ※ 0630100	**NBT-AHO50 or WBT-AHO50 -PHC13A-105**	1	13	105	46	34	36	52	—	50	40		
3970 ※ 0640100	**-135**	1	13	135	66	34	36	52	—	70	40		
3970 ※ 0650100	**-165**	1	13	165	66	34	36	52	—	70	40		
3970 ※ 0660100	**NBT-AHO50 or WBT-AHO50 -PHC14A-105**	1	14	105	46	34	36	52	—	50	40		
3970 ※ 0670100	**-135**	1	14	135	66	34	36	52	—	70	40		
3970 ※ 0680100	**-165**	1	14	165	66	34	36	52	—	70	40		
3970 ※ 0690100	**NBT-AHO50 or WBT-AHO50 -PHC15A-105**	1	15	105	46	36	38	52	—	50	40		
3970 ※ 0700100	**-135**	1	15	135	66	36	38	52	—	70	40		
3970 ※ 0710100	**-165**	1	15	165	66	36	38	52	—	70	40		
3970 ※ 0720100	**NBT-AHO50 or WBT-AHO50 -PHC16A-105**	1	16	105	46	36	38	52	—	50	40		
3970 ※ 0730100	**-135**	1	16	135	66	36	38	52	—	70	40		
3970 ※ 0740100	**-165**	1	16	165	66	36	38	52	—	70	40		
3970 ※ 0750100	**NBT-AHO50 or WBT-AHO50 -PHC20A-105**	1	20	105	49	40	42	46	—	50	40		
3970 ※ 0760100	**-135**	1	20	135	69	40	42	46	—	70	40		
3970 ※ 0770100	**-165**	1	20	165	69	40	42	46	—	70	40		
3970 ※ 0780100	**NBT-AHO50 or WBT-AHO50 -PHC25A-120**	1	25	120	59	50	52	62	—	64	50		L-6T (6mm)
3970 ※ 0790100	**-150**	1	25	150	79	50	52	62	—	80	50		
3970 ※ 0800100	**-165**	1	25	165	79	50	52	62	—	80	50		
3970 ※ 0810100	**NBT-AHO50 or WBT-AHO50 -PHC32A-135**	3	32	135	—	60	62	—	—	75	65		
3970 ※ 0820100	**-165**	3	32	165	—	60	62	—	—	80	65		

Please replace ※ in the code with 0 for NBT-AHO and 6 for WBT-AHO.

1.Please use a cutting tool with a tolerance of less than h7. A tolerance of less than 0/-001 is recommended for new cutting tools.
2.Do not leave the holder with actuating screw tightened when the chuck is empty.
3.PHC12A and PHC20A have pin holes for collet with stopper pin on its body.

Ordering Example

Corresponding to our two-face contact BT spindle

NBT-AHO50 - PHC 12 A - 105

Shank size | I.D. (d) | Projection length (L)

Ordering Example

Corresponding to BT two-face contact spindle

WBT-AHO50 - PHC 12 A - 105

Shank size | I.D. (d) | Projection length (L)

Tightening torque (Torque wrench : p.498)

model	I.D. (d) mm	Tightening torque (Nm)
PHC·A	06 ~ 08	11 ~ 12
PHC·A	09 ~ 20	7 ~ 8
PHC·A	25, 32	29 ~ 30

PHS Collet P.110

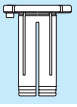

Hex. Wrench P. 095

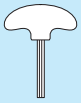

Inch to Metric (mm) → Inch × 25.4
Metric (mm) to Inch → Metric ÷ 25.4 or Metric × 0.03937

Special / Custom Sizes on request

PHC·S New

Slim Hydro Chuck

※ AHO Retention Stud is required.

● Perfect choice for tight space applications, such as endmill finishing, drilling and reaming on 5-axis machines.

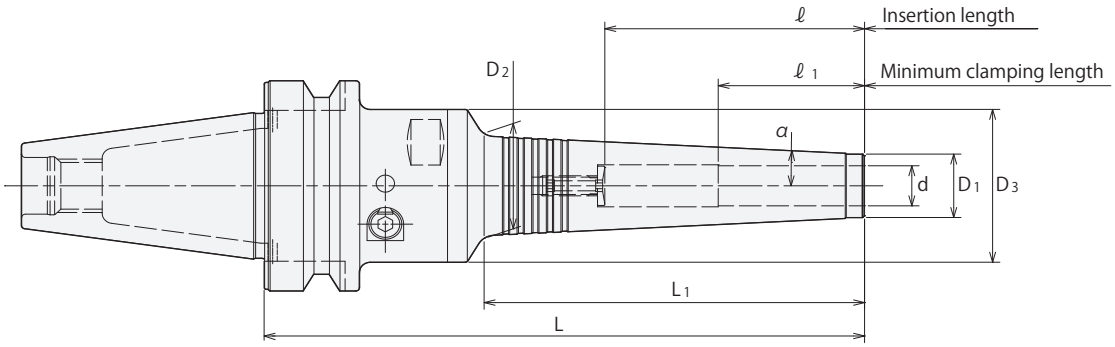

⚠ • Our two-face contact NBT spindle is incompatible with BT two-face contact spindle (for WBT-AHO). Please refer to P. 41.
• When AHO is used with center through coolant feeding, a designated retention stud (with coolant pipe) for AHO must be used.

Metric Sizes

Unit : Metric

Code	Model	d	L	L1	D1	D2	D3	ℓ	ℓ 1	α	Kg	Wrench (Option)
3720 ※ 0010000	NBT-AHO30 or WBT-AHO30 -PHC06S -135	6	135	71	13	20.5	46	37	29	3°	0.9	
3720 ※ 0020000	-150	6	150	87	13	22.2	46	37	29	3°	0.9	
3720 ※ 0030000	-165	6	165	102	13	23.7	46	37	29	3°	1.0	
3720 ※ 0040000	-180	6	180	118	13	25.4	46	37	29	3°	1.0	
3720 ※ 0050000	NBT-AHO30 or WBT-AHO30 -PHC07S -135	7	135	71	14	21.5	46	37	29	3°	0.9	
3720 ※ 0060000	-150	7	150	87	14	23.2	46	37	29	3°	1.0	
3720 ※ 0070000	-165	7	165	102	14	24.7	46	37	29	3°	1.0	
3720 ※ 0080000	-180	7	180	118	14	26.4	46	37	29	3°	1.1	
3720 ※ 0090000	NBT-AHO30 or WBT-AHO30 -PHC08S -135	8	135	72	15	22.6	46	50	29	3°	0.9	
3720 ※ 0100000	-150	8	150	87	15	24.2	46	50	29	3°	1.0	
3720 ※ 0110000	-165	8	165	103	15	25.8	46	50	29	3°	1.0	
3720 ※ 0120000	-180	8	180	118	15	27.4	46	50	29	3°	1.1	
3720 ※ 0130000	NBT-AHO30 or WBT-AHO30 -PHC09S -135	9	135	72	16	23.6	46	50	40	3°	0.9	
3720 ※ 0140000	-150	9	150	87	16	25.2	46	50	40	3°	1.0	
3720 ※ 0150000	-165	9	165	103	16	26.8	46	50	40	3°	1.0	L-4T
3720 ※ 0160000	-180	9	180	118	16	28.4	46	50	40	3°	1.1	
3720 ※ 0170000	NBT-AHO30 or WBT-AHO30 -PHC10S -135	10	135	72	17	24.6	46	50	40	3°	0.9	
3720 ※ 0180000	-150	10	150	88	17	26.3	46	50	40	3°	1.0	
3720 ※ 0190000	-165	10	165	103	17	27.8	46	50	40	3°	1.1	
3720 ※ 0200000	-180	10	180	119	17	29.5	46	50	40	3°	1.1	
3720 ※ 0210000	NBT-AHO30 or WBT-AHO30 -PHC11S -135	11	135	73	18	25.7	46	50	40	3°	1.0	
3720 ※ 0220000	-150	11	150	88	18	27.3	46	50	40	3°	1.0	
3720 ※ 0230000	-165	11	165	104	18	29.0	46	50	40	3°	1.1	
3720 ※ 0240000	-180	11	180	119	18	30.5	46	50	40	3°	1.2	
3720 ※ 0250000	NBT-AHO30 or WBT-AHO30 -PHC12S -135	12	135	73	19	26.7	46	70	40	3°	1.0	
3720 ※ 0260000	-150	12	150	88	19	28.3	46	70	40	3°	1.0	
3720 ※ 0270000	-165	12	165	104	19	30.0	46	70	40	3°	1.1	
3720 ※ 0280000	-180	12	180	119	19	31.5	46	70	40	3°	1.2	
3720 ※ 0290000	NBT-AHO40 or WBT-AHO40 -PHC06S -135	6	135	71	13	20.5	46	37	29	3°	1.3	
3720 ※ 0300000	-150	6	150	87	13	22.2	46	37	29	3°	1.4	
3720 ※ 0310000	-165	6	165	102	13	23.7	46	37	29	3°	1.4	
3720 ※ 0320000	-180	6	180	118	13	25.4	46	37	29	3°	1.4	
3720 ※ 0330000	NBT-AHO40 or WBT-AHO40 -PHC07S -135	7	135	71	14	21.5	46	37	29	3°	1.3	
3720 ※ 0340000	-150	7	150	87	14	23.2	46	37	29	3°	1.4	
3720 ※ 0350000	-165	7	165	102	14	24.7	46	37	29	3°	1.4	
3720 ※ 0360000	-180	7	180	118	14	26.4	46	37	29	3°	1.5	
3720 ※ 0370000	NBT-AHO40 or WBT-AHO40 -PHC08S -135	8	135	72	15	22.6	46	50	29	3°	1.3	L-4T
3720 ※ 0380000	-150	8	150	87	15	24.2	46	50	29	3°	1.4	
3720 ※ 0390000	-165	8	165	103	15	25.8	46	50	29	3°	1.4	
3720 ※ 0400000	-180	8	180	118	15	27.4	46	50	29	3°	1.5	
3720 ※ 0410000	NBT-AHO40 or WBT-AHO40 -PHC09S -135	9	135	72	16	23.6	46	50	40	3°	1.3	
3720 ※ 0420000	-150	9	150	87	16	25.2	46	50	40	3°	1.4	
3720 ※ 0430000	-165	9	165	103	16	26.8	46	50	40	3°	1.5	
3720 ※ 0440000	-180	9	180	118	16	28.4	46	50	40	3°	1.5	

Inch to Metric (mm) → Inch × 25.4
Metric (mm) to Inch → Metric ÷ 25.4 or Metric × 0.03937

Special / Custom Sizes on request

Code	Model		d	L	L1	D1	D2	D3	ℓ	ℓ 1	α	Kg	Wrench (Option)
3720 ※ 0450000	NBT-AHO40 or WBT-AHO40 -PHC10S	-135	10	135	72	17	24.6	46	50	40	3°	1.4	
3720 ※ 0460000		-150	10	150	88	17	26.3	46	50	40	3°	1.4	
3720 ※ 0470000		-165	10	165	103	17	27.8	46	50	40	3°	1.5	
3720 ※ 0480000		-180	10	180	119	17	29.5	46	50	40	3°	1.5	
3720 ※ 0490000	NBT-AHO40 or WBT-AHO40 -PHC11S	-135	11	135	73	18	25.7	46	50	40	3°	1.4	
3720 ※ 0500000		-150	11	150	88	18	27.3	46	50	40	3°	1.4	
3720 ※ 0510000		-165	11	165	104	18	29.0	46	50	40	3°	1.5	
3720 ※ 0520000		-180	11	180	119	18	30.5	46	50	40	3°	1.6	L-4T
3720 ※ 0530000	NBT-AHO40 or WBT-AHO40 -PHC12S	-135	12	135	73	19	26.7	46	70	40	3°	1.4	
3720 ※ 0540000		-150	12	150	88	19	28.3	46	70	40	3°	1.4	
3720 ※ 0550000		-165	12	165	104	19	30.0	46	70	40	3°	1.5	
3720 ※ 0560000		-180	12	180	119	19	31.5	46	70	40	3°	1.6	
3720 ※0850000	NBT-AHO40 or WBT-AHO40 -PHC16S	-135	16	135	72	23	30.6	52.5	75	40	3°		
3720 ※0860000		-165	16	165	103	23	33.8	52.5	80	40	3°		
3720 ※0870000		-180	16	180	119	23	35.5	52.5	80	40	3°		
3720 ※0880000	NBT-AHO40 or WBT-AHO40 -PHC20S	-135	20	135	63	28	34.7	62	70	40	3°		
3720 ※0890000		-165	20	165	93	28	37.8	62	100	40	3°		
3720 ※0900000		-180	20	180	109	28	39.5	62	100	40	3°		L-6T
3720 ※0910000	NBT-AHO40 or WBT-AHO40 -PHC25S	-135	25	135	65	37	43.9	62	70	50	3°		
3720 ※0920000		-165	25	165	96	37	47.1	62	100	50	3°		
3720 ※0930000		-180	25	180	112	37	48.8	62	110	50	3°		
3720 ※ 0570000	NBT-AHO50 or WBT-AHO50 -PHC06S	-150	6	150	71	13	20.5	46	37	29	3°	3.4	
3720 ※ 0580000		-165	6	165	87	13	22.2	46	37	29	3°	3.4	
3720 ※ 0590000		-180	6	180	102	13	23.7	46	37	29	3°	3.5	
3720 ※ 0600000		-195	6	195	118	13	25.4	46	37	29	3°	3.5	
3720 ※ 0610000	NBT-AHO50 or WBT-AHO50 -PHC07S	-150	7	150	71	14	21.5	46	37	29	3°	3.4	
3720 ※ 0620000		-165	7	165	87	14	23.2	46	37	29	3°	3.4	
3720 ※ 0630000		-180	7	180	102	14	24.7	46	37	29	3°	3.5	
3720 ※ 0640000		-195	7	195	118	14	26.4	46	37	29	3°	3.5	
3720 ※ 0650000	NBT-AHO50 or WBT-AHO50 -PHC08S	-150	8	150	72	15	22.6	46	50	29	3°	3.4	
3720 ※ 0660000		-165	8	165	87	15	24.2	46	50	29	3°	3.4	
3720 ※ 0670000		-180	8	180	103	15	25.8	46	50	29	3°	3.5	
3720 ※ 0680000		-195	8	195	118	15	27.4	46	50	29	3°	3.5	
3720 ※ 0690000	NBT-AHO50 or WBT-AHO50 -PHC09S	-150	9	150	72	16	23.6	46	50	40	3°	3.4	
3720 ※ 0700000		-165	9	165	87	16	25.2	46	50	40	3°	3.4	
3720 ※ 0710000		-180	9	180	103	16	26.8	46	50	40	3°	3.5	
3720 ※ 0720000		-195	9	195	118	16	28.4	46	50	40	3°	3.6	L-4T
3720 ※ 0730000	NBT-AHO50 or WBT-AHO50 -PHC10S	-150	10	150	72	17	24.6	46	50	40	3°	3.4	
3720 ※ 0740000		-165	10	165	88	17	26.3	46	50	40	3°	3.5	
3720 ※ 0750000		-180	10	180	103	17	27.8	46	50	40	3°	3.5	
3720 ※ 0760000		-195	10	195	119	17	29.5	46	50	40	3°	3.6	
3720 ※ 0770000	NBT-AHO50 or WBT-AHO50 -PHC11S	-150	11	150	73	18	25.7	46	50	40	3°	3.4	
3720 ※ 0780000		-165	11	165	88	18	27.3	46	50	40	3°	3.5	
3720 ※ 0790000		-180	11	180	104	18	29.0	46	50	40	3°	3.5	
3720 ※ 0800000		-195	11	195	119	18	30.5	46	50	40	3°	3.6	
3720 ※ 0810000	NBT-AHO50 or WBT-AHO50 -PHC12S	-150	12	150	73	19	26.7	46	70	40	3°	3.4	
3720 ※ 0820000		-165	12	165	88	19	28.3	46	70	40	3°	3.5	
3720 ※ 0830000		-180	12	180	104	19	30.0	46	70	40	3°	3.6	
3720 ※ 0840000		-195	12	195	119	19	31.5	46	70	40	3°	3.6	
3720 ※0940000	NBT-AHO50 or WBT-AHO50 -PHC16S	-150	16	150	72	23	30.6	52.5	75	40	3°		
3720 ※0950000		-180	16	180	103	23	33.8	52.5	80	40	3°		
3720 ※0960000		-195	16	195	119	23	35.5	52.5	80	40	3°		
3720 ※0970000	NBT-AHO50 or WBT-AHO50 -PHC20S	-150	20	150	63	28	34.7	62	70	40	3°		
3720 ※0980000		-180	20	180	93	28	37.8	62	100	40	3°		
3720 ※0990000		-195	20	195	109	28	39.5	62	100	40	3°		L-6T
3720 ※1000000	NBT-AHO50 or WBT-AHO50 -PHC25S	-150	25	150	65	37	43.9	62	70	50	3°		
3720 ※1010000		-180	25	180	96	37	47.1	62	100	50	3°		
3720 ※1020000		-195	25	195	112	37	48.8	62	110	50	3°		

Please replace ※ in the code with 0 for NBT-AHO and 6 for WBT-AHO.

1. Tool shank diameter tolerance must be within h6.
2. Do not leave the holder with actuating screw tightened when the chuck is empty.
3. Hex-head screws are necessary to plug air hole for center through coolant feed.

Ordering Example

Corresponding to our two-face contact BT spindle

NBT-AHO50 - PHC 12 S - 150

Shank size | I.D. (d) | Projection length (L)

Ordering Example

Corresponding to BT two-face contact spindle

WBT-AHO50 - PHC 12 S - 150

Shank size | I.D. (d) | Projection length (L)

Tightening torque (Torque wrench : p.498)

model	I.D. (d) mm	Tightening torque (Nm)
PHC·S	06 ~ 12, 16	9 ~ 10
PHC·S	20 ~ 25	23 ~ 24

Hex. Wrench
P. 095

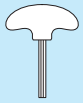

Inch to Metric (mm) → Inch × 25.4
Metric (mm) to Inch → Metric ÷ 25.4 or Metric × 0.03937

Special / Custom Sizes on request

SRD

Shrink Fit (DIN Standard)

※ AHO Retention Stud is required.

● Shrinkage method clamps a cutting tool firmly by heating and cooling the chuck. High precision, rigidity and strong Clamping force. (DIN Type)

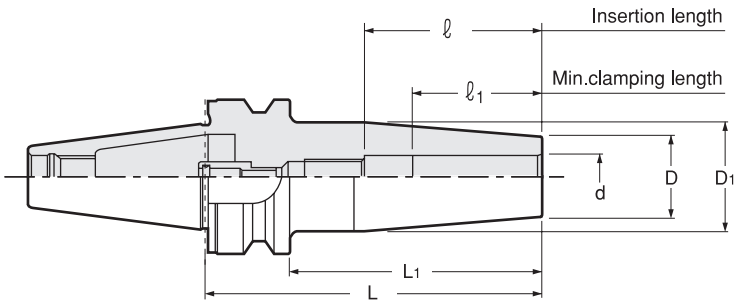



• Our two-face contact NBT spindle is incompatible with BT two-face contact spindle (for WBT-AHO). Please refer to P. 41.
• When AHO is used with center through coolant feeding, a designated retention stud (with coolant pipe) for AHO must be used.

Metric Sizes

Unit : Metric

Code	Model			d	L	L1	D	D1	ℓ1	ℓ
3820 ※ 2010000	**NBT-AHO30 or WBT-AHO30**	**-SRD6A**	**-80**	6	80	58	21	27	26	26 ~ 36
3820 ※ 2020000			**-105**	6	105	83	21	27	26	26 ~ 36
3820 ※ 2030000			**-120**	6	120	98	21	27	26	26 ~ 36
3820 ※ 2040000	**NBT-AHO30 or WBT-AHO30**	**-SRD8A**	**-80**	8	80	58	21	27	26	26 ~ 36
3820 ※ 2050000			**-105**	8	105	83	21	27	26	26 ~ 50
3820 ※ 2060000			**-120**	8	120	98	21	27	26	26 ~ 50
3820 ※ 2070000	**NBT-AHO30 or WBT-AHO30**	**-SRD10A**	**-80**	10	80	58	24	32	32	32 ~ 42
3820 ※ 2080000			**-105**	10	105	83	24	32	32	32 ~ 50
3820 ※ 2090000			**-120**	10	120	98	24	32	32	32 ~ 50
3820 ※ 2100000	**NBT-AHO30 or WBT-AHO30**	**-SRD12A**	**-90**	12	90	68	24	32	37	37 ~ 47
3820 ※ 2110000			**-105**	12	105	83	24	32	37	37 ~ 60
3820 ※ 2120000			**-120**	12	120	98	24	32	37	37 ~ 70
3820 ※ 2130000	**NBT-AHO30 or WBT-AHO30**	**-SRD14A**	**-90**	14	90	68	27	34	37	37 ~ 47
3820 ※ 2140000			**-105**	14	105	83	27	34	37	37 ~ 60
3820 ※ 2150000			**-120**	14	120	98	27	34	37	37 ~ 70
3820 ※ 2160000	**NBT-AHO30 or WBT-AHO30**	**-SRD16A**	**-90**	16	90	68	27	34	40	40 ~ 50
3820 ※ 2170000			**-105**	16	105	83	27	34	40	40 ~ 60
3820 ※ 2180000			**-120**	16	120	98	27	34	40	40 ~ 70
3820 ※ 2190000	**NBT-AHO40 or WBT-AHO40**	**-SRD6A**	**-90**	6	90	63	21	27	26	26 ~ 36
3820 ※ 2200000			**-120**	6	120	93	21	27	26	26 ~ 36
3820 ※ 2210000			**-160**	6	160	133	21	27	26	26 ~ 36
3820 ※ 2220000	**NBT-AHO40 or WBT-AHO40**	**-SRD8A**	**-90**	8	90	63	21	27	26	26 ~ 50
3820 ※ 2230000			**-120**	8	120	93	21	27	26	26 ~ 50
3820 ※ 2240000			**-160**	8	160	133	21	27	26	26 ~ 50
3820 ※ 2250000	**NBT-AHO40 or WBT-AHO40**	**-SRD10A**	**-90**	10	90	63	24	32	32	32 ~ 50
3820 ※ 2260000			**-120**	10	120	93	24	32	32	32 ~ 50
3820 ※ 2270000			**-160**	10	160	133	24	32	32	32 ~ 50
3820 ※ 2280000	**NBT-AHO40 or WBT-AHO40**	**-SRD12A**	**-90**	12	90	63	24	32	37	37 ~ 55
3820 ※ 2290000			**-120**	12	120	93	24	32	37	37 ~ 70
3820 ※ 2300000			**-160**	12	160	133	24	32	37	37 ~ 70
3820 ※ 2310000	**NBT-AHO40 or WBT-AHO40**	**-SRD14A**	**-90**	14	90	63	27	34	37	37 ~ 60
3820 ※ 2320000			**-120**	14	120	93	27	34	37	37 ~ 70
3820 ※ 2330000			**-160**	14	160	133	27	34	37	37 ~ 70
3820 ※ 2340000	**NBT-AHO40 or WBT-AHO40**	**-SRD16A**	**-90**	16	90	63	27	34	40	40 ~ 60
3820 ※ 2350000			**-120**	16	120	93	27	34	40	40 ~ 70
3820 ※ 2360000			**-160**	16	160	133	27	34	40	40 ~ 80

Inch to Metric (mm) → Inch × 25.4
Metric (mm) to Inch → Metric ÷ 25.4 or Metric × 0.03937

Special / Custom Sizes on request

Metric Sizes

Unit : Metric

Code	Model	d	L	L1	D	D1	ℓ1	ℓ
3820 ※ 2370000	NBT-AHO40 or WBT-AHO40 -SRD18A -105	18	105	78	33	42	40	40 ~ 60
3820 ※ 2380000	-120	18	120	93	33	42	40	40 ~ 70
3820 ※ 2390000	-160	18	160	133	33	42	40	40 ~ 80
3820 ※ 2400000	NBT-AHO40 or WBT-AHO40 -SRD20A -105	20	105	78	33	42	42	42 ~ 60
3820 ※ 2410000	-120	20	120	93	33	42	42	42 ~ 70
3820 ※ 2420000	-160	20	160	133	33	42	42	42 ~ 100
3820 ※ 2430000	NBT-AHO40 or WBT-AHO40 -SRD25A -105	25	105	78	44	53	48	48 ~ 60
3820 ※ 2440000	-120	25	120	93	44	53	48	48 ~ 70
3820 ※ 2450000	-160	25	160	133	44	53	48	48 ~ 105
3820 ※ 2460000	NBT-AHO40 or WBT-AHO40 -SRD32A -105	32	105	78	44	53	52	52 ~ 60
3820 ※ 2470000	-120	32	120	93	44	53	52	52 ~ 70
3820 ※ 2480000	-160	32	160	133	44	53	52	52 ~ 105
3820 ※ 2490000	NBT-AHO50 or WBT-AHO50 -SRD6A -100	6	100	62	21	27	26	26 ~ 36
3820 ※ 2500000	-120	6	120	82	21	27	26	26 ~ 50
3820 ※ 2510000	-160	6	160	122	21	27	26	37 ~ 55
3820 ※ 2520000	NBT-AHO50 or WBT-AHO50 -SRD8A -100	8	100	62	21	27	26	37 ~ 70
3820 ※ 2530000	-120	8	120	82	21	27	26	37 ~ 60
3820 ※ 2540000	-160	8	160	122	21	27	26	37 ~ 70
3820 ※ 2550000	NBT-AHO50 or WBT-AHO50 -SRD10A -100	10	100	62	24	32	32	37 ~ 70
3820 ※ 2560000	-120	10	120	82	24	32	32	32 ~ 50
3820 ※ 2570000	-160	10	160	122	24	32	32	32 ~ 50
3820 ※ 2580000	NBT-AHO50 or WBT-AHO50 -SRD12A -100	12	100	62	24	32	37	32 ~ 50
3820 ※ 2590000	-120	12	120	82	24	32	37	32 ~ 50
3820 ※ 2600000	-160	12	160	122	24	32	37	32 ~ 50
3820 ※ 2610000	NBT-AHO50 or WBT-AHO50 -SRD14A -100	14	100	62	27	34	37	32 ~ 50
3820 ※ 2620000	-120	14	120	82	27	34	37	32 ~ 50
3820 ※ 2630000	-160	14	160	122	27	34	37	32 ~ 50
3820 ※ 2640000	NBT-AHO50 or WBT-AHO50 -SRD16A -105	16	105	67	27	34	40	40 ~ 60
3820 ※ 2650000	-120	16	120	82	27	34	40	40 ~ 70
3820 ※ 2660000	-160	16	160	122	27	34	40	40 ~ 80
3820 ※ 2670000	NBT-AHO50 or WBT-AHO50 -SRD18A -105	18	105	67	33	42	40	40 ~ 60
3820 ※ 2680000	-120	18	120	82	33	42	40	40 ~ 70
3820 ※ 2690000	-160	18	160	122	33	42	40	40 ~ 80
3820 ※ 2700000	NBT-AHO50 or WBT-AHO50 -SRD20A -105	20	105	67	33	42	42	42 ~ 60
3820 ※ 2710000	-120	20	120	82	33	42	42	42 ~ 70
3820 ※ 2720000	-160	20	160	122	33	42	42	42 ~ 100
3820 ※ 2730000	NBT-AHO50 or WBT-AHO50 -SRD25A -110	25	110	72	44	53	48	48 ~ 65
3820 ※ 2740000	-135	25	135	97	44	53	48	48 ~ 85
3820 ※ 2750000	-160	25	160	122	44	53	48	48 ~ 110
3820 ※ 2760000	NBT-AHO50 or WBT-AHO50 -SRD32A -110	32	110	72	44	53	52	52 ~ 65
3820 ※ 2770000	-135	32	135	97	44	53	52	52 ~ 85
3820 ※ 2780000	-160	32	160	122	44	53	52	52 ~ 110

Please replace ※ in the code with 0 for NBT-AHO and 6 for WBT-AHO.

Always use carbide shank tools with h6 tolerance.

Heating device chart

heating device	chuck	
	SRD6A, SRD8A	SRD10A~SRD32A
ISG3400	Yes	Yes
SRK-HA1, HB2	No	Yes

Ordering Example

Corresponding to our two-face contact BT spindle

NBT-AHO40 - SRD 10 A - 105

Shank size | I.D. (d) | Projection length (L)

Ordering Example

Corresponding to BT two-face contact spindle

WBT-AHO40 - SRD 10 A - 105

Shank size | I.D. (d) | Projection length (L)

Inch to Metric (mm) → Inch × 25.4
Metric (mm) to Inch → Metric ÷ 25.4 or Metric × 0.03937

Special / Custom Sizes on request

SRS

Shrink Fit (Slim Type)

※ AHO Retention Stud is required.

● Shrinkage method clamps a cutting tool firmly by heating and cooling the chuck. High precision and strong Clamping force. (Slim Type)

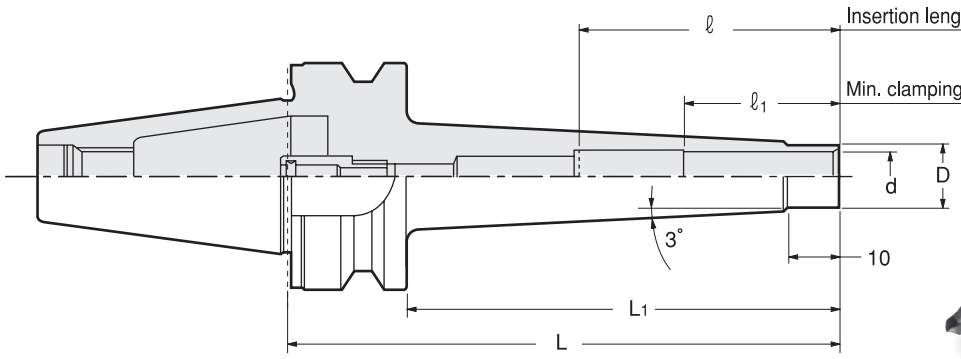

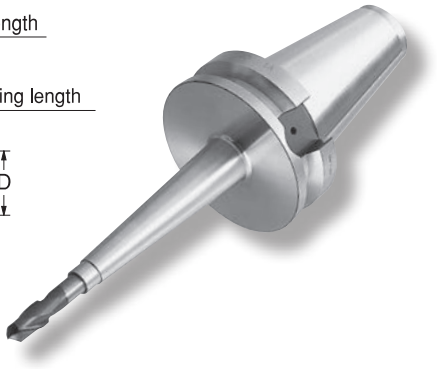

⚠ • Our two-face contact NBT spindle is incompatible with BT two-face contact spindle (for WBT-AHO). Please refer to P. 41.
• When AHO is used with center through coolant feeding, a designated retention stud (with coolant pipe) for AHO must be used.

Metric Sizes

Unit : Metric

Code	Model	d	L	L1	D	ℓ1	ℓ
3820 ※ 1370000	**NBT-AHO30 or WBT-AHO30 -SRS6A -105**	6	105	83	9	26	26 ~ 36
3820 ※ 1380000	**-135**	6	135	113	9	26	26 ~ 36
3820 ※ 1390000	**NBT-AHO30 or WBT-AHO30 -SRS8A -105**	8	105	83	11	26	26 ~ 50
3820 ※ 1400000	**-135**	8	135	113	11	26	26 ~ 50
3820 ※ 1410000	**NBT-AHO30 or WBT-AHO30 -SRS10A -105**	10	105	83	13	32	32 ~ 50
3820 ※ 1420000	**-135**	10	135	113	13	32	32 ~ 50
3820 ※ 1430000	**NBT-AHO30 or WBT-AHO30 -SRS12A -105**	12	105	83	15	37	37 ~ 70
3820 ※ 1440000	**-135**	12	135	113	15	37	37 ~ 70
3820 ※ 1450000	**NBT-AHO30 or WBT-AHO30 -SRS16A -105**	16	105	83	20	40	40 ~ 80
3820 ※ 1460000	**-135**	16	135	113	20	40	40 ~ 80
3820 ※ 1010000	**NBT-AHO40 or WBT-AHO40 -SRS6A -105**	6	105	78	9	26	26 ~ 36
3820 ※ 1020000	**-135**	6	135	108	9	26	26 ~ 36
3820 ※ 1030000	**NBT-AHO40 or WBT-AHO40 -SRS8A -105**	8	105	78	11	26	26 ~ 50
3820 ※ 1040000	**-135**	8	135	108	11	26	26 ~ 50
3820 ※ 1050000	**NBT-AHO40 or WBT-AHO40 -SRS10A -105**	10	105	78	13	32	32 ~ 50
3820 ※ 1060000	**-135**	10	135	108	13	32	32 ~ 50
3820 ※ 1070000	**-165**	10	165	138	13	32	32 ~ 50
3820 ※ 1080000	**NBT-AHO40 or WBT-AHO40 -SRS12A -105**	12	105	78	15	37	37 ~ 70
3820 ※ 1090000	**-135**	12	135	108	15	37	37 ~ 70
3820 ※ 1100000	**-165**	12	165	138	15	37	37 ~ 70
3820 ※ 1110000	**NBT-AHO40 or WBT-AHO40 -SRS16A -105**	16	105	78	20	40	40 ~ 80
3820 ※ 1120000	**-135**	16	135	108	20	40	40 ~ 80
3820 ※ 1130000	**-165**	16	165	138	20	40	40 ~ 80
3820 ※ 1140000	**NBT-AHO40 or WBT-AHO40 -SRS20A -105**	20	105	78	26	42	42 ~ 85
3820 ※ 1150000	**-135**	20	135	108	26	42	42 ~ 100
3820 ※ 1160000	**-165**	20	165	138	26	42	42 ~ 100
3820 ※ 1170000	**NBT-AHO50 or WBT-AHO50 -SRS6A -105**	6	105	67	9	26	26 ~ 36
3820 ※ 1180000	**-135**	6	135	97	9	26	26 ~ 36
3820 ※ 1190000	**NBT-AHO50 or WBT-AHO50 -SRS8A -105**	8	105	67	11	26	26 ~ 50
3820 ※ 1200000	**-135**	8	135	97	11	26	26 ~ 50
3820 ※ 1210000	**NBT-AHO50 or WBT-AHO50 -SRS10A -105**	10	105	67	13	32	32 ~ 50
3820 ※ 1220000	**-135**	10	135	97	13	32	32 ~ 50
3820 ※ 1230000	**-165**	10	165	127	13	32	32 ~ 50
3820 ※ 1240000	**-195**	10	195	157	13	32	32 ~ 50
3820 ※ 1250000	**NBT-AHO50 or WBT-AHO50 -SRS12A -105**	12	105	67	15	37	37 ~ 70
3820 ※ 1260000	**-135**	12	135	97	15	37	37 ~ 70
3820 ※ 1270000	**-165**	12	165	127	15	37	37 ~ 70
3820 ※ 1280000	**-195**	12	195	157	15	37	37 ~ 70

Inch to Metric (mm) → Inch × 25.4
Metric (mm) to Inch → Metric ÷ 25.4 or Metric × 0.03937

Special / Custom Sizes on request

Metric Sizes

Unit : Metric

Code	Model	d	L	L1	D	ℓ1	ℓ
3820 ※ 1290000	**NBT-AHO50 or WBT-AHO50 -SRS16A -105**	16	105	67	20	40	40 ~ 80
3820 ※ 1300000	**-135**	16	135	97	20	40	40 ~ 80
3820 ※ 1310000	**-165**	16	165	127	20	40	40 ~ 80
3820 ※ 1320000	**-195**	16	195	157	20	40	40 ~ 80
3820 ※ 1330000	**NBT-AHO50 or WBT-AHO50 -SRS20A -105**	20	105	67	26	42	42 ~ 85
3820 ※ 1340000	**-135**	20	135	97	26	42	42 ~ 100
3820 ※ 1350000	**-165**	20	165	127	26	42	42 ~ 100
3820 ※ 1360000	**-195**	20	195	157	26	42	42 ~ 100

Please replace ※ in the code with 0 for NBT-AHO and 6 for WBT-AHO.

Always use carbide shank tools with h6 tolerance.

Heating device chart

heating device	chuck	
	SRS6A, SRS8A	SRS10A~SRS20A
ISG3400	Yes	Yes
SRK-HA1, HB2	No	Yes

Ordering Example

Corresponding to our two-face contact BT spindle

NBT-AHO40 - SRS 12 A - 105

Shank size | I.D. (d) | Projection length (L)

Ordering Example

Corresponding to BT two-face contact spindle

WBT-AHO40 - SRS 12 A - 105

Shank size | I.D. (d) | Projection length (L)

Inch to Metric (mm) → Inch × 25.4
Metric (mm) to Inch → Metric ÷ 25.4 or Metric × 0.03937

Special / Custom Sizes on request

STM

Synchronous Tap Holder With Easy Tool Length Adjustment

※ AHO Retention Stud is required.

● Projection length of the cutting tool can be adjusted by simply turning circumference of the holder.

⚠ For capable tap sizes, please refer to P.462-464 chart.

（NOTE）Nut O.D. of STM8 is 19mm.

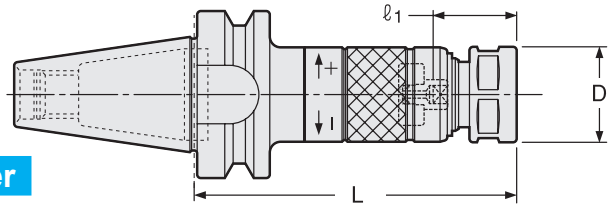

STM Holder + Collet + STS Driver

⚠
- Our two-face contact NBT spindle is incompatible with BT two-face contact spindle (for WBT-AHO). Please refer to P. 41.
- When AHO is used with center through coolant feeding, a designated retention stud (with coolant pipe) for AHO must be used.

Unit : Metric

Code	Model	Tap Size	L	D	Nut	Collet	Preset Driver	Spanner
3740 ※ 0010000	NBT-AHO30 or WBT-AHO30 -STM8 -75 ＊	Old JIS Taps M4 ～ 8 U No8 ～ 5/16 OSG Synchro Taps M4 ～ 6	75	21	KDP-1414	FDC-07	STS-8	Flat 17mm width
3740 ※ 0020000	-90		90	21	KDP-1414			
3740 ※ 0030000	-105		105	21	KDP-1414			
3740 ※ 0040000	-120		120	21	KDP-1414			
3740 ※ 0050000	-135		135	21	KDP-1414			
3740 ※ 0060000	-150		150	21	KDP-1414			
3740 ※ 0070000	NBT-AHO30 or WBT-AHO30 -STM12-75 ＊	Old JIS Taps M4 ～ 12 U No8 ～ 7/16 PT1/8 OSG Synchro Taps M4 ～ 10	75	26	HTP-09	FSC-09	STS-12	S-1L
3740 ※ 0080000	-90		90	26	HTP-09			
3740 ※ 0090000	-105		105	26	HTP-09			
3740 ※ 0100000	-120		120	26	HTP-09			
3740 ※ 0110000	-135		135	26	HTP-09			
3740 ※ 0120000	-150		150	26	HTP-09			
3740 ※ 0130000	-165		165	26	HTP-09			
3740 ※ 0140000	NBT-AHO30 or WBT-AHO30 -STM18-90	Old JIS Taps M14 ～ 18 U1/2 ～ 3/4 PT1/4 ～ 3/8 OSG Synchro Taps M12 ～ 14	90	36	HTP-16	FSC-16	STS-18	S-4L
3740 ※ 0150000	-105		105	36	HTP-16			
3740 ※ 0160000	-120		120	36	HTP-16			
3740 ※ 0170000	-135		135	36	HTP-16			
3740 ※ 0180000	-150		150	36	HTP-16			
3740 ※ 0190000	-165		165	36	HTP-16			
3740 ※ 0200000	NBT-AHO30 or WBT-AHO30 -STM30-105	Old JIS Taps M20 ～ 30 U7/8 ～ 1-1/8 PT1/2 ～ 3/4 OSG Synchro Taps M16 ～ 27	105	46	HTP-22	FSC-22	STS-30	S-5L
3740 ※ 0210000	-120		120	46	HTP-22			
3740 ※ 0220000	-135		135	46	HTP-22			
3740 ※ 0230000	-150		150	46	HTP-22			
3740 ※ 0240000	-165		165	46	HTP-22			
3740 ※ 0250000	NBT-AHO40 or WBT-AHO40 -STM8 -90	Old JIS Taps M4 ～ 8 U No8 ～ 5/16 OSG Synchro Taps M4 ～ 6	90	21	KDP-1414	FDC-07	STS-8	Flat 17mm width
3740 ※ 0260000	-105		105	21	KDP-1414			
3740 ※ 0270000	-120		120	21	KDP-1414			
3740 ※ 0280000	-135		135	21	KDP-1414			
3740 ※ 0290000	-150		150	21	KDP-1414			
3740 ※ 0300000	NBT-AHO40 or WBT-AHO40 -STM12-90	Old JIS Taps M4 ～ 12 U No8 ～ 7/16 PT1/8 OSG Synchro Taps M4 ～ 10	90	26	HTP-09	FSC-09	STS-12	S-1L
3740 ※ 0310000	-105		105	26	HTP-09			
3740 ※ 0320000	-120		120	26	HTP-09			
3740 ※ 0330000	-135		135	26	HTP-09			
3740 ※ 0340000	-150		150	26	HTP-09			
3740 ※ 0350000	-180		180	26	HTP-09			
3740 ※ 0360000	NBT-AHO40 or WBT-AHO40 -STM18-105	Old JIS Taps M14 ～ 18 U1/2 ～ 3/4 PT1/4 ～ 3/8 OSG Synchro Taps M12 ～ 14	105	36	HTP-16	FSC-16	STS-18	S-4L
3740 ※ 0370000	-120		120	36	HTP-16			
3740 ※ 0380000	-135		135	36	HTP-16			
3740 ※ 0390000	-150		150	36	HTP-16			
3740 ※ 0400000	-180		180	36	HTP-16			
3740 ※ 0410000	NBT-AHO40 or WBT-AHO40 -STM30-120	Old JIS Taps M20 ～ 30 U7/8 ～ 1-1/8 PT1/2 ～ 3/4 OSG Synchro Taps M16 ～ 27	120	46	HTP-22	FSC-22	STS-30	S-5L
3740 ※ 0420000	-135		135	46	HTP-22			
3740 ※ 0430000	-150		150	46	HTP-22			
3740 ※ 0440000	-180		180	46	HTP-22			
3740 ※ 0450000	NBT-AHO50 or WBT-AHO50 -STM8 -90 ＊	Old JIS Taps M4 ～ 8 U No8 ～ 5/16 OSG Synchro Taps M4 ～ 6	90	21	KDP-1414	FDC-07	STS-8	Flat 17mm width
3740 ※ 0460000	-105		105	21	KDP-1414			
3740 ※ 0470000	-120		120	21	KDP-1414			
3740 ※ 0480000	-135		135	21	KDP-1414			
3740 ※ 0490000	-150		150	21	KDP-1414			
3740 ※ 0500000	-165		165	21	KDP-1414			
3740 ※ 0510000	NBT-AHO50 or WBT-AHO50 -STM12-90 ＊	Old JIS Taps M4 ～ 12 U No8 ～ 7/16 PT1/8 OSG Synchro Taps M4 ～ 10	90	26	HTP-09	FSC-09	STS-12	S-1L
3740 ※ 0520000	-105		105	26	HTP-09			
3740 ※ 0530000	-120		120	26	HTP-09			
3740 ※ 0540000	-135		135	26	HTP-09			
3740 ※ 0550000	-150		150	26	HTP-09			
3740 ※ 0560000	-180		180	26	HTP-09			

Inch to Metric (mm) → Inch × 25.4
Metric (mm) to Inch → Metric ÷ 25.4 or Metric × 0.03937

Special / Custom Sizes on request

Code	Model	Tap Size	L	D	Nut	Collet	Preset Driver	Spanner
3740 ※ 0570000	NBT-AHO50 or WBT-AHO50 -STM18-105	Old JIS Taps M14 ～ 18 U1/2 ～ 3/4 PT1/4 ～ 3/8 OSG Synchro Taps M12 ～ 14	105	36	HTP-16	FSC-16	STS-18	S-4L
3740 ※ 0580000	-120		120	36	HTP-16			
3740 ※ 0590000	-135		135	36	HTP-16			
3740 ※ 0600000	-150		150	36	HTP-16			
3740 ※ 0610000	-180		180	36	HTP-16			
3740 ※ 0620000	NBT-AHO50 or WBT-AHO50 -STM30-120	Old JIS Taps M20 ～ 30 U7/8 ～ 1-1/8 PT1/2 ～ 3/4 OSG Synchro Taps M16 ～ 27	120	46	HTP-22	FSC-22	STS-30	S-5L
3740 ※ 0630000	-135		135	46	HTP-22			
3740 ※ 0640000	-150		150	46	HTP-22			
3740 ※ 0650000	-180		180	46	HTP-22			
3740 ※ 0660000	-210		210	46	HTP-22			

Please replace ※ in the code with 0 for NBT-AHO and 6 for WBT-AHO.

1. Collet, spanner and preset driver are sold separately.
2. Please see below for ℓ1 dimension.
3. Tap holes smaller than M4 can be made by STM8. Collets to be used are as follows.
   M1-M2.6: FDC-03007- ※※ M3-M3.5: FDC-04007- ※※
   Tap drive will not be used for the above usages.

Collet P.270



Preset driver P.268-269

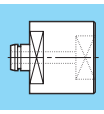

Ordering Example
Corresponding to our two-face contact BT spindle

NBT-AHO40 - STM 18 - 120
Shank size / Holder size / Projection length (L)

Ordering Example
Corresponding to BT two-face contact spindle

WBT-AHO40 - STM 18 - 120
Shank size / Holder size / Projection length (L)

ℓ1 Dimension for STM

Old JIS Taps

Without center-through coolant

Tap Size	ℓ1	ℓ1(＊)
M4 ～ 6 U No.8 ～ 1/4	21 ～ 35	21 ～ 26
M7 ～ 12 U 5/16 ～ U7/16 PT1/8	23 ～ 37	23 ～ 28
M13 ～ 15 U 1/2 ～ 5/8 PT1/4	28 ～ 42	-
M16 ～ 17	32 ～ 45	-
M18 ～ 27 U 3/4 ～ U1 PT3/8 ～ 5/8	33 ～ 47	-
M30 U1-1/8 PT3/4	38 ～ 52	-

With center-through coolant (STM8)

Tap Size	ℓ1	ℓ1(＊)
M4 ～ 6 U No.8 ～ 1/4	25 ～ 35	25 ～ 26
M7 ～ 8 U5/16	26 ～ 37	26 ～ 28

With center-through coolant (STM12 ～ 30)

Tap Size	ℓ1	ℓ1(＊)
M4 ～ 6 U No.8 ～ 1/4	24 ～ 35	24 ～ 26
M7 ～ 10 U 5/16 ～ 3/8	25 ～ 37	25 ～ 28
M11 ～ 12 U 7/16 PT 1/8	26 ～ 37	26 ～ 28
U1/2	32 ～ 42	-
M13 ～ 15 U9/16	33 ～ 42	-
U5/8 PT1/4	34 ～ 42	-
M16	35 ～ 46	-
M18 U 3/4 PT3/8	36 ～ 47	-
M20 ～ 21 PT1/2	40 ～ 47	-
M22 U 7/8	41 ～ 47	-
M23	42 ～ 47	-
M24 ～ 25 PT5/8	43 ～ 47	-
M26 ～ 27 U1	44 ～ 47	-
M28	45 ～ 52	-
M30 PT3/4	46 ～ 52	-
U 1-1/8	48 ～ 52	-

OSG Synchro Taps

Without center-through coolant

Tap Size	ℓ1	ℓ1(＊)
M4 ～ 6	21 ～ 35	21 ～ 26
M8 ～ 10	23 ～ 37	23 ～ 28
M12 ～ 14	28 ～ 42	-
M16 ～ 27	33 ～ 47	-

With center-through coolant (STM8)

Tap Size	ℓ1	ℓ1(＊)
M4 ～ 6	25 ～ 35	25 ～ 26

With center-through coolant (STM12 ～ 30)

Tap Size	ℓ1	ℓ1(＊)
M4 ～ 6	24 ～ 35	24 ～ 26
M8 ～ 10	26 ～ 37	26 ～ 28
M12	33 ～ 42	-
M14	34 ～ 42	-
M16 ～ 20	40 ～ 46	-
M22 ～ 27	44 ～ 47	-

YAMAWA X Series

Without center-through coolant

Tap Size	ℓ1	ℓ1(＊)
M6 M8	23 ～ 37	23 ～ 28
M10 M12	28 ～ 42	-

With center-through coolant (STM8)

Tap Size	ℓ1	ℓ1(＊)
M6	26 ～ 37	26 ～ 28

With center-through coolant (STM12 ～ 30)

Tap Size	ℓ1	ℓ1(＊)
M6	25 ～ 37	25 ～ 28
M8	26 ～ 37	26 ～ 28
M10	33 ～ 42	-
M12	34 ～ 42	-

Inch to Metric (mm) → Inch × 25.4
Metric (mm) to Inch → Metric ÷ 25.4 or Metric × 0.03937

Special / Custom Sizes on request

Tap size reference chart (collet, preset driver)

FDC-07 or FSC - collet

OH Type

● OH type collet should be used for center-through coolant feeding and external coolant feeding.

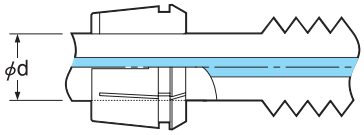

C Type

● when "collet-through" coolant feeding is needed.

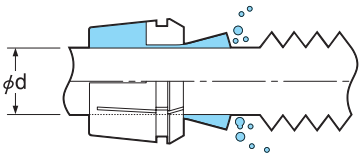

※ Please select OH type for non-coolant use.

preset driver & tool for changing driver

STS Type

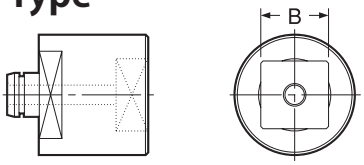

STS-R Type

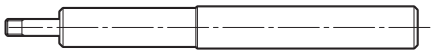

Holder Model	Tap Size					ød	Collet Model (OH or C)	B	Preset Driver	Tool for Changing Driver
	Old JIS Taps			OSG Synchro-Taps	YAMAWA X Series					
	Metric Thread	Unified Thread	Pipe Taper Thread							
STM8	M4~M4.5	UNo.8				5.0	FDC-05007-**	4.0	STS8-□4.0	STS-R0
	M5~M5.5	UNo.10~12				5.5	FDC-05507-**	4.5	STS8-□4.5	STS-R0
	M6	U1/4		M4~M6		6.0	FDC-06007-**	4.5	STS8-□4.5	STS-R0
					M6	6.0	FDC-06007-**	4.9	STS8-□4.9	STS-R0
		U5/16				6.1	FDC-06107-**	5.0	STS8-□5.0	STS-R0
	M7~8					6.2	FDC-06207-**	5.0	STS8-□5.0	STS-R0
STM12	M4~M4.5	UNo.8				5.0	FSC-09-5.0-**	4.0	STS12-□4.0	STS-R1
	M5~M5.5	UNo.10~12				5.5	FSC-09-5.5-**	4.5	STS12-□4.5	STS-R1
	M6	U1/4		M4~M6		6.0	FSC-09-6.0-**	4.5	STS12-□4.5	STS-R1
					M6	6.0	FSC-09-6.0-**	4.9	STS12-□4.9	STS-R1
		U5/16				6.1	FSC-09-6.1-**	5.0	STS12-□5.0	STS-R1
	M7~8					6.2	FSC-09-6.2-**	5.0	STS12-□5.0	STS-R1
	M9~M10	U3/8				7.0	FSC-09-7.0-**	5.5	STS12-□5.5	STS-R1
					M8	8.0	FSC-09-8.0-**	6.2	STS12-□6.2	STS-R1
	M11	U7/16	PT1/16~1/8	M8~M10		8.0	FSC-09-8.0-**	6.0	STS12-□6.0	STS-R1
	M12					8.5	FSC-09-8.5-**	6.5	STS12-□6.5	STS-R1
STM18		U1/2				9.0	FSC-16-9.0-**	7.0	STS18-□7.0	STS-R2
	M13					9.5	FSC-16-9.5-**	7.0	STS18-□7.0	STS-R2
				M12	M10	10.0	FSC-16-10.0-**	8.0	STS18-□8.0	STS-R2
	M14~15	U9/16				10.5	FSC-16-10.5-**	8.0	STS18-□8.0	STS-R2
			PT1/4			11.0	FSC-16-11.0-**	9.0	STS18-□9.0	STS-R2
		U5/8		M14	M12	12.0	FSC-16-12.0-**	9.0	STS18-□9.0	STS-R2
	M16					12.5	FSC-16-12.5-**	10.0	STS18-□10.0	STS-R2
	M17					13.0	FSC-16-13.0-**	10.0	STS18-□10.0	STS-R2
	M18~M19	U3/4	PT3/8			14.0	FSC-16-14.0-**	11.0	STS18-□11.0	STS-R2
STM30	M20					15.0	FSC-22-15.0-**	12.0	STS30-□12.0	STS-R2
	M21			M16~M20		16.0	FSC-22-16.0-**	12.0	STS30-□12.0	STS-R2
	M22	U7/8				17.0	FSC-22-17.0-**	13.0	STS30-□13.0	STS-R2
	M23		PT1/2			18.0	FSC-22-18.0-**	14.0	STS30-□14.0	STS-R2
	M24~M25		PT5/8			19.0	FSC-22-19.0-**	15.0	STS30-□15.0	STS-R2
	M26~M27	U1		M22~M27		20.0	FSC-22-20.0-**	15.0	STS30-□15.0	STS-R2
	M28					21.0	FSC-22-21.0-**	17.0	STS30-□17.0	STS-R2
		U1-1/8				22.0	FSC-22-22.0-**	17.0	STS30-□17.0	STS-R2
	M30		PT3/4			23.0	FSC-22-23.0-**	17.0	STS30-□17.0	STS-R2

Ordering Example

FSC - 22 - 20.0 - OH

- 22: Collet size
- 20.0: Collet I.D. (d)
- OH: for tool with coolant hole; C: for collet through

Combination of accessories

Tap holder	Collet	Preset driver		Nut		Tool changing driver		Spanner	
Model	Model	Model	Code	Model	Code	Model	Code	Model	Code
STM8	FDC-07	STS8	3914 0100**03	KDP-1414	0070 01001407	STS-R0	3914 00000006	Flat 17mm width	
STM12	FSC-09	STS12	3914 1100**03	HTP-09	1314 00000009	STS-R1	3914 10000006	S-1L	0803 00000011
STM18	FSC-16	STS18	3914 310***03	HTP-16	1314 00000016	STS-R2	3914 30000006	S-4L	0803 00000014
STM30	FSC-22	STS30	3914 410***03	HTP-22	1314 00000022	STS-R2	3914 30000006	S-5L	0803 00000015

Inch to Metric (mm) → Inch × 25.4
Metric (mm) to Inch → Metric ÷ 25.4 or Metric × 0.03937

Special / Custom Sizes on request

Tap size reference chart (collet, preset driver)

FDC-07 or FSC - collet

OH Type

● OH type collet should be used for center-through coolant feeding and external coolant feeding.

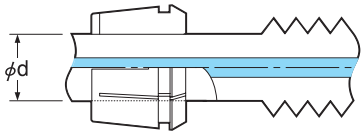

C Type

● when "collet-through" coolant feeding is needed.

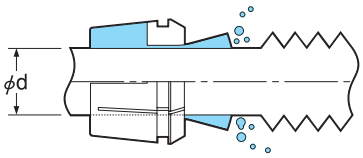

B : Square dimension **ød : Shank dimension**

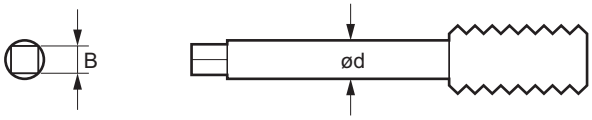

preset driver & tool for changing driver

STS Type

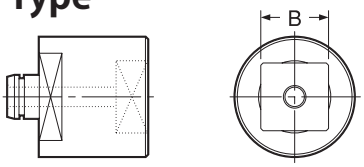

STS-R Type

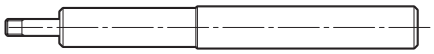

※ Please select OH type for non-coolant use.

Holder Model	Tap Size (ANSI)	ød (inch)	ød (mm)	Collet Model (OH or C)	B (inch)	B (mm)	Preset Driver
STM8	#0-6	0.141	3.5814	FDC-03607**	0.110	2.794	STS8- □ 2.8
	#8	0.168	4.2672	FDC-04307**	0.131	3.3274	STS8- □ 3.4
	#10	0.194	4.9276	FDC-05007**	0.152	3.8608	STS8- □ 4.0
	#12	0.22	5.588	FDC-05607**	0.165	4.191	STS8- □ 4.2
	1/4	0.255	6.477	FDC-06507**	0.191	4.8514	STS8- □ 5.0
STM12	#0-6	0.141	3.5814	FSC-09-3.6**	0.110	2.794	STS12- □ 2.8
	#8	0.168	4.2672	FSC-09-4.3**	0.131	3.3274	STS12- □ 3.4
	#10	0.194	4.9276	FSC-09-5.0**	0.152	3.8608	STS12- □ 4.0
	#12	0.22	5.588	FSC-09-5.6**	0.165	4.191	STS12- □ 4.2
	1/4	0.255	6.477	FSC-09-6.5**	0.191	4.8514	STS12- □ 5.0
	1/8SPT	0.313	7.9502	FSC-09-8.0**	0.234	5.9436	STS12- □ 6.0
	5/16	0.318	8.0772	FSC-09-8.1**	0.238	6.0452	STS12- □ 6.1
	7/16	0.323	8.2042	FSC-09-8.3**	0.242	6.1468	STS12- □ 6.2
STM18	1/2	0.367	9.3218	FSC-16-9.4**	0.275	6.985	STS18- □ 7.0
	3/8	0.381	9.6774	FSC-16-9.7**	0.286	7.2644	STS18- □ 7.3
	9/16	0.429	10.8966	FSC-16-10.9**	0.322	8.1788	STS18- □ 8.2
	1/8LPT	0.437	11.0998	FSC-16-11.1**	0.328	8.3312	STS18- □ 8.4
	5/8	0.48	12.192	FSC-16-12.2**	0.360	9.144	STS18- □ 9.2
	11/16	0.542	13.7668	FSC-16-13.8**	0.406	10.3124	STS18- □ 10.4
	1/4PT	0.562	14.2748	FSC-16-14.3**	0.421	10.6934	STS18- □ 10.7
STM30	3/4	0.59	14.986	FSC-22-15.0**	0.442	11.2268	STS30- □ 11.3
	13/16	0.652	16.5608	FSC-22-16.6**	0.489	12.4206	STS30- □ 12.5
	7/8	0.697	17.7038	FSC-22-17.8**	0.523	13.2842	STS30- □ 13.3
	3/8PT	0.7	17.78	FSC-22-17.8**	0.531	13.4874	STS30- □ 13.5
	1	0.8	20.32	FSC-22-20.4**	0.600	15.24	STS30- □ 15.3

For DIN and ISO, please refer to P.463-464.

Ordering Example

FSC - 22 - 20.4 - OH

- 22: Collet size
- 20.4: Collet I.D. (d)
- OH: for tool with coolant hole
- C: for collet through

Combination of accessories

Tap holder	Collet	Preset driver		Nut		Tool changing driver		Spanner	
Model	Model	Model	Code	Model	Code	Model	Code	Model	Code
STM8	**FDC-07**	STS8	3914 0100**03	**KDP-1414**	0070 01001407	**STS-R0**	3914 00000006	**Flat 17mm width**	
STM12	**FSC-09**	STS12	3914 1100**03	**HTP-09**	1314 00000009	**STS-R1**	3914 10000006	**S-1L**	0803 00000011
STM18	**FSC-16**	STS18	3914 310***03	**HTP-16**	1314 00000016	**STS-R2**	3914 30000006	**S-4L**	0803 00000014
STM30	**FSC-22**	STS30	3914 410***03	**HTP-22**	1314 00000022	**STS-R2**	3914 30000006	**S-5L**	0803 00000015

Inch to Metric (mm) → Inch × 25.4
Metric (mm) to Inch → Metric ÷ 25.4 or Metric × 0.03937

Special / Custom Sizes on request

FSC

Collet For Tapper

FSC-OH

For tool with coolant hole

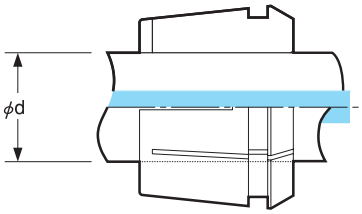

Tool Shank Dia.		Size	Code
ød (inch)	ød (mm)		
ø 0.141	ø 3.6	**FSC-09-3.6-OH**	—
ø 0.168	ø 4.3	**FSC-09-4.3-OH**	1334 00104309
ø 0.194	ø 5.0	**FSC-09-5.0-OH**	1334 00105009
ø 0.220	ø 5.6	**FSC-09-5.6-OH**	1334 00105609
ø 0.216	ø 5.5	**FSC-09-5.5-OH**	1334 00105509
ø 0.236	ø 6.0	**FSC-09-6.0-OH**	1334 00106009
ø 0.240	ø 6.1	**FSC-09-6.1-OH**	1334 00106109
ø 0.244	ø 6.2	**FSC-09-6.2-OH**	1334 00106209
ø 0.255	ø 6.5	**FSC-09-6.5-OH**	1334 00106509
ø 0.275	ø 7.0	**FSC-09-7.0-OH**	1334 00107009
ø 0.314	ø 8.0	**FSC-09-8.0-OH**	1334 00108009
ø 0.313	ø 8.0	**FSC-09-8.0-OH**	1334 00108009
ø 0.318	ø 8.1	**FSC-09-8.1-OH**	1334 00108109
ø 0.323	ø 8.3	**FSC-09-8.3-OH**	1334 00108309
ø 0.334	ø 8.5	**FSC-09-8.5-OH**	1334 00108509
ø 0.354	ø 9.0	**FSC-16-9.0-OH**	1334 00109016
ø 0.367	ø 9.4	**FSC-16-9.4-OH**	1334 00109416
ø 0.374	ø 9.5	**FSC-16-9.5-OH**	1334 00109516
ø 0.381	ø 9.7	**FSC-16-9.7-OH**	1334 00109716
ø 0.393	ø 10.0	**FSC-16-10.0-OH**	1334 00110016
ø 0.413	ø 10.5	**FSC-16-10.5-OH**	1334 00110516
ø 0.429	ø 10.9	**FSC-16-10.9-OH**	1334 00110916
ø 0.433	ø 11.0	**FSC-16-11.0-OH**	1334 00111016
ø 0.437	ø 11.1	**FSC-16-11.1-OH**	1334 00111116
ø 0.472	ø 12.0	**FSC-16-12.0-OH**	1334 00112016
ø 0.480	ø 12.2	**FSC-16-12.2-OH**	1334 00112216
ø 0.492	ø 12.5	**FSC-16-12.5-OH**	1334 00112516
ø 0.511	ø 13.0	**FSC-16-13.0-OH**	1334 00113016
ø 0.542	ø 13.8	**FSC-16-13.8-OH**	1334 00113816
ø 0.551	ø 14.0	**FSC-16-14.0-OH**	1334 00114016
ø 0.562	ø 14.3	**FSC-16-14.3-OH**	1334 00114316
ø 0.590	ø 15.0	**FSC-22-15.0-OH**	1334 00115022
ø 0.629	ø 16.0	**FSC-22-16.0-OH**	1334 00116022
ø 0.652	ø 16.6	**FSC-22-16.6-OH**	1334 00116622
ø 0.669	ø 17.0	**FSC-22-17.0-OH**	1334 00117022
ø 0.697	ø 17.8	**FSC-22-17.8-OH**	1334 00117822
ø 0.700	ø 17.8	**FSC-22-17.8-OH**	1334 00117822
ø 0.708	ø 18.0	**FSC-22-18.0-OH**	1334 00118022
ø 0.748	ø 19.0	**FSC-22-19.0-OH**	1334 00119022
ø 0.800	ø 20.4	**FSC-22-20.4-OH**	1334 00120422
ø 0.787	ø 20.0	**FSC-22-20.0-OH**	1334 00120022
ø 0.826	ø 21.0	**FSC-22-21.0-OH**	1334 00121022
ø 0.866	ø 22.0	**FSC-22-22.0-OH**	1334 00122022
ø 0.905	ø 23.0	**FSC-22-23.0-OH**	1334 00123022

FSC-C

For Collet through

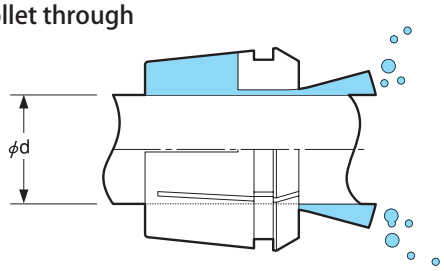

Tool Shank Dia.		Size	Code
ød (inch)	ød (mm)		
ø 0.141	ø 3.6	**FSC-09-3.6-C**	—
ø 0.168	ø 4.3	**FSC-09-4.3-C**	1335 00104309
ø 0.194	ø 5.0	**FSC-09-5.0-C**	1335 00105009
ø 0.220	ø 5.6	**FSC-09-5.6-C**	1335 00105609
ø 0.216	ø 5.5	**FSC-09-5.5-C**	1335 00105509
ø 0.236	ø 6.0	**FSC-09-6.0-C**	1335 00106009
ø 0.240	ø 6.1	**FSC-09-6.1-C**	1335 00106109
ø 0.244	ø 6.2	**FSC-09-6.2-C**	1335 00106209
ø 0.255	ø 6.5	**FSC-09-6.5-C**	1335 00106509
ø 0.275	ø 7.0	**FSC-09-7.0-C**	1335 00107009
ø 0.314	ø 8.0	**FSC-09-8.0-C**	1335 00108009
ø 0.313	ø 8.0	**FSC-09-8.0-C**	1335 00108009
ø 0.318	ø 8.1	**FSC-09-8.1-C**	1335 00108109
ø 0.323	ø 8.3	**FSC-09-8.3-C**	1335 00108309
ø 0.334	ø 8.5	**FSC-09-8.5-C**	1335 00108509
ø 0.354	ø 9.0	**FSC-16-9.0-C**	1335 00109016
ø 0.367	ø 9.4	**FSC-16-9.4-C**	1335 00109416
ø 0.374	ø 9.5	**FSC-16-9.5-C**	1335 00109516
ø 0.381	ø 9.7	**FSC-16-9.7-C**	1335 00109716
ø 0.393	ø 10.0	**FSC-16-10.0-C**	1335 00110016
ø 0.413	ø 10.5	**FSC-16-10.5-C**	1335 00110516
ø 0.429	ø 10.9	**FSC-16-10.9-C**	1335 00110916
ø 0.433	ø 11.0	**FSC-16-11.0-C**	1335 00111016
ø 0.437	ø 11.1	**FSC-16-11.1-C**	1335 00111116
ø 0.472	ø 12.0	**FSC-16-12.0-C**	1335 00112016
ø 0.480	ø 12.2	**FSC-16-12.2-C**	1335 00112216
ø 0.492	ø 12.5	**FSC-16-12.5-C**	1335 00112516
ø 0.511	ø 13.0	**FSC-16-13.0-C**	1335 00113016
ø 0.542	ø 13.8	**FSC-16-13.8-C**	1335 00113816
ø 0.551	ø 14.0	**FSC-16-14.0-C**	1335 00114016
ø 0.562	ø 14.3	**FSC-16-14.3-C**	1335 00114316
ø 0.590	ø 15.0	**FSC-22-15.0-C**	1335 00115022
ø 0.629	ø 16.0	**FSC-22-16.0-C**	1335 00116022
ø 0.652	ø 16.6	**FSC-22-16.6-C**	1335 00116622
ø 0.669	ø 17.0	**FSC-22-17.0-C**	1335 00117022
ø 0.697	ø 17.8	**FSC-22-17.8-C**	1335 00117822
ø 0.700	ø 17.8	**FSC-22-17.8-C**	1335 00117822
ø 0.708	ø 18.0	**FSC-22-18.0-C**	1335 00118022
ø 0.748	ø 19.0	**FSC-22-19.0-C**	1335 00119022
ø 0.800	ø 20.4	**FSC-22-20.4-C**	1335 00120422
ø 0.787	ø 20.0	**FSC-22-20.0-C**	1335 00120022
ø 0.826	ø 21.0	**FSC-22-21.0-C**	1335 00121022
ø 0.866	ø 22.0	**FSC-22-22.0-C**	1335 00122022
ø 0.905	ø 23.0	**FSC-22-23.0-C**	1335 00123022

OH type shall be selected in case not utilizing coolant through from the machine spindle.

Ordering Example

FSC - 16 - 9.0 - OH

16 Series — Tool Shank Dia.

Ordering Example

FSC - 16 - 9.0 - C

16 Series — Tool Shank Dia.

Inch to Metric (mm) → Inch × 25.4
Metric (mm) to Inch → Metric ÷ 25.4 or Metric × 0.03937

Special / Custom Sizes on request

MEMO

MTA

Morse Taper Holder

※ AHO Retention Stud is required.

● For Morse taper shank with tang.

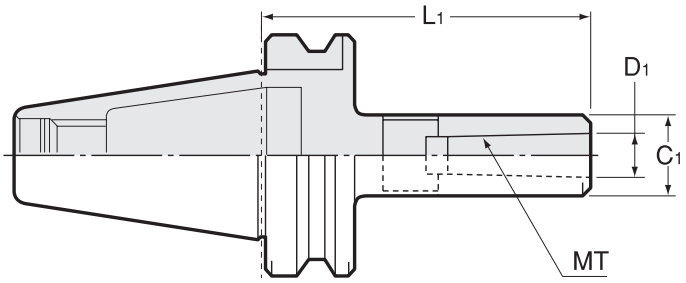

⚠ • Our two-face contact NBT spindle is incompatible with BT two-face contact spindle (for WBT-AHO). Please refer to P. 41.
• When AHO is used with center through coolant feeding, a designated retention stud (with coolant pipe) for AHO must be used.

Metric Sizes

Unit : Metric

Code	Model			MT	L1	D1	C1
3770 ※ 0010000	**NBT-AHO30 or WBT-AHO30**	**-MTA1**	**-105**	1	105	12.065	25
3770 ※ 0020000	**NBT-AHO30 or WBT-AHO30**	**-MTA2**	**-120**	2	120	17.780	32
3770 ※ 0030000	**NBT-AHO30 or WBT-AHO30**	**-MTA3**	**-135**	3	135	23.825	40
3770 ※ 0040000	**NBT-AHO40 or WBT-AHO40**	**-MTA1**	**-120**	1	120	12.065	25
3770 ※ 0050000	**NBT-AHO40 or WBT-AHO40**	**-MTA2**	**-120**	2	120	17.780	32
3770 ※ 0060000	**NBT-AHO40 or WBT-AHO40**	**-MTA3**	**-135**	3	135	23.825	40
3770 ※ 0070000	**NBT-AHO40 or WBT-AHO40**	**-MTA4**	**-165**	4	165	31.267	50
3770 ※ 0080000	**NBT-AHO50 or WBT-AHO50**	**-MTA1**	**-120**	1	120	12.065	25
3770 ※ 0090000			**-180**	1	180	12.065	25
3770 ※ 0100000	**NBT-AHO50 or WBT-AHO50**	**-MTA2**	**-135**	2	135	17.780	32
3770 ※ 0110000			**-180**	2	180	17.780	32
3770 ※ 0120000	**NBT-AHO50 or WBT-AHO50**	**-MTA3**	**-150**	3	150	23.825	40
3770 ※ 0130000			**-180**	3	180	23.825	40
3770 ※ 0140000	**NBT-AHO50 or WBT-AHO50**	**-MTA4**	**-180**	4	180	31.267	50
3770 ※ 0150000	**NBT-AHO50 or WBT-AHO50**	**-MTA5**	**-210**	5	210	44.399	65

Please replace ※ in the code with 0 for NBT-AHO and 6 for WBT-AHO.

Ordering Example

Corresponding to our two-face contact BT spindle

NBT-AHO40 - **MTA1** - **120**
Shank size | MT1 | Projection length (L)

Ordering Example

Corresponding to BT two-face contact spindle

WBT-AHO40 - **MTA1** - **120**
Shank size | MT1 | Projection length (L)

Inch to Metric (mm) → Inch × 25.4
Metric (mm) to Inch → Metric ÷ 25.4 or Metric × 0.03937

Special / Custom Sizes on request

SL2

Side Lock Holder

※ AHO Retention Stud is required.

● For JIS straight shank endmill with flat.

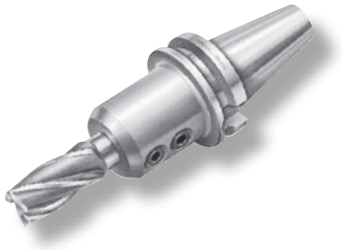

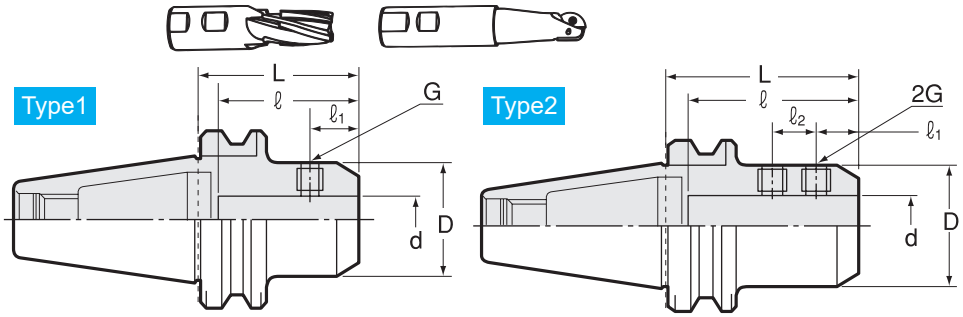

⚠ • Our two-face contact NBT spindle is incompatible with BT two-face contact spindle (for WBT-AHO). Please refer to P. 41.
• When AHO is used with center through coolant feeding, a designated retention stud (with coolant pipe) for AHO must be used.

Metric Sizes

Unit : Metric

Code	Model				Type	d (H6)	D	L	ℓ1	ℓ2	ℓ	G
3760 ※ 0010000	**NBT-AHO30 or WBT-AHO30**	**-SL2**	**-6**	**-60**	1	6	25	60	18	—	36	M6
3760 ※ 0020000			**-8**	**-60**	1	8	28	60	18	—	36	M8
3760 ※ 0030000			**-10**	**-60**	1	10	35	60	20	—	40	M10
3760 ※ 0040000			**-12**	**-75**	1	12	42	75	22.5	—	45	M12
3760 ※ 0050000			**-16**	**-90**	1	16	48	90	24	—	48	M14
3760 ※ 0060000			**-20**	**-90**	1	20	52	90	25	—	50	M16
3760 ※ 0070000	**NBT-AHO40 or WBT-AHO40**	**-SL2**	**-6**	**-75**	1	6	25	75	18	—	36	M6
3760 ※ 0080000			**-8**	**-75**	1	8	28	75	18	—	36	M8
3760 ※ 0090000			**-10**	**-75**	1	10	35	75	20	—	40	M10
3760 ※ 0100000			**-12**	**-75**	1	12	42	75	22.5	—	45	M12
3760 ※ 0110000			**-16**	**-75**	1	16	48	75	24	—	48	M14
3760 ※ 0120000			**-20**	**-75**	1	20	52	75	25	—	50	M16
3760 ※ 0130000			**-25**	**-90**	2	25	65	90	24	25	56	M18
3760 ※ 0140000			**-32**	**-120**	2	32	72	120	24	28	60	M20
3760 ※ 0150000	**NBT-AHO50 or WBT-AHO50**	**-SL2**	**-6**	**-90**	1	6	25	90	18	—	36	M6
3760 ※ 0160000			**-8**	**-90**	1	8	28	90	18	—	36	M8
3760 ※ 0170000			**-10**	**-90**	1	10	35	90	20	—	40	M10
3760 ※ 0180000			**-12**	**-90**	1	12	42	90	22.5	—	45	M12
3760 ※ 0190000			**-16**	**-90**	1	16	48	90	24	—	48	M14
3760 ※ 0200000			**-20**	**-90**	1	20	52	90	25	—	50	M16
3760 ※ 0210000			**-25**	**-105**	2	25	65	105	24	25	56	M18
3760 ※ 0220000			**-32**	**-120**	2	32	72	120	24	28	60	M20
3760 ※ 0230000			**-40**	**-120**	2	40	80	120	30	32	70	M20
3760 ※ 0240000			**-42**	**-120**	2	42	82	120	30	32	70	M20

Please replace ※ in the code with 0 for NBT-AHO and 6 for WBT-AHO.

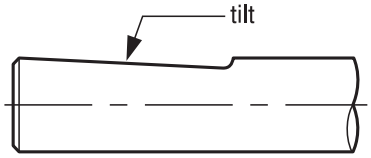

Please contact NT if the cutting tool has tilted flat on the shank.
Special tool holder that matches to the tilted flat can be manufactured.

Ordering Example

Corresponding to our two-face contact BT spindle

NBT-AHO40 - SL2 - 6 - 75

Shank size | I.D. (d) | Projection length (L)

Ordering Example

Corresponding to BT two-face contact spindle

WBT-AHO40 - SL2 - 6 - 75

Shank size | I.D. (d) | Projection length (L)

FMH

Face Mill Arbor (For Cutters With Oil Hole)

※ AHO Retention Stud is required.

● Coolant flows from the end face of centering location to cutter with oil hole.

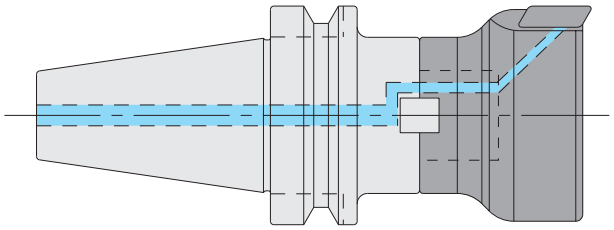

Type1

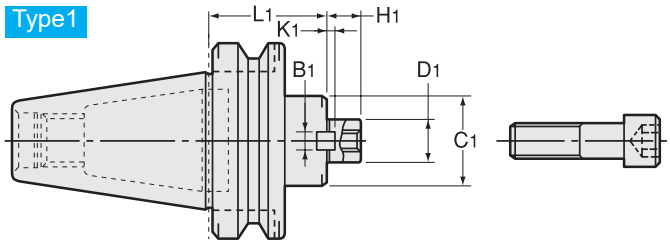

Type2

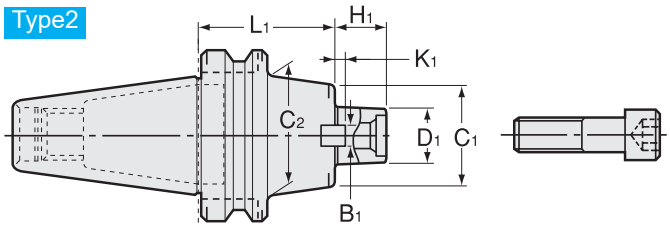

Type3

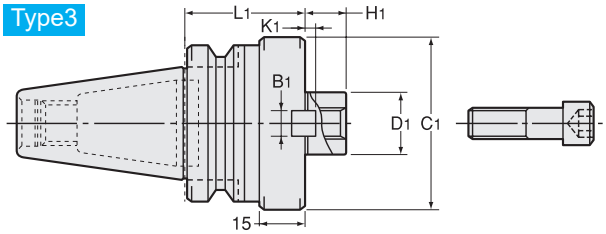

Type4

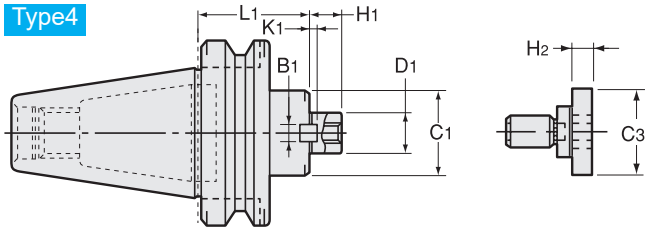

Type5

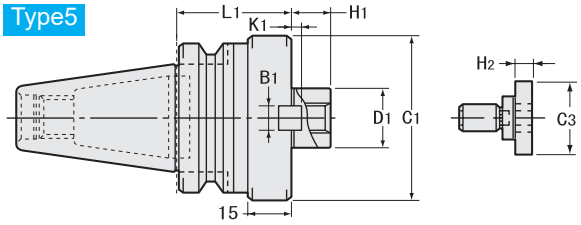

⚠ • Our two-face contact NBT spindle is incompatible with BT two-face contact spindle (for WBT-AHO). Please refer to P. 41.
• When AHO is used with center through coolant feeding, a designated retention stud (with coolant pipe) for AHO must be used.

Metric Sizes

Unit : Metric

Code	Model	Type	D1	L1	C1	C2	H1	B1	K1	C3	H2	Clamp Bolt	Cutter dia. example
3810 ※ 3010000	NBT-AHO30 or WBT-AHO30 -FMH16 -45	1	16	45	34	—	17	8	5	—	—	M8	40 50
3810 ※ 3020000	-60	1	16	60	34	—	17	8	5	—	—		
3810 ※ 3030000	NBT-AHO30 or WBT-AHO30 -FMH22 -45	1	22	45	45	—	18	10	5.6	—	—	M10	50 63
3810 ※ 3040000	-60	1	22	60	45	—	18	10	5.6	—	—		
3810 ※ 3050000	NBT-AHO30 or WBT-AHO30 -FMH25.4 -60	3	25.4	60	70	—	22	9.5	5	—	—	M12	80 100 125
3810 ※ 3060000	NBT-AHO40 or WBT-AHO40 -FMH16 -45	1	16	45	34	—	17	8	5	—	—	M8	40 50
3810 ※ 3070000	-60	1	16	60	34	—	17	8	5	—	—		
3810 ※ 3080000	-75	1	16	75	34	—	17	8	5	—	—		
3810 ※ 3090000	-90	2	16	90	34	40	17	8	5	—	—		
3810 ※ 3100000	NBT-AHO40 or WBT-AHO40 -FMH22 -45	1	22	45	45	—	18	10	5.6	—	—	M10	50 63
3810 ※ 3110000	-60	1	22	60	45	—	18	10	5.6	—	—		
3810 ※ 3120000	-75	1	22	75	45	—	18	10	5.6	—	—		
3810 ※ 3130000	-90	1	22	90	45	—	18	10	5.6	—	—		
3810 ※ 3140000	NBT-AHO40 or WBT-AHO40 -FMH25.4 -60	3	25.4	60	70	—	22	9.5	5	—	—	M12	80 100 125
3810 ※ 3150000	-75	3	25.4	75	70	—	22	9.5	5	—	—		
3810 ※ 3160000	-90	3	25.4	90	70	—	22	9.5	5	—	—		

Inch to Metric (mm) → Inch × 25.4
Metric (mm) to Inch → Metric ÷ 25.4 or Metric × 0.03937

Special / Custom Sizes on request

Metric Sizes

Unit : Metric

Code	Model	Type	D1	L1	C1	C2	H1	B1	K1	C3	H2	Clamp Bolt	Cutter dia. example
3810 ※ 3170000	NBT-AHO40 or WBT-AHO40 -FMH31.75-60	3	31.75	60	80	—	30	12.7	7	—	—	M16	80 100
3810 ※ 3180000	-75	3	31.75	75	80	—	30	12.7	7	—	—		
3810 ※ 3190000	-90	3	31.75	90	80	—	30	12.7	7	—	—		
3810 ※ 3200000	NBT-AHO40 or WBT-AHO40 -FMH38.1-60	5	38.1	60	90	—	34	15.9	9	50	14	MBAH-M20	125
3810 ※ 3210000	-75	5	38.1	75	90	—	34	15.9	9	50	14		
3810 ※ 3220000	-90	5	38.1	90	90	—	34	15.9	9	50	14		
3810 ※ 3230000	NBT-AHO50 or WBT-AHO50 -FMH16 -45	1	16	45	34	—	17	8	5	—	—	M8	40 50
3810 ※ 3240000	-90	2	16	90	34	40	17	8	5	—	—		
3810 ※ 3250000	-150	2	16	150	34	40	17	8	5	—	—		
3810 ※ 3260000	-200	2	16	200	34	40	17	8	5	—	—		
3810 ※ 3270000	NBT-AHO50 or WBT-AHO50 -FMH22 -45	1	22	45	45	—	18	10	5.6	—	—	M10	50 63
3810 ※ 3280000	-90	1	22	90	45	—	18	10	5.6	—	—		
3810 ※ 3290000	-150	1	22	150	45	—	18	10	5.6	—	—		
3810 ※ 3300000	-200	1	22	200	45	—	18	10	5.6	—	—		
3810 ※ 3310000	NBT-AHO50 or WBT-AHO50 -FMH25.4-45	1	25.4	45	70	—	22	9.5	5	—	—	M12	80 100 125
3810 ※ 3320000	-90	2	25.4	90	70	80	22	9.5	5	—	—		
3810 ※ 3330000	-150	2	25.4	150	70	80	22	9.5	5	—	—		
3810 ※ 3340000	-200	2	25.4	200	70	80	22	9.5	5	—	—		
3810 ※ 3350000	NBT-AHO50 or WBT-AHO50 -FMH31.75-45	1	31.75	45	80	—	30	12.7	7	—	—	M16	80 100
3810 ※ 3360000	-105	1	31.75	105	80	—	30	12.7	7	—	—		
3810 ※ 3370000	-150	1	31.75	150	80	—	30	12.7	7	—	—		
3810 ※ 3380000	-200	1	31.75	200	80	—	30	12.7	7	—	—		
3810 ※ 3390000	NBT-AHO50 or WBT-AHO50 -FMH38.1-45	4	38.1	45	90	—	34	15.9	9	50	14	MBAH-M20	125
3810 ※ 3400000	-75	4	38.1	75	90	—	34	15.9	9	50	14		
3810 ※ 3410000	-105	4	38.1	105	90	—	34	15.9	9	50	14		
3810 ※ 3420000	-150	4	38.1	150	90	—	34	15.9	9	50	14		
3810 ※ 3430000	NBT-AHO50 or WBT-AHO50 -FMH50.8-45	4	50.8	45	100	—	36	19.05	10	65	14	MBAH-M24	160
3810 ※ 3440000	-75	4	50.8	75	100	—	36	19.05	10	65	14		
3810 ※ 3450000	-105	4	50.8	105	100	—	36	19.05	10	65	14		
3810 ※ 3460000	-150	4	50.8	150	100	—	36	19.05	10	65	14		

Please replace ※ in the code with 0 for NBT-AHO and 6 for WBT-AHO.

Clamp bolt is Included.

Ordering Example

Corresponding to our two-face contact BT spindle

NBT-AHO40 - FMH 25.4 - 60

Shank size | D1 | Projection length (L)

Ordering Example

Corresponding to BT two-face contact spindle

WBT-AHO40 - FMH 25.4 - 60

Shank size | D1 | Projection length (L)

FMA

Face Mill Arbor

※ AHO Retention Stud is required.

● For JIS B4113 face mill.

Type1

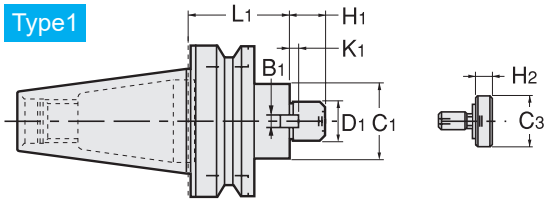

Type2

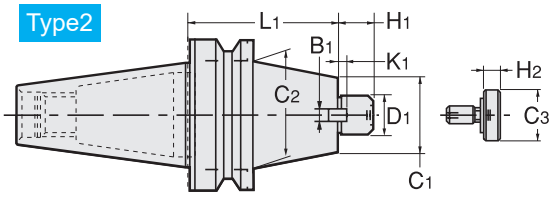

Type3

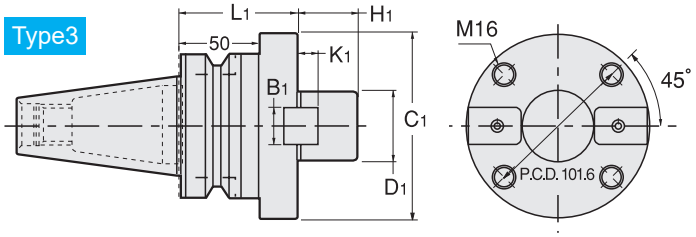

Type4

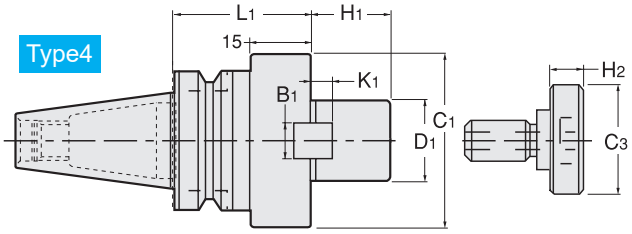

⚠ • Our two-face contact NBT spindle is incompatible with BT two-face contact spindle (for WBT-AHO). Please refer to P. 41.
• When AHO is used with center through coolant feeding, a designated retention stud (with coolant pipe) for AHO must be used.

Metric Sizes

Unit : Metric

Code	Model	Type	D1	L1	C1	C2	H1	B1	K1	C3	H2	kg	Clamp Bolt	Cutter dia. example
3810 ※ 0350000	NBT-AHO30 or WBT-AHO30 -FMA22.225-45	1	22.225	45	42	—	18	8	4	—	—		M10	50
3810 ※ 0360000	-60	1	22.225	60	42	—	18	8	4	—	—	0.8		
3810 ※ 0260000	-FMA25.4 -45	4	25.4	45	50	—	22	9.5	5	33	10	0.8	MBA-M12	76
3810 ※ 0250000	-60	4	25.4	60	50	—	22	9.5	5	33	10	1.0		
3810 ※ 0010000	NBT-AHO40 or WBT-AHO40 -FMA25.4 -45	1	25.4	45	50	—	22	9.5	5	33	10		MBA-M12	76
3810 ※ 0370000	-60	1	25.4	60	50	—	22	9.5	5	33	10			
3810 ※ 0380000	-75	1	25.4	75	50	—	22	9.5	5	33	10			
3810 ※ 0020000	-90	1	25.4	90	50	—	22	9.5	5	33	10			
3810 ※ 0030000	-FMA31.75-45	1	31.75	45	60	—	30	12.7	7	40	10		MBA-M16	102
3810 ※ 0390000	-60	1	31.75	60	60	—	30	12.7	7	40	10			
3810 ※ 0040000	-75	1	31.75	75	60	—	30	12.7	7	40	10	2.1		
3810 ※ 0400000	-90	1	31.75	90	60	—	30	12.7	7	40	10			
3810 ※ 0050000	-FMA38.1 -60	4	38.1	60	80	—	34	15.9	9	50	14		MBA-M20	127
3810 ※ 0410000	-75	4	38.1	75	80	—	34	15.9	9	50	14			
3810 ※ 0420000	-90	4	38.1	90	80	—	34	15.9	9	50	14			
3810 ※ 0060000	NBT-AHO50 or WBT-AHO50 -FMA25.4 -45	1	25.4	45	50	—	22	9.5	5	33	10		MBA-M12	76
3810 ※ 0070000	-90	2	25.4	90	50	70	22	9.5	5	33	10			
3810 ※ 0080000	-150	2	25.4	150	50	70	22	9.5	5	33	10			
3810 ※ 0090000	-200	2	25.4	200	50	70	22	9.5	5	33	10	6.5		
3810 ※ 0430000	-250 *	2	25.4	250	50	70	22	9.5	5	33	10			
3810 ※ 0440000	-300 *	2	25.4	300	50	70	22	9.5	5	33	10			
3810 ※ 0100000	NBT-AHO50 or WBT-AHO50 -FMA31.75-45	1	31.75	45	60	—	30	12.7	7	40	10		MBA-M16	102
3810 ※ 0120000	-105	2	31.75	105	60	70	30	12.7	7	40	10	4.8		
3810 ※ 0130000	-150	2	31.75	150	60	70	30	12.7	7	40	10			
3810 ※ 0140000	-200	2	31.75	200	60	90	30	12.7	7	40	10	7.8		
3810 ※ 0150000	-250 *	2	31.75	250	60	90	30	12.7	7	40	10			
3810 ※ 0450000	-300 *	2	31.75	300	60	90	30	12.7	7	40	10	10.8		

Inch to Metric (mm) → Inch × 25.4
Metric (mm) to Inch → Metric ÷ 25.4 or Metric × 0.03937

Special / Custom Sizes on request

Metric Sizes

Unit : Metric

Code	Model	Type	D1	L1	C1	C2	H1	B1	K1	C3	H2	kg	Clamp Bolt	Cutter dia. example
3810 ※ 0160000	NBT-AHO50 or WBT-AHO50 -FMA38.1 -45	1	38.1	45	80	—	34	15.9	9	50	14		MBA-M20	127
3810 ※ 0170000	-75	1	38.1	75	80	—	34	15.9	9	50	14			
3810 ※ 0180000	-105	1	38.1	105	80	—	34	15.9	9	50	14			
3810 ※ 0190000	-150	1	38.1	150	80	—	34	15.9	9	50	14			
3810 ※ 0200000	NBT-AHO50 or WBT-AHO50 -FMA50.8 -45	1	50.8	45	100	—	36	19.05	10	65	14		MBA-M24	152 178
3810 ※ 0210000	-75	1	50.8	75	100	—	36	19.05	10	65	14	5.8		
3810 ※ 0220000	-105	1	50.8	105	100	—	36	19.05	10	65	14			
3810 ※ 0230000	-150	1	50.8	150	100	—	36	19.05	10	65	14			
3810 ※ 0240000	-FMA47.625-75 ＊	3	47.625	75	128.57	—	38	25.4	12.5	—	—	6.9	M16	203

Please replace ※ in the code with 0 for NBT-AHO and 6 for WBT-AHO.

Models with ＊ are not center through coolant feed compliant.
Clamp bolt is Included.

Ordering Example

Corresponding to our two-face contact BT spindle

NBT-AHO40 - FMA 25.4 - 60

Shank size | D1 | Projection length (L)

Ordering Example

Corresponding to BT two-face contact spindle

WBT-AHO40 - FMA 25.4 - 60

Shank size | D1 | Projection length (L)

FMB

Face Mill Arbor

※ AHO Retention Stud is required.

Type1

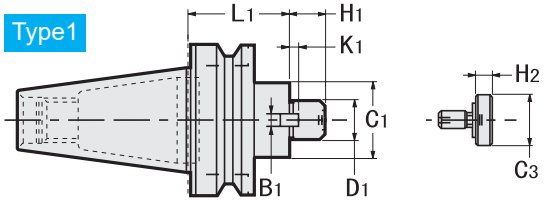

Type2

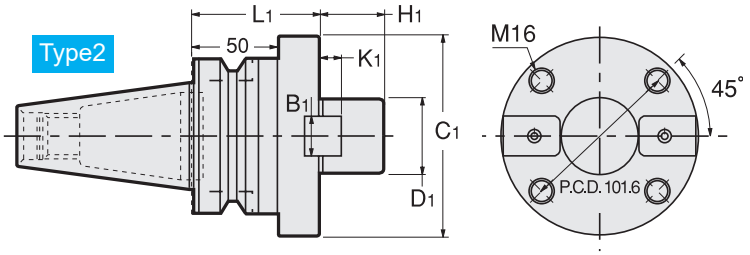

Type3

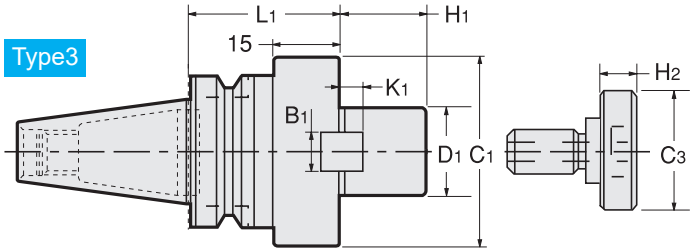

⚠
- Our two-face contact NBT spindle is incompatible with BT two-face contact spindle (for WBT-AHO). Please refer to P. 41.
- When AHO is used with center through coolant feeding, a designated retention stud (with coolant pipe) for AHO must be used.

Inch Sizes

Unit : Metric

Code	Model	Type	D1	L1	C1	H1	B1	K1	C3	H2	Clamp Bolt	Cutter dia. example
3810 ※ 1130000	NBT-AHO30 or WBT-AHO30 -FMB25.4 -45	3	25.4	45	80	26	9.5	5	33	10	MBA-M12	80
3810 ※ 1140000	-60	3	25.4	60	80	26	9.5	5	33	10		
3810 ※ 1150000	NBT-AHO40 or WBT-AHO40 -FMB25.4 -60	3	25.4	60	80	26	9.5	5	33	10	MBA-M12	80
3810 ※ 1160000	-90	3	25.4	90	80	26	9.5	5	33	10		
3810 ※ 1170000	NBT-AHO40 or WBT-AHO40 -FMB38.1 -60	3	38.1	60	85	26	15.9	9	50	14	MBA-M20	100 125
3810 ※ 1180000	NBT-AHO50 or WBT-AHO50 -FMB25.4 -45	1	25.4	45	80	26	9.5	5	33	10	MBA-M12	80
3810 ※ 1190000	-90	1	25.4	90	80	26	9.5	5	33	10		
3810 ※ 1200000	-150	1	25.4	150	80	26	9.5	5	33	10		
3810 ※ 1210000	NBT-AHO50 or WBT-AHO50 -FMB38.1 -45	1	38.1	45	85	26	15.9	9	50	14	MBA-M20	100 125
3810 ※ 1220000	-75	1	38.1	75	85	26	15.9	9	50	14		
3810 ※ 1230000	-105	1	38.1	105	85	26	15.9	9	50	14		

Clamp bolt is Included.

Inch to Metric (mm) → Inch × 25.4
Metric (mm) to Inch → Metric ÷ 25.4 or Metric × 0.03937

Special / Custom Sizes on request

Metric Sizes

Unit : Metric

Code	Model	Type	D1	L1	C1	H1	B1	K1	C3	H2	kg	Clamp Bolt	Cutter dia. example
3810 ※ 1010000	NBT-AHO30 or WBT-AHO30 -FMB27 -45	3	27	45	80	26	12	6	33	10		MBA-M12	80
3810 ※ 1020000	-60	3	27	60	80	26	12	6	33	10			
3810 ※ 1030000	NBT-AHO40 or WBT-AHO40 -FMB27 -60	3	27	60	80	26	12	6	33	10		MBA-M12	80
3810 ※ 1040000	-90	3	27	90	80	26	12	6	33	10	2.7		
3810 ※ 1050000	NBT-AHO40 or WBT-AHO40 -FMB40 -60	3	40	60	85	26	16	8.5	50	14		MBA-M20	100 125
3810 ※ 1060000	NBT-AHO50 or WBT-AHO50 -FMB27 -45	1	27	45	80	26	12	6	33	10		MBA-M12	80
3810 ※ 1070000	-90	1	27	90	80	26	12	6	33	10			
3810 ※ 1080000	-150	1	27	150	80	26	12	6	33	10			
3810 ※ 1090000	NBT-AHO50 or WBT-AHO50 -FMB40 -45	1	40	45	85	26	16	8.5	50	14		MBA-M20	100 125
3810 ※ 1100000	-75	1	40	75	85	26	16	8.5	50	14			
3810 ※ 1110000	-105	1	40	105	85	26	16	8.5	50	14			
3810 ※ 1120000	NBT-AHO50 or WBT-AHO50 -FMB60 -75 ＊	2	60	75	140	25	25.4	12.5	—	—	7.2	M16	200

Please replace ※ in the code with 0 for NBT-AHO and 6 for WBT-AHO.

Models with ＊ are not center through coolant feed compliant

Clamp bolt is Included.

Ordering Example

Corresponding to our two-face contact BT spindle

NBT-AHO40 - FMB 25.4 - 60

Shank size / D1 / Projection length (L)

Ordering Example

Corresponding to BT two-face contact spindle

WBT-AHO40 - FMB 25.4 - 60

Shank size / D1 / Projection length (L)

FMC

Face Mill Arbor

※ AHO Retention Stud is required.

Type1

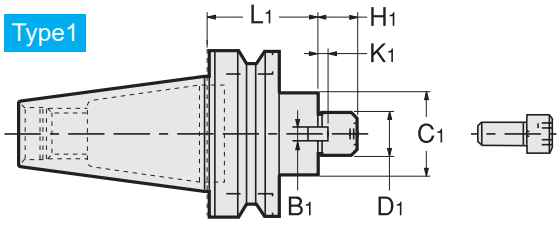

Type2

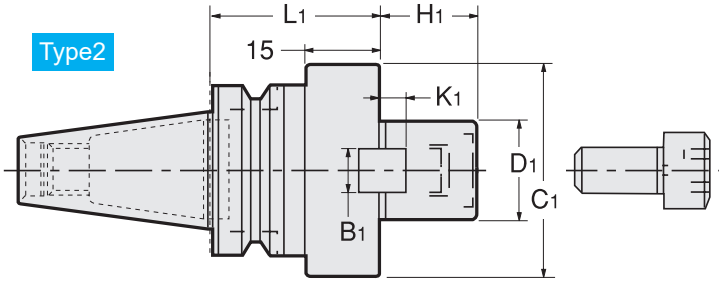

- Our two-face contact NBT spindle is incompatible with BT two-face contact spindle (for WBT-AHO). Please refer to P. 41.
- When AHO is used with center through coolant feeding, a designated retention stud (with coolant pipe) for AHO must be used.

Inch Sizes

Unit : Metric

Code	Model	Type	D1	L1	C1	H1	B1	K1	kg	Clamp Bolt	Cutter dia. example
3810 ※ 2300000	NBT-AHO30 or WBT-AHO30 FMC25.4 -45	2	25.4	45	70	20	9.5	5		M12	80
3810 ※ 2310000	-60	2	25.4	60	70	20	9.5	5			
3810 ※ 2320000	NBT-AHO40 or WBT-AHO40 FMC25.4 -60	2	25.4	60	70	20	9.5	5	1.8	M12	80
3810 ※ 2330000	-90	2	25.4	90	70	20	9.5	5			
3810 ※ 2340000	NBT-AHO40 or WBT-AHO40 FMC38.1 -60	2	38.1	60	85	22	15.9	7		M16	100
3810 ※ 2350000	-75	2	38.1	75	85	22	15.9	7			
3810 ※ 2360000	NBT-AHO50 or WBT-AHO50 FMC25.4 -45	1	25.4	45	70	20	9.5	5		M12	80
3810 ※ 2370000	-90	1	25.4	90	70	20	9.5	5			
3810 ※ 2380000	-150	1	25.4	150	70	20	9.5	5			
3810 ※ 2390000	NBT-AHO50 or WBT-AHO50 FMC38.1 -45	1	38.1	45	85	22	15.9	7		M16	100
3810 ※ 2400000	-75	1	38.1	75	85	22	15.9	7			
3810 ※ 2410000	-105	1	38.1	105	85	22	15.9	7			

Clamp bolt is Included.

Inch to Metric (mm) → Inch × 25.4
Metric (mm) to Inch → Metric ÷ 25.4 or Metric × 0.03937

Special / Custom Sizes on request

Metric Sizes

Unit : Metric

Code	Model		Type	D1	L1	C1	H1	B1	K1	kg	Clamp Bolt	Cutter dia. example
3810 ※ 2010000	NBT-AHO30 or WBT-AHO30	-FMC22 -45	1	22	45	45	18	10	5	0.7	M10	50 63
3810 ※ 2020000		-60	1	22	60	45	18	10	5			
3810 ※ 2030000	NBT-AHO40 or WBT-AHO40	-FMC22 -45	1	22	45	45	18	10	5	1.1	M10	50 63
3810 ※ 2040000		-60	1	22	60	45	18	10	5			
3810 ※ 2050000		-75	1	22	75	45	18	10	5			
3810 ※ 2060000		-90	1	22	90	45	18	10	5	1.7		
3810 ※ 2080000	NBT-AHO40 or WBT-AHO40	-FMC27 -60	2	27	60	70	20	12	6		M12	80
3810 ※ 2090000		-75	2	27	75	70	20	12	6			
3810 ※ 2100000		-90	2	27	90	70	20	12	6			
3810 ※ 2110000	NBT-AHO40 or WBT-AHO40	-FMC32 -60	2	32	60	85	22	14	7		M16	100
3810 ※ 2120000		-75	2	32	75	85	22	14	7			
3810 ※ 2130000		-90	2	32	90	85	22	14	7			
3810 ※ 2140000	NBT-AHO50 or WBT-AHO50	-FMC22 -45	1	22	45	45	18	10	5		M10	50 63
3810 ※ 2150000		-90	1	22	90	45	18	10	5			
3810 ※ 2160000		-150	1	22	150	45	18	10	5			
3810 ※ 2170000		-200	1	22	200	45	18	10	5			
3810 ※ 2180000		-250 *	1	22	250	45	18	10	5			
3810 ※ 2190000		-300 *	1	22	300	45	18	10	5			
3810 ※ 2200000	NBT-AHO50 or WBT-AHO50	-FMC27 -45	1	27	45	70	20	12	6		M12	80
3810 ※ 2210000		-105	1	27	105	70	20	12	6			
3810 ※ 2220000		-150	1	27	150	70	20	12	6			
3810 ※ 2230000		-200	1	27	200	70	20	12	6			
3810 ※ 2240000		-250 *	1	27	250	70	20	12	6			
3810 ※ 2250000		-300 *	1	27	300	70	20	12	6			
3810 ※ 2260000	NBT-AHO50 or WBT-AHO50	-FMC32 -45	1	32	45	85	22	14	7		M16	100
3810 ※ 2270000		-75	1	32	75	85	22	14	7			
3810 ※ 2280000		-105	1	32	105	85	22	14	7			
3810 ※ 2290000		-150	1	32	150	85	22	14	7			

Please replace ※ in the code with 0 for NBT-AHO and 6 for WBT-AHO.

Models with * are not center through coolant feed compliant
Clamp bolt is Included.

Ordering Example

Corresponding to our two-face contact BT spindle

NBT-AHO40 - FMC 25.4 - 60

Shank size | D1 | Projection length (L)

Ordering Example

Corresponding to BT two-face contact spindle

WBT-AHO40 - FMC 25.4 - 60

Shank size | D1 | Projection length (L)

SCA

Side Cutter Arbor

※ AHO Retention Stud is required.

● For JIS side cutter and metal saw.

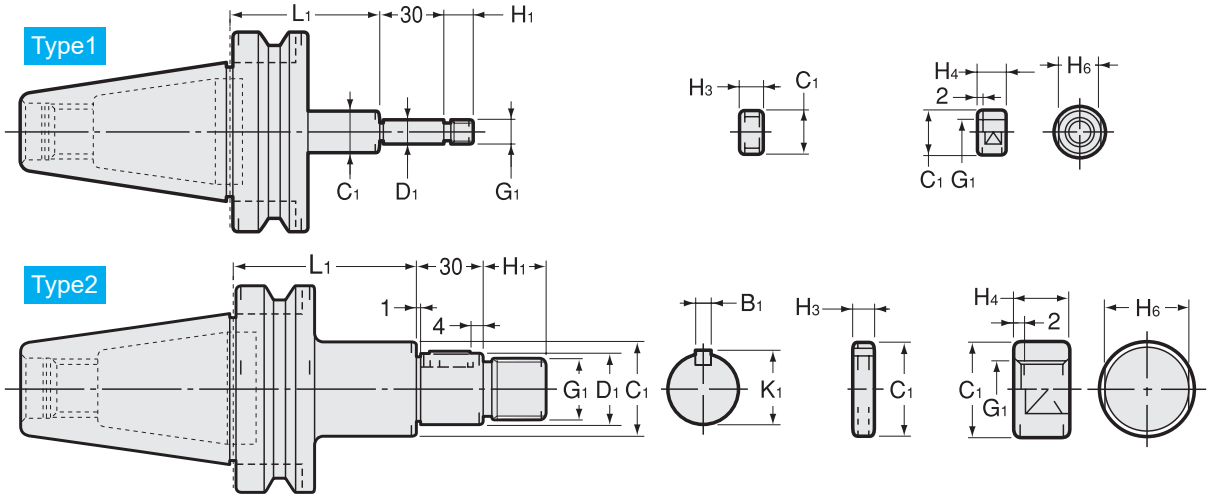

⚠ • Our two-face contact NBT spindle is incompatible with BT two-face contact spindle (for WBT-AHO). Please refer to P. 41.
• When AHO is used with center through coolant feeding, a designated retention stud (with coolant pipe) for AHO must be used.

Inch Sizes

Unit : Metric

Code	Model	Type	D1 (h6)	L1	C1	G1	H1	B1	K1	H3	H4	H6	Cutter dia. Example
3780 ※ 0250000	NBT-AHO30 or WBT-AHO30 -SCA12.7 -75	1	12.7	75	20	M12 × 1.25	15	—	—	3,5,7,8,10,12	12	17	50
3780 ※ 0260000	NBT-AHO30 or WBT-AHO30 -SCA15.875-75	2	15.875	75	26	M14 × 1.5	16	3.18	17.42	3,5,7,8,10,12	13	22	50 ~ 63
3780 ※ 0270000	NBT-AHO30 or WBT-AHO30 -SCA22.225-75	2	22.225	75	34	M20 × 1.5	21	3.18	23.82	3,5,7,8,10,12	18	30	60 ~ 63
3780 ※ 0280000	NBT-AHO40 or WBT-AHO40 -SCA12.7 -60	1	12.7	60	20	M12 × 1.25	15	—	—	3,5,7,8,10,12	12	17	50
3780 ※ 0290000	-90	1	12.7	90	20	M12 × 1.25	15	—	—	3,5,7,8,10,12	12	17	50
3780 ※ 0300000	NBT-AHO40 or WBT-AHO40 -SCA15.875-75	2	15.875	75	26	M14 × 1.5	16	3.18	17.42	3,5,7,8,10,12	13	22	50 ~ 63
3780 ※ 0310000	-105	2	15.875	105	26	M14 × 1.5	16	3.18	17.42	3,5,7,8,10,12	13	22	50 ~ 63
3780 ※ 0320000	NBT-AHO40 or WBT-AHO40 -SCA22.225-75	2	22.225	75	34	M20 × 1.5	21	3.18	23.82	3,5,7,8,10,12	18	30	60 ~ 63
3780 ※ 0330000	-120	2	22.225	120	34	M20 × 1.5	21	3.18	23.82	3,5,7,8,10,12	18	30	60 ~ 63
3780 ※ 0340000	NBT-AHO40 or WBT-AHO40 -SCA25.4 -75	2	25.4	75	40	M24 × 2	25	6.35	27.78	3,5,7,8,10,12	21	32	75 ~ 125
3780 ※ 0350000	-120	2	25.4	120	40	M24 × 2	25	6.35	27.78	3,5,7,8,10,12	21	32	75 ~ 125
3780 ※ 0360000	NBT-AHO40 or WBT-AHO40 -SCA31.75 -90	2	31.75	90	46	M30 × 2	30	7.92	34.92	3,5,7,8,10,12	26	41	100 ~ 250
3780 ※ 0370000	NBT-AHO50 or WBT-AHO50 -SCA12.7 -75	1	12.7	75	20	M12 × 1.25	15	—	—	3,5,7,8,10,12	12	17	50
3780 ※ 0380000	-105	1	12.7	105	20	M12 × 1.25	15	—	—	3,5,7,8,10,12	12	17	50
3780 ※ 0390000	NBT-AHO50 or WBT-AHO50 -SCA15.875-90	2	15.875	90	26	M14 × 1.5	16	3.18	17.42	3,5,7,8,10,12	13	22	50 ~ 63
3780 ※ 0400000	-120	2	15.875	120	26	M14 × 1.5	16	3.18	17.42	3,5,7,8,10,12	13	22	50 ~ 63
3780 ※ 0410000	NBT-AHO50 or WBT-AHO50 -SCA22.225-90	2	22.225	90	34	M20 × 1.5	21	3.18	23.82	3,5,7,8,10,12	18	30	60 ~ 63
3780 ※ 0420000	-135	2	22.225	135	34	M20 × 1.5	21	3.18	23.82	3,5,7,8,10,12	18	30	60 ~ 63
3780 ※ 0430000	NBT-AHO50 or WBT-AHO50 -SCA25.4 -90	2	25.4	90	40	M24 × 2	25	6.35	27.78	3,5,7,8,10,12	21	32	75 ~ 125
3780 ※ 0440000	-135	2	25.4	135	40	M24 × 2	25	6.35	27.78	3,5,7,8,10,12	21	32	75 ~ 125
3780 ※ 0450000	NBT-AHO50 or WBT-AHO50 -SCA31.75 -90	2	31.75	90	46	M30 × 2	30	7.92	34.92	3,5,7,8,10,12	26	41	100 ~ 250
3780 ※ 0460000	-135	2	31.75	135	46	M30 × 2	30	7.92	34.92	3,5,7,8,10,12	26	41	100 ~ 250
3780 ※ 0470000	NBT-AHO50 or WBT-AHO50 -SCA38.1 -90	2	38.1	90	55	M36 × 3	36	9.52	42.06	3,5,7,8,10,12	31	46	150 ~ 315
3780 ※ 0480000	-135	2	38.1	135	55	M36 × 3	36	9.52	42.06	3,5,7,8,10,12	31	46	150 ~ 315

Inch to Metric (mm) → Inch × 25.4
Metric (mm) to Inch → Metric ÷ 25.4 or Metric × 0.03937

Special / Custom Sizes on request

Metric Sizes

Unit : Metric

Code	Model	Type	D1 (h6)	L1	C1	G1	H1	B1	K1	H3	H4	H6	Cutter dia. Example
3780 ※ 0010000	NBT-AHO30 or WBT-AHO30 -SCA13 -75	1	13	75	20	M12 × 1.25	15	—	—	3,5,7,8,10,12	12	17	50
3780 ※ 0020000	NBT-AHO30 or WBT-AHO30 -SCA16 -75	2	16	75	26	M14 × 1.5	16	4	17.2	3,5,7,8,10,12	13	22	50 ~ 63
3780 ※ 0030000	NBT-AHO30 or WBT-AHO30 -SCA22 -75	2	22	75	34	M20 × 1.5	21	6	23.6	3,5,7,8,10,12	18	30	60 ~ 125
3780 ※ 0040000	NBT-AHO40 or WBT-AHO40 -SCA13 -60	1	13	60	20	M12 × 1.25	15	—	—	3,5,7,8,10,12	12	17	50
3780 ※ 0050000	-90	1	13	90	20	M12 × 1.25	15	—	—	3,5,7,8,10,12	12	17	50
3780 ※ 0060000	NBT-AHO40 or WBT-AHO40 -SCA16 -75	2	16	75	26	M14 × 1.5	16	4	17.2	3,5,7,8,10,12	13	22	50 ~ 63
3780 ※ 0070000	-105	2	16	105	26	M14 × 1.5	16	4	17.2	3,5,7,8,10,12	13	22	50 ~ 63
3780 ※ 0080000	NBT-AHO40 or WBT-AHO40 -SCA22 -75	2	22	75	34	M20 × 1.5	21	6	23.6	3,5,7,8,10,12	18	30	60 ~ 125
3780 ※ 0090000	-120	2	22	120	34	M20 × 1.5	21	6	23.6	3,5,7,8,10,12	18	30	60 ~ 125
3780 ※ 0100000	NBT-AHO40 or WBT-AHO40 -SCA27 -75	2	27	75	40	M24 × 2	25	7	29	3,5,7,8,10,12	21	32	75 ~ 100
3780 ※ 0110000	-120	2	27	120	40	M24 × 2	25	7	29	3,5,7,8,10,12	21	32	75 ~ 100
3780 ※ 0120000	NBT-AHO40 or WBT-AHO40 -SCA32 -90	2	32	90	46	M30 × 2	30	8	34	3,5,7,8,10,12	26	41	100 ~ 250
3780 ※ 0130000	NBT-AHO50 or WBT-AHO50 -SCA13 -75	1	13	75	20	M12 × 1.25	15	—	—	3,5,7,8,10,12	12	17	50
3780 ※ 0140000	-105	1	13	105	20	M12 × 1.25	15	—	—	3,5,7,8,10,12	12	17	50
3780 ※ 0150000	NBT-AHO50 or WBT-AHO50 -SCA16 -90	2	16	90	26	M14 × 1.5	16	4	17.2	3,5,7,8,10,12	13	22	50 ~ 63
3780 ※ 0160000	-120	2	16	120	26	M14 × 1.5	16	4	17.2	3,5,7,8,10,12	13	22	50 ~ 63
3780 ※ 0170000	NBT-AHO50 or WBT-AHO50 -SCA22 -90	2	22	90	34	M20 × 1.5	21	6	23.6	3,5,7,8,10,12	18	30	60 ~ 125
3780 ※ 0180000	-135	2	22	135	34	M20 × 1.5	21	6	23.6	3,5,7,8,10,12	18	30	60 ~ 125
3780 ※ 0190000	NBT-AHO50 or WBT-AHO50 -SCA27 -90	2	27	90	40	M24 × 2	25	7	29	3,5,7,8,10,12	21	32	75 ~ 100
3780 ※ 0200000	-135	2	27	135	40	M24 × 2	25	7	29	3,5,7,8,10,12	21	32	75 ~ 100
3780 ※ 0210000	NBT-AHO50 or WBT-AHO50 -SCA32 -90	2	32	90	46	M30 × 2	30	8	34	3,5,7,8,10,12	26	41	100 ~ 250
3780 ※ 0220000	-135	2	32	135	46	M30 × 2	30	8	34	3,5,7,8,10,12	26	41	100 ~ 250
3780 ※ 0230000	NBT-AHO50 or WBT-AHO50 -SCA40 -90	2	40	90	55	M36 × 3	36	10	42.5	3,5,7,8,10,12	31	46	150 ~ 315
3780 ※ 0240000	-135	2	40	135	55	M36 × 3	36	10	42.5	3,5,7,8,10,12	31	46	150 ~ 315

Please replace ※ in the code with 0 for NBT-AHO and 6 for WBT-AHO.

One clamp nut and spacers (size 3, 5, 7, 8, 10, and 12 / one each) are included.

Ordering Example

Corresponding to our two-face contact BT spindle

NBT-AHO40 - SCA 12.7 - 75

Shank size | D1 | Projection length (L)

Ordering Example

Corresponding to BT two-face contact spindle

WBT-AHO40 - SCA 12.7 - 75

Shank size | D1 | Projection length (L)

Inch to Metric (mm) → Inch × 25.4
Metric (mm) to Inch → Metric ÷ 25.4 or Metric × 0.03937

Special / Custom Sizes on request

AH , AH-OH

90°

Angle Heads (Fixed Type)

※ **AHO Retention Stud is required.**

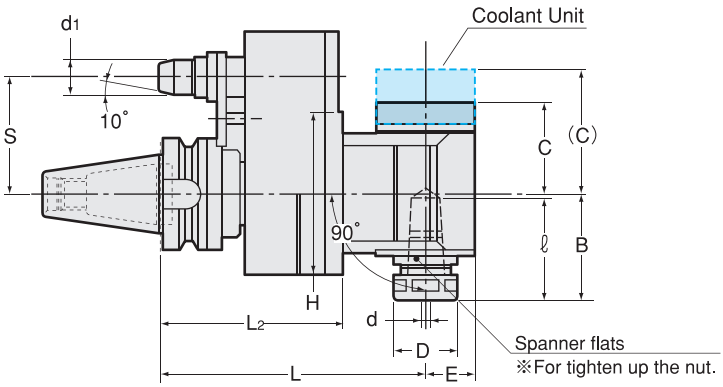

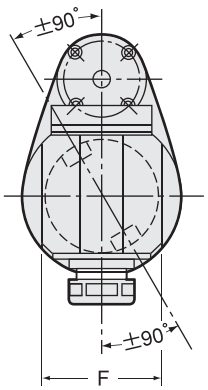



※ Requires a positioning block. Please refer to P.179-180.

- Our two-face contact NBT spindle is incompatible with BT two-face contact spindle (for WBT-AHO). Please refer to P. 41.
- When AHO is used with center through coolant feeding, a designated retention stud (with coolant pipe) for AHO must be used.

Unit : Metric

Code	Model			d	L	L2	ℓ	d1	D	B	C (C)	E	F	H	S
3790 ＊00100 ※※	NBT-AHO30 or WBT-AHO30	-AH0790	-120-50- ※※	0.5～7.0	120	75.3	40	13	23	42	33	17	45	78	50
3790 ＊00200 ※※	NBT-AHO30 or WBT-AHO30	-AH1290	-125-50- ※※	2.5～12.0	125	75.3	63.5	13	32	58	44.5	22	47	78	50
3790 ＊00300 ※※	NBT-AHO40 or WBT-AHO40	-AH0790 (-AH0790-OH)	-150-65- ※※	0.5～7.0	150	103	40	19.6	23	42	33 (46.5)	17	51	90	65
3790 ＊00400 ※※			-180-65- ※※	0.5～7.0	180	103	40	19.6	23	42	33 (46.5)	17	51	90	65
3790 ＊00500 ※※			-210-65- ※※	0.5～7.0	210	103	40	19.6	23	42	33 (46.5)	17	51	90	65
3790 ＊00600 ※※			-240-65- ※※	0.5～7.0	240	120	40	19.6	23	42	33 (46.5)	17	51	90	65
3790 ＊00700 ※※			-270-65- ※※	0.5～7.0	270	120	40	19.6	23	42	33 (46.5)	17	51	90	65
3790 ＊00800 ※※	NBT-AHO40 or WBT-AHO40	-AH0990 (-AH0990-OH)	-150-65- ※※	2.5～9.0	150	103	55	19.6	26.3	53.5	44.5 (58.5)	22	58	90	65
3790 ＊00900 ※※			-180-65- ※※	2.5～9.0	180	103	55	19.6	26.3	53.5	44.5 (58.5)	22	58	90	65
3790 ＊01000 ※※			-210-65- ※※	2.5～9.0	210	103	55	19.6	26.3	53.5	44.5 (58.5)	22	58	90	65
3790 ＊01100 ※※			-240-65- ※※	2.5～9.0	240	120	55	19.6	26.3	53.5	44.5 (58.5)	22	58	90	65
3790 ＊01200 ※※	NBT-AHO40 or WBT-AHO40	-AH1690 (-AH1690-OH)	-150-65- ※※	3.5～16.0	150	103	59	19.6	36.3	59	51 (64.5)	28	67	90	65
3790 ＊01300 ※※			-180-65- ※※	3.5～16.0	180	103	59	19.6	36.3	59	51 (64.5)	28	67	90	65
3790 ＊01400 ※※			-210-65- ※※	3.5～16.0	210	103	59	19.6	36.3	59	51 (64.5)	28	67	90	65
3790 ＊01500 ※※	NBT-AHO50 or WBT-AHO50	-AH0790 (-AH0790-OH)	-165-80- ※※	0.5～7.0	165	118	40	28	23	42	33 (46.5)	17	51	90	80
3790 ＊01600 ※※			-195-80- ※※	0.5～7.0	195	118	40	28	23	42	33 (46.5)	17	51	90	80
3790 ＊01700 ※※			-225-80- ※※	0.5～7.0	225	118	40	28	23	42	33 (46.5)	17	51	90	80
3790 ＊01800 ※※			-255-80- ※※	0.5～7.0	255	135	40	28	23	42	33 (46.5)	17	51	90	80
3790 ＊01900 ※※			-285-80- ※※	0.5～7.0	285	135	40	28	23	42	33 (46.5)	17	51	90	80
3790 ＊02000 ※※			-165-110- ※※	0.5～7.0	165	118	40	28	23	42	33 (46.5)	17	51	90	110
3790 ＊02100 ※※			-195-110- ※※	0.5～7.0	195	118	40	28	23	42	33 (46.5)	17	51	90	110
3790 ＊02200 ※※			-225-110- ※※	0.5～7.0	225	118	40	28	23	42	33 (46.5)	17	51	90	110
3790 ＊02300 ※※			-255-110- ※※	0.5～7.0	255	135	40	28	23	42	33 (46.5)	17	51	90	110
3790 ＊02400 ※※			-285-110- ※※	0.5～7.0	285	135	40	28	23	42	33 (46.5)	17	51	90	110

Inch to Metric (mm) → Inch × 25.4
Metric (mm) to Inch → Metric ÷ 25.4 or Metric × 0.03937

Special / Custom Sizes on request

Unit : Metric

Code	Model	d	L	L2	ℓ	d1	D	B	C (C)	E	F	H	S
3790 ＊02500 ※※	NBT-AHO50 or WBT-AHO50 -AH0990 (-AH0990-OH) -165-80- ※※	2.5～9.0	165	118	55	28	26.3	53.5	44.5 (58.5)	22	58	90	80
3790 ＊02600 ※※	-195-80- ※※	2.5～9.0	195	118	55	28	26.3	53.5	44.5 (58.5)	22	58	90	80
3790 ＊02700 ※※	-225-80- ※※	2.5～9.0	225	118	55	28	26.3	53.5	44.5 (58.5)	22	58	90	80
3790 ＊02800 ※※	-255-80- ※※	2.5～9.0	255	135	55	28	26.3	53.5	44.5 (58.5)	22	58	90	80
3790 ＊02900 ※※	-165-110- ※※	2.5～9.0	165	118	55	28	26.3	53.5	44.5 (58.5)	22	58	90	110
3790 ＊03000 ※※	-195-110- ※※	2.5～9.0	195	118	55	28	26.3	53.5	44.5 (58.5)	22	58	90	110
3790 ＊03100 ※※	-225-110- ※※	2.5～9.0	225	118	55	28	26.3	53.5	44.5 (58.5)	22	58	90	110
3790 ＊03200 ※※	-255-110- ※※	2.5～9.0	255	135	55	28	26.3	53.5	44.5 (58.5)	22	58	90	110
3790 ＊03300 ※※	NBT-AHO50 or WBT-AHO50 -AH1690 (-AH1690-OH) -165-80- ※※	3.5～16.0	165	118	59	28	36.3	59	51 (64.5)	28	67	90	80
3790 ＊03400 ※※	-195-80- ※※	3.5～16.0	195	118	59	28	36.3	59	51 (64.5)	28	67	90	80
3790 ＊03500 ※※	-225-80- ※※	3.5～16.0	225	118	59	28	36.3	59	51 (64.5)	28	67	90	80
3790 ＊03600 ※※	-165-110- ※※	3.5～16.0	165	118	59	28	36.3	59	51 (64.5)	28	67	90	110
3790 ＊03700 ※※	-195-110- ※※	3.5～16.0	195	118	59	28	36.3	59	51 (64.5)	28	67	90	110
3790 ＊03800 ※※	-225-110- ※※	3.5～16.0	225	118	59	28	36.3	59	51 (64.5)	28	67	90	110
3790 ＊03900 ※※	NBT-AHO50 or WBT-AHO50 -AH2290 (-AH2290-OH) -180-80- ※※	3.5～22.0	180	117	65	28	46.3	69	57 (70.5)	34.5	75	113	80
3790 ＊04000 ※※	-210-80- ※※	3.5～22.0	210	117	65	28	46.3	69	57 (70.5)	34.5	75	113	80
3790 ＊04100 ※※	-240-80- ※※	3.5～22.0	240	117	65	28	46.3	69	57 (70.5)	34.5	75	113	80
3790 ＊04200 ※※	-180-110- ※※	3.5～22.0	180	117	65	28	46.3	69	57 (70.5)	34.5	75	113	110
3790 ＊04300 ※※	-210-110- ※※	3.5～22.0	210	117	65	28	46.3	69	57 (70.5)	34.5	75	113	110
3790 ＊04400 ※※	-240-110- ※※	3.5～22.0	240	117	65	28	46.3	69	57 (70.5)	34.5	75	113	110
3790 ＊04500 ※※	NBT-AHO50 or WBT-AHO50 -AH2590 (-AH2590-OH) -195-80- ※※	9.5～25.0	195	117	101	28	65	90	73 (86.5)	45	90	113	80
3790 ＊04600 ※※	-195-110- ※※	9.5～25.0	195	117	101	28	65	90	73 (86.5)	45	90	113	110

Please replace ※ in the code with 0 for NBT-AHO and 6 for WBT-AHO.

Model names in brackets show "Coolant type", which are quoted on request.

1. ※ is for A dimension. Please refer to P. 179.
2. When ordering, please specify plunger size ("A" dimension).
3. Plunger is fixed (non-adjustable)
4. Collet and spanner are sold separately.
5. ※※※ -AHO30-AH1290-125-50- ※※ is light cutting only.

Ordering Example

Corresponding to our two-face contact BT spindle

NBT-AHO40	- AH	07	90	-	150	-	65	-	06
Shank size		Max. collet I.D.	Angle		Projection length (L)		S		Dimension A

Ordering Example

Corresponding to BT two-face contact spindle

WBT-AHO40	- AH	07	90	-	150	-	65	-	06
Shank size		Max. collet I.D.	Angle		Projection length (L)		S		Dimension A

Accessories for Angle heads fixed type

Model	Nut	Collet	Spanner for nut	Spanner flats for the head
AH0790	HDP-07A	FDC-07	S-0	Width 14mm
AH0990	HDP-09	FDC-09	S-1L	S-1L
AH1290	HDP-12	FDC-12	S-3L	S-3L
AH1690	HDP-16	FDC-16	S-4L	S-4L
AH2290	HDP-22	FDC-22	S-5L	S-5L
AH2590	HPP-25	NTG25	HS2.5-25	HS2.5-25

Collet
P. 086 - 089



Spanner
P. 095



Inch to Metric (mm) → Inch × 25.4
Metric (mm) to Inch → Metric ÷ 25.4 or Metric × 0.03937

Special / Custom Sizes on request

AH , AH-OH

45°

Angle Heads (Fixed Type)

※ AHO Retention Stud is required.

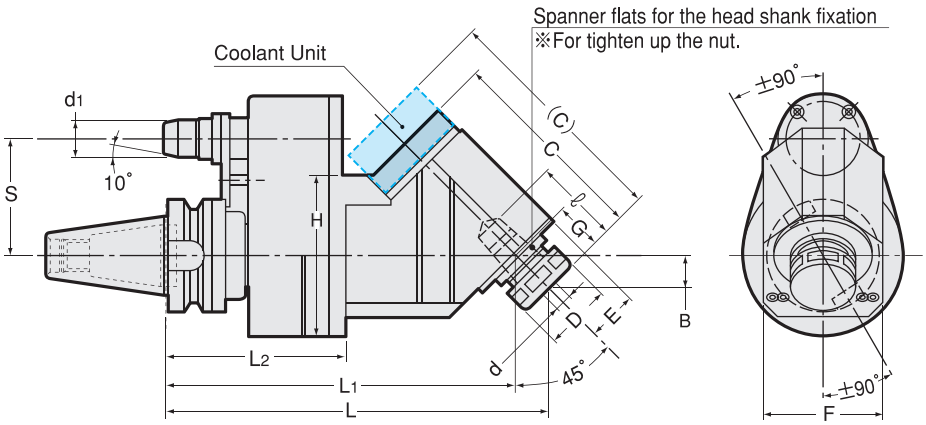



※ Requires a positioning block. Please refer to P.179-180.

- Our two-face contact NBT spindle is incompatible with BT two-face contact spindle (for WBT-AHO). Please refer to P. 41.
- When AHO is used with center through coolant feeding, a designated retention stud (with coolant pipe) for AHO must be used.

Unit : Metric

Code	Model	d	L	L1	L2	ℓ	d1	D	B	C (C)	E	F	G	H	S
3790 ✳ 04800 ※※	NBT-AHO40 or WBT-AHO40 -AH0745(-OH)-195-65- ※※	0.5～7.0	195	179.5	103	35	19.6	23	15.6	88.5 (102)	17	51	22	90	65
3790 ✳ 04900 ※※	-215-65- ※※	0.5～7.0	215	199.5	103	35	19.6	23	15.6	88.5 (102)	17	51	22	90	65
3790 ✳ 05000 ※※	-245-65- ※※	0.5～7.0	245	229.5	103	35	19.6	23	15.6	88.5 (102)	17	51	22	90	65
3790 ✳ 05100 ※※	NBT-AHO40 or WBT-AHO40 -AH945(-OH) -205-65- ※※	2.5～9.0	205	186.5	103	45	19.6	26.3	19.1	104 (118)	22	58	27	90	65
3790 ✳ 05200 ※※	-230-65- ※※	2.5～9.0	230	211.5	103	45	19.6	26.3	19.1	104 (118)	22	58	27	90	65
3790 ✳ 05300 ※※	-260-65- ※※	2.5～9.0	260	241.5	103	45	19.6	26.3	19.1	104 (118)	22	58	27	90	65
3790 ✳ 05400 ※※	NBT-AHO40 or WBT-AHO40 -AH1645(-OH)-215-65- ※※	3.5～16.0	215	197	103	53	19.6	36.3	18.4	113.5 (127)	28	67	26	90	65
3790 ✳ 05500 ※※	-245-65- ※※	3.5～16.0	245	227	103	53	19.6	36.3	18.4	113.5 (127)	28	67	26	90	65
3790 ✳ 05600 ※※	NBT-AHO50 or WBT-AHO50 -AH0745-OH) -210-80- ※※	0.5～7.0	210	194.5	118	35	28	23	15.6	88.5 (102)	17	51	22	90	80
3790 ✳ 05700 ※※	-230-80- ※※	0.5～7.0	230	214.5	118	35	28	23	15.6	88.5 (102)	17	51	22	90	80
3790 ✳ 05800 ※※	-260-80- ※※	0.5～7.0	260	244.5	118	35	28	23	15.6	88.5 (102)	17	51	22	90	80
3790 ✳ 05900 ※※	-210-110- ※※	0.5～7.0	210	194.5	118	35	28	23	15.6	88.5 (102)	17	51	22	90	110
3790 ✳ 06000 ※※	-230-110- ※※	0.5～7.0	230	214.5	118	35	28	23	15.6	88.5 (102)	17	51	22	90	110
3790 ✳ 06100 ※※	-260-110- ※※	0.5～7.0	260	244.5	118	35	28	23	15.6	88.5 (102)	17	51	22	90	110

Inch to Metric (mm) → Inch × 25.4
Metric (mm) to Inch → Metric ÷ 25.4 or Metric × 0.03937

Special / Custom Sizes on request

Unit : Metric

Code	Model	d	L	L1	L2	ℓ	d1	D	B	C (C)	E	F	G	H	S
3790 ∗ 06200 ※※	NBT-AHO50 or WBT-AHO50 **-AH0945(-OH)-220-80-** ※※	2.5 ~ 9.0	220	201.5	118	45	28	26.3	19.1	104 (118)	22	58	27	90	80
3790 ∗ 06300 ※※	**-245-80-** ※※	2.5 ~ 9.0	245	226.5	118	45	28	26.3	19.1	104 (118)	22	58	27	90	80
3790 ∗ 06400 ※※	**-275-80-** ※※	2.5 ~ 9.0	275	256.5	118	45	28	26.3	19.1	104 (118)	22	58	27	90	80
3790 ∗ 06500 ※※	**-220-110-** ※※	2.5 ~ 9.0	220	201.5	118	45	28	26.3	19.1	104 (118)	22	58	27	90	110
3790 ∗ 06700 ※※	**-245-110-** ※※	2.5 ~ 9.0	245	226.5	118	45	28	26.3	19.1	104 (118)	22	58	27	90	110
3790 ∗ 06800 ※※	**-275-110-** ※※	2.5 ~ 9.0	275	256.5	118	45	28	26.3	19.1	104 (118)	22	58	27	90	110
3790 ∗ 06900 ※※	NBT-AHO50 or WBT-AHO50 **-AH1645(-OH)-230-80-** ※※	3.5 ~ 16.0	230	212	118	53	28	36.3	18.4	113.5 (127)	28	67	26	90	80
3790 ∗ 07000 ※※	**-260-80-** ※※	3.5 ~ 16.0	260	242	118	53	28	36.3	18.4	113.5 (127)	28	67	26	90	80
3790 ∗ 07100 ※※	**-230-110-** ※※	3.5 ~ 16.0	230	212	118	53	28	36.3	18.4	113.5 (127)	28	67	26	90	110
3790 ∗ 07200 ※※	**-260-110-** ※※	3.5 ~ 16.0	260	242	118	53	28	36.3	18.4	113.5 (127)	28	67	26	90	110

Please replace ※ in the code with 0 for NBT-AHO and 6 for WBT-AHO.

Model names in brackets show "Coolant type", which are quoted on request.

1. ※ is for A dimension. Please refer to P. 179.
2. When ordering, please specify plunger size ("A" dimension).
3. Plunger is fixed (non-adjustable)
4. Collet and spanner are sold separately.

Accessories for Angle heads fixed type

Model	Nut	Collet	Spanner for nut	Spanner flats for the head
AH0745	HDP-07A	FDC-07	S-0	Width 14mm
AH0945	HDP-09	FDC-09	S-1L	S-1L
AH1645	HDP-16	FDC-16	S-4L	S-4L

Collet

P. 086 - 089



Spanner

P. 095



Ordering Example

Corresponding to our two-face contact BT spindle

NBT-AHO40	- AH	07	45	- 195	- 65	- 06
Shank size		Max. collet I.D.	Angle	Projection length (L)	S	Dimension A

Ordering Example

Corresponding to BT two-face contact spindle

WBT-AHO40	- AH	07	45	- 195	- 65	- 06
Shank size		Max. collet I.D.	Angle	Projection length (L)	S	Dimension A

Coolant Accessories

Drawing for AHO coolant through type

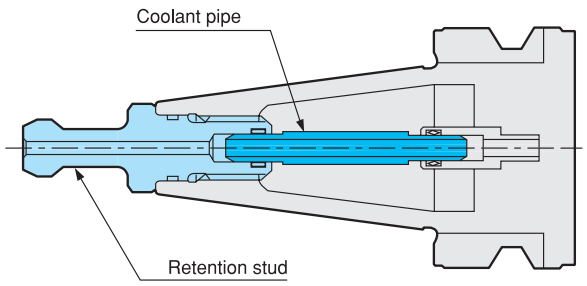

AHO holder requires a coolant pipe and a retention stud for center through coolant feed.

Retention stud

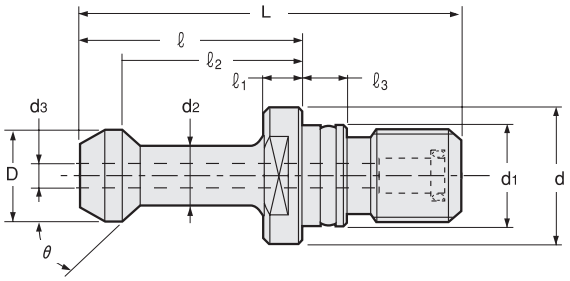

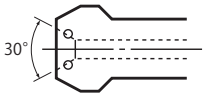

※ For retention studs other than MAS / JIS standard, please indicate the position of the sealing as illustrated in the above example.

Unit : Metric

Code	Model	MAS	JIS	D	d	d1	d2	d3	L	ℓ	ℓ1	ℓ2	ℓ3	G	θ
3800 80000000	**PSB-0-CH-AHO**	P30T1	—	11	16.5	12.5	7	2.5	43	23	5	18	5.5	M12	45
3800 80000003	**PSB-3-CH-AHO**	P40T1	—	15	23	17	10	4	60	35	6	28	7	M16	45
3800 80000004	**PSB-4-CH-AHO**	P40T2	—	15	23	17	10	4	60	35	6	28	7	M16	60
3800 80000007	**PSB-7-CH-AHO**	P50T1	—	23	38	25	17	6	85	45	10	35	10	M24	45
3800 80000008	**PSB-8-CH-AHO**	P50T2	—	23	38	25	17	6	85	45	10	35	10	M24	60
3800 80000030	**PSB-30P-AHO**	—	30P	12	16.5	12.5	8	4	43	23.4	5	18.4	6	M12	75
3800 80000040	**PSB-40P-AHO**	—	40P	19	23	17	14	7	54	29	7	23	7	M16	75
3800 80000050	**PSB-50P-AHO**	—	50P	28	38	25	21	10	74	34	7	25	10	M24	75

Unit : Metric

Code	Model	D	d	d1	d2	d3	L	ℓ	ℓ1	ℓ2	ℓ3	G	θ
380080000017	**PSB-17-CH-AHO**	24	36	25	18	6	71	31	5	23	10	M24	45°
380080000019	**PSB-19-CH-AHO**	23	38	25	17	6	85	45	10	35	10	M24	90°
380080000023	**PSB-23-CH-AHO**	18.8	22	17	12.5	7	44.1	19.1	3	14	5	M16	45°
380080000024	**PSB-24-CH-AHO**	29	37	25	20.9	10	65.2	25.2	5	17.6	8	M24	45°
380080000025	**PSB-25-CH-AHO**	19	23	17	14	7	54	29	4	23	7	M16	75°
380080000026	**PSB-26-CH-AHO**	11	16.5	12.5	7.5	2.5	43	23	5	18	5.5	M12	60°

A coolant pipe is included in a retention stud for AHO.

Coolant pipe

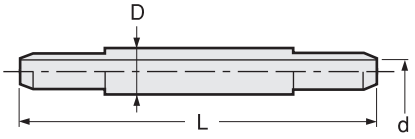

Coolant pipe is included in AHO retention studs. Also available individually. Coolant pipe only works with AHO retention stud.

Unit : Metric

Code	Model	L	D	d
3800 60000030	**CP-NBT30-OH**	42	6	3
3800 60000040	**CP-NBT40-OH**	70	8	4
3800 60000050	**CP-NBT50-OH**	98	13	7

Inch to Metric (mm) → Inch × 25.4
Metric (mm) to Inch → Metric ÷ 25.4 or Metric × 0.03937

Special / Custom Sizes on request

HSK

HSK TOOLING SYSTEM

CT·S

Super tite-lock Milling Chuck

● Slim design milling chuck. Specially designed slits enables heavy endmilling.

Type1

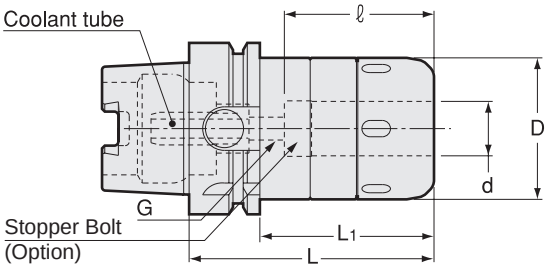

Type2

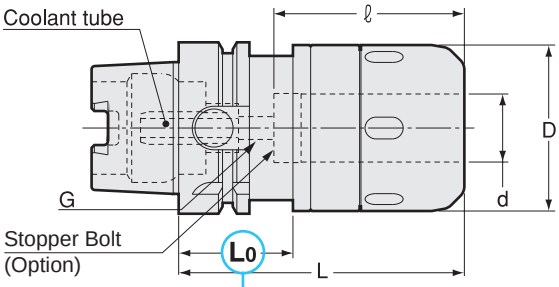

⚠ Caution
★ Take caution against A.T.C. arm and tool magazine interference.

Type3

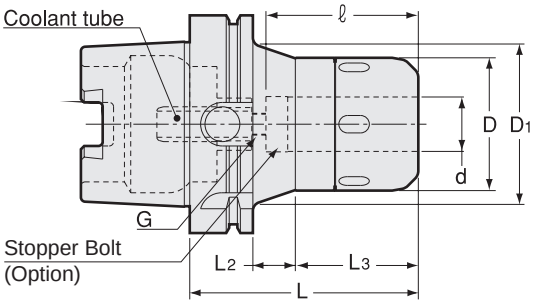

Caution
Please rotate the clamping ring counterclockwise more than 360 degrees after a cutting tool is removed.

● Coolant tube is included.

Inch Sizes

Unit : Inch

Code	Model	Type	d	D	D1	L	L1	L2	L3	ℓ	L0	G	kg	Spanner
5690 13124090	HSK40A -CT0750S -90	2	0.750	2.047	-	3.543	-	-	-	2.362	1.378	M5	1.0	HS-2-20
5690 13132105	HSK40A -CT1000S -105	2	1.000	2.402	-	4.134	-	-	-	2.362	1.378	M5	1.6	HS-2.5-25
5690 15124090	HSK63A -CT0750S -90	1	0.750	2.047	-	3.543	2.520	-	-	2.362	-	M8	1.5	HS-2-20
5690 15124105	-105	1	0.750	2.047	-	4.134	3.110	-	-	2.953	-	M8	1.8	
5690 15124135	-135	1	0.750	2.047	-	5.315	4.291	-	-	3.150	-	M8	2.2	
5690 15132105	HSK63A -CT1000S -105	2	1.000	2.402	-	4.134	-	-	-	2.953	1.654	M8	2.0	HS-2.5-25
5690 15132120	-120	2	1.000	2.402	-	4.724	-	-	-	2.953	1.654	M8	2.3	
5690 15132135	-135	2	1.000	2.402	-	5.315	-	-	-	3.150	1.654	M8		
5690 15140105	HSK63A -CT1250S -105	2	1.250	2.874	-	4.134	-	-	-	2.953	1.654	M8	2.4	HS-3-32
5690 15140120	-120	2	1.250	2.874	-	4.724	-	-	-	3.543	1.654	M8	2.7	
5690 15140150	-150	2	1.250	2.874	-	5.906	-	-	-	4.724	1.654	M8	3.5	
5690 17124090	HSK100A -CT0750S - 90 ＊	3	0.750	2.047	2.913	3.543	-	0.630	1.772	2.165	-	M10	2.9	HS-2-20
5690 17124105	-105	3	0.750	2.047	2.913	4.134	-	1.220	1.772	2.756	-	M10	3.2	
5690 17124135	-135	3	0.750	2.047	2.913	5.315	-	2.402	1.772	3.150	-	M10		
5690 17124150	-150	3	0.750	2.047	2.913	5.906	-	2.992	1.772	3.150	-	M10		
5690 17132090	HSK100A -CT1000S - 90 ＊	1	1.000	2.402	-	3.543	2.402	-	-	2.165	-	M10		HS-2.5-25
5690 17132105	-105	3	1.000	2.402	2.913	4.134	-	0.787	2.205	2.756	-	M10	3.5	
5690 17132135	-135	3	1.000	2.402	2.913	5.315	-	1.969	2.205	3.150	-	M10		
5690 17132150	-150	3	1.000	2.402	2.913	5.906	-	2.559	2.205	3.150	-	M10	4.7	
5690 17140090	HSK100A -CT1250S - 90 ＊	1	1.250	2.874	-	3.543	2.402	-	-	2.165	-	M10		HS-3-32
5690 17140105	-105	1	1.250	2.874	-	4.134	2.992	-	-	2.756	-	M10	4.0	
5690 17140120	-120	1	1.250	2.874	-	4.724	3.583	-	-	3.346	-	M10		
5690 17140135	-135	1	1.250	2.874	-	5.315	4.173	-	-	3.937	-	M10	4.8	
5690 17140150	-150	1	1.250	2.874	-	5.906	4.764	-	-	4.528	-	M10	5.2	
5690 17164110	HSK100A -CT2000S -110 ＊	2	2.000	4.134	-	4.331	-	-	-	2.756	1.772	M10	5.8	HS-4V
5690 17164135	-135	2	2.000	4.134	-	5.315	-	-	-	3.937	1.772	M10		
5690 17164150	-150	2	2.000	4.134	-	5.906	-	-	-	4.331	1.772	M10		
5690 17164165	-165	2	2.000	4.134	-	6.496	-	-	-	4.724	1.772	M10		

1.When ordering, indicate number of spanners required. "No charge" spanners are limited to number of milling chucks on order.
2.Tolerance of cutting tool shank must be h7.

Ordering Example

HSK40A - CT 0750 S - 90
Shank size | I.D. (d) | Projection length (L)

Inch to Metric (mm) → Inch × 25.4
Metric (mm) to Inch → Metric ÷ 25.4 or Metric × 0.03937

Special / Custom Sizes on request

Metric Sizes

Unit : Metric

Code	Model	Type	d	D	D1	L	L1	L2	L3	ℓ	L0	G	kg	Spanner
5690 13016075	HSK40A -CT16S -75	2	16	45	—	75	—	—	—	50	★ 26	M5	0.8	HS-1-16
5690 13016090	-90 ＊ 1	2	16	45	—	90	—	—	—	60	35	M5	0.9	
5690 13020090	HSK40A -CT20S -90 ＊ 2	2	20	52	—	90	—	—	—	60	35	M5	1.0	HS-2-20
5690 13020105	-105 ＊ 2	2	20	52	—	105	—	—	—	60	35	M5	1.2	
5690 13025105	HSK40A -CT25S -105 ＊ 2	2	25	61	—	105	—	—	—	60	35	M5	1.6	HS-2.5-25
5690 14016090	HSK50A -CT16S -90 ＊ 1	2	16	45	—	90	—	—	—	60	42	M5	1.1	HS-1-16
5690 14020090	HSK50A -CT20S -90 ＊ 2	2	20	52	—	90	—	—	—	60	42	M5	1.2	HS-2-20
5690 14020105	-105 ＊ 2	2	20	52	—	105	—	—	—	60	42	M5	1.4	
5690 14025105	HSK50A -CT25S -105 ＊ 1	2	25	61	—	105	—	—	—	75	42	M5	1.6	HS-2.5-25
5690 15016075	HSK63A -CT16S -75 ＊ 2	1	16	45	—	75	49	—	—	47	—	M8	1.2	HS-1-16
5690 15016090	-90	1	16	45	—	90	64	—	—	60	—	M8	1.3	
5690 15020090	HSK63A -CT20S -90 ＊ 2	1	20	52	—	90	64	—	—	60	—	M8	1.5	HS-2-20
5690 15020105	-105 ＊ 1	1	20	52	—	105	79	—	—	75	—	M8	1.7	
5690 15020135	-135 ＊ 1	1	20	52	—	135	109	—	—	80	—	M8	2.2	
5690 15025105	HSK63A -CT25S -105 ＊ 1	2	25	61	—	105	—	—	—	75	42	M8	2.0	HS-2.5-25
5690 15025120	-120 ＊ 1	2	25	61	—	120	—	—	—	75	42	M8	2.3	
5690 15025135	-135 ＊ 1	2	25	61	—	135	—	—	—	80	42	M8	2.7	
5690 15032105	HSK63A -CT32S -105 ＊ 3	2	32	73	—	105	—	—	—	75	42	M8	2.4	HS-3-32
5690 15032120	-120 ＊ 3	2	32	73	—	120	—	—	—	90	42	M8	2.7	
5690 15032150	-150 ＊ 1	2	32	73	—	150	—	—	—	120	42	M8	3.5	
5690 17016090	HSK100A -CT16S -90 ＊ 2	3	16	45	56	90	—	16	45	55	—	M10	2.8	HS-1-16
5690 17016105	-105	3	16	45	56	105	—	31	45	70	—	M10	2.9	
5690 17020090	HSK100A -CT20S -90 ＊ 6	3	20	52	64	90	—	16	45	55	—	M10	2.9	HS-2-20
5690 17020105	-105 ＊ 4	3	20	52	64	105	—	18	58	70	—	M10	3.3	
5690 17020120	-120	3	20	52	64	120	—	33	58	80	—	M10	3.5	
5690 17020135	-135	3	20	52	64	135	—	48	58	80	—	M10	3.7	
5690 17020150	-150	3	20	52	64	150	—	63	58	80	—	M10	4.1	
5690 17025090	HSK100A -CT25S -90 ＊ 6	1	25	61	—	90	61	—	—	55	—	M10	3.1	HS-2.5-25
5690 17025105	-105 ＊ 5	3	25	61	74	105	—	20	56	70	—	M10	3.5	
5690 17025120	-120	3	25	61	74	120	—	35	56	80	—	M10	3.9	
5690 17025135	-135	3	25	61	74	135	—	50	56	80	—	M10	4.3	
5690 17025150	-150	3	25	61	73	150	—	65	56	80	—	M10	4.7	
5690 17032090	HSK100A -CT32S -90 ＊ 6	1	32	73	—	90	61	—	—	55	—	M10	3.6	HS-3-32
5690 17032105	-105 ＊ 2	1	32	73	—	105	76	—	—	70	—	M10	4.0	
5690 17032120	-120 ＊ 3	1	32	73	—	120	91	—	—	85	—	M10	4.4	
5690 17032135	-135 ＊ 1	1	32	73	—	135	106	—	—	100	—	M10	4.8	
5690 17032150	-150 ＊ 1	1	32	73	—	150	121	—	—	115	—	M10	5.2	
5690 17042105	HSK100A -CT42S -105 ＊ 6	2	42	88	—	105	—	—	—	70	45	M10	4.7	HS-4-42
5690 17042120	-120 ＊ 2	2	42	88	—	120	—	—	—	85	45	M10	5.2	
5690 17042135	-135 ＊ 2	2	42	88	—	135	—	—	—	100	45	M10	5.8	
5690 17042150	-150 ＊ 2	2	42	88	—	150	—	—	—	110	45	M10	6.4	
5690 17042165	-165 ＊ 1	2	42	88	—	165	—	—	—	120	45	M10	7.0	

1. When ordering, indicate number of spanners required. “No charge” spanners are limited to number of milling chucks on order.
2. Tolerance of cutting tool shank must be h7.

Ordering Example

HSK40A - CT 16 S - 90

Shank size | I.D. (d) | Projection length (L)

Accessories

Models with ＊ 1 - ＊ 6 cannot be used with some accessories due to short ℓ length.

	Stopper Bolt	Straight Collet		Morse Taper Adapter		Jacobs Adapter	
	BL (P.295)	MC (P.066)	MCA (P.067)	MA (P.068)	MAB (P.068)	JA (P.069)	JAB (P.069)
＊ 1	Yes	Yes	No	Yes	Yes	Yes	Yes
＊ 2	Yes	Yes	No	No	No	No	No
＊ 3	Yes	Yes	No	No	Yes	No	Yes
＊ 4	Yes	Yes	Yes	Yes	No	Yes	No
＊ 5	Yes	Yes	Yes	No	No	Yes	No
＊ 6	Yes	No	No	No	No	No	No

Spanner

P. 069



Min. chucking length

Without MC collet

I.D.of Milling Chuck	Min. chucking length
16, 20	40
25, 32, 42	50

With MC collet

Collet I.D.	Min. chucking length	
	MC	MC-C, MC-OH
6, 8	30	30
10, 12	40	40
16, 20	45	45
25	50	50
32	50	60

Inch to Metric (mm) → Inch × 25.4
Metric (mm) to Inch → Metric ÷ 25.4 or Metric × 0.03937

Special / Custom Sizes on request

CT·S-E

Super Tite-Lock Milling Chuck (High-Balanced Type)

● Slim design milling chuck. Specially designed slits enables heavy end milling. (High balanced type for higher RPM)

Type1

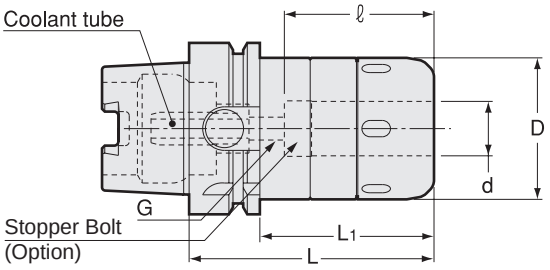

Type2

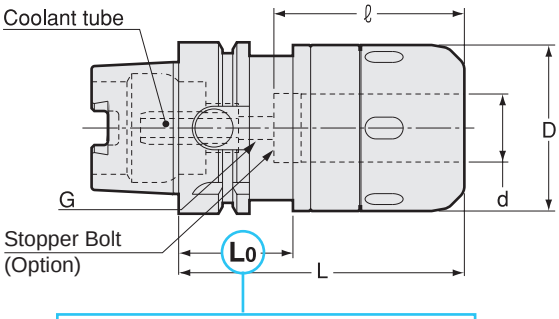

Caution
★ Take caution against A.T.C. arm and tool magazine interference.

Type3

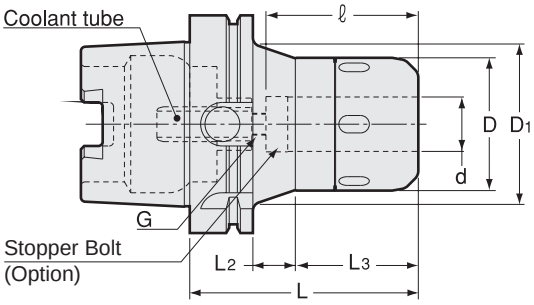

Caution
Please rotate the clamping ring counterclockwise more than 360 degrees after a cutting tool is removed.

● Coolant tube is included.

Inch Sizes

Unit : Inch

Code	Model	Type	d	D	D1	L	L1	L2	L3	ℓ	L0	G	kg	Spanner
5690 13324090	HSK40A -CT0750S - 90E	2	0.750	2.047	-	3.543	-	-	-	2.362	1.378	M5	1.0	HS-2-20
5690 13332105	HSK40A -CT1000S -105E	2	1.000	2.402	-	4.134	-	-	-	2.362	1.378	M5		HS-2.5-25
5690 15324090	HSK63A -CT0750S - 90E	1	0.750	2.047	-	3.543	2.520	-	-	2.362	-	M8		HS-2-20
5690 15324105	-105E	1	0.750	2.047	-	4.134	3.110	-	-	2.953	-	M8		
5690 15324135	-135E	1	0.750	2.047	-	5.315	4.291	-	-	3.150	-	M8		
5690 15332105	HSK63A -CT1000S -105E	2	1.000	2.402	-	4.134	-	-	-	2.953	1.654	M8		HS-2.5-25
5690 15332120	-120E	2	1.000	2.402	-	4.724	-	-	-	2.953	1.654	M8		
5690 15332135	-135E	2	1.000	2.402	-	5.315	-	-	-	3.150	1.654	M8		
5690 15340105	HSK63A -CT1250S -105E	2	1.250	2.874	-	4.134	-	-	-	2.953	1.654	M8		HS-3-32
5690 15340120	-120E	2	1.250	2.874	-	4.724	-	-	-	3.543	1.654	M8		
5690 15340150	-150E	2	1.250	2.874	-	5.906	-	-	-	4.724	1.654	M8		
5690 17324090	HSK100A -CT0750S - 90E ＊	3	0.750	2.047	2.913	3.543	-	0.630	1.772	2.165	-	M10		HS-2-20
5690 17324105	-105E	3	0.750	2.047	2.913	4.134	-	1.220	1.772	2.756	-	M10		
5690 17324135	-135E	3	0.750	2.047	2.913	5.315	-	2.402	1.772	3.150	-	M10		
5690 17324150	-150E	3	0.750	2.047	2.913	5.906	-	2.992	1.772	3.150	-	M10		
5690 17332090	HSK100A -CT1000S - 90E ＊	1	1.000	2.402	-	3.543	2.402	-	-	2.165	-	M10		HS-2.5-25
5690 17332105	-105E	3	1.000	2.402	2.913	4.134	-	0.787	2.205	2.756	-	M10	3.5	
5690 17332135	-135E	3	1.000	2.402	2.913	5.315	-	1.969	2.205	3.150	-	M10		
5690 17332150	-150E	3	1.000	2.402	2.913	5.906	-	2.559	2.205	3.150	-	M10		
5690 17340090	HSK100A -CT1250S - 90E ＊	1	1.250	2.874	-	3.543	2.402	-	-	2.165	-	M10		HS-3-32
5690 17340105	-105E	1	1.250	2.874	-	4.134	2.992	-	-	2.756	-	M10	3.9	
5690 17340120	-120E	1	1.250	2.874	-	4.724	3.583	-	-	3.346	-	M10		
5690 17340135	-135E	1	1.250	2.874	-	5.315	4.173	-	-	3.937	-	M10		
5690 17340150	-150E	1	1.250	2.874	-	5.906	4.764	-	-	4.528	-	M10		
5690 17364110	HSK100A -CT2000S -110E ＊	2	2.000	4.134	-	4.331	-	-	-	2.756	1.772	M10		HS-4V
5690 17364135	-135E	2	2.000	4.134	-	5.315	-	-	-	3.937	1.772	M10		
5690 17364150	-150E	2	2.000	4.134	-	5.906	-	-	-	4.331	1.772	M10		
5690 17364165	-165E	2	2.000	4.134	-	6.496	-	-	-	4.724	1.772	M10		

1.When ordering, indicate number of spanners required. “No charge” spanners are limited to number of milling chucks on order.
2.Tolerance of cutting tool shank must be h7.

Ordering Example

HSK40A - CT 0750 S - 90 E
Shank size — I.D. (d) — Projection length (L)

Inch to Metric (mm) → Inch × 25.4
Metric (mm) to Inch → Metric ÷ 25.4 or Metric × 0.03937

Special / Custom Sizes on request

Metric Sizes

Unit : Metric

Code	Model	Type	d	D	D1	L	L1	L2	L3	ℓ	L0	G	kg	Spanner
5690 13216075	HSK40A -CT16S -75E ＊1	2	16	45	-	75	-	-	-	50	★ 26	M5	0.8	HS-1-16
5690 13216090	-90E ＊1	2	16	45	-	90	-	-	-	60	35	M5	0.9	
5690 13220090	HSK40A -CT20S -90E ＊2	2	20	52	-	90	-	-	-	60	35	M5	1.0	HS-2-20
5690 13220105	-105E ＊2	2	20	52	-	105	-	-	-	60	35	M5	1.2	
5690 13225105	HSK40A -CT25S -105E ＊2	2	25	61	-	105	-	-	-	60	35	M5	1.6	HS-2.5-25
5690 14216090	HSK50A -CT16S -90E ＊1	2	16	45	-	90	-	-	-	60	42	M5	1.1	HS-1-16
5690 14220090	HSK50A -CT20S -90E ＊2	2	20	52	-	90	-	-	-	60	42	M5	1.2	HS-2-20
5690 14220105	-105E ＊2	2	20	52	-	105	-	-	-	60	42	M5	1.4	
5690 14225105	HSK50A -CT25S -105E ＊1	2	25	61	-	105	-	-	-	75	42	M5	1.6	HS-2.5-25
5690 15216075	HSK63A -CT16S -75E ＊2	1	16	45	-	75	49	-	-	47	-	M8	1.2	HS-1-16
5690 15216090	-90E	1	16	45	-	90	64	-	-	60	-	M8	1.3	
5690 15220090	HSK63A -CT20S -90E ＊2	1	20	52	-	90	64	-	-	60	-	M8	1.5	HS-2-20
5690 15220105	-105E ＊1	1	20	52	-	105	79	-	-	75	-	M8	1.7	
5690 15220135	-135E ＊1	1	20	52	-	135	109	-	-	80	-	M8	2.2	
5690 15225105	HSK63A -CT25S -105E ＊1	2	25	61	-	105	-	-	-	75	42	M8	2.0	HS-2.5-25
5690 15225120	-120E ＊1	2	25	61	-	120	-	-	-	75	42	M8	2.3	
5690 15225135	-135E ＊1	2	25	61	-	135	-	-	-	80	42	M8	2.7	
5690 15232105	HSK63A -CT32S -105E ＊3	2	32	73	-	105	-	-	-	75	42	M8	2.4	HS-3-32
5690 15232120	-120E ＊3	2	32	73	-	120	-	-	-	90	42	M8	2.7	
5690 15232150	-150E ＊1	2	32	73	-	150	-	-	-	120	42	M8	3.5	
5690 17216090	HSK100A -CT16S -90E ＊2	3	16	45	56	90	-	16	45	55	-	M10	2.7	HS-1-16
5690 17216105	-105E	3	16	45	56	105	-	31	45	70	-	M10	2.9	
5690 17220090	HSK100A -CT20S -90E ＊6	3	20	52	64	90	-	16	45	55	-	M10	2.9	HS-2-20
5690 17220105	-105E ＊4	3	20	52	64	105	-	18	58	70	-	M10	3.3	
5690 17220120	-120E	3	20	52	64	120	-	33	58	80	-	M10	3.5	
5690 17220135	-135E	3	20	52	64	135	-	48	58	80	-	M10	3.7	
5690 17220150	-150E	3	20	52	64	150	-	63	58	80	-	M10	4.1	
5690 17225090	HSK100A -CT25S -90E ＊6	1	25	61	-	90	61	-	-	55	-	M10	3.1	HS-2.5-25
5690 17225105	-105E ＊5	3	25	61	74	105	-	20	56	70	-	M10	3.5	
5690 17225120	-120E	3	25	61	74	120	-	35	56	80	-	M10	3.9	
5690 17225135	-135E	3	25	61	74	135	-	50	56	80	-	M10	4.3	
5690 17225150	-150E	3	25	61	73	150	-	65	56	80	-	M10	4.7	
5690 17232090	HSK100A -CT32S -90E ＊6	1	32	73	-	90	61	-	-	55	-	M10	3.6	HS-3-32
5690 17232105	-105E ＊2	1	32	73	-	105	76	-	-	70	-	M10	4.0	
5690 17232120	-120E ＊3	1	32	73	-	120	91	-	-	85	-	M10	4.4	
5690 17232135	-135E ＊1	1	32	73	-	135	106	-	-	100	-	M10	4.8	
5690 17232150	-150E ＊1	1	32	73	-	150	121	-	-	115	-	M10	5.2	
5690 17242105	HSK100A -CT42S -105E ＊6	2	42	88	-	105	-	-	-	70	45	M10	4.7	HS-4-42
5690 17242120	-120E ＊2	2	42	88	-	120	-	-	-	85	45	M10	5.2	
5690 17242135	-135E ＊2	2	42	88	-	135	-	-	-	100	45	M10	5.8	
5690 17242150	-150E ＊2	2	42	88	-	150	-	-	-	110	45	M10	6.4	
5690 17242165	-165E ＊1	2	42	88	-	165	-	-	-	120	45	M10	7.0	

1.When ordering, indicate number of spanners required.
"No charge" spanners are limited to number of milling chucks on order.
2.Tolerance of cutting tool shank must be h7.

Ordering Example

HSK40A - CT 16 S - 75 E

Shank size | I.D. (d) | Projection length (L)

Accessories

Models with ＊1 - ＊6 cannot be used with some accessories due to short ℓ length.

	Stopper Bolt	Straight Collet		Morse Taper Adapter		Jacobs Adapter	
	BL (P.295)	MC (P.066)	MCA (P.067)	MA (P.068)	MAB (P.068)	JA (P.069)	JAB (P.069)
＊1	Yes	Yes	No	Yes	Yes	Yes	Yes
＊2	Yes	Yes	No	No	No	No	No
＊3	Yes	Yes	No	No	Yes	No	Yes
＊4	Yes	Yes	Yes	Yes	No	Yes	No
＊5	Yes	Yes	Yes	No	No	Yes	No
＊6	Yes	No	No	No	No	No	No

Spanner

P. 069



Min. chucking length

Without MC collet

I.D.of Milling Chuck	Min. chucking length
16、20	40
25、32、42	50

With MC collet

Collet I.D.	Min. chucking length	
	MC	MC-C、MC-OH
6、8	30	30
10、12	40	40
16、20	45	45
25	50	50
32	50	60

Inch to Metric (mm) → Inch × 25.4
Metric (mm) to Inch → Metric ÷ 25.4 or Metric × 0.03937

Special / Custom Sizes on request

CT·A

Tite-Lock Milling Chuck

● Slim design milling chuck. Clicking sound tells completion of clamping.

Type1

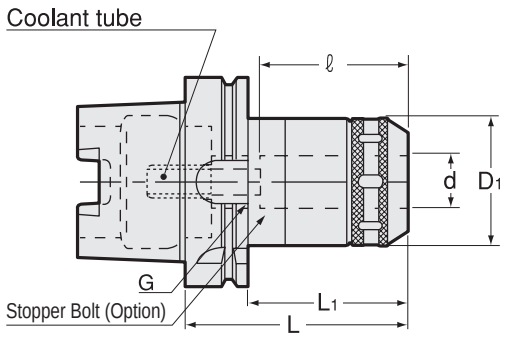

Type2

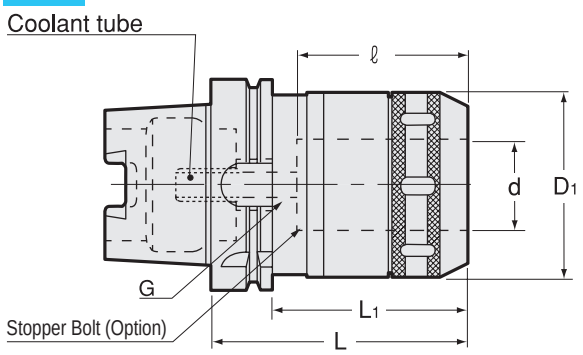

Type3

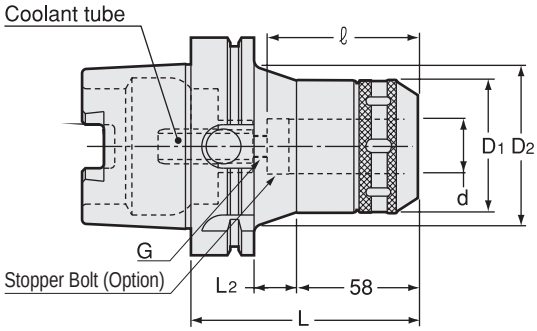

Caution

Please rotate the clamping ring counterclockwise more than 360 degrees after a cutting tool is removed.

● Coolant tube is included.

Metric Sizes

Unit : Metric

Code	Model	Type	d	L	L1	L2	D1	D2	G	ℓ	kg	Spanner
5320 13016090	**HSK40A -CT16A -90 ＊1**	2	16	90	70	-	45	-	M5	60	0.8	HS-1-16
5320 13020105	**HSK40A -CT20A -105 ＊2**	2	20	105	85	-	52	-	M5	60	1.2	HS-2-20
5320 13025105	**HSK40A -CT25A -105 ＊2**	2	25	105	85	-	61	-	M5	60	1.5	HS-2.5-25
5320 14016090	**HSK50A -CT16A -90 ＊1**	2	16	90	64	-	45	-	M5	60	1.0	HS-1-16
5320 14020105	**HSK50A -CT20A -105 ＊2**	2	20	105	79	-	52	-	M5	60	1.4	HS-2-20
5320 14025105	**HSK50A -CT25A -105 ＊2**	2	25	105	79	-	61	-	M5	60	1.6	HS-2.5-25
5320 15020105	**HSK63A -CT20A -105 ＊1**	1	20	105	79	-	52	-	M8	75	1.7	HS-2-20
5320 15020135	**-135 ＊1**	1	20	135	109	-	52	-	M8	80	2.1	
5320 15025105	**HSK63A -CT25A -105 ＊1**	2	25	105	79	-	61	-	M8	75	1.9	HS-2.5-25
5320 15025135	**-135 ＊1**	2	25	135	109	-	61	-	M8	80	2.4	
5320 15032120	**HSK63A -CT32A -120 ＊3**	2	32	120	94	-	73	-	M8	90	2.5	HS-3-32
5320 15032150	**-150 ＊1**	2	32	150	124	-	73	-	M8	120	3.1	
5320 17020105	**HSK100A -CT20A -105 ＊4**	3	20	105	76	18	52	73	M10	70	3.2	HS-2-20
5320 17020135	**-135**	3	20	135	106	48	52	78	M10	80	3.9	
5320 17020150	**-150**	3	20	150	121	63	52	74	M10	80	4.2	
5320 17025105	**HSK100A -CT25A -105 ＊5**	3	25	105	76	18	61	71	M10	70	3.6	HS-2.5-25
5320 17025135	**-135**	3	25	135	106	48	61	73	M10	80	4.2	
5320 17025150	**-150**	3	25	150	121	63	61	73	M10	80	4.6	
5320 17032105	**HSK100A -CT32A -105 ＊2**	1	32	105	76	-	73	-	M10	70	3.9	HS-3-32
5320 17032135	**-135 ＊1**	1	32	135	106	-	73	-	M10	100	4.6	
5320 17032150	**-150 ＊1**	1	32	150	121	-	73	-	M10	115	5.0	
5320 17042135	**HSK100A -CT42A -135 ＊2**	2	42	135	106	-	88	-	M10	100	5.6	HS-4-42
5320 17042150	**-150 ＊2**	2	42	150	121	-	88	-	M10	110	6.5	
5320 17042165	**-165 ＊1**	2	42	165	136	-	88	-	M10	120	7.0	

1.When ordering, indicate number of spanners required. “No charge” spanners are limited to number of milling chucks on order.
2.Tolerance of cutting tool shank must be h7.

Inch to Metric (mm) → Inch × 25.4
Metric (mm) to Inch → Metric ÷ 25.4 or Metric × 0.03937

Special / Custom Sizes on request

Accessories

Models with ＊1 - ＊5 cannot be used with some accessories due to short ℓ length.

	Stopper Bolt	Straight Collet		Morse Taper Adapter		Jacobs Adapter	
	BL (P.295)	MC (P.066)	MCA (P.067)	MA (P.068)	MAB (P.068)	JA (P.069)	JAB (P.069)
＊1	Yes	Yes	No	Yes	Yes	Yes	Yes
＊2	Yes	Yes	No	No	No	No	No
＊3	Yes	Yes	No	No	Yes	No	Yes
＊4	Yes	Yes	Yes	Yes	No	Yes	No
＊5	Yes	Yes	Yes	No	No	Yes	No

Min. chucking length

Without MC collet

I.D.of Milling Chuck	Min. chucking length
16	40
20, 25	45
32, 42	60

With MC collet

Collet I.D.	Min. chucking length
6, 8	30
10, 12	40
16, 20	45
25	55
32	60

Ordering Example

HSK40A - CT 16 A - 90

Shank size | I.D. (d) | Projection length (L)

Spanner

P. 069



Stopper Bolt (for HSK) HSK-BL

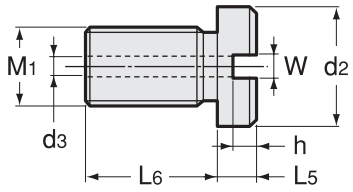

Code	Model	M1	L5	L6	W	h	d2	d3	Shank size
5691 040040 ※※	**HSK40 -BL -L5**	M5 P=0.8	5、15、25	8.5	5	2.5	13	2.5	HSK40A,HSK50A
5691 04006305	**HSK63 -BL -5**	M8 P=1.25	5	5.5	5	3	15	4	HSK63A
5691 040063 ※※	**HSK63 -BL -L5**	M8 P=1.25	15、25	7.5	5	3	15	4	HSK63A
5691 040100 ※※	**HSK100 -BL -L5**	M10 P=1.5	5、15、25	14	5	3.5	15	4.5	HSK100A

Choose right L5 dimension by checking minimum insertion length and shank I.D. depth.

Ordering Example

HSK63 - BL - 15

Shank Size | L5

HDC·A

High-Precision Collet Holder

● Suitable for drilling, reaming and finish endmilling.

Type1

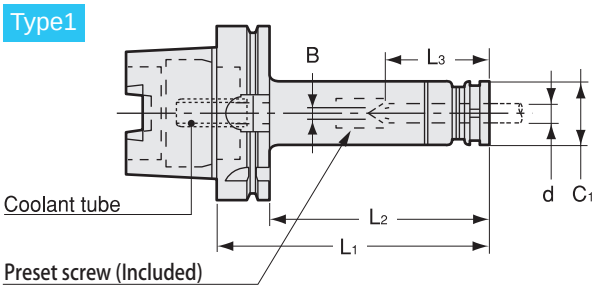

Type2

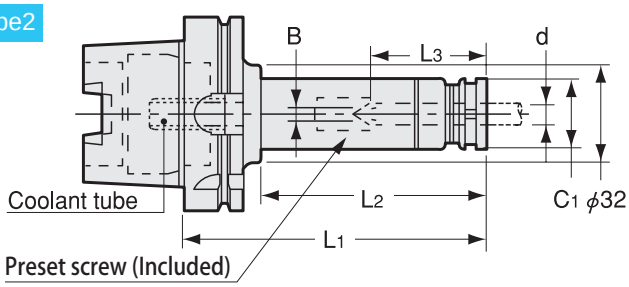

Type3

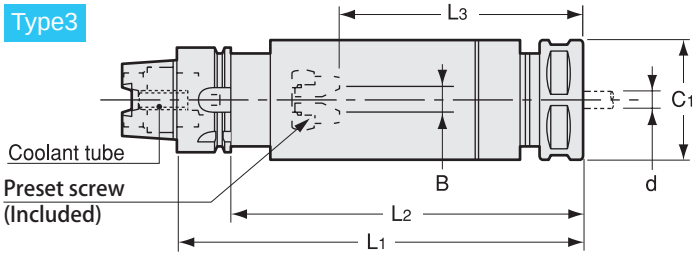

● Coolant tube is included.

Unit : Metric

Code	Model	Type	d	L1	L2	B	L3	C1	Nut	kg	Collet	Spanner
5360 13107060	**HSK40A -HDC07A -60**	1	0.5 ~ 7.0	60	40	0 ~ 4	22 ~ 27	23	HDP-07A	0.4	FDC-07	S-0
5360 13107075	**-75**	1	0.5 ~ 7.0	75	55	0 ~ 4	22 ~ 38	23	HDP-07A	0.4		
5360 13107090	**-90**	1	0.5 ~ 7.0	90	70	0 ~ 4	22 ~ 49	23	HDP-07A	0.4		
5360 13107120	**-120**	1	0.5 ~ 7.0	120	100	0 ~ 4	22 ~ 49	23	HDP-07A	0.5		
5360 13107150	**-150**	1	0.5 ~ 7.0	150	130	0 ~ 4	22 ~ 49	23	HDP-07A	0.6		
5360 13109060	**HSK40A -HDC09A -60**	1	2.5 ~ 9.0	60	40	—	40	26	HDP-09	0.4	FDC-09	S-1L
5360 13109075	**-75**	1	2.5 ~ 9.0	75	55	0 ~ 4	27 ~ 35	26	HDP-09	0.4		
5360 13109090	**-90**	1	2.5 ~ 9.0	90	70	0 ~ 4	27 ~ 46	26	HDP-09	0.5		
5360 13109120	**-120**	1	2.5 ~ 9.0	120	100	0 ~ 4	27 ~ 61	26	HDP-09	0.6		
5360 13109150	**-150**	1	2.5 ~ 9.0	150	130	0 ~ 4	27 ~ 61	26	HDP-09	0.7		
5360 13112075	**HSK40A -HDC12A -75**	1	2.5 ~ 12.0	75	55	0 ~ 5	33 ~ 34	32	HDP-12	0.5	FDC-12	S-3L
5360 13112090	**-90**	1	2.5 ~ 12.0	90	70	0 ~ 5	33 ~ 51	32	HDP-12	0.6		
5360 13112120	**-120**	1	2.5 ~ 12.0	120	100	0 ~ 5	33 ~ 74	32	HDP-12	0.7		
5360 13112150	**-150**	1	2.5 ~ 12.0	150	130	0 ~ 5	33 ~ 74	32	HDP-12	0.9		
5360 13116075	**HSK40A -HDC16A -75**	3	3.5 ~ 16.0	75	55	0 ~ 6	38 ~ 40	36	HDP-16	0.5	FDC-16	S-4L
5360 13116090	**-90**	3	3.5 ~ 16.0	90	70	0 ~ 6	38 ~ 54	36	HDP-16	0.6		
5360 13116120	**-120**	3	3.5 ~ 16.0	120	100	0 ~ 6	38 ~ 72	36	HDP-16	0.8		
5360 13116150	**-150**	3	3.5 ~ 16.0	150	130	0 ~ 6	38 ~ 86	36	HDP-16	1.0		
5360 13122090	**HSK40A -HDC22A -90**	3	3.5 ~ 22.0	90	70	—	65	46	HDP-22	0.7	FDC-22	S-5L
5360 13122120	**-120**	3	3.5 ~ 22.0	120	100	0 ~ 8	47 ~ 73	46	HDP-22	1.0		
5360 13122150	**-150**	3	3.5 ~ 22.0	150	130	0 ~ 8	47 ~ 103	46	HDP-22	1.4		
5360 14107075	**HSK50A -HDC07A -75**	1	0.5 ~ 7.0	75	49	0 ~ 4	22 ~ 32	23	HDP-07A	0.6	FDC-07	S-0
5360 14107090	**-90**	1	0.5 ~ 7.0	90	64	0 ~ 4	22 ~ 45	23	HDP-07A	0.6		
5360 14107120	**-120**	1	0.5 ~ 7.0	120	94	0 ~ 4	22 ~ 45	23	HDP-07A	0.7		
5360 14109075	**HSK50A -HDC09A -75**	1	2.5 ~ 9.0	75	49	0 ~ 4	27 ~ 31	26	HDP-09	0.6	FDC-09	S-1L
5360 14109090	**-90**	1	2.5 ~ 9.0	90	64	0 ~ 4	27 ~ 47	26	HDP-09	0.6		
5360 14109120	**-120**	1	2.5 ~ 9.0	120	94	0 ~ 4	27 ~ 61	26	HDP-09	0.8		
5360 14112090	**HSK50A -HDC12A -90**	1	2.5 ~ 12.0	90	64	0 ~ 5	33 ~ 42	32	HDP-12	0.7	FDC-12	S-3L
5360 14112120	**-120**	1	2.5 ~ 12.0	120	94	0 ~ 5	33 ~ 71	32	HDP-12	0.9		
5360 14112150	**-150**	1	2.5 ~ 12.0	150	124	0 ~ 5	33 ~ 74	32	HDP-12	1.1		
5360 14116090	**HSK50A -HDC16A -90**	1	3.5 ~ 16.0	90	64	0 ~ 6	38 ~ 50	36	HDP-16	0.8	FDC-16	S-4L
5360 14116120	**-120**	1	3.5 ~ 16.0	120	94	0 ~ 6	38 ~ 65	36	HDP-16	1.0		
5360 14116150	**-150**	1	3.5 ~ 16.0	150	124	0 ~ 6	38 ~ 86	36	HDP-16	1.2		
5360 14122090	**HSK50A -HDC22A -90**	3	3.5 ~ 22.0	90	64	—	60	46	HDP-22	0.9	FDC-22	S-5L
5360 14122120	**-120**	3	3.5 ~ 22.0	120	94	0 ~ 8	47 ~ 63	46	HDP-22	1.2		
5360 14122150	**-150**	3	3.5 ~ 22.0	150	124	0 ~ 8	47 ~ 93	46	HDP-22	1.5		

Inch to Metric (mm) → Inch × 25.4
Metric (mm) to Inch → Metric ÷ 25.4 or Metric × 0.03937

Special / Custom Sizes on request

Unit : Metric

Code	Model	Type	d	L1	L2	B	L3	C1	Nut	kg	Collet	Spanner
5360 15107075	HSK63A -HDC07A -75	1	0.5 ~ 7.0	75	49	0 ~ 4	22 ~ 35	23	HDP-07A	0.8	FDC-07	S-0
5360 15107090	-90	1	0.5 ~ 7.0	90	64	0 ~ 4	22 ~ 45	23	HDP-07A	0.9		
5360 15107120	-120	1	0.5 ~ 7.0	120	94	0 ~ 4	22 ~ 45	23	HDP-07A	1.0		
5360 15107150	-150	1	0.5 ~ 7.0	150	124	0 ~ 4	22 ~ 45	23	HDP-07A	1.0		
5360 15107180	-180	1	0.5 ~ 7.0	180	154	0 ~ 4	22 ~ 45	23	HDP-07A	1.1		
5360 15109075	HSK63A -HDC09A -75	1	2.5 ~ 9.0	75	49	0 ~ 4	27 ~ 34	26	HDP-09	0.9	FDC-09	S-1L
5360 15109090	-90	1	2.5 ~ 9.0	90	64	0 ~ 4	27 ~ 42	26	HDP-09	0.9		
5360 15109120	-120	1	2.5 ~ 9.0	120	94	0 ~ 4	27 ~ 57	26	HDP-09	1.0		
5360 15109150	-150	1	2.5 ~ 9.0	150	124	0 ~ 4	27 ~ 57	26	HDP-09	1.1		
5360 15109180	-180	1	2.5 ~ 9.0	180	154	0 ~ 4	27 ~ 57	26	HDP-09	1.2		
5360 15112075	HSK63A -HDC12A -75	1	2.5 ~ 12.0	75	49	—	48	32	HDP-12	1.0	FDC-12	S-3L
5360 15112090	-90	1	2.5 ~ 12.0	90	64	0 ~ 5	33 ~ 48	32	HDP-12	1.1		
5360 15112120	-120	1	2.5 ~ 12.0	120	94	0 ~ 5	33 ~ 69	32	HDP-12	1.3		
5360 15112150	-150	1	2.5 ~ 12.0	150	124	0 ~ 5	33 ~ 69	32	HDP-12	1.4		
5360 15112180	-180	1	2.5 ~ 12.0	180	154	0 ~ 5	33 ~ 69	32	HDP-12	1.6		
5360 15112210	-210	1	2.5 ~ 12.0	210	184	0 ~ 5	33 ~ 69	32	HDP-12	1.8		
5360 15116075	HSK63A -HDC16A -75	1	3.5 ~ 16.0	75	49	—	48	36	HDP-16	1.0	FDC-16	S-4L
5360 15116090	-90	1	3.5 ~ 16.0	90	64	0 ~ 6	38 ~ 48	36	HDP-16	1.1		
5360 15116120	-120	1	3.5 ~ 16.0	120	94	0 ~ 6	38 ~ 62	36	HDP-16	1.3		
5360 15116150	-150	1	3.5 ~ 16.0	150	124	0 ~ 6	38 ~ 82	36	HDP-16	1.4		
5360 15116180	-180	1	3.5 ~ 16.0	180	154	0 ~ 6	38 ~ 82	36	HDP-16	1.6		
5360 15116210	-210	1	3.5 ~ 16.0	210	184	0 ~ 6	38 ~ 82	36	HDP-16	1.8		
5360 15122090	HSK63A -HDC22A -90	1	3.5 ~ 22.0	90	64	—	63	46	HDP-22	1.2	FDC-22	S-5L
5360 15122120	-120	1	3.5 ~ 22.0	120	94	0 ~ 8	47 ~ 63	46	HDP-22	1.5		
5360 15122150	-150	1	3.5 ~ 22.0	150	124	0 ~ 8	47 ~ 93	46	HDP-22	1.8		
5360 15122180	-180	1	3.5 ~ 22.0	180	154	0 ~ 8	47 ~ 103	46	HDP-22	2.2		
5360 15122210	-210	1	3.5 ~ 22.0	210	184	0 ~ 8	47 ~ 103	46	HDP-22	2.5		
5360 17107075	HSK100A -HDC07A -75	2	0.5 ~ 7.0	75	36	0 ~ 4	22 ~ 27	23	HDP-07A	2.2	FDC-07	S-0
5360 17107090	-90	2	0.5 ~ 7.0	90	51	0 ~ 4	22 ~ 45	23	HDP-07A	2.4		
5360 17107120	-120	2	0.5 ~ 7.0	120	81	0 ~ 4	22 ~ 45	23	HDP-07A	2.4		
5360 17107150	-150	2	0.5 ~ 7.0	150	111	0 ~ 4	22 ~ 45	23	HDP-07A	2.4		
5360 17107180	-180	2	0.5 ~ 7.0	180	141	0 ~ 4	22 ~ 45	23	HDP-07A	2.5		
5360 17109075	HSK100A -HDC09A -75	2	2.5 ~ 9.0	75	36	0 ~ 4	27	26	HDP-09	2.3	FDC-09	S-1L
5360 17109090	-90	2	2.5 ~ 9.0	90	51	0 ~ 4	27 ~ 43	26	HDP-09	2.3		
5360 17109120	-120	2	2.5 ~ 9.0	120	81	0 ~ 4	27 ~ 57	26	HDP-09	2.4		
5360 17109150	-150	2	2.5 ~ 9.0	150	111	0 ~ 4	27 ~ 57	26	HDP-09	2.5		
5360 17109180	-180	2	2.5 ~ 9.0	180	141	0 ~ 4	27 ~ 57	26	HDP-09	2.6		
5360 17112090	HSK100A -HDC12A -90	1	2.5 ~ 12.0	90	61	0 ~ 5	33 ~ 41	32	HDP-12	2.4	FDC-12	S-3L
5360 17112120	-120	1	2.5 ~ 12.0	120	91	0 ~ 5	33 ~ 59	32	HDP-12	2.5		
5360 17112150	-150	1	2.5 ~ 12.0	150	121	0 ~ 5	33 ~ 69	32	HDP-12	2.7		
5360 17112180	-180	1	2.5 ~ 12.0	180	151	0 ~ 5	33 ~ 69	32	HDP-12	2.8		
5360 17112210	-210	1	2.5 ~ 12.0	210	181	0 ~ 5	33 ~ 69	32	HDP-12	3.0		
5360 17116090	HSK100A -HDC16A -90	1	3.5 ~ 16.0	90	61	0 ~ 6	38 ~ 41	36	HDP-16	2.4	FDC-16	S-4L
5360 17116120	-120	1	3.5 ~ 16.0	120	91	0 ~ 6	38 ~ 62	36	HDP-16	2.6		
5360 17116150	-150	1	3.5 ~ 16.0	150	121	0 ~ 6	38 ~ 82	36	HDP-16	2.8		
5360 17116180	-180	1	3.5 ~ 16.0	180	151	0 ~ 6	38 ~ 82	36	HDP-16	3.0		
5360 17116210	-210	1	3.5 ~ 16.0	210	181	0 ~ 6	38 ~ 82	36	HDP-16	3.2		
5360 17122090	HSK100A -HDC22A -90	1	3.5 ~ 22.0	90	61	—	56	46	HDP-22	2.6	FDC-22	S-5L
5360 17122120	-120	1	3.5 ~ 22.0	120	91	0 ~ 8	47 ~ 59	46	HDP-22	2.9		
5360 17122150	-150	1	3.5 ~ 22.0	150	121	0 ~ 8	47 ~ 83	46	HDP-22	3.2		
5360 17122180	-180	1	3.5 ~ 22.0	180	151	0 ~ 8	47 ~ 103	46	HDP-22	3.5		
5360 17122210	-210	1	3.5 ~ 22.0	210	181	0 ~ 8	47 ~ 103	46	HDP-22	3.8		

1.Collet, spanner, hexagon head preset screw, preset screw for semi-dry processing are sold separately. Standard preset screw is included.
2.Refer to P.092 for minimum tool insertion length in case of using our coolant collets (OH,C or MS).
3.L3 indicates dimension when using with a preset screw.
4.See P.499 for standard Tightening Torque.

Collet
P. 086 - 089



Spanner
P. 095



Preset screw
P. 094

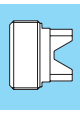

Ordering Example

HSK63A - HDC 09 A - 90

- HSK63A: Shank size
- 09: Max. collet I.D.
- 90: Projection length (L)

Inch to Metric (mm) → Inch × 25.4
Metric (mm) to Inch → Metric ÷ 25.4 or Metric × 0.03937

Special / Custom Sizes on request

SDM

Drill Holder With Easy Tool Length Adjustment

● Projection length of the cutting tool can be adjusted by simply turning circumference of the holder.

Type1

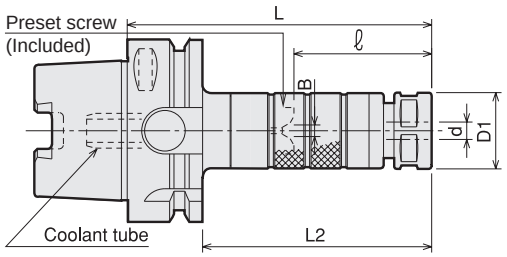

Type2

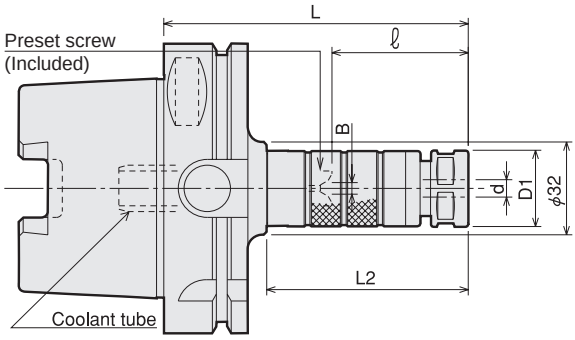

Type3

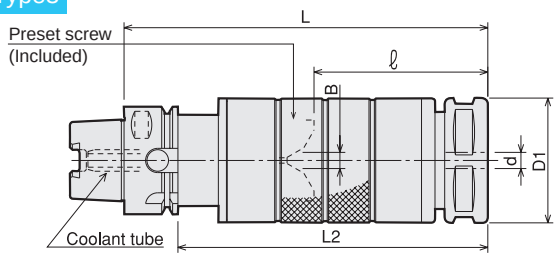

● Coolant tube is included.

Unit : Metric

Code	Model	Type	d	L	ℓ	L2	B	D1	Nut	Collet	Spanner
5710 13007075	**HSK40A -SDM07 -75**	1	0.5 ~ 7.0	75	29 ~ 39	55	0 ~ 4	23	HDP-07A	FDC-07	S-0
5710 13007090	**-90**	1	0.5 ~ 7.0	90	29 ~ 54	70	0 ~ 4	23	HDP-07A		
5710 13007105	**-105**	1	0.5 ~ 7.0	105	29 ~ 54	85	0 ~ 4	23	HDP-07A		
5710 13007120	**-120**	1	0.5 ~ 7.0	120	29 ~ 54	100	0 ~ 4	23	HDP-07A		
5710 13009075	**HSK40A -SDM09 -75**	1	2.5 ~ 9.0	75	28 ~ 38	55	0 ~ 4	26	HDP-09	FDC-09	S-1L
5710 13009090	**-90**	1	2.5 ~ 9.0	90	28 ~ 53	70	0 ~ 4	26	HDP-09		
5710 13009105	**-105**	1	2.5 ~ 9.0	105	28 ~ 53	85	0 ~ 4	26	HDP-09		
5710 13009120	**-120**	1	2.5 ~ 9.0	120	28 ~ 53	100	0 ~ 4	26	HDP-09		
5710 13012090	**HSK40A -SDM12 -90**	1	2.5 ~ 12.0	90	34 ~ 44	70	0 ~ 5	32	HDP-12	FDC-12	S-3L
5710 13012105	**-105**	1	2.5 ~ 12.0	105	34 ~ 59	85	0 ~ 5	32	HDP-12		
5710 13012120	**-120**	1	2.5 ~ 12.0	120	34 ~ 59	100	0 ~ 5	32	HDP-12		
5710 13012135	**-135**	1	2.5 ~ 12.0	135	34 ~ 59	115	0 ~ 5	32	HDP-12		
5710 13012150	**-150**	1	2.5 ~ 12.0	150	34 ~ 59	130	0 ~ 5	32	HDP-12		
5710 13016120	**HSK40A -SDM16 -120**	3	3.5 ~ 16.0	120	40 ~ 50	100	0 ~ 6	36	HDP-16	FDC-16	S-4L
5710 13016135	**-135**	3	3.5 ~ 16.0	135	40 ~ 65	115	0 ~ 6	36	HDP-16		
5710 13016150	**-150**	3	3.5 ~ 16.0	150	40 ~ 65	130	0 ~ 6	36	HDP-16		
5710 13022120	**HSK40A -SDM22 -120**	3	3.5 ~ 22.0	120	48 ~ 58	100	0 ~ 8	46	HDP-22	FDC-22	S-5L
5710 13022135	**-135**	3	3.5 ~ 22.0	135	48 ~ 73	115	0 ~ 8	46	HDP-22		
5710 13022150	**-150**	3	3.5 ~ 22.0	150	48 ~ 73	130	0 ~ 8	46	HDP-22		
5710 14007090	**HSK50A -SDM07 -90**	1	0.5 ~ 7.0	90	29 ~ 39	64	0 ~ 4	23	HDP-07A	FDC-07	S-0
5710 14007105	**-105**	1	0.5 ~ 7.0	105	29 ~ 54	79	0 ~ 4	23	HDP-07A		
5710 14007120	**-120**	1	0.5 ~ 7.0	120	29 ~ 54	94	0 ~ 4	23	HDP-07A		
5710 14009090	**HSK50A -SDM09 -90**	1	2.5 ~ 9.0	90	28 ~ 38	64	0 ~ 4	26	HDP-09	FDC-09	S-1L
5710 14009105	**-105**	1	2.5 ~ 9.0	105	28 ~ 53	79	0 ~ 4	26	HDP-09		
5710 14009120	**-120**	1	2.5 ~ 9.0	120	28 ~ 53	94	0 ~ 4	26	HDP-09		
5710 14012090	**HSK50A -SDM12 -90**	1	2.5 ~ 12.0	90	34 ~ 44	64	0 ~ 5	32	HDP-12	FDC-12	S-3L
5710 14012105	**-105**	1	2.5 ~ 12.0	105	34 ~ 59	79	0 ~ 5	32	HDP-12		
5710 14012120	**-120**	1	2.5 ~ 12.0	120	34 ~ 59	94	0 ~ 5	32	HDP-12		
5710 14012135	**-135**	1	2.5 ~ 12.0	135	34 ~ 59	109	0 ~ 5	32	HDP-12		
5710 14012150	**-150**	1	2.5 ~ 12.0	150	34 ~ 59	124	0 ~ 5	32	HDP-12		
5710 14016105	**HSK50A -SDM16 -105**	1	3.5 ~ 16.0	105	40 ~ 50	79	0 ~ 6	36	HDP-16	FDC-16	S-4L
5710 14016120	**-120**	1	3.5 ~ 16.0	120	40 ~ 65	94	0 ~ 6	36	HDP-16		
5710 14016135	**-135**	1	3.5 ~ 16.0	135	40 ~ 65	109	0 ~ 6	36	HDP-16		
5710 14016150	**-150**	1	3.5 ~ 16.0	150	40 ~ 65	124	0 ~ 6	36	HDP-16		
5710 14022135	**HSK50A -SDM22 -135**	3	3.5 ~ 22.0	135	48 ~ 58	109	0 ~ 8	46	HDP-22	FDC-22	S-5L
5710 14022150	**-150**	3	3.5 ~ 22.0	150	48 ~ 73	124	0 ~ 8	46	HDP-22		

Inch to Metric (mm) → Inch × 25.4
Metric (mm) to Inch → Metric ÷ 25.4 or Metric × 0.03937

Special / Custom Sizes on request

Unit : Metric

Code	Model	Type	d	L	ℓ	L2	B	D1	Nut	Collet	Spanner
5710 15007090	HSK63A -SDM07 -90	1	0.5 ~ 7.0	90	29 ~ 39	64	0 ~ 4	23	HDP-07A	FDC-07	S-0
5710 15007105	-105	1	0.5 ~ 7.0	105	29 ~ 54	79	0 ~ 4	23	HDP-07A		
5710 15007120	-120	1	0.5 ~ 7.0	120	29 ~ 54	94	0 ~ 4	23	HDP-07A		
5710 15007135	-135	1	0.5 ~ 7.0	135	29 ~ 54	109	0 ~ 4	23	HDP-07A		
5710 15007150	-150	1	0.5 ~ 7.0	150	29 ~ 54	124	0 ~ 4	23	HDP-07A		
5710 15009090	HSK63A -SDM09 -90	1	2.5 ~ 9.0	90	28 ~ 38	64	0 ~ 4	26	HDP-09	FDC-09	S-1L
5710 15009105	-105	1	2.5 ~ 9.0	105	28 ~ 53	79	0 ~ 4	26	HDP-09		
5710 15009120	-120	1	2.5 ~ 9.0	120	28 ~ 53	94	0 ~ 4	26	HDP-09		
5710 15009135	-135	1	2.5 ~ 9.0	135	28 ~ 53	109	0 ~ 4	26	HDP-09		
5710 15009150	-150	1	2.5 ~ 9.0	150	28 ~ 53	124	0 ~ 4	26	HDP-09		
5710 15009180	-180	1	2.5 ~ 9.0	180	28 ~ 53	154	0 ~ 4	26	HDP-09		
5710 15012090	HSK63A -SDM12 -90	1	2.5 ~ 12.0	90	34 ~ 44	64	0 ~ 5	32	HDP-12	FDC-12	S-3L
5710 15012105	-105	1	2.5 ~ 12.0	105	34 ~ 59	79	0 ~ 5	32	HDP-12		
5710 15012120	-120	1	2.5 ~ 12.0	120	34 ~ 59	94	0 ~ 5	32	HDP-12		
5710 15012135	-135	1	2.5 ~ 12.0	135	34 ~ 59	109	0 ~ 5	32	HDP-12		
5710 15012150	-150	1	2.5 ~ 12.0	150	34 ~ 59	124	0 ~ 5	32	HDP-12		
5710 15012180	-180	1	2.5 ~ 12.0	180	34 ~ 59	154	0 ~ 5	32	HDP-12		
5710 15016105	HSK63A -SDM16 -105	1	3.5 ~ 16.0	105	40 ~ 50	79	0 ~ 6	36	HDP-16	FDC-16	S-4L
5710 15016120	-120	1	3.5 ~ 16.0	120	40 ~ 65	94	0 ~ 6	36	HDP-16		
5710 15016135	-135	1	3.5 ~ 16.0	135	40 ~ 65	109	0 ~ 6	36	HDP-16		
5710 15016150	-150	1	3.5 ~ 16.0	150	40 ~ 65	124	0 ~ 6	36	HDP-16		
5710 15016180	-180	1	3.5 ~ 16.0	180	40 ~ 65	154	0 ~ 6	36	HDP-16		
5710 15022120	HSK63A -SDM22 -120	1	3.5 ~ 22.0	120	48 ~ 58	94	0 ~ 8	46	HDP-22	FDC-22	S-5L
5710 15022135	-135	1	3.5 ~ 22.0	135	48 ~ 73	109	0 ~ 8	46	HDP-22		
5710 15022150	-150	1	3.5 ~ 22.0	150	48 ~ 73	124	0 ~ 8	46	HDP-22		
5710 15022180	-180	1	3.5 ~ 22.0	180	48 ~ 73	154	0 ~ 8	46	HDP-22		
5710 17007090	HSK100A -SDM07 -90	2	0.5 ~ 7.0	90	29 ~ 39	55	0 ~ 4	23	HDP-07A	FDC-07	S-0
5710 17007105	-105	2	0.5 ~ 7.0	105	29 ~ 54	70	0 ~ 4	23	HDP-07A		
5710 17007120	-120	2	0.5 ~ 7.0	120	29 ~ 54	81	0 ~ 4	23	HDP-07A		
5710 17007135	-135	2	0.5 ~ 7.0	135	29 ~ 54	96	0 ~ 4	23	HDP-07A		
5710 17007150	-150	2	0.5 ~ 7.0	150	29 ~ 54	111	0 ~ 4	23	HDP-07A		
5710 17007165	-165	2	0.5 ~ 7.0	165	29 ~ 54	126	0 ~ 4	23	HDP-07A		
5710 17009090	HSK100A -SDM09 -90	2	2.5 ~ 9.0	90	28 ~ 38	55	0 ~ 4	26	HDP-09	FDC-09	S-1L
5710 17009105	-105	2	2.5 ~ 9.0	105	28 ~ 53	70	0 ~ 4	26	HDP-09		
5710 17009120	-120	2	2.5 ~ 9.0	120	28 ~ 53	81	0 ~ 4	26	HDP-09		
5710 17009135	-135	2	2.5 ~ 9.0	135	28 ~ 53	96	0 ~ 4	26	HDP-09		
5710 17009150	-150	2	2.5 ~ 9.0	150	28 ~ 53	111	0 ~ 4	26	HDP-09		
5710 17009180	-180	2	2.5 ~ 9.0	180	28 ~ 53	141	0 ~ 4	26	HDP-09		
5710 17012105	HSK100A -SDM12 -105	1	2.5 ~ 12.0	105	34 ~ 44	76	0 ~ 5	32	HDP-12	FDC-12	S-3L
5710 17012120	-120	1	2.5 ~ 12.0	120	34 ~ 59	91	0 ~ 5	32	HDP-12		
5710 17012135	-135	1	2.5 ~ 12.0	135	34 ~ 59	106	0 ~ 5	32	HDP-12		
5710 17012150	-150	1	2.5 ~ 12.0	150	34 ~ 59	121	0 ~ 5	32	HDP-12		
5710 17012180	-180	1	2.5 ~ 12.0	180	34 ~ 59	151	0 ~ 5	32	HDP-12		
5710 17016105	HSK100A -SDM16 -105	1	3.5 ~ 16.0	105	40 ~ 50	76	0 ~ 6	36	HDP-16	FDC-16	S-4L
5710 17016120	-120	1	3.5 ~ 16.0	120	40 ~ 65	91	0 ~ 6	36	HDP-16		
5710 17016135	-135	1	3.5 ~ 16.0	135	40 ~ 65	106	0 ~ 6	36	HDP-16		
5710 17016150	-150	1	3.5 ~ 16.0	150	40 ~ 65	121	0 ~ 6	36	HDP-16		
5710 17016180	-180	1	3.5 ~ 16.0	180	40 ~ 65	151	0 ~ 6	36	HDP-16		
5710 17022120	HSK100A -SDM22 -120	1	3.5 ~ 22.0	120	48 ~ 58	91	0 ~ 8	46	HDP-22	FDC-22	S-5L
5710 17022135	-135	1	3.5 ~ 22.0	135	48 ~ 73	106	0 ~ 8	46	HDP-22		
5710 17022150	-150	1	3.5 ~ 22.0	150	48 ~ 73	121	0 ~ 8	46	HDP-22		
5710 17022180	-180	1	3.5 ~ 22.0	180	48 ~ 73	151	0 ~ 8	46	HDP-22		
5710 17022210	-210	1	3.5 ~ 22.0	210	48 ~ 73	181	0 ~ 8	46	HDP-22		

1.Collet and spanner are sold separately.
2. ℓ is the dimension between the cap end and the preset screw top end.
3.See P.499 for standard Tightening Torque.

Collet
P. 086 - 089



Spanner
P. 095



Ordering Example

HSK50A - SDM 12 - 90

- HSK50A: Shank size
- 12: Max. collet I.D.
- 90: Projection length (L)

Inch to Metric (mm) → Inch × 25.4
Metric (mm) to Inch → Metric ÷ 25.4 or Metric × 0.03937

Special / Custom Sizes on request

GDC·A

High-Precision Collet Holder (High-Balanced Type)

● Suitable for high speed rotation drilling, reaming, and finish endmilling.

Type1

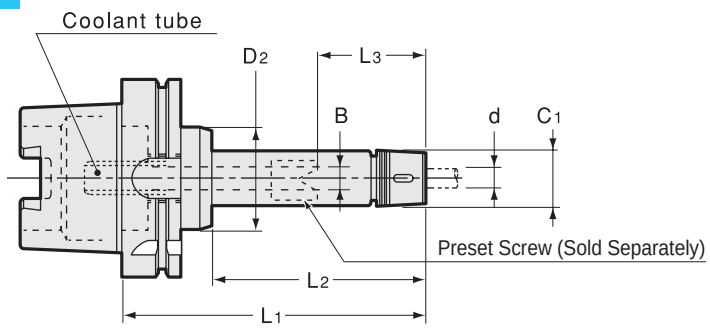

Type2

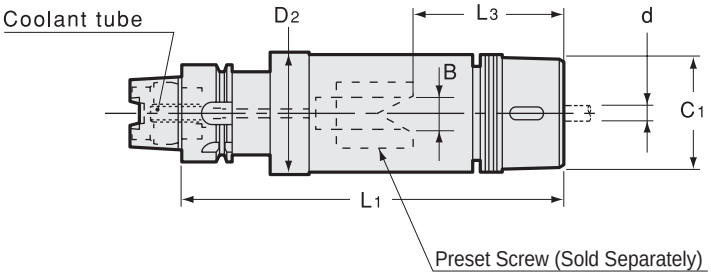

● Coolant tube is included.

Unit : Metric

Code	Model	Type	d	L1	L2	B	L3	D2	C1	Nut	kg	Collet	Spanner
5380 13007075	**HSK40A -GDC07A -75**	1	0.5 ~ 7.0	75	40	0 ~ 4	22 ~ 29	34	23	HDP-07A	0.4	FDC-07AA	S-0
5380 13007090	**-90**	1	0.5 ~ 7.0	90	55	0 ~ 4	22 ~ 44	34	23	HDP-07A			
5380 13007120	**-120**	1	0.5 ~ 7.0	120	85	0 ~ 4	22 ~ 45	34	23	HDP-07A			
5380 13009075	**HSK40A -GDC09A -75**	1	2.5 ~ 9.0	75	40	0 ~ 4	27	34	29	GDP-09	0.5	FDC-09AA	FK-0025
5380 13009090	**-90**	1	2.5 ~ 9.0	90	55	0 ~ 4	27 ~ 40	34	29	GDP-09			
5380 13009120	**-120**	1	2.5 ~ 9.0	120	85	0 ~ 4	27 ~ 57	34	29	GDP-09			
5380 13012090	**HSK40A -GDC12A -90**	2	2.5 ~ 12.0	90	—	—	41	39	34	GDP-12	0.6	FDC-12AA	FK-0034
5380 13012120	**-120**	2	2.5 ~ 12.0	120	—	0 ~ 5	33 ~ 51	39	34	GDP-12	0.8		
5380 13012150	**-150**	2	2.5 ~ 12.0	150	—	0 ~ 5	33 ~ 78	39	34	GDP-12			
5380 13016090	**HSK40A -GDC16A -90**	2	3.5 ~ 16.0	90	—	—	40	42	38	GDP-16	0.7	FDC-16AA	FK-0034
5380 13016120	**-120**	2	3.5 ~ 16.0	120	—	0 ~ 6	38 ~ 46	42	38	GDP-16			
5380 13016150	**-150**	2	3.5 ~ 16.0	150	—	0 ~ 6	38 ~ 74	42	38	GDP-16	1.1		
5380 13022120	**HSK40A -GDC22A -120**	2	3.5 ~ 22.0	120	—	—	68	49	49	GDP-22		FDC-22AA	FK-0045
5380 13022150	**-150**	2	3.5 ~ 22.0	150	—	0 ~ 8	47 ~ 75	49	49	GDP-22			
5380 14007075	**HSK50A -GDC07A -75**	1	0.5 ~ 7.0	75	34	0 ~ 4	22 ~ 24	42	23	HDP-07A		FDC-07AA	S-0
5380 14007090	**-90**	1	0.5 ~ 7.0	90	49	0 ~ 4	22 ~ 39	42	23	HDP-07A			
5380 14007120	**-120**	1	0.5 ~ 7.0	120	79	0 ~ 4	22 ~ 45	42	23	HDP-07A	0.8		
5380 14009075	**HSK50A -GDC09A -75**	1	2.5 ~ 9.0	75	34	0 ~ 4	27 ~ 35	42	29	GDP-09	0.7	FDC-09AA	FK-0025
5380 14009090	**-90**	1	2.5 ~ 9.0	90	49	0 ~ 4	27 ~ 39	42	29	GDP-09	0.7		
5380 14009120	**-120**	1	2.5 ~ 9.0	120	79	0 ~ 4	27 ~ 57	42	29	GDP-09	0.9		
5380 14012090	**HSK50A -GDC12A -90**	1	2.5 ~ 12.0	90	49	—	52	42	34	GDP-12	0.8	FDC-12AA	FK-0034
5380 14012120	**-120**	1	2.5 ~ 12.0	120	79	0 ~ 5	33 ~ 60	42	34	GDP-12	1.0		
5380 14012150	**-150**	1	2.5 ~ 12.0	150	109	0 ~ 5	33 ~ 78	42	34	GDP-12	1.2		
5380 14016090	**HSK50A -GDC16A -90**	1	3.5 ~ 16.0	90	49	—	52	42	38	GDP-16	0.8	FDC-16AA	FK-0034
5380 14016120	**-120**	1	3.5 ~ 16.0	120	79	0 ~ 6	38 ~ 58	42	38	GDP-16	1.0		
5380 14016150	**-150**	1	3.5 ~ 16.0	150	109	0 ~ 6	38 ~ 86	42	38	GDP-16	1.2		
5380 14022120	**HSK50A -GDC22A -120**	2	3.5 ~ 22.0	120	—	—	62	49	49	GDP-22	1.3	FDC-22AA	FK-0045
5380 14022150	**-150**	2	3.5 ~ 22.0	150	—	0 ~ 8	47 ~ 70	49	49	GDP-22	1.6		

Inch to Metric (mm) → Inch × 25.4
Metric (mm) to Inch → Metric ÷ 25.4 or Metric × 0.03937

Special / Custom Sizes on request

Unit : Metric

Code	Model	Type	d	L1	L2	B	L3	D2	C1	Nut	kg	Collet	Spanner
5380 15007075	HSK63A -GDC07A -75	1	0.5 ~ 7.0	75	34	0 ~ 4	22 ~ 35	52	23	HDP-07A	1.0	FDC-07AA	S-0
5380 15007090	-90	1	0.5 ~ 7.0	90	49	0 ~ 4	22 ~ 45	52	23	HDP-07A	1.0		
5380 15007120	-120	1	0.5 ~ 7.0	120	79	0 ~ 4	22 ~ 45	52	23	HDP-07A	1.1		
5380 15009075	HSK63A -GDC09A -75	1	2.5 ~ 9.0	75	34	0 ~ 4	27 ~ 34	52	29	GDP-09	1.0	FDC-09AA	FK-0025
5380 15009090	-90	1	2.5 ~ 9.0	90	49	0 ~ 4	27 ~ 42	52	29	GDP-09	1.1		
5380 15009120	-120	1	2.5 ~ 9.0	120	79	0 ~ 4	27 ~ 57	52	29	GDP-09	1.3		
5380 15012090	HSK63A -GDC12A -90	1	2.5 ~ 12.0	90	49	—	52	52	34	GDP-12	1.1	FDC-12AA	FK-0034
5380 15012120	-120	1	2.5 ~ 12.0	120	79	0 ~ 5	33 ~ 60	52	34	GDP-12	1.3		
5380 15012150	-150	1	2.5 ~ 12.0	150	109	0 ~ 5	33 ~ 78	52	34	GDP-12	1.5		
5380 15016090	HSK63A -GDC16A -90	1	3.5 ~ 16.0	90	49	—	60	52	38	GDP-16	1.2	FDC-16AA	FK-0034
5380 15016120	-120	1	3.5 ~ 16.0	120	79	0 ~ 6	38 ~ 59	52	38	GDP-16	1.4		
5380 15016150	-150	1	3.5 ~ 16.0	150	109	0 ~ 6	38 ~ 82	52	38	GDP-16	1.6		
5380 15022090	HSK63A -GDC22A -90	1	3.5 ~ 22.0	90	49	—	63	52	49	GDP-22	1.2	FDC-22AA	FK-0045
5380 15022120	-120	1	3.5 ~ 22.0	120	79	0 ~ 8	47 ~ 56	52	49	GDP-22	1.6		
5380 15022150	-150	1	3.5 ~ 22.0	150	109	0 ~ 8	47 ~ 86	52	49	GDP-22	1.8		
5380 17007075	HSK100A -GDC07A -75	1	0.5 ~ 7.0	75	31	0 ~ 4	22 ~ 27	84	23	HDP-07A	2.6	FDC-07AA	S-0
5380 17007090	-90	1	0.5 ~ 7.0	90	46	0 ~ 4	22 ~ 45	84	23	HDP-07A	2.7		
5380 17007120	-120	1	0.5 ~ 7.0	120	76	0 ~ 4	22 ~ 45	84	23	HDP-07A	2.9		
5380 17009075	HSK100A -GDC09A -75	1	2.5 ~ 9.0	75	31	0 ~ 4	27 ~ 28	84	29	GDP-09	2.6	FDC-09AA	FK-0025
5380 17009090	-90	1	2.5 ~ 9.0	90	46	0 ~ 4	27 ~ 43	84	29	GDP-09	2.8		
5380 17009120	-120	1	2.5 ~ 9.0	120	76	0 ~ 4	27 ~ 57	84	29	GDP-09	2.9		
5380 17012090	HSK100A -GDC12A -90	1	2.5 ~ 12.0	90	46	—	52	84	34	GDP-12	2.8	FDC-12AA	FK-0034
5380 17012120	-120	1	2.5 ~ 12.0	120	76	0 ~ 5	33 ~ 60	84	34	GDP-12	3.0		
5380 17012150	-150	1	2.5 ~ 12.0	150	106	0 ~ 5	33 ~ 78	84	34	GDP-12	3.2		
5380 17016090	HSK100A -GDC16A -90	1	3.5 ~ 16.0	90	46	0 ~ 6	38 ~ 41	84	38	GDP-16	2.9	FDC-16AA	FK-0034
5380 17016120	-120	1	3.5 ~ 16.0	120	76	0 ~ 6	38 ~ 62	84	38	GDP-16	3.1		
5380 17016150	-150	1	3.5 ~ 16.0	150	106	0 ~ 6	38 ~ 82	84	38	GDP-16	3.3		
5380 17022090	HSK100A -GDC22A -90	1	3.5 ~ 22.0	90	46	—	57	84	49	GDP-22	2.9	FDC-22AA	FK-0045
5380 17022120	-120	1	3.5 ~ 22.0	120	76	0 ~ 8	47 ~ 57	84	49	GDP-22	3.2		
5380 17022150	-150	1	3.5 ~ 22.0	150	106	0 ~ 8	47 ~ 83	84	49	GDP-22	3.5		

1. Collet, preset screw and spanner are sold separately.
2. Always use "AA" class collet.
3. Refer to P.092 for minimum tool insertion length in case of using our coolant collets (OH,C or MS).
4. L3 indicates dimension when using with a preset screw.
5. See P.499 for standard Tightening Torque.

Collet
P. 086 - 089


Spanner
P. 095


Preset screw
P. 094


Ordering Example

HSK50A - GDC 07 A - 90

- HSK50A: Shank size
- 07: Max. collet I.D.
- 90: Projection length (L)

Inch to Metric (mm) → Inch × 25.4
Metric (mm) to Inch → Metric ÷ 25.4 or Metric × 0.03937

Special / Custom Sizes on request

ERC

Collet Holder For Small Diameters

● For drilling in tight space.

Type 1

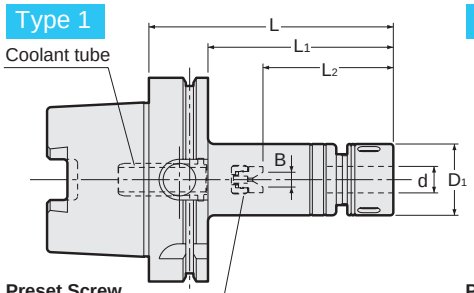

Preset Screw
ERC8 Holder : Sold separately
Other Holder : Included

Type 2

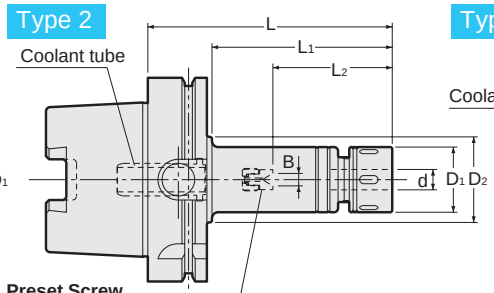

Preset Screw
ERC8 Holder : Sold separately
Other Holder : Included

Type 3

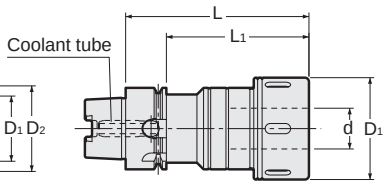

● Coolant tube is included.

Unit : inch

Code	Model	Type	d	L	L1	B	L2	D1	D2	kg	Preset Screw	Nut	Collet	Spanner
5370 00308060	HSK40A -ERC8 -60	1	0.020 ~ 0.197	2.362	1.575	— (0~0.094)	1.299 (0.748~1.220)	0.472	—	0.2	—	ERP-8	ER8	S-8E
5370 00308075	-75	1	0.020 ~ 0.197	2.953	2.165	— (0~0.094)	1.299 (0.748~1.220)	0.472	—	0.2				
5370 00308090	-90	1	0.020 ~ 0.197	3.543	2.756	— (0~0.094)	1.299 (0.748~1.220)	0.472	—	0.3				
5370 00310060	HSK40A -ERC11S -60	1	0.020 ~ 0.276	2.362	1.575	—	1.417	0.630	—	0.2		ERP-11S	ER11	S-11E
5370 00310075	-75	1	0.020 ~ 0.276	2.953	2.165	0.0 ~ 0.157	0.866 ~ 1.378	0.630	—	0.3	HDC07A-ES11			
5370 00310090	-90	1	0.020 ~ 0.276	3.543	2.756	0.0 ~ 0.157	0.866 ~ 1.654	0.630	—	0.3				
5370 00311075	HSK40A -ERC11 -75	1	0.020 ~ 0.276	2.953	2.165	0.0 ~ 0.157	0.866 ~ 1.378	0.906	—	0.3		HDP-07A		S-0
5370 00311090	-90	1	0.020 ~ 0.276	3.543	2.756	0.0 ~ 0.157	0.866 ~ 1.811	0.906	—					
5370 00311120	-120	1	0.020 ~ 0.276	4.724	3.937	0.0 ~ 0.157	0.866 ~ 1.811	0.906	—					
5370 00316075	HSK40A -ERC16 -75	1	0.020 ~ 0.394	2.953	2.165	—	1.811	1.260	—		—	ERP-16	ER16	FK0030
5370 00316090	-90	1	0.020 ~ 0.394	3.543	2.756	0.0 ~ 0.197	1.299 ~ 1.772	1.260	—		ES16			
5370 00316120	-120	1	0.020 ~ 0.394	4.724	3.937	0.0 ~ 0.197	1.299 ~ 2.126	1.260	—					
5370 00320090	HSK40A -ERC20 -90	1	0.020 ~ 0.512	3.543	2.756	—	2.362	1.378	—		—	ERP-20	ER20	FK0034
5370 00320120	-120	1	0.020 ~ 0.512	4.724	3.937	0.0 ~ 0.236	1.496 ~ 2.638	1.378	—		HDS12A-ES20			
5370 00325090	HSK40A -ERC25 -90	1	0.020 ~ 0.630	3.543	2.756	—	2.323	1.654	—		—	ERP-25	ER25	HS-1-16
5370 00325120	-120	1	0.020 ~ 0.630	4.724	3.937	0.0 ~ 0.315	1.693 ~ 2.795	1.654	—		HDS16A-ES25			
5370 00332090	HSK40A -ERC32 -90	3	0.098 ~ 0.787	3.543	2.756	—	2.441	1.969	—		—	ERP-32	ER32	HS-2-20
5370 00508075	HSK63A -ERC8 -75	1	0.020 ~ 0.197	2.953	1.929	— (0~0.094)	1.299 (0.748~1.220)	0.472	—	0.7	—	ERP-8	ER8	S-8E
5370 00508105	-105	1	0.020 ~ 0.197	4.134	3.110	— (0~0.094)	1.299 (0.748~1.220)	0.472	—	0.7				
5370 00510075	HSK63A -ERC11S -75	1	0.020 ~ 0.276	2.953	1.929	0.0 ~ 0.157	0.866 ~ 1.260	0.630	—	0.7		ERP-11S	ER11	S-11E
5370 00510105	-105	1	0.020 ~ 0.276	4.134	3.110	0.0 ~ 0.157	0.866 ~ 1.654	0.630	—	0.8				
5370 00511075	HSK63A -ERC11 -75	1	0.020 ~ 0.276	2.953	1.929	0.0 ~ 0.157	0.866 ~ 1.260	0.906	—		HDC07A-ES11			
5370 00511090	-90	1	0.020 ~ 0.276	3.543	2.520	0.0 ~ 0.157	0.866 ~ 1.654	0.906	—	0.8		HDP-07A		S-0
5370 00511120	-120	1	0.020 ~ 0.276	4.724	3.701	0.0 ~ 0.157	0.866 ~ 1.654	0.906	—					
5370 00516075	HSK63A -ERC16 -75	1	0.020 ~ 0.394	2.953	1.929	—	1.811	1.260	—	0.9	—	ERP-16	ER16	FK0030
5370 00516090	-90	1	0.020 ~ 0.394	3.543	2.520	0.0 ~ 0.197	1.299 ~ 1.575	1.260	—		ES16			
5370 00516105	-105	1	0.020 ~ 0.394	4.134	3.110	0.0 ~ 0.197	1.299 ~ 2.126	1.260	—	1.1				
5370 00516120	-120	1	0.020 ~ 0.394	4.724	3.701	0.0 ~ 0.197	1.299 ~ 2.126	1.260	—	1.2				
5370 00516165	-165	1	0.020 ~ 0.394	6.496	5.472	0.0 ~ 0.197	1.299 ~ 2.126	1.260	—					

Inch to Metric (mm) → Inch × 25.4
Metric (mm) to Inch → Metric ÷ 25.4 or Metric × 0.03937

Special / Custom Sizes on request

Unit : inch

Code	Model	Type	d	L	L1	B	L2	D1	D2	kg	Preset Screw	Nut	Collet	Spanner
5370 00520090	HSK63A -ERC20 -90	1	0.020 ~ 0.512	3.543	2.520	—	2.165	1.378	—		—	ERP-20	ER20	FK0034
5370 00520120	-120	1	0.020 ~ 0.512	4.724	3.701	0.0 ~ 0.236	1.496 ~ 2.559	1.378	—		HDS12A-ES20			
5370 00520150	-150	1	0.020 ~ 0.512	5.906	4.882	0.0 ~ 0.236	1.496 ~ 2.638	1.378	—					
5370 00525075	HSK63A -ERC25 -75	1	0.020 ~ 0.630	2.953	1.929	—	1.732	1.654	—		—	ERP-25	ER25	HS-1-16
5370 00525090	-90	1	0.020 ~ 0.630	3.543	2.520	—	2.323	1.654	—					
5370 00525120	-120	1	0.020 ~ 0.630	4.724	3.701	0.0 ~ 0.315	1.693 ~ 2.598	1.654	—	1.4	HDS16A-ES25			
5370 00525150	-150	1	0.020 ~ 0.630	5.906	4.882	0.0 ~ 0.315	1.693 ~ 3.150	1.654	—					
5370 00532090	HSK63A -ERC32 -90	1	0.079 ~ 0.787	3.543	2.520	—	2.244	1.969	—		—	ERP-32	ER32	HS-2-20
5370 00532105	-105	1	0.079 ~ 0.787	4.134	3.110	—	2.638	1.969	—	1.5				
5370 00532120	-120	1	0.079 ~ 0.787	4.724	3.701	0.0 ~ 0.394	1.969 ~ 2.323	1.969	—	1.7	HDS22A-ES32			
5370 00532150	-150	1	0.079 ~ 0.787	5.906	4.882	0.0 ~ 0.394	1.969 ~ 3.504	1.969	—					
5370 00540120	HSK63A -ERC40 -120	1	0.118 ~ 1.024	4.724	3.701	—	3.150	2.480	—		—	ERP-40	ER40	HS-2.5-25
5370 00711075	HSK100A -ERC11 -75	2	0.020 ~ 0.276	2.953	1.417	—	1.496	0.906	1.260		—	HDP-07A	ER11	S-0
5370 00711090	-90	2	0.020 ~ 0.276	3.543	2.008	0.0 ~ 0.157	0.866 ~ 1.654	0.906	1.260		HDS07A-ES11			
5370 00711120	-120	2	0.020 ~ 0.276	4.724	3.189	0.0 ~ 0.157	0.866 ~ 1.654	0.906	1.260					
5370 00716075	HSK100A -ERC16 -75	2	0.020 ~ 0.394	2.953	1.693	—	1.654	1.260	1.654		—	ERP-16	ER16	FK0030
5370 00716090	-90	2	0.020 ~ 0.394	3.543	2.283	0.0 ~ 0.197	1.299 ~ 1.457	1.260	1.654		ES16			
5370 00716120	-120	2	0.020 ~ 0.394	4.724	3.465	0.0 ~ 0.197	1.299 ~ 2.126	1.260	1.654					
5370 00720090	HSK100A -ERC20 -90	1	0.020 ~ 0.512	3.543	2.402	—	2.087	1.378	—		—	ERP-20	ER20	FK0034
5370 00720120	-120	1	0.020 ~ 0.512	4.724	3.583	0.0 ~ 0.236	1.496 ~ 2.323	1.378	—		HDS12A-ES20			
5370 00720150	-150	1	0.020 ~ 0.512	5.906	4.764	0.0 ~ 0.236	1.496 ~ 2.638	1.378	—					
5370 00725090	HSK100A -ERC25 -90	1	0.020 ~ 0.630	3.543	2.402	—	2.087	1.654	—		—	ERP-25	ER25	HS-1-16
5370 00725120	-120	1	0.020 ~ 0.630	4.724	3.583	0.0 ~ 0.315	1.693 ~ 2.362	1.654	—		HDS16A-ES25			
5370 00725150	-150	1	0.020 ~ 0.630	5.906	4.764	0.0 ~ 0.315	1.693 ~ 3.150	1.654	—					
5370 00732090	HSK100A -ERC32 -90	1	0.098 ~ 0.787	3.543	2.402	—	2.008	1.969	—		—	ERP-32	ER32	HS-2-20
5370 00732105	-105	1	0.098 ~ 0.787	4.134	2.992	—	2.598	1.969	—	2.8				
5370 00732120	-120	1	0.098 ~ 0.787	4.724	3.583	0.0 ~ 0.394	1.969 ~ 2.126	1.969	—		HDS22A-ES32			
5370 00732150	-150	1	0.098 ~ 0.787	5.906	4.764	0.0 ~ 0.394	1.969 ~ 3.307	1.969	—	3.4				
5370 00740120	HSK100A -ERC40 -120	1	0.118 ~ 1.024	4.724	3.583	—	2.913	2.480	—	3.5	—	ERP-40	ER40	HS-2.5-25
5370 00750135	HSK100A -ERC50 -135	1	0.394 ~ 1.339	5.315	4.173	—	3.307	3.071	—		—	ERP-50	ER50	HS-4-42

1.Collet and spanner are sold separately.
2.ES8, a preset screw for ERC8, is sold separately. ERC11S includes a standard preset screw HDS-07A-ES11.
3." B " and "L2 " dimensions in brackets are for using ES8 preset screw.
4.Refer to P.092 for minimum tool insertion length in case of using our coolant collets.
5.See P.499 for standard Tightening Torque.

Collet
P. 090-091


Spanner
P. 095


Preset screw
P. 094
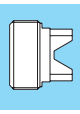

Ordering Example

HSK63A - **ERC** **8** - **75**

HSK63A: Shank size
8: Max. collet I.D.
75: Projection length (L)

Inch to Metric (mm) → Inch × 25.4
Metric (mm) to Inch → Metric ÷ 25.4 or Metric × 0.03937

Special / Custom Sizes on request

ERC-T

Collet Holder For Small Diameters (Taper Type)

● For drilling in tight space.

Preset Screw
ERC8 Holder : Sold separately
Other Holder : Included

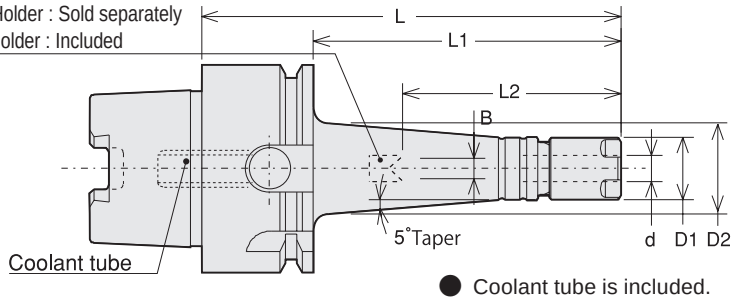

● Coolant tube is included.

Unit : Metric

Code	Model	d	L	L1	B	L2	D1	D2	Nut	kg	Collet	Spanner
5370 01308060	HSK40A -ERC8 -60T	0.5 ~ 5.0	60	40	—	34	12	15	ERP-8	0.3	ER8	S-8E
5370 01308075	-75T	0.5 ~ 5.0	75	55	— (0 ~ 2.4)	34 (19 ~ 31)	12	17.5	ERP-8	0.3		
5370 01308090	-90T	0.5 ~ 5.0	90	70	— (0 ~ 2.4)	34 (19 ~ 31)	12	20.5	ERP-8	0.3		
5370 01308105	-105T	0.5 ~ 5.0	105	85	— (0 ~ 2.4)	34 (19 ~ 31)	12	23	ERP-8	0.4		
5370 01310060	HSK40A -ERC11S -60T	0.5 ~ 7.0	60	40	0 ~ 4	22 ~ 24	16	19	ERP-11S	0.3	FDC-07	S-11E
5370 01310075	-75T	0.5 ~ 7.0	75	55	0 ~ 4	22 ~ 38	16	21.5	ERP-11S	0.4		
5370 01310090	-90T	0.5 ~ 7.0	90	70	0 ~ 4	22 ~ 45	16	24	ERP-11S	0.4		
5370 01310090	-105T	0.5 ~ 7.0	105	85	0 ~ 4	22 ~ 45	16	26.5	ERP-11S	0.4		
5370 01408075	HSK50A -ERC8 -75T	0.5 ~ 5.0	75	49	— (0 ~ 2.4)	34 (19 ~ 30)	12	16.5	ERP-8	0.5	ER8	S-8E
5370 01408090	-90T	0.5 ~ 5.0	90	64	— (0 ~ 2.4)	34 (19 ~ 31)	12	19.5	ERP-8	0.5		
5370 01408105	-105T	0.5 ~ 5.0	105	79	— (0 ~ 2.4)	34 (19 ~ 31)	12	22	ERP-8	0.5		
5370 01410075	HSK50A -ERC11S -75T	0.5 ~ 7.0	75	49	0 ~ 4	22 ~ 32	16	20.5	ERP-11S	0.6	FDC-07	S-11E
5370 01410090	-90T	0.5 ~ 7.0	90	64	0 ~ 4	22 ~ 45	16	23	ERP-11S	0.6		
5370 01410105	-105T	0.5 ~ 7.0	105	79	0 ~ 4	22 ~ 45	16	25.5	ERP-11S	0.7		
5370 01508060	HSK63A -ERC8 -60T	0.5 ~ 5.0	60	34	—	34	12	14	ERP-8	0.7	ER8	S-8E
5370 01508075	-75T	0.5 ~ 5.0	75	49	— (0 ~ 2.4)	34 (19 ~ 28)	12	16.5	ERP-8	0.8		
5370 01508090	-90T	0.5 ~ 5.0	90	64	— (0 ~ 2.4)	34 (19 ~ 31)	12	19.5	ERP-8	0.8		
5370 01508105	-105T	0.5 ~ 5.0	105	79	— (0 ~ 2.4)	34 (19 ~ 31)	12	22	ERP-8	0.8		
5370 01508120	-120T	0.5 ~ 5.0	120	94	— (0 ~ 2.4)	34 (19 ~ 31)	12	24.5	ERP-8	0.9		
5370 01508135	-135T	0.5 ~ 5.0	135	109	— (0 ~ 2.4)	34 (19 ~ 31)	12	27	ERP-8	0.9		
5370 01510060	HSK63A -ERC11S -60T	0.5 ~ 7.0	60	34	—	22 ~ 24	16	18	ERP-11S	0.7	FDC-07	S-11E
5370 01510075	-75T	0.5 ~ 7.0	75	49	0 ~ 4	22 ~ 38	16	20.5	ERP-11S	0.8		
5370 01510090	-90T	0.5 ~ 7.0	90	64	0 ~ 4	22 ~ 45	16	23	ERP-11S	0.8		
5370 01510105	-105T	0.5 ~ 7.0	105	79	0 ~ 4	22 ~ 45	16	25.5	ERP-11S	0.9		
5370 01510120	-120T	0.5 ~ 7.0	120	94	0 ~ 4	22 ~ 45	16	28.5	ERP-11S	0.9		
5370 01510135	-135T	0.5 ~ 7.0	135	109	0 ~ 4	22 ~ 45	16	31	ERP-11S	1.0		

1.Collet and spanner are sold separately.
2.ES8, a preset screw for ERC8-T, is sold separately. ERC11S-T includes a standard preset screw HDS-07A-ES11.
3." B " and " L2 " dimensions in brackets are for using ES8 preset screw.
4.Refer to P.092 for minimum tool insertion length in case of using our coolant collets.
5.See P.499 for standard Tightening Torque.

Collet
P. 090-091
Spanner
P. 095
Preset screw
P. 094



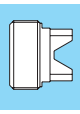

Ordering Example

HSK40A - **ERC** **8** - **105** **T**
Shank size | Max. collet I.D. | Projection length (L)

Inch to Metric (mm) → Inch × 25.4
Metric (mm) to Inch → Metric ÷ 25.4 or Metric × 0.03937

Special / Custom Sizes on request

MEMO

HDZ

"R"Zero Holder

● Runout accuracy of the cutting edge can be adjusted as closely as to zero.

Type1

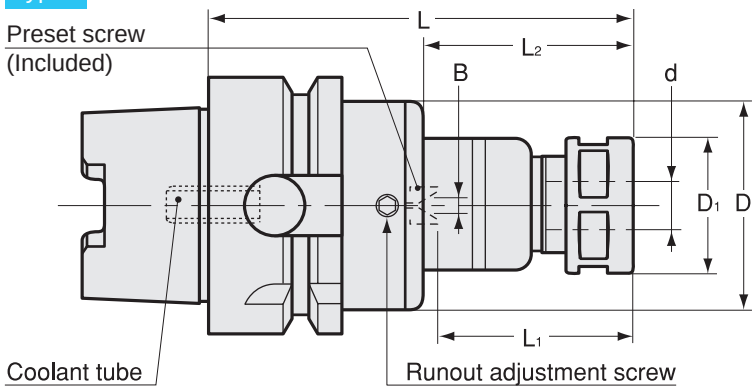

Type2

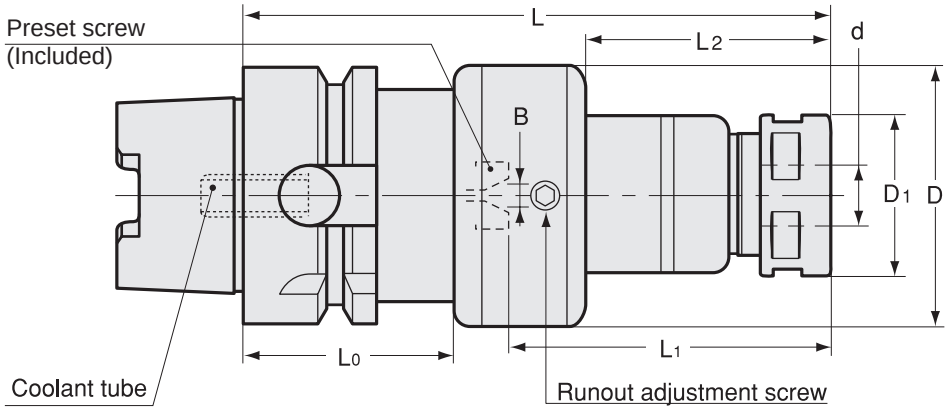

● Coolant tube is included.

Unit : Metric

Code	Model	Type	d	L	L1	L2	B	D	D1	L0	Nut	kg	Collet	Spanner	Wrench
5650 13007075	**HSK40A -HDZ07 -75**	1	0.5 ~ 7.0	75	22 ~ 38	39	0 ~ 4	34	23	–	HDP-07A		FDC-07	S-0	L-3T
5650 13007090	**-90**	1	0.5 ~ 7.0	90	22 ~ 49	54	0 ~ 4	34	23	–	HDP-07A				
5650 13007120	**-120**	1	0.5 ~ 7.0	120	22 ~ 49	84	0 ~ 4	34	23	–	HDP-07A	0.5			
5650 13009090	**HSK40A -HDZ09 -90**	2	2.5 ~ 9.0	90	27 ~ 46	34	0 ~ 4	41	26	35	HDP-09	0.6	FDC-09	S-1L	L-3T
5650 13009120	**-120**	2	2.5 ~ 9.0	120	27 ~ 61	64	0 ~ 4	41	26	35	HDP-09				
5650 13012090	**HSK40A -HDZ12 -90**	2	2.5 ~ 12.0	90	33 ~ 51	30	0 ~ 5	52	32	35	HDP-12	0.8	FDC-12	S-3L	L-4T
5650 13012120	**-120**	2	2.5 ~ 12.0	120	33 ~ 74	60	0 ~ 5	52	32	35	HDP-12	1.0			
5650 13012150	**-150**	2	2.5 ~ 12.0	150	33 ~ 74	90	0 ~ 5	52	32	35	HDP-12				
5650 13016090	**HSK40A -HDZ16 -90**	2	3.5 ~ 16.0	90	38 ~ 54	30	0 ~ 6	56	36	35	HDP-16	0.9	FDC-16	S-4L	L-4T
5650 13016120	**-120**	2	3.5 ~ 16.0	120	38 ~ 72	60	0 ~ 6	56	36	35	HDP-16	1.1			
5650 13016150	**-150**	2	3.5 ~ 16.0	150	38 ~ 86	90	0 ~ 6	56	36	35	HDP-16				
5650 14007075	**HSK50A -HDZ07 -75**	1	0.5 ~ 7.0	75	22 ~ 32	33	0 ~ 4	41	23	–	HDP-07A		FDC-07	S-0	L-3T
5650 14007090	**-90**	1	0.5 ~ 7.0	90	22 ~ 45	48	0 ~ 4	41	23	–	HDP-07A	0.7			
5650 14007120	**-120**	1	0.5 ~ 7.0	120	22 ~ 45	78	0 ~ 4	41	23	–	HDP-07A	0.8			
5650 14009075	**HSK50A -HDZ09 -75**	1	2.5 ~ 9.0	75	27 ~ 31	33	0 ~ 4	41	26	–	HDP-09		FDC-09	S-1L	L-3T
5650 14009090	**-90**	1	2.5 ~ 9.0	90	27 ~ 47	48	0 ~ 4	41	26	–	HDP-09	0.7			
5650 14009120	**-120**	1	2.5 ~ 9.0	120	27 ~ 61	78	0 ~ 4	41	26	–	HDP-09	0.8			
5650 14012090	**HSK50A -HDZ12 -90**	2	2.5 ~ 12.0	90	33 ~ 42	23	0 ~ 5	52	32	42	HDP-12	1.0	FDC-12	S-3L	L-4T
5650 14012120	**-120**	2	2.5 ~ 12.0	120	33 ~ 71	53	0 ~ 5	52	32	42	HDP-12	1.2			
5650 14012150	**-150**	2	2.5 ~ 12.0	150	33 ~ 74	83	0 ~ 5	52	32	42	HDP-12	1.4			
5650 14016090	**HSK50A -HDZ16 -90**	2	3.5 ~ 16.0	90	38 ~ 50	23	0 ~ 6	56	36	42	HDP-16	1.1	FDC-16	S-4L	L-4T
5650 14016120	**-120**	2	3.5 ~ 16.0	120	38 ~ 65	53	0 ~ 6	56	36	42	HDP-16	1.3			
5650 14016150	**-150**	2	3.5 ~ 16.0	150	38 ~ 86	83	0 ~ 6	56	36	42	HDP-16	1.5			

Inch to Metric (mm) → Inch × 25.4
Metric (mm) to Inch → Metric ÷ 25.4 or Metric × 0.03937

Special / Custom Sizes on request

Unit : Metric

Code	Model	Type	d	L	L1	L2	B	D	D1	L0	Nut	kg	Collet	Spanner	Wrench
5650 15007075	HSK63A -HDZ07 -75	1	0.5 ~ 7.0	75	22 ~ 35	33	0 ~ 4	41	23	–	HDP-07A	0.9	FDC-07	S-0	L-3T
5650 15007090	-90	1	0.5 ~ 7.0	90	22 ~ 45	48	0 ~ 4	41	23	–	HDP-07A				
5650 15007120	-120	1	0.5 ~ 7.0	120	22 ~ 45	78	0 ~ 4	41	23	–	HDP-07A				
5650 15009075	HSK63A -HDZ09 -75	1	2.5 ~ 9.0	75	27 ~ 34	33	0 ~ 4	45	26	–	HDP-09	1.0	FDC-09	S-1L	L-3T
5650 15009090	-90	1	2.5 ~ 9.0	90	27 ~ 42	48	0 ~ 4	45	26	–	HDP-09	1.0			
5650 15009120	-120	1	2.5 ~ 9.0	120	27 ~ 57	78	0 ~ 4	45	26	–	HDP-09				
5650 15012090	HSK63A -HDZ12 -90	1	2.5 ~ 12.0	90	33 ~ 48	44	0 ~ 5	52	32	–	HDP-12	1.2	FDC-12	S-3L	L-4T
5650 15012120	-120	1	2.5 ~ 12.0	120	33 ~ 69	74	0 ~ 5	52	32	–	HDP-12	1.3			
5650 15012150	-150	1	2.5 ~ 12.0	150	33 ~ 69	104	0 ~ 5	52	32	–	HDP-12	1.5			
5650 15016090	HSK63A -HDZ16 -90	2	3.5 ~ 16.0	90	38 ~ 48	28	0 ~ 6	56	36	42	HDP-16	1.4	FDC-16	S-4L	L-4T
5650 15016120	-120	2	3.5 ~ 16.0	120	38 ~ 62	58	0 ~ 6	56	36	42	HDP-16	1.6			
5650 15016150	-150	2	3.5 ~ 16.0	150	38 ~ 82	88	0 ~ 6	56	36	42	HDP-16	1.8			
5650 15022120	HSK63A -HDZ22 -120	2	3.5 ~ 22.0	120	47 ~ 63	49	0 ~ 8	69	46	42	HDP-22	2.0	FDC-22	S-5L	L-5T
5650 15022150	-150	2	3.5 ~ 22.0	150	47 ~ 93	79	0 ~ 8	69	46	42	HDP-22	2.3			
5650 17007075	HSK100A -HDZ07 -75	1	0.5 ~ 7.0	75	22 ~ 27	26	0 ~ 4	41	23	–	HDP-07A		FDC-07	S-0	L-3T
5650 17007090	-90	1	0.5 ~ 7.0	90	22 ~ 45	41	0 ~ 4	41	23	–	HDP-07A				
5650 17007120	-120	1	0.5 ~ 7.0	120	22 ~ 45	71	0 ~ 4	41	23	–	HDP-07A				
5650 17009075	HSK100A -HDZ09 -75	1	2.5 ~ 9.0	75	27 ~ 28	26	0 ~ 4	45	26	–	HDP-09		FDC-09	S-1L	L-3T
5650 17009090	-90	1	2.5 ~ 9.0	90	27 ~ 47	41	0 ~ 4	45	26	–	HDP-09	2.4			
5650 17009120	-120	1	2.5 ~ 9.0	120	27 ~ 57	71	0 ~ 4	45	26	–	HDP-09				
5650 17012090	HSK100A -HDZ12 -90	1	2.5 ~ 12.0	90	33 ~ 41	41	0 ~ 5	56	32	–	HDP-12	2.6	FDC-12	S-3L	L-4T
5650 17012120	-120	1	2.5 ~ 12.0	120	33 ~ 59	71	0 ~ 5	56	32	–	HDP-12				
5650 17012150	-150	1	2.5 ~ 12.0	150	33 ~ 69	101	0 ~ 5	56	32	–	HDP-12	2.9			
5650 17016090	HSK100A -HDZ16 -90	1	3.5 ~ 16.0	90	38 ~ 41	41	0 ~ 6	62	36	–	HDP-16	2.7	FDC-16	S-4L	L-4T
5650 17016120	-120	1	3.5 ~ 16.0	120	38 ~ 62	71	0 ~ 6	62	36	–	HDP-16				
5650 17016150	-150	1	3.5 ~ 16.0	150	38 ~ 82	101	0 ~ 6	62	36	–	HDP-16				
5650 17022090	HSK100A -HDZ22 -90	1	3.5 ~ 22.0	90	56	37	–	76	46	–	HDP-22	3.0	FDC-22	S-5L	L-5T
5650 17022120	-120	1	3.5 ~ 22.0	120	47 ~ 59	67	0 ~ 8	76	46	–	HDP-22	3.4			
5650 17022150	-150	1	3.5 ~ 22.0	150	47 ~ 83	97	0 ~ 8	76	46	–	HDP-22				

1.Collet, spanner, hexagon head preset screw, preset screw for semi-dry processing, and adjustment wrench are sold separately. Standard preset screw is included.
2.Refer to P.092 for minimum tool insertion length in case of using our coolant collets (OH,C or MS).
3.L1 indicates dimension when using with a preset screw.
4.See P.499 for standard Tightening Torque.

Collet P. 086 - 089

Spanner P. 095

Preset screw P. 094

Adjustment wrench P. 095





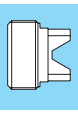



Ordering Example

HSK40A - **HDZ** **12** - **90**

HSK40A: Shank size
12: Max. collet I.D.
90: Projection length (L)

CTZ

"R"Zero Holder for Large Diamater

● Runout of the cutting edge can be adjusted as close as to zero.Suitable for large diameter reaming.

Type1

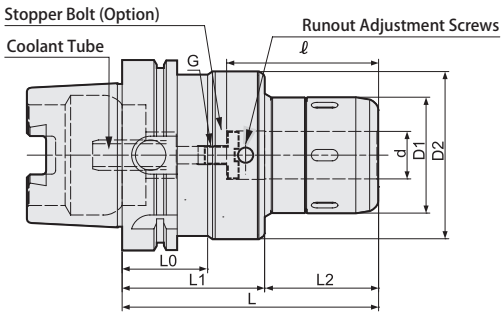

Type2

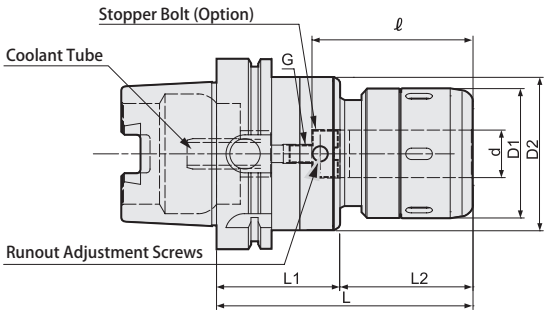

Caution

Please rotate the clamping ring counterclockwise more than 360 degrees after a cutting tool is removed.

● Coolant tube is included.

Metric Sizes

Unit : Metric

Code	Model	Type	d	L	L1	L2	D1	D2	L0	ℓ	G	Spanner	Wrench
589015125135	HSK63A -CTZ25A -135 * 1	1	25	135	71	64	61	74	42	80	M8 P=1.25	HS-2.5-25	L-6L (Included)
589015125150	-150 * 1	1	25	150	71	79	61	74	42	80	M8 P=1.25		
589015132135	HSK63A -CTZ32A -135 * 1	1	32	135	71	64	68	80	42	105	M8 P=1.25	HS-3-32	
589015132150	-150 * 1	1	32	150	71	79	68	80	42	120	M8 P=1.25		
589017125135	HSK100A -CTZ25A -135	2	25	135	65	70	61	74	-	80	M10 P=1.5	HS-2.5-25	
589017125150	-150	2	25	150	65	85	61	74	-	80	M10 P=1.5		
589017132135	HSK100A -CTZ32A -135 * 1	2	32	135	65	70	68	80	-	100	M10 P=1.5	HS-3-32	
589017132150	-150 * 1	2	32	150	65	85	68	80	-	115	M10 P=1.5		
589017042135	HSK100A -CTZ42 -135 * 2	1	42	135	76	59	88	99	45	100	M10 P=1.5	HS-4-42	
589017042150	-150 * 2	1	42	150	76	74	88	99	45	110	M10 P=1.5		

1. When ordering, indicate number of spanners required. "No charge" spanners are limited to number of holders on order.
2. A wrench is included.
3. The model with "*1" and "*2" are not compatible with some accessories.
   For more information about the accessories, please refer below chart.

Ordering Example

HSK63A - CTZ 32 A - 135

HSK63A: Shank size; 32: I.D. (d); 135: Projection length (L)

Spanner

P. 069



Accessories

Models with * 1 - * 2 cannot be used with some accessories due to short ℓ length.

	Stopper Bolt	Straight Collet		Morse Taper Adapter		Jacobs Adapter	
	BL (P.295)	MC (P.066)	MCA (P.067)	MA (P.068)	MAB (P.068)	JA (P.069)	JAB (P.069)
* 1	Yes	Yes	No	Yes	Yes	Yes	Yes
* 2	Yes	Yes	No	No	No	No	No

Min. chucking length

Direct Chucking (without MC Collet)

I.D.of Chuck	Min. chucking length
25,32,42	50

With MC Collet

Collet I.D.	Min. chucking length	
	MC	MC-C、MC-OH
6,8	30	30
10,12	40	40
16,20	45	45
25	50	50
32	50	60

Inch to Metric (mm) → Inch × 25.4
Metric (mm) to Inch → Metric ÷ 25.4 or Metric × 0.03937

Special / Custom Sizes on request

GDZ

"R"Zero Holder (High-Balanced Type)

● Runout accuracy of the cutting edge can be adjusted as closely as to zero. (High-balanced type)

Type1

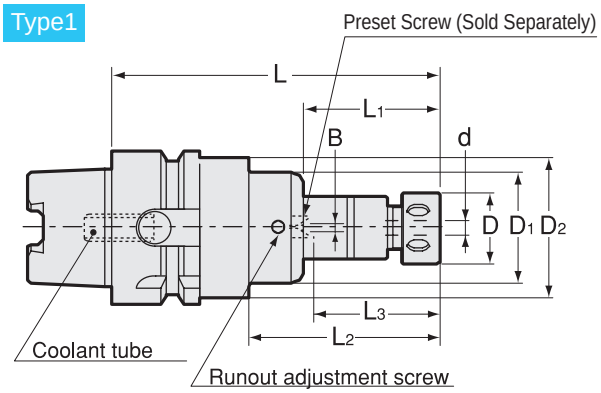

Type2

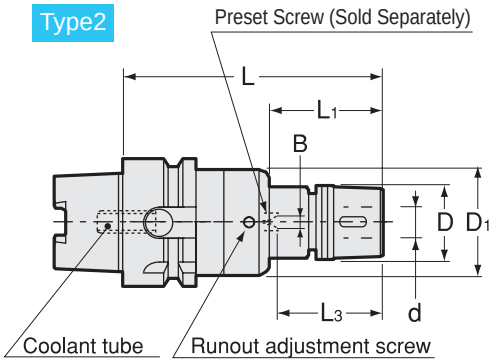

Type3

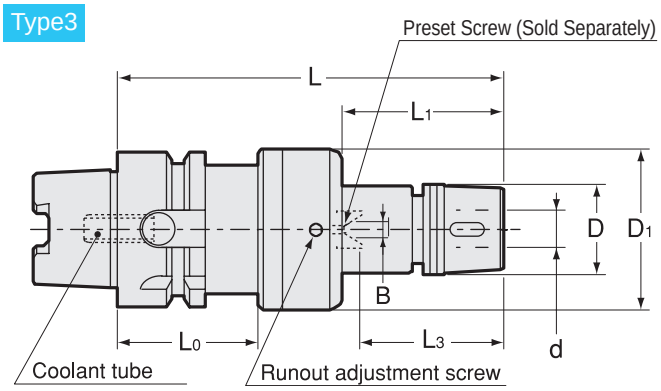

● Coolant tube is included.

Unit : Metric

Code	Model	Type	d	L	L1	L2	L3	D	D1	D2	L0	Nut	kg	Collet	Spanner	Wrench
5670 13007075	HSK40A -GDZ07 -75	2	0.5 ~ 7.0	75	30	–	22 ~ 30	23	34	–	–	HDP-07A				
5670 13007090	-90	2	0.5 ~ 7.0	90	45	–	22 ~ 45	23	34	–	–	HDP-07A	0.5	FDC-07AA	S-0	L-3T
5670 13007120	-120	2	0.5 ~ 7.0	120	75	–	22 ~ 45	23	34	–	–	HDP-07A				
5670 13009090	HSK40A -GDZ09 -90	3	2.5 ~ 9.0	90	28	–	27 ~ 42	29	41	–	35	GDP-09				
5670 13009120	-120	3	2.5 ~ 9.0	120	58	–	27 ~ 57	29	41	–	35	GDP-09		FDC-09AA	FK-0025	L-3T
5670 13009135	-135	3	2.5 ~ 9.0	135	73	–	27 ~ 57	29	41	–	35	GDP-09				
5670 13012105	HSK40A -GDZ12 -105	3	2.5 ~ 12.0	105	39	–	33 ~ 54	34	52	–	35	GDP-12				
5670 13012120	-120	3	2.5 ~ 12.0	120	54	–	33 ~ 69	34	52	–	35	GDP-12		FDC-12AA	FK-0034	L-4T
5670 13012150	-150	3	2.5 ~ 12.0	150	84	–	33 ~ 69	34	52	–	35	GDP-12				
5670 13016105	HSK40A -GDZ16 -105	3	3.5 ~ 16.0	105	39	–	38 ~ 57	38	56	–	35	GDP-16				
5670 13016120	-120	3	3.5 ~ 16.0	120	54	–	38 ~ 72	38	56	–	35	GDP-16		FDC-16AA	FK-0034	L-4T
5670 13016150	-150	3	3.5 ~ 16.0	150	84	–	38 ~ 82	38	56	–	35	GDP-16				
5670 14007090	HSK50A -GDZ07 -90	2	0.5 ~ 7.0	90	39	–	22 ~ 45	23	41	–	–	HDP-07A				
5670 14007120	-120	2	0.5 ~ 7.0	120	69	–	22 ~ 45	23	41	–	–	HDP-07A		FDC-07AA	S-0	L-3T
5670 14007135	-135	2	0.5 ~ 7.0	135	84	–	22 ~ 45	23	41	–	–	HDP-07A				
5670 14009090	HSK50A -GDZ09 -90	2	2.5 ~ 9.0	90	39	–	27 ~ 46	29	41	–	–	GDP-09				
5670 14009120	-120	2	2.5 ~ 9.0	120	69	–	27 ~ 57	29	41	–	–	GDP-09		FDC-09AA	FK-0025	L-3T
5670 14009135	-135	2	2.5 ~ 9.0	135	84	–	27 ~ 57	29	41	–	–	GDP-09				
5670 14012105	HSK50A -GDZ12 -105	3	2.5 ~ 12.0	105	32	–	33 ~ 58	34	52	–	42	GDP-12				
5670 14012120	-120	3	2.5 ~ 12.0	120	47	–	33 ~ 69	34	52	–	42	GDP-12		FDC-12AA	FK-0034	L-4T
5670 14012150	-150	3	2.5 ~ 12.0	150	77	–	33 ~ 69	34	52	–	42	GDP-12				
5670 14016105	HSK50A -GDZ16 -105	3	3.5 ~ 16.0	105	32	–	38 ~ 53	38	56	–	42	GDP-16				
5670 14016120	-120	3	3.5 ~ 16.0	120	47	–	38 ~ 68	38	56	–	42	GDP-16		FDC-16AA	FK-0034	L-4T
5670 14016150	-150	3	3.5 ~ 16.0	150	77	–	38 ~ 82	38	56	–	42	GDP-16				

Inch to Metric (mm) → Inch × 25.4
Metric (mm) to Inch → Metric ÷ 25.4 or Metric × 0.03937

Special / Custom Sizes on request

Unit : Metric

Code	Model	Type	d	L	L1	L2	L3	D	D1	D2	L0	Nut	kg	Collet	Spanner	Wrench
5670 15007090	HSK63A -GDZ07 -90	1	0.5 ~ 7.0	90	33	49	22 ~ 45	23	41	52	–	HDP-07A	1.1	FDC-07AA	S-0	L-3T
5670 15007120	-120	1	0.5 ~ 7.0	120	63	79	22 ~ 45	23	41	52	–	HDP-07A	1.2			
5670 15007135	-135	1	0.5 ~ 7.0	135	78	94	22 ~ 45	23	41	52	–	HDP-07A				
5670 15009090	HSK63A -GDZ09 -90	1	2.5 ~ 9.0	90	33	49	27 ~ 42	29	45	52	–	GDP-09	1.2	FDC-09AA	FK-0025	L-3T
5670 15009120	-120	1	2.5 ~ 9.0	120	63	79	27 ~ 57	29	45	52	–	GDP-09	1.3			
5670 15009135	-135	1	2.5 ~ 9.0	135	78	94	27 ~ 57	29	45	52	–	GDP-09	1.4			
5670 15012105	HSK63A -GDZ12 -105	2	2.5 ~ 12.0	105	50	–	33 ~ 54	34	52	–	–	GDP-12	1.3	FDC-12AA	FK-0034	L-4T
5670 15012120	-120	2	2.5 ~ 12.0	120	65	–	33 ~ 69	34	52	–	–	GDP-12				
5670 15012150	-150	2	2.5 ~ 12.0	150	95	–	33 ~ 69	34	52	–	–	GDP-12				
5670 15016105	HSK63A -GDZ16 -105	3	3.5 ~ 16.0	105	32	–	38 ~ 57	38	56	–	42	GDP-16	1.6	FDC-16AA	FK-0034	L-4T
5670 15016120	-120	3	3.5 ~ 16.0	120	47	–	38 ~ 67	38	56	–	42	GDP-16	1.7			
5670 15016150	-150	3	3.5 ~ 16.0	150	77	–	38 ~ 82	38	56	–	42	GDP-16				
5670 15022120	HSK63A -GDZ22 -120	3	3.5 ~ 22.0	120	43	–	47 ~ 63	49	69	–	42	GDP-22	2.1	FDC-22AA	FK-0045	L-5T
5670 15022150	-150	3	3.5 ~ 22.0	150	73	–	47 ~ 93	49	69	–	42	GDP-22				
5670 17007090	HSK100A -GDZ07 -90	1	0.5 ~ 7.0	90	30	46	22 ~ 45	23	41	84	–	HDP-07A		FDC-07AA	S-0	L-3T
5670 17007120	-120	1	0.5 ~ 7.0	120	60	76	22 ~ 45	23	41	84	–	HDP-07A				
5670 17007135	-135	1	0.5 ~ 7.0	135	75	91	22 ~ 45	23	41	84	–	HDP-07A				
5670 17009090	HSK100A -GDZ09 -90	1	2.5 ~ 9.0	90	30	46	27 ~ 45	29	45	84	–	GDP-09		FDC-09AA	FK-0025	L-3T
5670 17009120	-120	1	2.5 ~ 9.0	120	60	76	27 ~ 57	29	45	84	–	GDP-09				
5670 17009135	-135	1	2.5 ~ 9.0	135	75	91	27 ~ 57	29	45	84	–	GDP-09				
5670 17012105	HSK100A -GDZ12 -105	1	2.5 ~ 12.0	105	41	61	33 ~ 45	34	56	84	–	GDP-12		FDC-12AA	FK-0034	L-4T
5670 17012120	-120	1	2.5 ~ 12.0	120	56	76	33 ~ 60	34	56	84	–	GDP-12				
5670 17012150	-150	1	2.5 ~ 12.0	150	86	106	33 ~ 69	34	56	84	–	GDP-12				
5670 17016105	HSK100A -GDZ16 -105	1	3.5 ~ 16.0	105	41	61	38 ~ 47	38	62	84	–	GDP-16		FDC-16AA	FK-0034	L-4T
5670 17016120	-120	1	3.5 ~ 16.0	120	56	76	38 ~ 62	38	62	84	–	GDP-16				
5670 17016150	-150	1	3.5 ~ 16.0	150	86	106	38 ~ 82	38	62	84	–	GDP-16				
5670 17022105	HSK100A -GDZ22 -105	1	3.5 ~ 22.0	105	37	61	65	49	76	84	–	GDP-22		FDC-22AA	FK-0045	L-5T
5670 17022120	-120	1	3.5 ~ 22.0	120	52	76	47 ~ 57	49	76	84	–	GDP-22				
5670 17022150	-150	1	3.5 ~ 22.0	150	82	106	47 ~ 87	49	76	84	–	GDP-22				

1.Collet, preset screw, spanner and adjustment wrench are sold separately.
2.Always use AA class collet.
3.Refer to P.092 for minimum tool insertion length in case of using our coolant collets (OH,C or MS).
4."L3" dimensions in brackets are for using preset screw.
5.See P.499 for standard Tightening Torque.

Collet
P. 086 - 089


Spanner
P. 095


Preset screw
P. 094


Adjustment wrench
P. 095


Ordering Example

HSK63A - **GDZ** **07** - **90**

HSK63A: Shank size
07: Max. collet I.D.
90: Projection length (L)

ERZ

"R"Zero Holder For Small Diameters

● Holder with runout adjustment mechanism. Suitable for drilling in tight space.

Preset Screw
ERC8 Holder : Sold separately
Other Holder : Included

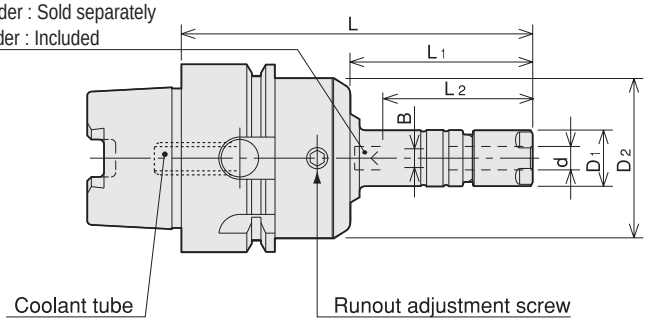

● Coolant tube is included.

Unit : Metric

Code	Model	d	L	L1	B	L2	D1	D2	Nut	Collet	Spanner	Wrench
5680 00308075	**HSK40A -ERZ8 -75**	0.5～5.0	75	39	— (0～3.1)	33 (19～29)	12	34	ERP-8	ER8	S-8E	L-3T
5680 00308090	**-90**	0.5～5.0	90	54	— (0～3.1)	33 (19～29)	12	34	ERP-8			
5680 00308105	**-105**	0.5～5.0	105	69	— (0～3.1)	33 (19～29)	12	34	ERP-8			
5680 00310075	**HSK40A-ERZ11S-75**	0.5～7.0	75	39	0～4	22～35	16	34	ERP-11S	FDC-07	S-11E	L-3T
5680 00310090	**-90**	0.5～7.0	90	54	0～4	22～42	16	34	ERP-11S			
5680 00310105	**-105**	0.5～7.0	105	69	0～4	22～42	16	34	ERP-11S			
5680 00408075	**HSK50A -ERZ8 -75**	0.5～5.0	75	33	— (0～3.1)	33 (19～28)	12	34	ERP-8	ER8	S-8E	L-3T
5680 00408090	**-90**	0.5～5.0	90	48	— (0～3.1)	33 (19～29)	12	34	ERP-8			
5680 00408105	**-105**	0.5～5.0	105	63	— (0～3.1)	33 (19～29)	12	34	ERP-8			
5680 00410075	**HSK50A-ERZ11S-75**	0.5～7.0	75	33	0～4	22～29	16	34	ERP-11S	FDC-07	S-11E	L-3T
5680 00410090	**-90**	0.5～7.0	90	48	0～4	22～42	16	34	ERP-11S			
5680 00410105	**-105**	0.5～7.0	105	63	0～4	22～42	16	34	ERP-11S			
5680 00508075	**HSK63A -ERZ8 -75**	0.5～5.0	75	33	— (0～3.1)	33 (19～26)	12	34	ERP-8	ER8	S-8E	L-3T
5680 00508090	**-90**	0.5～5.0	90	48	— (0～3.1)	33 (19～29)	12	34	ERP-8			
5680 00508120	**-120**	0.5～5.0	120	78	— (0～3.1)	33 (19～29)	12	34	ERP-8			
5680 00510075	**HSK63A-ERZ11S-75**	0.5～7.0	75	33	0～4	22～32	16	34	ERP-11S	FDC-07	S-11E	L-3T
5680 00510090	**-90**	0.5～7.0	90	48	0～4	22～42	16	34	ERP-11S			
5680 00510120	**-120**	0.5～7.0	120	78	0～4	22～42	16	34	ERP-11S			

1.Collet ,spanner and adjustment wrench are sold separately.
2.ES8, a preset screw for ERZ8, is sold separately. ERZ11S includes a standard preset screw HDS-07A-ES11.
3." B " and " L2 " dimensions in brackets are for using ES8 preset screw.
4.Refer to P.092 for minimum tool insertion length in case of using our coolant collets.
5.See P.499 for standard Tightening Torque.

Collet	Spanner	Preset screw	Adjustment wrench
P. 090-091	P. 095	P. 094	P. 095



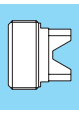


Ordering Example

HSK63A - ERZ 8 - 75

HSK63A: Shank size; 8: Max. collet I.D.; 75: Projection length (L)

Inch to Metric (mm) → Inch × 25.4
Metric (mm) to Inch → Metric ÷ 25.4 or Metric × 0.03937

Special / Custom Sizes on request

PHZ·S New

Slim Hydro "R" Zero Holder

Type1

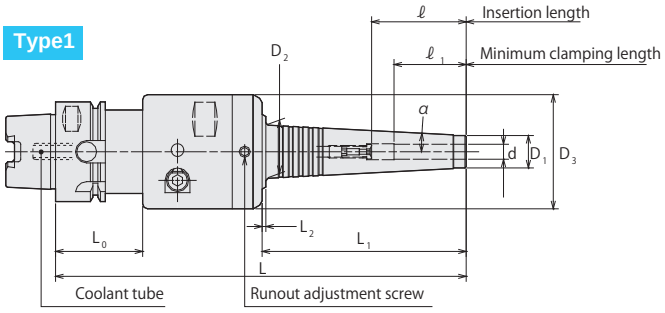

Type2

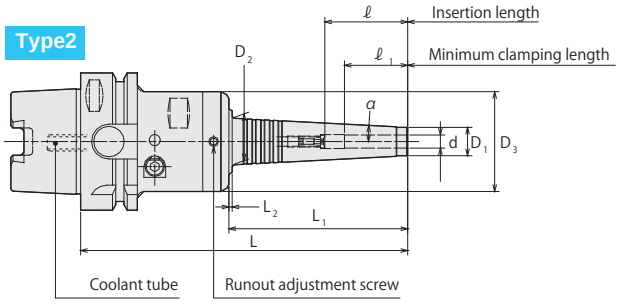

Type3

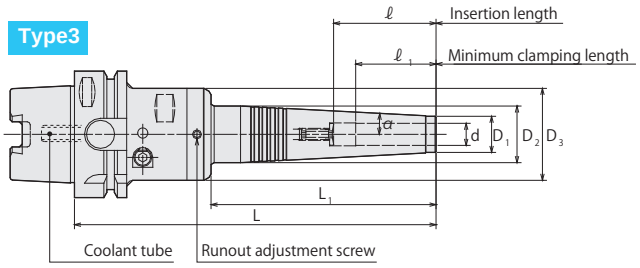

● Coolant tube is included.

Tightening torque (Torque wrench : p.498)

model	I.D. (d)		Tightening torque (Nm)
	mm	inch	
PHZ·S	06 ~ 12	—	9 ~ 10

Adjustment wrench

P. 095



Metric Sizes

Unit : Metric

Code	Model	Type	d	L	L1	L2	D1	D2	D3	L0	ℓ	ℓ1	α	Hex. wrench for the actuating screw (Option)	Hex. wrench for runout adjustment screw (Option)
5930 13006165	HSK40A -PHZ06S -165	1	6	165	82	1.5	13	21.5	46	35	37	29	3°	L-4T	L-3T
5930 13007165	HSK40A -PHZ07S -165	1	7	165	82	1.5	14	22.5	46	35	37	29	3°		
5930 13008165	HSK40A -PHZ08S -165	1	8	165	82	1.5	15	23.5	46	35	50	29	3°		
5930 13009165	HSK40A -PHZ09S -165	1	9	165	82	1.5	16	24.5	46	35	50	40	3°		
5930 13010165	HSK40A -PHZ10S -165	1	10	165	82	1.5	17	25.5	46	35	50	40	3°		
5930 13011165	HSK40A -PHZ11S -165	1	11	165	82	1.5	18	26.5	46	35	50	40	3°		
5930 13012165	HSK40A -PHZ12S -165	1	12	165	82	—	19	27.4	46	35	70	40	3°		
5930 15006150	HSK63A -PHZ06S -150	2	6	150	82	1.5	13	21.5	46	—	37	29	3°	L-4T	L-3T
5930 15006180	-180	2	6	180	112	1.5	13	24.6	46	—	37	29	3°		
5930 15007150	HSK63A -PHZ07S -150	2	7	150	82	1.5	14	22.5	46	—	37	29	3°		
5930 15007180	-180	2	7	180	112	1.5	14	25.6	46	—	37	29	3°		
5930 15008150	HSK63A -PHZ08S -150	2	8	150	82	1.5	15	23.5	46	—	50	29	3°		
5930 15008180	-180	2	8	180	112	1.5	15	26.6	46	—	50	29	3°		
5930 15009150	HSK63A -PHZ09S -150	2	9	150	82	1.5	16	24.5	46	—	50	40	3°		
5930 15009180	-180	2	9	180	112	—	16	27.6	46	—	50	40	3°		
5930 15010150	HSK63A -PHZ10S -150	2	10	150	82	1.5	17	25.5	46	—	50	40	3°		
5930 15010180	-180	3	10	180	112	—	17	28.2	46	—	50	40	3°		
5930 15011150	HSK63A -PHZ11S -150	2	11	150	82	1.5	18	26.5	46	—	50	40	3°		
5930 15011180	-180	3	11	180	112	—	18	28.2	46	—	50	40	3°		
5930 15012150	HSK63A -PHZ12S -150	2	12	150	82	—	19	27.4	46	—	70	40	3°		
5930 15012180	-180	3	12	180	112	—	19	28.2	46	—	70	40	3°		
5930 17006165	HSK100A -PHZ06S -165	2	6	165	82	1.5	13	21.5	46	—	37	29	3°	L-4T	L-3T
5930 17006195	-195	2	6	195	112	1.5	13	24.6	46	—	37	29	3°		
5930 17007165	HSK100A -PHZ07S -165	2	7	165	82	1.5	14	22.5	46	—	37	29	3°		
5930 17007195	-195	2	7	195	112	1.5	14	25.6	46	—	37	29	3°		
5930 17008165	HSK100A -PHZ08S -165	2	8	165	82	1.5	15	23.5	46	—	50	29	3°		
5930 17008195	-195	2	8	195	112	1.5	15	26.6	46	—	50	29	3°		
5930 17009165	HSK100A -PHZ09S -165	2	9	165	82	1.5	16	24.5	46	—	50	40	3°		
5930 17009195	-195	2	9	195	112	—	16	27.6	46	—	50	40	3°		
5930 17010165	HSK100A -PHZ10S -165	2	10	165	82	1.5	17	25.5	46	—	50	40	3°		
5930 17010195	-195	3	10	195	112	—	17	28.2	46	—	50	40	3°		
5930 17011165	HSK100A -PHZ11S -165	2	11	165	82	1.5	18	26.5	46	—	50	40	3°		
5930 17011195	-195	3	11	195	112	—	18	28.2	46	—	50	40	3°		
5930 17012165	HSK100A -PHZ12S -165	2	12	165	82	—	19	27.4	46	—	70	40	3°		
5930 17012195	-195	3	12	195	112	—	19	28.2	46	—	70	40	3°		

1. Tool shank diameter tolerance must be within h6.
2. Do not leave the holder with actuating screw tightened when the chuck is empty.

Ordering Example

HSK63A - PHZ 06 S - 150

Shank size | I.D. (d) | Projection length (L)

Inch to Metric (mm) → Inch × 25.4
Metric (mm) to Inch → Metric ÷ 25.4 or Metric × 0.03937

Special / Custom Sizes on request

MEMO

PHC·A

Power Hydro Chuck

● Hydro chuck with collet holder flexibility. Suitable for high precision cutting.

Type1

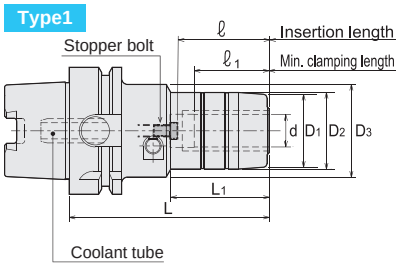

Type2

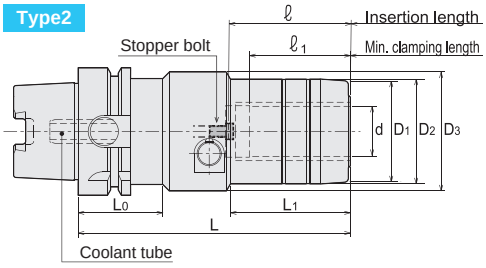

Type3

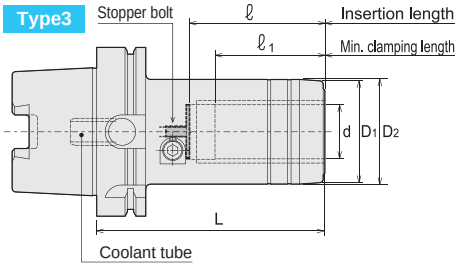

For PHC04A, the stopper bolt is not included. Please order separately (Special item).

● Coolant tube is included.

Inch Sizes

Unit : Inch

Code	Model	Type	d	L	L1	D1	D2	D3	L0	ℓ	ℓ1	Wrench (Option)
573015308075	HSK63A -PHC0250A -75	1	0.25	2.953	1.19	0.945	1.024	1.811	—	1.338	1.142	L-4T (4mm)
573015308120	-120	1	0.25	4.725	1.624	0.945	1.024	1.811	—	1.771	1.142	
573015310075	HSK63A -PHC0312A -75	1	0.312	2.953	1.213	1.024	1.103	1.811	—	1.338	1.142	
573015310120	-120	1	0.312	4.725	1.646	1.024	1.103	1.811	—	1.771	1.142	
573015312090	HSK63A -PHC0375A -90	1	0.375	3.544	1.758	1.103	1.182	2.048	—	1.968	1.575	
573015312120	-120	1	0.375	4.725	2.546	1.103	1.182	2.048	—	2.755	1.575	
573015316090	HSK63A -PHC0500A -90	1	0.5	3.544	1.826	1.339	1.418	2.048	—	1.968	1.575	
573015316120	-120	1	0.5	4.725	2.614	1.339	1.418	2.048	—	2.755	1.575	
573015320090	HSK63A -PHC0625A -90	1	0.625	3.544	1.849	1.418	1.496	2.048	—	1.968	1.575	
573015320120	-120	1	0.625	4.725	2.637	1.418	1.496	2.048	—	2.755	1.575	
573015324090	HSK63A -PHC0750A -90	1	0.75	3.544	1.963	1.575	1.654	1.811	—	1.968	1.575	
573015324120	-120	1	0.75	4.725	2.75	1.575	1.654	1.811	—	2.755	1.575	
573015332135	HSK63A -PHC1000A -135	2	1	5.315	2.342	1.969	2.048	2.323	1.654	2.362	1.969	L-6T (6mm)
573015332150	-150	2	1	5.906	3.13	1.969	2.048	2.323	1.654	3.149	1.969	
573015340135	HSK63A -PHC1250A -135	2	1.25	5.315	1.668	2.363	2.441	3.347	1.654	3.149	2.56	
573015340150	-150	2	1.25	5.906	—	2.363	2.441	—	1.654	3.149	2.56	
—	HSK100A -PHC0250A -90	1	0.25	3.544	1.19	0.945	1.024	1.811	—	1.338	1.142	L-4T (4mm)
—	-120	1	0.25	4.725	1.624	0.945	1.024	1.811	—	1.771	1.142	
—	-150	1	0.25	5.906	1.624	0.945	1.024	1.811	—	1.771	1.142	
—	HSK100A -PHC0375A -105	1	0.375	4.134	1.758	1.103	1.182	2.048	—	1.968	1.575	
—	-135	1	0.375	5.315	2.546	1.103	1.182	2.048	—	2.755	1.575	
—	-165	1	0.375	6.496	2.546	1.103	1.182	2.048	—	2.755	1.575	
—	HSK100A -PHC0500A -105	1	0.5	4.134	1.826	1.339	1.418	2.048	—	1.968	1.575	
—	-135	1	0.5	5.315	2.614	1.339	1.418	2.048	—	2.755	1.575	
—	-165	1	0.5	6.496	2.614	1.339	1.418	2.048	—	2.755	1.575	
—	HSK100A -PHC0625A -105	1	0.625	4.134	1.849	1.418	1.496	2.048	—	1.968	1.575	
—	-135	1	0.625	5.315	2.637	1.418	1.496	2.048	—	2.755	1.575	
—	-165	1	0.625	6.496	2.637	1.418	1.496	2.048	—	2.755	1.575	
—	HSK100A -PHC0750A -105	1	0.75	4.134	1.963	1.575	1.654	1.811	—	1.968	1.575	
—	-135	1	0.75	5.315	2.75	1.575	1.654	1.811	—	2.755	1.575	
—	-165	1	0.75	6.496	2.75	1.575	1.654	1.811	—	2.755	1.575	
—	HSK100A -PHC1000A -120	1	1	4.725	2.347	1.969	2.048	2.441	—	2.519	1.969	L-6T (6mm)
—	-165	1	1	6.496	3.135	1.969	2.048	2.441	—	3.149	1.969	
—	HSK100A -PHC1250A -135	3	1.25	5.315	—	2.363	2.441	—	—	3.149	2.56	
—	-165	3	1.25	6.496	—	2.363	2.441	—	—	3.149	2.56	

1. Cutting tool shank must be within tolerances specified below ;
   Shank diameter less than 6mm : Within h6 tolerance
   Shank diameter 6mm and over : Within h7 tolerance
   h6 or 0/-0.01 tolerance is recommended when newly making a cutting tool.
2. Do not leave the holder with actuating screw tightened when the chuck is empty.
3. PHC0500A and PHC0750A have pin holes for collet with stopper pin on its body.
4. Item code with - is semi standard item.

Ordering Example

HSK63A - PHC 0250 A - 120

Shank size | I.D. (d) | Projection length (L)

Inch to Metric (mm) → Inch × 25.4
Metric (mm) to Inch → Metric ÷ 25.4 or Metric × 0.03937

Special / Custom Sizes on request

Metric Sizes

Unit : Metric

Code	Model	Type	d	L	L1	D1	D2	D3	L0	ℓ	ℓ1	Wrench (Option)
5730 13204080	HSK40A -PHC04A -80	2	4	80	25.1	—	25	46	35	29	24	
573013206090	HSK40A -PHC06A -90	2	6	90	30	24	26	46	35	34	29	
573013207090	HSK40A -PHC07A -90	2	7	90	30	26	28	46	35	34	29	
573013208090	HSK40A -PHC08A -90	2	8	90	30	26	28	46	35	34	29	
573013209105	HSK40A -PHC09A -105	2	9	105	44	28	30	52	35	50	40	
573013210105	HSK40A -PHC10A -105	2	10	105	44	28	30	52	35	50	40	
573013211105	HSK40A -PHC11A -105	2	11	105	45	30	32	52	35	50	40	L-4T (4mm)
573013212105	HSK40A -PHC12A -105	2	12	105	45	30	32	52	35	50	40	
573013213105	HSK40A -PHC13A -105	2	13	105	46	34	36	52	35	50	40	
573013214105	HSK40A -PHC14A -105	2	14	105	46	34	36	52	35	50	40	
573013215105	HSK40A -PHC15A -105	2	15	105	46	36	38	52	35	50	40	
573013216105	HSK40A -PHC16A -105	2	16	105	46	36	38	52	35	50	40	
573013220105	HSK40A -PHC20A -105	2	20	105	49	40	42	46	35	50	40	
573013225120	HSK40A -PHC25A -120	2	25	120	59	50	52	59	35	60	50	L-6T(6mm)
5730 14204085	HSK50A -PHC04A -85	2	4	85	25.1	—	25	46	42	29	24	
573014206090	HSK50A -PHC06A -90	2	6	90	30	24	26	46	41	34	29	
573014207090	HSK50A -PHC07A -90	2	7	90	30	26	28	46	41	34	29	
573014208090	HSK50A -PHC08A -90	2	8	90	30	26	28	46	41	34	29	
573014209105	HSK50A -PHC09A -105	2	9	105	44	28	30	52	41	50	40	
573014210105	HSK50A -PHC10A -105	2	10	105	44	28	30	52	41	50	40	
573014211105	HSK50A -PHC11A -105	2	11	105	45	30	32	52	41	50	40	
573014212105	HSK50A -PHC12A -105	2	12	105	45	30	32	52	41	50	40	L-4T (4mm)
573014213105	HSK50A -PHC13A -105	2	13	105	46	34	36	52	41	50	40	
573014214105	HSK50A -PHC14A -105	2	14	105	46	34	36	52	41	50	40	
573014215105	HSK50A -PHC15A -105	2	15	105	46	36	38	52	41	50	40	
573014216105	HSK50A -PHC16A -105	2	16	105	46	36	38	52	41	50	40	
573014220105	HSK50A -PHC20A -105	2	20	105	49	40	42	46	41	50	40	
573014225135	HSK50A -PHC25A -135	2	25	135	59	50	52	59	42	60	50	L-6T(6mm)
5730 15204070	HSK63A -PHC04A -70	1	4	70	25.1	—	25	46	—	29	24	
573015206075	HSK63A -PHC06A -75	1	6	75	30	24	26	46	—	34	29	
573015206120	-120	1	6	120	41	24	26	46	—	45	29	
573015207075	HSK63A -PHC07A -75	1	7	75	30	26	28	46	—	34	29	
573015207120	-120	1	7	120	41	26	28	46	—	45	29	
573015208075	HSK63A -PHC08A -75	1	8	75	30	26	28	46	—	34	29	
573015208120	-120	1	8	120	41	26	28	46	—	45	29	
573015209090	HSK63A -PHC09A -90	1	9	90	44	28	30	52	—	50	40	
573015209120	-120	1	9	120	64	28	30	52	—	70	40	
573015210090	HSK63A -PHC10A -90	1	10	90	44	28	30	52	—	50	40	
573015210120	-120	1	10	120	64	28	30	52	—	70	40	
573015211090	HSK63A -PHC11A -90	1	11	90	45	30	32	52	—	50	40	
573015211120	-120	1	11	120	65	30	32	52	—	70	40	L-4T (4mm)
573015212090	HSK63A -PHC12A -90	1	12	90	45	30	32	52	—	50	40	
573015212120	-120	1	12	120	65	30	32	52	—	70	40	
573015213090	HSK63A -PHC13A -90	1	13	90	46	34	36	52	—	50	40	
573015213120	-120	1	13	120	66	34	36	52	—	70	40	
573015214090	HSK63A -PHC14A -90	1	14	90	46	34	36	52	—	50	40	
573015214120	-120	1	14	120	66	34	36	52	—	70	40	
573015215090	HSK63A -PHC15A -90	1	15	90	46	36	38	52	—	50	40	
573015215120	-120	1	15	120	66	36	38	52	—	70	40	
573015216090	HSK63A -PHC16A -90	1	16	90	46	36	38	52	—	50	40	
573015216120	-120	1	16	120	66	36	38	52	—	70	40	
573015220090	HSK63A -PHC20A -90	1	20	90	49	40	42	46	—	50	40	
573015220120	-120	1	20	120	69	40	42	46	—	70	40	

1. Cutting tool shank must be within tolerances specified below ;
   Shank diameter less than 6mm : Within h6 tolerance
   Shank diameter 6mm and over : Within h7 tolerance
   h6 or 0/-0.01 tolerance is recommended when newly making a cutting tool.
2. Do not leave the holder with actuating screw tightened when the chuck is empty.
3. PHC12A and PHC20A have pin holes for collet with stopper pin on its body.
4. For PHC04A, the stopper bolt is not included. Please order separately (Special item).

Ordering Example

HSK40A - PHC 06 A - 90

Shank size | I.D. (d) | Projection length (L)

Tightening torque (Torque wrench : p.498)

model	I.D. (d)		Tightening torque (Nm)
	mm	inch	
PHC·A	06 ~ 08	0250 ~ 0312	11 ~ 12
PHC·A	09 ~ 20	0375 ~ 0750	7 ~ 8
PHC·A	25, 32	1000, 1250	29 ~ 30

PHS Collet
P.110

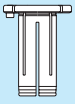

Hex. Wrench
P. 095

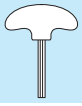

Inch to Metric (mm) → Inch × 25.4
Metric (mm) to Inch → Metric ÷ 25.4 or Metric × 0.03937

Special / Custom Sizes on request

Metric Sizes

Unit : Metric

Code	Model	Type	d	L	L1	D1	D2	D3	L0	ℓ	ℓ1	Wrench (Option)
573015225135	HSK63A -PHC25A -135	2	25	135	59	50	52	59	42	60	50	L-6T (6mm)
573015225150	-150	2	25	150	79	50	52	59	42	80	50	
573015232135	HSK63A -PHC32A -135	2	32	135	42	60	62	85	42	80	65	
573015232150	-150	2	32	150	108	60	62	62	42	80	65	
573017206090	HSK100A -PHC06A -90	1	6	90	30	24	26	46	—	34	29	L-4T (4mm)
573017206120	-120	1	6	120	41	24	26	46	—	45	29	
573017206150	-150	1	6	150	41	24	26	46	—	45	29	
573017207090	HSK100A -PHC07A -90	1	7	90	30	26	28	46	—	34	29	
573017207120	-120	1	7	120	41	26	28	46	—	45	29	
573017207150	-150	1	7	150	41	26	28	46	—	45	29	
573017208090	HSK100A -PHC08A -90	1	8	90	30	26	28	46	—	34	29	
573017208120	-120	1	8	120	41	26	28	46	—	45	29	
573017208150	-150	1	8	150	41	26	28	46	—	45	29	
573017209105	HSK100A -PHC09A -105	1	9	105	44	28	30	52	—	50	40	
573017209135	-135	1	9	135	64	28	30	52	—	70	40	
573017209165	-165	1	9	165	64	28	30	52	—	70	40	
573017210105	HSK100A -PHC10A -105	1	10	105	44	28	30	52	—	50	40	
573017210135	-135	1	10	135	64	28	30	52	—	70	40	
573017210165	-165	1	10	165	64	28	30	52	—	70	40	
573017211105	HSK100A -PHC11A -105	1	11	105	45	30	32	52	—	50	40	
573017211135	-135	1	11	135	65	30	32	52	—	70	40	
573017211165	-165	1	11	165	65	30	32	52	—	70	40	
573017212105	HSK100A -PHC12A -105	1	12	105	45	30	32	52	—	50	40	L-4T (4mm)
573017212135	-135	1	12	135	65	30	32	52	—	70	40	
573017212165	-165	1	12	165	65	30	32	52	—	70	40	
573017213105	HSK100A -PHC13A -105	1	13	105	46	34	36	52	—	50	40	
573017213135	-135	1	13	135	66	34	36	52	—	70	40	
573017213165	-165	1	13	165	66	34	36	52	—	70	40	
573017214105	HSK100A -PHC14A -105	1	14	105	46	34	36	52	—	50	40	
573017214135	-135	1	14	135	66	34	36	52	—	70	40	
573017214165	-165	1	14	165	66	34	36	52	—	70	40	
573017215105	HSK100A -PHC15A -105	1	15	105	46	36	38	52	—	50	40	
573017215135	-135	1	15	135	66	36	38	52	—	70	40	
573017215165	-165	1	15	165	66	36	38	52	—	70	40	
573017216105	HSK100A -PHC16A -105	1	16	105	46	36	38	52	—	50	40	
573017216135	-135	1	16	135	66	36	38	52	—	70	40	
573017216165	-165	1	16	165	66	36	38	52	—	70	40	
573017220105	HSK100A -PHC20A -105	1	20	105	49	40	42	46	—	50	40	
573017220135	-135	1	20	135	69	40	42	46	—	70	40	
573017220165	-165	1	20	165	69	40	42	46	—	70	40	
573017225120	HSK100A -PHC25A -120	1	25	120	59	50	52	62	—	64	50	L-6T (6mm)
573017225165	-165	1	25	165	79	50	52	62	—	80	50	
573017232135	HSK100A -PHC32A -135	3	32	135	—	60	62	—	—	80	65	
573017232165	-165	3	32	165	—	60	62	—	—	80	65	

1. Cutting tool shank must be within tolerances specified below ;
   Shank diameter less than 6mm : Within h6 tolerance
   Shank diameter 6mm and over : Within h7 tolerance
   h6 or 0/-0.01 tolerance is recommended when newly making a cutting tool.
2. Do not leave the holder with actuating screw tightened when the chuck is empty.
3. PHC12A and PHC20A have pin holes for collet with stopper pin on its body.

Ordering Example

HSK100A - PHC 06 A - 90

HSK100A: Shank size; 06: I.D. (d); 90: Projection length (L)

Tightening torque (Torque wrench : p.498)

model	I.D. (d)		Tightening torque (Nm)
	mm	inch	
PHC·A	06 ~ 08	0250 ~ 0312	11 ~ 12
PHC·A	09 ~ 20	0375 ~ 0750	7 ~ 8
PHC·A	25, 32	1000, 1250	29 ~ 30

PHS Collet

P.110

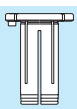

Hex. Wrench

P. 095



Inch to Metric (mm) → Inch × 25.4
Metric (mm) to Inch → Metric ÷ 25.4 or Metric × 0.03937

Special / Custom Sizes on request

MEMO

PHC·S New

Slim Hydro Chuck

● Perfect choice for tight space applications, such as endmill finishing, drilling and reaming on 5-axis machines.

Type1

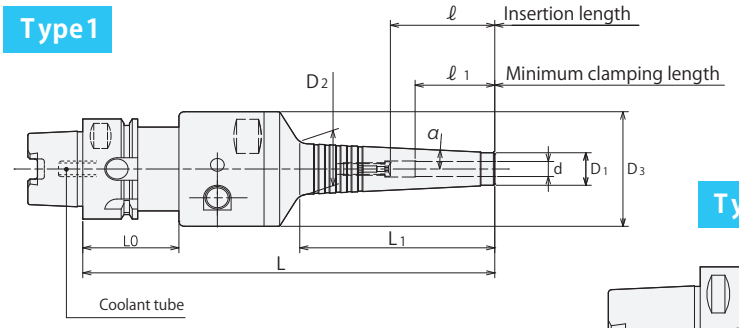

Type2

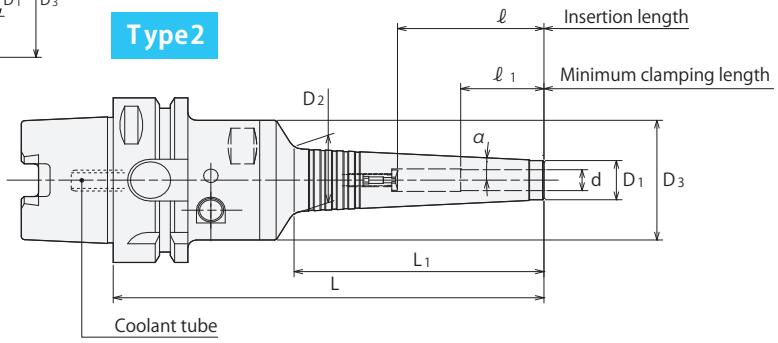

● Coolant tube is included.

Inch Sizes

Unit : Inch

Code	Model	Type	d	L	L1	D1	D2	D3	L0	ℓ	ℓ1	α	Wrench (Option)
-	HSK40A -PHC0250S -150	1	0.250	5.906	2.795	0.512	0.807	1.811	1.378	1.457	1.142		
-	-165	1	0.250	6.496	3.425	0.512	0.874	1.811	1.378	1.457	1.142		
-	-180	1	0.250	7.087	4.016	0.512	0.933	1.811	1.378	1.457	1.142		
-	HSK40A -PHC0312S -150	1	0.312	5.906	2.835	0.591	0.890	1.811	1.378	1.969	1.142		
-	-165	1	0.312	6.496	3.425	0.591	0.953	1.811	1.378	1.969	1.142		
-	-180	1	0.312	7.087	4.055	0.591	1.016	1.811	1.378	1.969	1.142		
-	HSK40A -PHC0375S -150	1	0.375	5.906	2.835	0.669	0.969	1.811	1.378	1.969	1.575	3°	L-4T
-	-165	1	0.375	6.496	3.465	0.669	1.035	1.811	1.378	1.969	1.575		
-	-180	1	0.375	7.087	4.055	0.669	1.094	1.811	1.378	1.969	1.575		
-	HSK40A -PHC0500S -150	1	0.500	5.906	2.874	0.787	1.091	1.811	1.378	2.756	1.575		
-	-165	1	0.500	6.496	3.504	0.787	1.157	1.811	1.378	2.756	1.575		
-	-180	1	0.500	7.087	4.094	0.787	1.220	1.811	1.378	2.756	1.575		
-	HSK50A -PHC0250S -150	1	0.250	5.906	2.795	0.512	0.807	1.811	1.654	1.457	1.142		
-	-165	1	0.250	6.496	3.425	0.512	0.874	1.811	1.654	1.457	1.142		
-	-180	1	0.250	7.087	4.016	0.512	0.933	1.811	1.654	1.457	1.142		
-	HSK50A -PHC0312S -150	1	0.312	5.906	2.835	0.591	0.890	1.811	1.654	1.969	1.142		
-	-165	1	0.312	6.496	3.425	0.591	0.953	1.811	1.654	1.969	1.142		
-	-180	1	0.312	7.087	4.055	0.591	1.016	1.811	1.654	1.969	1.142		
-	HSK50A -PHC0375S -150	1	0.375	5.906	2.835	0.669	0.969	1.811	1.654	1.969	1.575	3°	L-4T
-	-165	1	0.375	6.496	3.465	0.669	1.035	1.811	1.654	1.969	1.575		
-	-180	1	0.375	7.087	4.055	0.669	1.094	1.811	1.654	1.969	1.575		
-	HSK50A -PHC0500S -150	1	0.500	5.906	2.874	0.787	1.091	1.811	1.654	2.756	1.575		
-	-165	1	0.500	6.496	3.504	0.787	1.157	1.811	1.654	2.756	1.575		
-	-180	1	0.500	7.087	4.094	0.787	1.220	1.811	1.654	2.756	1.575		
-	HSK63A -PHC0250S -135	2	0.250	5.315	2.795	0.512	0.807	1.811	-	1.457	1.142		
-	-150	2	0.250	5.906	3.425	0.512	0.874	1.811	-	1.457	1.142		
-	-165	2	0.250	6.496	4.016	0.512	0.933	1.811	-	1.457	1.142		
-	-180	2	0.250	7.087	4.646	0.512	1.000	1.811	-	1.457	1.142		
-	HSK63A -PHC0312S -135	2	0.312	5.315	2.835	0.591	0.890	1.811	-	1.969	1.142		
-	-150	2	0.312	5.906	3.425	0.591	0.953	1.811	-	1.969	1.142		
-	-165	2	0.312	6.496	4.055	0.591	1.016	1.811	-	1.969	1.142		
-	-180	2	0.312	7.087	4.646	0.591	1.079	1.811	-	1.969	1.142		
-	HSK63A -PHC0375S -135	2	0.375	5.315	2.835	0.669	0.969	1.811	-	1.969	1.575	3°	L-4T
-	-150	2	0.375	5.906	3.465	0.669	1.035	1.811	-	1.969	1.575		
-	-165	2	0.375	6.496	4.055	0.669	1.094	1.811	-	1.969	1.575		
-	-180	2	0.375	7.087	4.685	0.669	1.161	1.811	-	1.969	1.575		
-	HSK63A -PHC0500S -135	2	0.500	5.315	2.874	0.787	1.091	1.811	-	2.756	1.575		
-	-150	2	0.500	5.906	3.504	0.787	1.157	1.811	-	2.756	1.575		
-	-165	2	0.500	6.496	4.094	0.787	1.220	1.811	-	2.756	1.575		
-	-180	2	0.500	7.087	4.724	0.787	1.283	1.811	-	2.756	1.575		

Inch to Metric (mm) → Inch × 25.4
Metric (mm) to Inch → Metric ÷ 25.4 or Metric × 0.03937

Special / Custom Sizes on request

Inch Sizes

Unit : Inch

Code	Model	Type	d	L	L1	D1	D2	D3	L0	ℓ	ℓ1	α	Wrench (Option)
-	HSK100A -PHC0250S -150	2	0.250	5.906	2.795	0.512	0.807	1.811	-	1.457	1.142	3°	L-4T
-	-165	2	0.250	6.496	3.425	0.512	0.874	1.811	-	1.457	1.142		
-	-180	2	0.250	7.087	4.016	0.512	0.933	1.811	-	1.457	1.142		
-	-195	2	0.250	7.677	4.646	0.512	1.000	1.811	-	1.457	1.142		
-	HSK100A -PHC0312S -150	2	0.312	5.906	2.835	0.591	0.890	1.811	-	1.969	1.142		
-	-165	2	0.312	6.496	3.425	0.591	0.953	1.811	-	1.969	1.142		
-	-180	2	0.312	7.087	4.055	0.591	1.016	1.811	-	1.969	1.142		
-	-195	2	0.312	7.677	4.646	0.591	1.079	1.811	-	1.969	1.142		
-	HSK100A -PHC0375S -150	2	0.375	5.906	2.835	0.669	0.969	1.811	-	1.969	1.575		
-	-165	2	0.375	6.496	3.465	0.669	1.035	1.811	-	1.969	1.575		
-	-180	2	0.375	7.087	4.055	0.669	1.094	1.811	-	1.969	1.575		
-	-195	2	0.375	7.677	4.685	0.669	1.161	1.811	-	1.969	1.575		
-	HSK100A -PHC0500S -150	2	0.500	5.906	2.874	0.787	1.091	1.811	-	2.756	1.575		
-	-165	2	0.500	6.496	3.504	0.787	1.157	1.811	-	2.756	1.575		
-	-180	2	0.500	7.087	4.094	0.787	1.220	1.811	-	2.756	1.575		
-	-195	2	0.500	7.677	4.724	0.787	1.283	1.811	-	2.756	1.575		

1. Tool shank diameter tolerance must be within h6.
2. Do not leave the holder with actuating screw tightened when the chuck is empty.
3. Item code with - is semi standard item.

Ordering Example

HSK40A - PHC 0250 S - 150

Shank size | I.D. (d) | Projection length (L)

Tightening torque (Torque wrench : p.498)

model	inch	Tightening torque (Nm)
PHC·S	0250 ~ 0500	9 ~ 10

Hex. Wrench

P. 095



Inch to Metric (mm) → Inch × 25.4
Metric (mm) to Inch → Metric ÷ 25.4 or Metric × 0.03937

Special / Custom Sizes on request

PHC·S New

Slim Hydro Chuck

● Perfect choice for tight space applications, such as endmill finishing, drilling and reaming on 5-axis machines.

Type1

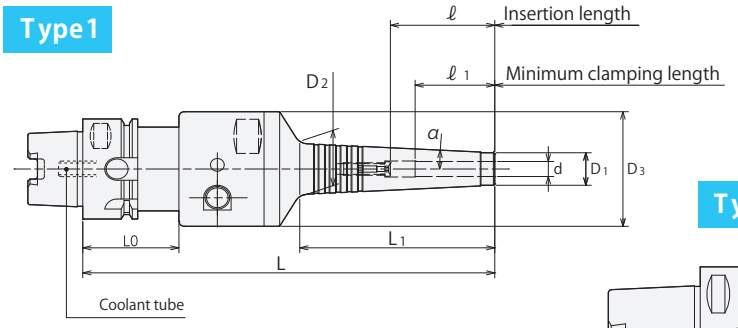

Type2

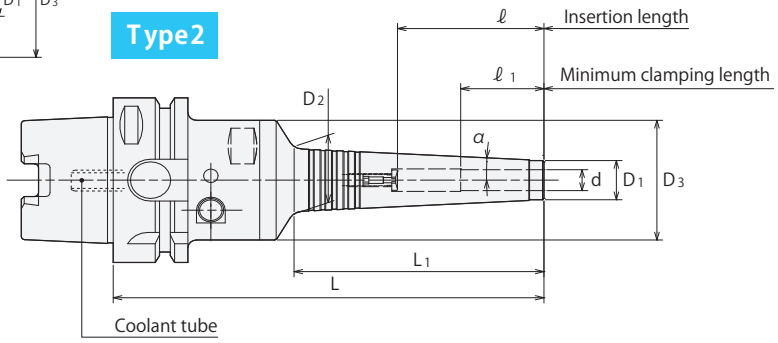

● Coolant tube is included.

Metric Sizes

Unit : Metric

Code	Model	Type	d	L	L1	D1	D2	D3	L0	ℓ	ℓ 1	α	Kg	Wrench(Option)
5750 13006150	HSK40A -PHC06S -150	1	6	150	71	13	20.5	46	35	37	29	3°	0.9	
5750 13006165	-165	1	6	165	87	13	22.2	46	35	37	29	3°	1.0	
5750 13006180	-180	1	6	180	102	13	23.7	46	35	37	29	3°	1.0	
5750 13007150	HSK40A -PHC07S -150	1	7	150	71	14	21.5	46	35	37	29	3°	1.0	
5750 13007165	-165	1	7	165	87	14	23.2	46	35	37	29	3°	1.0	
5750 13007180	-180	1	7	180	102	14	24.7	46	35	37	29	3°	1.1	
5750 13008150	HSK40A -PHC08S -150	1	8	150	72	15	22.6	46	35	50	29	3°	1.0	
5750 13008165	-165	1	8	165	87	15	24.2	46	35	50	29	3°	1.0	
5750 13008180	-180	1	8	180	103	15	25.8	46	35	50	29	3°	1.1	
5750 13009150	HSK40A -PHC09S -150	1	9	150	72	16	23.6	46	35	50	40	3°	1.0	
5750 13009165	-165	1	9	165	87	16	25.2	46	35	50	40	3°	1.0	
5750 13009180	-180	1	9	180	103	16	26.8	46	35	50	40	3°	1.1	
5750 13010150	HSK40A -PHC10S -150	1	10	150	72	17	24.6	46	35	50	40	3°	1.0	
5750 13010165	-165	1	10	165	88	17	26.3	46	35	50	40	3°	1.0	
5750 13010180	-180	1	10	180	103	17	27.8	46	35	50	40	3°	1.1	
5750 13011150	HSK40A -PHC11S -150	1	11	150	73	18	25.7	46	35	50	40	3°	1.0	
5750 13011165	-165	1	11	165	88	18	27.3	46	35	50	40	3°	1.1	
5750 13011180	-180	1	11	180	104	18	29.0	46	35	50	40	3°	1.1	
5750 13012150	HSK40A -PHC12S -150	1	12	150	73	19	26.7	46	35	70	40	3°	1.0	
5750 13012165	-165	1	12	165	88	19	28.3	46	35	70	40	3°	1.1	
5750 13012180	-180	1	12	180	104	19	30.0	46	35	70	40	3°	1.1	
5750 14006150	HSK50A -PHC06S -150	1	6	150	71	13	20.5	46	42	37	29	3°	1.1	
5750 14006165	-165	1	6	165	87	13	22.2	46	42	37	29	3°	1.1	
5750 14006180	-180	1	6	180	102	13	23.7	46	42	37	29	3°	1.2	
5750 14007150	HSK50A -PHC07S -150	1	7	150	71	14	21.5	46	42	37	29	3°	1.1	
5750 14007165	-165	1	7	165	87	14	23.2	46	42	37	29	3°	1.2	
5750 14007180	-180	1	7	180	102	14	24.7	46	42	37	29	3°	1.2	
5750 14008150	HSK50A -PHC08S -150	1	8	150	72	15	22.6	46	42	50	29	3°	1.1	
5750 14008165	-165	1	8	165	87	15	24.2	46	42	50	29	3°	1.2	
5750 14008180	-180	1	8	180	103	15	25.8	46	42	50	29	3°	1.2	
5750 14009150	HSK50A -PHC09S -150	1	9	150	72	16	23.6	46	42	50	40	3°	1.1	
5750 14009165	-165	1	9	165	87	16	25.2	46	42	50	40	3°	1.2	
5750 14009180	-180	1	9	180	103	16	26.8	46	42	50	40	3°	1.3	
5750 14010150	HSK50A -PHC10S -150	1	10	150	72	17	24.6	46	42	50	40	3°	1.2	
5750 14010165	-165	1	10	165	88	17	26.3	46	42	50	40	3°	1.2	
5750 14010180	-180	1	10	180	103	17	27.8	46	42	50	40	3°	1.3	
5750 14011150	HSK50A -PHC11S -150	1	11	150	73	18	25.7	46	42	50	40	3°	1.2	
5750 14011165	-165	1	11	165	88	18	27.3	46	42	50	40	3°	1.2	
5750 14011180	-180	1	11	180	104	18	29.0	46	42	50	40	3°	1.3	
5750 14012150	HSK50A -PHC12S -150	1	12	150	73	19	26.7	46	42	70	40	3°	1.2	
5750 14012165	-165	1	12	165	88	19	28.3	46	42	70	40	3°	1.2	
5750 14012180	-180	1	12	180	104	19	30.0	46	42	70	40	3°	1.3	
5750 15006135	HSK63A -PHC06S -135	2	6	135	71	13	20.5	46	-	37	29	3°	1.2	
5750 15006150	-150	2	6	150	87	13	22.2	46	-	37	29	3°	1.3	
5750 15006165	-165	2	6	165	102	13	23.7	46	-	37	29	3°	1.3	
5750 15006180	-180	2	6	180	118	13	25.4	46	-	37	29	3°	1.4	

L-4T

L-4T

L-4T

Inch to Metric (mm) → Inch × 25.4
Metric (mm) to Inch → Metric ÷ 25.4 or Metric × 0.03937

Special / Custom Sizes on request

Metric Sizes

Unit : Metric

Code	Model	Type	d	L	L1	D1	D2	D3	L0	ℓ	ℓ 1	α	Kg	Wrench(Option)
5750 15007135	HSK63A -PHC07S -135	2	7	135	71	14	21.5	46	-	37	29	3°	1.2	
5750 15007150	-150	2	7	150	87	14	23.2	46	-	37	29	3°	1.3	
5750 15007165	-165	2	7	165	102	14	24.7	46	-	37	29	3°	1.3	
5750 15007180	-180	2	7	180	118	14	26.4	46	-	37	29	3°	1.4	
5750 15008135	HSK63A -PHC08S -135	2	8	135	72	15	22.6	46	-	50	29	3°	1.2	
5750 15008150	-150	2	8	150	87	15	24.2	46	-	50	29	3°	1.3	
5750 15008165	-165	2	8	165	103	15	25.8	46	-	50	29	3°	1.3	
5750 15008180	-180	2	8	180	118	15	27.4	46	-	50	29	3°	1.4	
5750 15009135	HSK63A -PHC09S -135	2	9	135	72	16	23.6	46	-	50	40	3°	1.3	
5750 15009150	-150	2	9	150	87	16	25.2	46	-	50	40	3°	1.3	
5750 15009165	-165	2	9	165	103	16	26.8	46	-	50	40	3°	1.4	
5750 15009180	-180	2	9	180	118	16	28.4	46	-	50	40	3°	1.4	
5750 15010135	HSK63A -PHC10S -135	2	10	135	72	17	24.6	46	-	50	40	3°	1.3	
5750 15010150	-150	2	10	150	88	17	26.3	46	-	50	40	3°	1.3	L-4T
5750 15010165	-165	2	10	165	103	17	27.8	46	-	50	40	3°	1.4	
5750 15010180	-180	2	10	180	119	17	29.5	46	-	50	40	3°	1.5	
5750 15011135	HSK63A -PHC11S -135	2	11	135	73	18	25.7	46	-	50	40	3°	1.3	
5750 15011150	-150	2	11	150	88	18	27.3	46	-	50	40	3°	1.3	
5750 15011165	-165	2	11	165	104	18	29.0	46	-	50	40	3°	1.3	
5750 15011180	-180	2	11	180	119	18	30.5	46	-	50	40	3°	1.5	
5750 15012135	HSK63A -PHC12S -135	2	12	135	73	19	26.7	46	-	70	40	3°	1.3	
5750 15012150	-150	2	12	150	88	19	28.3	46	-	70	40	3°	1.3	
5750 15012165	-165	2	12	165	104	19	30.0	46	-	70	40	3°	1.4	
5750 15012180	-180	2	12	180	119	19	31.5	46	-	70	40	3°	1.5	
5750 15016135	HSK63A -PHC16S -135	1	16	135	72	23	30.6	52.5	-	75	40	3°		
5750 15016165	-165	1	16	165	103	23	33.8	52.5	-	80	40	3°		
5750 15016180	-180	1	16	180	119	23	35.5	52.5	-	80	40	3°		
5750 15020150	HSK63A -PHC20S -150	2	20	150	63	28	34.7	62	42	70	40	3°		
5750 15020180	-180	2	20	180	93	28	37.8	62	42	100	40	3°		
5750 15020195	-195	2	20	195	109	28	39.5	62	42	100	40	3°		
5750 15025150	HSK63A -PHC25S -150	2	25	150	65	37	43.9	62	42	70	50	3°		L-6T
5750 15025180	-180	2	25	180	96	37	47.1	62	42	100	50	3°		
5750 15025195	-195	2	25	195	112	37	48.8	62	42	110	50	3°		
5750 17006150	HSK100A -PHC06S -150	2	6	150	71	13	20.5	46	-	37	29	3°	2.7	
5750 17006165	-165	2	6	165	87	13	22.2	46	-	37	29	3°	2.7	
5750 17006180	-180	2	6	180	102	13	23.7	46	-	37	29	3°	2.8	
5750 17006195	-195	2	6	195	118	13	25.4	46	-	37	29	3°	2.8	
5750 17007150	HSK100A -PHC07S -150	2	7	150	71	14	21.5	46	-	37	29	3°	2.7	
5750 17007165	-165	2	7	165	87	14	23.2	46	-	37	29	3°	2.8	
5750 17007180	-180	2	7	180	102	14	24.7	46	-	37	29	3°	2.8	
5750 17007195	-195	2	7	195	118	14	26.4	46	-	37	29	3°	2.9	
5750 17008150	HSK100A -PHC08S -150	2	8	150	72	15	22.6	46	-	50	29	3°	2.7	
5750 17008165	-165	2	8	165	87	15	24.2	46	-	50	29	3°	2.8	
5750 17008180	-180	2	8	180	103	15	25.8	46	-	50	29	3°	2.8	
5750 17008195	-195	2	8	195	118	15	27.4	46	-	50	29	3°	2.9	
5750 17009150	HSK100A -PHC09S -150	2	9	150	72	16	23.6	46	-	50	40	3°	2.7	
5750 17009165	-165	2	9	165	87	16	25.2	46	-	50	40	3°	2.8	
5750 17009180	-180	2	9	180	103	16	26.8	46	-	50	40	3°	2.8	
5750 17009195	-195	2	9	195	118	16	28.4	46	-	50	40	3°	2.9	
5750 17010150	HSK100A -PHC10S -150	2	10	150	72	17	24.6	46	-	50	40	3°	2.7	
5750 17010165	-165	2	10	165	88	17	26.3	46	-	50	40	3°	2.8	
5750 17010180	-180	2	10	180	103	17	27.8	46	-	50	40	3°	2.9	
5750 17010195	-195	2	10	195	119	17	29.5	46	-	50	40	3°	2.9	
5750 17011150	HSK100A -PHC11S -150	2	11	150	73	18	25.7	46	-	50	40	3°	2.8	
5750 17011165	-165	2	11	165	88	18	27.3	46	-	50	40	3°	2.8	
5750 17011180	-180	2	11	180	104	18	29.0	46	-	50	40	3°	2.9	
5750 17011195	-195	2	11	195	119	18	30.5	46	-	50	40	3°	3.0	
5750 17012150	HSK100A -PHC12S -150	2	12	150	73	19	26.7	46	-	70	40	3°	2.8	
5750 17012165	-165	2	12	165	88	19	28.3	46	-	70	40	3°	2.8	
5750 17012180	-180	2	12	180	104	19	30.0	46	-	70	40	3°	2.9	
5750 17012195	-195	2	12	195	119	19	31.5	46	-	70	40	3°	3.0	
5750 17016150	HSK100A -PHC16S -150	1	16	150	72	23	30.6	52.5	-	75	40	3°		
5750 17016180	-180	1	16	180	103	23	33.8	52.5	-	80	40	3°		
5750 17016195	-195	1	16	195	119	23	35.5	52.5	-	80	40	3°		
5750 17020150	HSK100A -PHC20S -150	1	20	150	63	28	34.7	62	-	70	40	3°		
5750 17020180	-180	1	20	180	93	28	37.8	62	-	100	40	3°		
5750 17020195	-195	1	20	195	109	28	39.5	62	-	100	40	3°		
5750 17025150	HSK100A -PHC25S -150	1	25	150	65	37	43.9	62	-	70	50	3°		
5750 17025180	-180	1	25	180	96	37	47.1	62	-	100	50	3°		L-6T
5750 17025195	-195	1	25	195	112	37	48.8	62	-	110	50	3°		

1. Tool shank diameter tolerance must be within h6.
2. Do not leave the holder with actuating screw tightened when the chuck is empty.

Tightening torque (Torque wrench : p.498)

model	I.D. (d) mm	Tightening torque (Nm)
PHC·S	06 ~ 12, 16	9 ~ 10
PHC·S	20 ~ 25	23 ~ 24

Hex. Wrench

P. 095

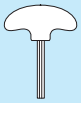

Ordering Example

HSK40A - PHC 12 S - 150

Shank size | I.D. (d) | Projection length (L)

Inch to Metric (mm) → Inch × 25.4
Metric (mm) to Inch → Metric ÷ 25.4 or Metric × 0.03937

Special / Custom Sizes on request

SRE

Shrink Fit (Small Diameter Type)

● Shrinkage method sets a cutting tool firmly by heating and cooling the chuck. High precision and strong chucking. (Small diameter type)

Type1

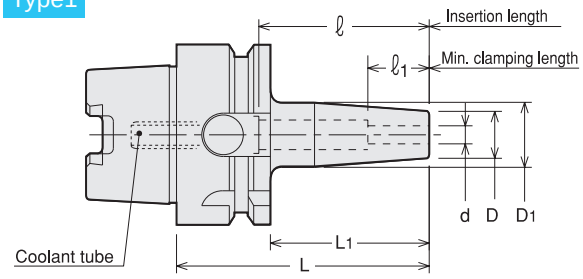

Type2

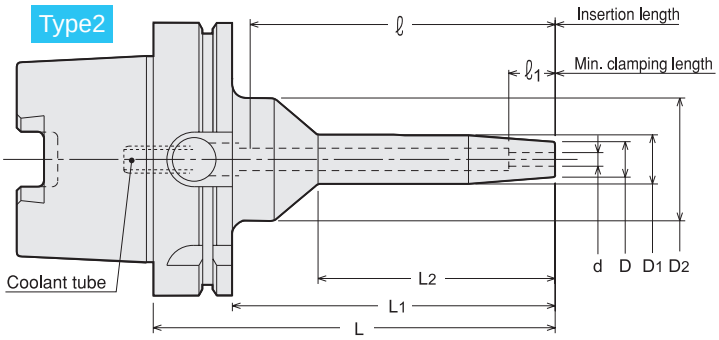

Type3

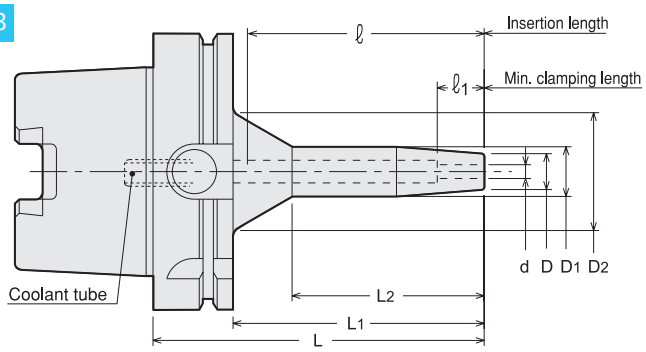

● Coolant tube is included.

Metric Sizes

Unit : Metric

Code	Model	Type	d	L	L1	L2	D	D1	D2	ℓ1	ℓ
5640 51303045	HSK40A -SRE3A -45	1	3	45	25	—	11.5	14.5	30	13	23
5640 51303060	-60	1	3	60	40	—	11.5	14.5	30	13	38
5640 51303090	-90	1	3	90	70	—	11.5	16.5	30	13	68
5640 51303115	-115	1	3	115	95	—	11.5	16.5	30	13	93
5640 51303135	-135	2	3	135	115	74	11.5	16.5	30	13	113
5640 51303150	-150	2	3	150	130	89	11.5	16.5	30	13	128
5640 51304045	HSK40A -SRE4A -45	1	4	45	25	—	12	14.5	30	16	23
5640 51304060	-60	1	4	60	40	—	12	14.5	30	16	38
5640 51304090	-90	1	4	90	70	—	12	16.5	30	16	68
5640 51304115	-115	1	4	115	95	—	12	16.5	30	16	96
5640 51304135	-135	2	4	135	115	74	12	16.5	30	16	113
5640 51304150	-150	2	4	150	130	89	12	16.5	30	16	128
5640 51305045	HSK40A -SRE5A -45	1	5	45	25	—	13	16	30	19	23
5640 51305060	-60	1	5	60	40	—	13	16	30	19	38
5640 51305090	-90	1	5	90	70	—	13	18	30	19	68
5640 51305115	-115	1	5	115	95	—	13	18	30	19	96
5640 51305135	-135	2	5	135	115	74	13	18	30	19	113
5640 51305150	-150	2	5	150	130	89	13	18	30	19	128
5640 51306045	HSK40A -SRE6A -45	1	6	45	25	—	13	16	30	19	23
5640 51306060	-60	1	6	60	40	—	13	16	30	27	38
5640 51306090	-90	1	6	90	70	—	13	18	30	27	68
5640 51306115	-115	1	6	115	95	—	13	18	30	27	96
5640 51306135	-135	2	6	135	115	74	13	18	30	27	113
5640 51306150	-150	2	6	150	130	89	13	18	30	27	128
5640 51308045	HSK40A -SRE8A -45	1	8	45	25	—	13	16	30	19	23
5640 51308060	-60	1	8	60	40	—	13	16	30	27	38
5640 51308090	-90	1	8	90	70	—	13	18	30	27	68
5640 51308115	-115	1	8	115	95	—	13	18	30	27	93
5640 51308135	-135	2	8	135	115	74	13	18	30	27	113
5640 51308150	-150	2	8	150	130	89	13	18	30	27	128

Inch to Metric (mm) → Inch × 25.4
Metric (mm) to Inch → Metric ÷ 25.4 or Metric × 0.03937

Special / Custom Sizes on request

Metric Sizes

Unit : Metric

Code	Model	Type	d	L	L1	L2	D	D1	D2	ℓ1	ℓ
5640 51403050	HSK50A -SRE3A -50	1	3	50	24	—	11.5	14.5	30	13	23
5640 51403070	-70	1	3	70	44	—	11.5	14.5	30	13	43
5640 51403090	-90	1	3	90	64	—	11.5	16.5	30	13	63
5640 51403115	-115	1	3	115	89	—	11.5	16.5	30	13	88
5640 51403135	-135	2	3	135	109	74	11.5	16.5	30	13	108
5640 51403150	-150	2	3	150	124	89	11.5	16.5	30	13	123
5640 51404050	HSK50A -SRE4A -50	1	4	50	24	—	12	14.5	30	16	23
5640 51404070	-70	1	4	70	44	—	12	14.5	30	16	43
5640 51404090	-90	1	4	90	64	—	12	16.5	30	16	63
5640 51404115	-115	1	4	115	89	—	12	16.5	30	16	88
5640 51404135	-135	2	4	135	109	74	12	16.5	30	16	108
5640 51404150	-150	2	4	150	124	89	12	16.5	30	16	123
5640 51405050	HSK50A -SRE5A -50	1	5	50	24	—	13	16	30	19	23
5640 51405070	-70	1	5	70	44	—	13	16	30	19	43
5640 51405090	-90	1	5	90	64	—	13	18	30	19	63
5640 51405115	-115	1	5	115	89	—	13	18	30	19	88
5640 51405135	-135	2	5	135	109	74	13	18	30	19	108
5640 51405150	-150	2	5	150	124	89	13	18	30	19	123
5640 51406050	HSK50A -SRE6A -50	1	6	50	24	—	13	16	30	19	23
5640 51406070	-70	1	6	70	44	—	13	16	30	27	43
5640 51406090	-90	1	6	90	64	—	13	18	30	27	63
5640 51406115	-115	1	6	115	89	—	13	18	30	27	88
5640 51406135	-135	2	6	135	109	74	13	18	30	27	108
5640 51406150	-150	2	6	150	124	89	13	18	30	27	123
5640 51408050	HSK50A -SRE8A -50	1	8	50	24	—	13	16	30	19	23
5640 51408070	-70	1	8	70	44	—	13	16	30	27	43
5640 51408090	-90	1	8	90	64	—	13	18	30	27	63
5640 51408115	-115	1	8	115	89	—	13	18	30	27	88
5640 51408135	-135	2	8	135	109	74	13	18	30	27	108
5640 51408150	-150	2	8	150	124	89	13	18	30	27	123
5640 51503050	HSK63A -SRE3A -50	1	3	50	24	—	12	14.5	30	13	26
5640 51503070	-70	1	3	70	44	—	12	14.5	30	13	46
5640 51503090	-90	1	3	90	64	—	12	16.5	30	13	66
5640 51503120	-120	1	3	120	94	—	12	16.5	30	13	96
5640 51503135	-135	2	3	135	109	59	12	16.5	30	13	111
5640 51503165	-165	2	3	165	139	89	12	16.5	30	13	141
5640 51504050	HSK63A -SRE4A -50	1	4	50	24	—	12	14.5	30	16	26
5640 51504070	-70	1	4	70	44	—	12	14.5	30	16	46
5640 51504090	-90	1	4	90	64	—	12	16.5	30	16	66
5640 51504120	-120	1	4	120	94	—	12	16.5	30	16	96
5640 51504135	-135	2	4	135	109	59	12	16.5	30	16	111
5640 51504165	-165	2	4	165	139	89	12	16.5	30	16	141
5640 51505050	HSK63A -SRE5A -50	1	5	50	24	—	13	16	30	19	26
5640 51505070	-70	1	5	70	44	—	13	16	30	19	46
5640 51505090	-90	1	5	90	64	—	13	18	30	19	66
5640 51505120	-120	1	5	120	94	—	13	18	30	19	96
5640 51505135	-135	2	5	135	109	59	13	18	30	19	111
5640 51505165	-165	2	5	165	139	89	13	18	30	19	141
5640 51506050	HSK63A -SRE6A -50	1	6	50	24	—	13	16	30	19	26
5640 51506070	-70	1	6	70	44	—	13	16	30	27	46
5640 51506090	-90	1	6	90	64	—	13	18	30	27	66
5640 51506120	-120	1	6	120	94	—	13	18	30	27	96
5640 51506135	-135	2	6	135	109	59	13	18	30	27	111
5640 51506165	-165	2	6	165	139	89	13	18	30	27	141
5640 51508050	HSK63A -SRE8A -50	1	8	50	24	—	13	16	30	19	26
5640 51508070	-70	1	8	70	44	—	13	16	30	27	46
5640 51508090	-90	1	8	90	64	—	13	18	30	27	66
5640 51508120	-120	1	8	120	94	—	13	18	30	27	96
5640 51508135	-135	2	8	135	109	59	13	18	30	27	111
5640 51508165	-165	2	8	165	139	89	13	18	30	27	141

1. Always use carbide shank tools with h6 tolerance.
2. Center through coolant is not possible with SRE3A and SRE4A.

Heating device chart

heating device	chuck	
	L1 ≦ 60mm	L1 > 60mm
ISG3400	Yes *	Yes
SRK-HA1, HB2	No	No

*Special induction coil is needed. Refer to P.500-501.

Ordering Example

HSK40A - SRE 6 A - 45

Shank size | I.D. (d) | Projection length (L)

Inch to Metric (mm) → Inch × 25.4
Metric (mm) to Inch → Metric ÷ 25.4 or Metric × 0.03937

Special / Custom Sizes on request

Metric Sizes

Unit : Metric

Code	Model	Type	d	L	L1	L2	D	D1	D2	ℓ1	ℓ
5640 51703090	**HSK100A -SRE3A -90**	3	3	90	61	39	11.5	16.5	41	13	59
5640 51703120	**-120**	3	3	120	91	69	11.5	16.5	41	13	89
5640 51703150	**-150**	2	3	150	121	59	11.5	16.5	45	13	119
5640 51703180	**-180**	2	3	180	151	89	11.5	16.5	45	13	149
5640 51704090	**HSK100A -SRE4A -90**	3	4	90	61	39	12	16.5	41	16	59
5640 51704120	**-120**	3	4	120	91	69	12	16.5	41	16	89
5640 51704150	**-150**	2	4	150	121	59	12	16.5	45	16	119
5640 51704180	**-180**	2	4	180	151	89	12	16.5	45	16	149
5640 51705090	**HSK100A -SRE5A -90**	3	5	90	61	39	13	18	42	19	59
5640 51705120	**-120**	3	5	120	91	69	13	18	42	19	89
5640 51705150	**-150**	2	5	150	121	59	13	18	45	19	119
5640 51705180	**-180**	2	5	180	151	89	13	18	45	19	149
5640 51706090	**HSK100A -SRE6A -90**	3	6	90	61	39	13	18	42	19	59
5640 51706120	**-120**	3	6	120	91	69	13	18	42	27	89
5640 51706150	**-150**	2	6	150	121	59	13	18	45	27	119
5640 51706180	**-180**	2	6	180	151	89	13	18	45	27	149
5640 51708090	**HSK100A -SRE8A -90**	3	8	90	61	39	13	18	42	19	59
5640 51708120	**-120**	3	8	120	91	69	13	18	42	27	89
5640 51708150	**-150**	2	8	150	121	59	13	18	45	27	119
5640 51708180	**-180**	2	8	180	151	89	13	18	45	27	149

1. Always use carbide shank tools with h6 tolerance.
2. Center through coolant is not possible with SRE3A and SRE4A.

Heating device chart

heating device	chuck	
	L1 ≦ 60mm	L1 > 60mm
ISG3400	Yes *	Yes
SRK-HA1, HB2	No	No

*Special induction coil is needed. Refer to P.500-501.

Ordering Example

HSK100A - SRE 3 A - 90

Shank size | I.D. (d) | Projection length (L)

Inch to Metric (mm) → Inch × 25.4
Metric (mm) to Inch → Metric ÷ 25.4 or Metric × 0.03937

Special / Custom Sizes on request

SRK

Shrink Fit (Heavy Type)

● Shrinkage method sets a cutting tool firmly by heating and cooling the chuck. High precision, rigidity and strong chucking. (Heavy Type)

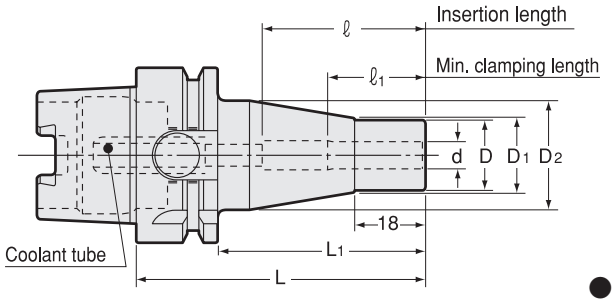

● Coolant tube is included.

Metric Sizes

Unit : Metric

Code	Model	d	L	L1	D	D1	D2	ℓ1	ℓ	kg
5640 13106080	**HSK40A -SRK6A -80**	6	80	60	16	17	30	26	26 ~ 36	0.4
5640 13108080	**HSK40A -SRK8A -80**	8	80	60	19	20	32	26	26 ~ 50	0.4
5640 13010080	**HSK40A -SRK10A -80**	10	80	60	24	25	34	32	32 ~ 50	0.6
5640 13012090	**HSK40A -SRK12A -90**	12	90	70	28	29	34	37	37 ~ 70	0.6
5640 13016090	**HSK40A -SRK16A -90**	16	90	70	32	33	34	40	40 ~ 70	0.7
5640 14106080	**HSK50A -SRK6A -80**	6	80	54	16	17	30	26	26 ~ 36	0.7
5640 14108080	**HSK50A -SRK8A -80**	8	80	54	19	20	32	26	26 ~ 50	0.7
5640 14010085	**HSK50A -SRK10A -85**	10	85	59	24	25	34	32	32 ~ 50	0.8
5640 14012090	**HSK50A -SRK12A -90**	12	90	64	28	29	34	37	37 ~ 65	0.8
5640 14016095	**HSK50A -SRK16A -95**	16	95	69	32	33	34	40	40 ~ 70	0.8
5640 14020100	**HSK50A -SRK20A -100**	20	100	74	36	37	42	42	42 ~ 75	1.0
5640 15106080	**HSK63A -SRK6A -80**	6	80	54	16	17	30	26	26 ~ 36	0.9
5640 15108080	**HSK63A -SRK8A -80**	8	80	54	19	20	32	26	26 ~ 50	0.9
5640 15010085	**HSK63A -SRK10A -85**	10	85	59	24	25	34	32	32 ~ 50	1.0
5640 15012090	**HSK63A -SRK12A -90**	12	90	64	28	29	34	37	37 ~ 63	1.0
5640 15016095	**HSK63A -SRK16A -95**	16	95	69	32	33	34	40	40 ~ 65	1.1
5640 15020100	**HSK63A -SRK20A -100**	20	100	74	36	37	42	42	42 ~ 72	1.3
5640 15025115	**HSK63A -SRK25A -115**	25	115	89	46	47	53	48	48 ~ 89	1.8
5640 17106085	**HSK100A -SRK6A -85**	6	85	56	16	17	30	26	26 ~ 36	1.2
5640 17108085	**HSK100A -SRK8A -85**	8	85	56	19	20	32	26	26 ~ 50	1.2
5640 17010090	**HSK100A -SRK10A -90**	10	90	61	24	25	34	32	32 ~ 50	1.3
5640 17012095	**HSK100A -SRK12A -95**	12	95	66	28	29	34	37	37 ~ 62	1.3
5640 17016100	**HSK100A -SRK16A -100**	16	100	71	32	33	34	40	40 ~ 65	1.4
5640 17020105	**HSK100A -SRK20A -105**	20	105	76	36	37	42	42	42 ~ 70	1.7
5640 17025115	**HSK100A -SRK25A -115**	25	115	86	46	47	53	48	48 ~ 80	2.2
5640 17032120	**HSK100A -SRK32A -120**	32	120	91	56	57	70	51	51 ~ 85	3.0

Always use carbide shank tools with h6 tolerance.

Heating device chart

heating device	chuck	
	SRK6A, SRK8A	SRK10A~SRK32A
ISG3400	Yes	Yes *
SRK-HA1, HB2	No	Yes

*Special induction coil is needed. Refer to P.500-501.

Ordering Example

HSK40A - SRK 12 A - 90

- HSK40A: Shank size
- 12: I.D. (d)
- 90: Projection length (L)

Inch to Metric (mm) → Inch × 25.4
Metric (mm) to Inch → Metric ÷ 25.4 or Metric × 0.03937

Special / Custom Sizes on request

SRD

Shrink Fit (DIN Standard)

● Shrinkage method sets a cutting tool firmly by heating and cooling the chuck. High precision, rigidity and strong chucking. (DIN Type)

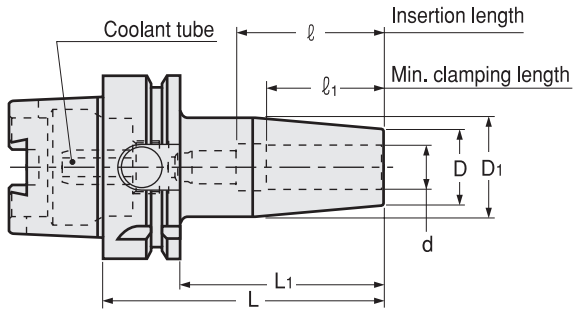

● Coolant tube is included.

Inch Sizes

Unit : Inch

Code	Model	d	L	L1	D	D1	ℓ1	ℓ
5640 43308080	HSK40A -SRD0250 A -80	0.250	3.150	2.362	0.827	1.063	1.024	1.417
5640 43308120	-120	0.250	4.724	3.937	0.827	1.063	1.024	1.417
5640 43308160	-160	0.250	6.299	5.512	0.827	1.063	1.024	1.417
5640 43310080	HSK40A -SRD0312 A -80	0.312	3.150	2.362	0.827	1.063	1.024	1.417
5640 43310120	-120	0.312	4.724	3.937	0.827	1.063	1.024	1.969
5640 43310160	-160	0.312	6.299	5.512	0.827	1.063	1.024	1.969
5640 43312080	HSK40A -SRD0375 A -80	0.375	3.150	2.362	0.945	1.260	1.260	1.654
5640 43312120	-120	0.375	4.724	3.937	0.945	1.260	1.260	1.969
5640 43312160	-160	0.375	6.299	5.512	0.945	1.260	1.260	1.969
5640 43316090	HSK40A -SRD0500 A -90	0.500	3.543	2.756	0.945	1.260	1.457	1.850
5640 43316120	-120	0.500	4.724	3.937	0.945	1.260	1.457	2.756
5640 43316160	-160	0.500	6.299	5.512	0.945	1.260	1.457	2.756
5640 43320090	HSK40A -SRD0625 A -90	0.625	3.543	2.756	1.063	1.339	1.575	1.969
5640 43320120	-120	0.625	4.724	3.937	1.063	1.339	1.575	2.756
5640 43320160	-160	0.625	6.299	5.512	1.063	1.339	1.575	2.756
5640 43508080	HSK63A -SRD0250 A -80	0.250	3.150	2.126	0.827	1.063	1.024	1.417
5640 43508120	-120	0.250	4.724	3.701	0.827	1.063	1.024	1.417
5640 43508160	-160	0.250	6.299	5.276	0.827	1.063	1.024	1.417
5640 43510080	HSK63A -SRD0312 A -80	0.312	3.150	2.126	0.827	1.063	1.024	1.417
5640 43510120	-120	0.312	4.724	3.701	0.827	1.063	1.024	1.969
5640 43510160	-160	0.312	6.299	5.276	0.827	1.063	1.024	1.969
5640 43512085	HSK63A -SRD0375 A -85	0.375	3.346	2.323	0.945	1.260	1.260	1.654
5640 43512120	-120	0.375	4.724	3.701	0.945	1.260	1.260	1.969
5640 43512160	-160	0.375	6.299	5.276	0.945	1.260	1.260	1.969
5640 43516090	HSK63A -SRD0500 A -90	0.500	3.543	2.520	0.945	1.260	1.457	1.850
5640 43516120	-120	0.500	4.724	3.701	0.945	1.260	1.457	2.756
5640 43516160	-160	0.500	6.299	5.276	0.945	1.260	1.457	2.756
5640 43520095	HSK63A -SRD0625 A -95	0.625	3.740	2.717	1.063	1.339	1.575	1.969
5640 43520120	-120	0.625	4.724	3.701	1.063	1.339	1.575	2.756
5640 43520160	-160	0.625	6.299	5.276	1.063	1.339	1.575	3.150
5640 43524095	HSK63A -SRD0750 A -95	0.750	3.740	2.717	1.299	1.654	1.575	1.969
5640 43524120	-120	0.750	4.724	3.701	1.299	1.654	1.575	2.756
5640 43524160	-160	0.750	6.299	5.276	1.299	1.654	1.575	3.150
5640 43528100	HSK63A -SRD0875 A -100	0.875	3.937	2.913	1.299	1.654	1.654	2.047
5640 43528160	-160	0.875	6.299	5.276	1.299	1.654	1.654	3.583
5640 43532115	HSK63A -SRD1000 A -115	1.000	4.528	3.504	1.732	2.087	1.890	2.047
5640 43532160	-160	1.000	6.299	5.276	1.732	2.087	1.890	3.583
5640 43540120	HSK63A -SRD1250 A -120	1.250	4.724	3.701	1.732	2.087	1.890	2.441
5640 43540160	-160	1.250	6.299	5.276	1.732	2.087	1.890	3.819

Inch to Metric (mm) → Inch × 25.4
Metric (mm) to Inch → Metric ÷ 25.4 or Metric × 0.03937

Special / Custom Sizes on request

Inch Sizes

Unit : Inch

Code	Model	d	L	L1	D	D1	ℓ1	ℓ
5640 43708085	HSK100A -SRD0250 A -85	0.250	3.346	2.205	0.827	1.063	1.024	1.417
5640 43708120	-120	0.250	4.724	3.583	0.827	1.063	1.024	1.417
5640 43708160	-160	0.250	6.299	5.157	0.827	1.063	1.024	1.417
5640 43710085	HSK100A -SRD0312 A -85	0.312	3.346	2.205	0.827	1.063	1.024	1.417
5640 43710120	-120	0.312	4.724	3.583	0.827	1.063	1.024	1.969
5640 43710160	-160	0.312	6.299	5.157	0.827	1.063	1.024	1.969
5640 43712090	HSK100A -SRD0375 A -90	0.375	3.543	2.402	0.945	1.260	1.260	1.654
5640 43712120	-120	0.375	4.724	3.583	0.945	1.260	1.260	1.969
5640 43712160	-160	0.375	6.299	5.157	0.945	1.260	1.260	1.969
5640 43716095	HSK100A -SRD0500 A -95	0.500	3.740	2.598	0.945	1.260	1.457	1.850
5640 43716120	-120	0.500	4.724	3.583	0.945	1.260	1.457	2.756
5640 43716160	-160	0.500	6.299	5.157	0.945	1.260	1.457	2.756
5640 43720100	HSK100A -SRD0625 A -100	0.625	3.937	2.795	1.063	1.339	1.575	1.969
5640 43720160	-160	0.625	6.299	5.157	1.063	1.339	1.575	3.150
5640 43724100	HSK100A -SRD0750 A -100	0.750	3.937	2.795	1.299	1.654	1.575	1.969
5640 43724160	-160	0.750	6.299	5.157	1.299	1.654	1.575	3.150
5640 43728105	HSK100A -SRD0875 A -105	0.875	4.134	2.992	1.299	1.654	1.654	1.969
5640 43728160	-160	0.875	6.299	5.157	1.299	1.654	1.654	3.150
5640 43732115	HSK100A -SRD1000 A -115	1.000	4.528	3.386	1.732	2.087	1.890	2.283
5640 43732160	-160	1.000	6.299	5.157	1.732	2.087	1.890	3.661
5640 43740120	HSK100A -SRD1250 A -120	1.250	4.724	3.583	1.732	2.087	1.890	2.283
5640 43740160	-160	1.250	6.299	5.157	1.732	2.087	1.890	3.661
5640 43748120	HSK100A -SRD1500 A -120	1.500	4.724	3.583	1.732	2.087	1.890	2.283
5640 43748160	-160	1.500	6.299	5.157	1.732	2.087	1.890	3.661

Always use carbide shank tools with h6 tolerance.

Heating device chart

heating device	chuck	
	SRD0250A, SRD0312A	SRD0375A~SRD1500A
ISG3400	Yes	Yes
SRK-HA1, HB2	No	Yes

Ordering Example

HSK40A - SRD 0250 A - 120

- HSK40A: Shank size
- 0250: I.D. (d)
- 120: Projection length (L)

Inch to Metric (mm) → Inch × 25.4
Metric (mm) to Inch → Metric ÷ 25.4 or Metric × 0.03937

Special / Custom Sizes on request

SRD

Shrink Fit (DIN Standard)

● Shrinkage method sets a cutting tool firmly by heating and cooling the chuck. High precision, rigidity and strong chucking. (DIN Type)

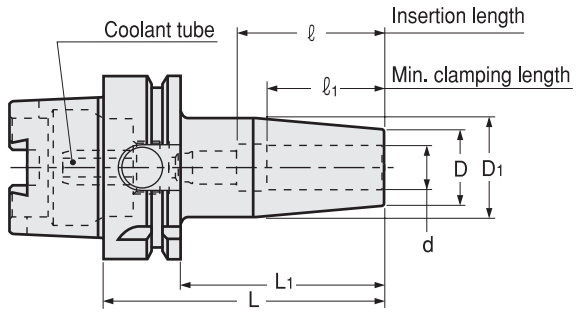

● Coolant tube is included.

Metric Sizes

Unit : Metric

Code	Model	d	L	L1	D	D1	ℓ1	ℓ	kg
5640 41306080	HSK40A -SRD6A -80	6	80	60	21	27	26	26 ~ 36	
5640 41306120	-120	6	120	100	21	27	26	26 ~ 36	
5640 41306160	-160	6	160	140	21	27	26	26 ~ 36	
5640 41308080	HSK40A -SRD8A -80	8	80	60	21	27	26	26 ~ 36	
5640 41308120	-120	8	120	100	21	27	26	26 ~ 50	
5640 41308160	-160	8	160	140	21	27	26	26 ~ 50	
5640 41310080	HSK40A -SRD10A -80	10	80	60	24	32	32	32 ~ 42	
5640 41310120	-120	10	120	100	24	32	32	32 ~ 50	
5640 41310160	-160	10	160	140	24	32	32	32 ~ 50	
5640 41312090	HSK40A -SRD12A -90	12	90	70	24	32	37	37 ~ 47	
5640 41312120	-120	12	120	100	24	32	37	37 ~ 70	
5640 41312160	-160	12	160	140	24	32	37	37 ~ 70	
5640 41314090	HSK40A -SRD14A -90	14	90	70	27	34	37	37 ~ 47	
5640 41314120	-120	14	120	100	27	34	37	37 ~ 70	
5640 41314160	-160	14	160	140	27	34	37	37 ~ 70	
5640 41316090	HSK40A -SRD16A -90	16	90	70	27	34	40	40 ~ 50	
5640 41316120	-120	16	120	100	27	34	40	40 ~ 70	
5640 41316160	-160	16	160	140	27	34	40	40 ~ 70	
5640 41506080	HSK63A -SRD6A -80	6	80	54	21	27	26	26 ~ 36	
5640 41506120	-120	6	120	94	21	27	26	26 ~ 36	
5640 41506160	-160	6	160	134	21	27	26	26 ~ 36	
5640 41508080	HSK63A -SRD8A -80	8	80	54	21	27	26	26 ~ 36	
5640 41508120	-120	8	120	94	21	27	26	26 ~ 50	1.1
5640 41508160	-160	8	160	134	21	27	26	26 ~ 50	
5640 41510085	HSK63A -SRD10A -85	10	85	59	24	32	32	32 ~ 42	
5640 41510120	-120	10	120	94	24	32	32	32 ~ 50	1.2
5640 41510160	-160	10	160	134	24	32	32	32 ~ 50	
5640 41512090	HSK63A -SRD12A -90	12	90	64	24	32	37	37 ~ 47	
5640 41512120	-120	12	120	94	24	32	37	37 ~ 70	1.1
5640 41512160	-160	12	160	134	24	32	37	37 ~ 70	
5640 41514090	HSK63A -SRD14A -90	14	90	64	27	34	37	37 ~ 47	
5640 41514120	-120	14	120	94	27	34	37	37 ~ 70	1.2
5640 41514160	-160	14	160	134	27	34	37	37 ~ 70	
5640 41516095	HSK63A -SRD16A -95	16	95	69	27	34	40	40 ~ 50	
5640 41516120	-120	16	120	94	27	34	40	40 ~ 70	
5640 41516160	-160	16	160	134	27	34	40	40 ~ 80	1.2
5640 41518095	HSK63A -SRD18A -95	18	95	69	33	42	40	40 ~ 50	
5640 41518120	-120	18	120	94	33	42	40	40 ~ 70	
5640 41518160	-160	18	160	134	33	42	40	40 ~ 80	
5640 41520100	HSK63A -SRD20A -100	20	100	74	33	42	42	42 ~ 52	
5640 41520160	-160	20	160	134	33	42	42	42 ~ 91	
5640 41525115	HSK63A -SRD25A -115	25	115	89	44	53	48	48 ~ 62	1.8
5640 41525160	-160	25	160	134	44	53	48	48 ~ 97	
5640 41532120	HSK63A -SRD32A -120	32	120	94	44	53	52	52 ~ 62	1.7
5640 41532160	-160	32	160	134	44	53	52	52 ~ 97	

Inch to Metric (mm) → Inch × 25.4
Metric (mm) to Inch → Metric ÷ 25.4 or Metric × 0.03937

Special / Custom Sizes on request

Metric Sizes

Unit : Metric

Code	Model	d	L	L1	D	D1	ℓ1	ℓ	kg
5640 41706085	HSK100A -SRD6A -85	6	85	56	21	27	26	26 ~ 36	
5640 41706120	-120	6	120	91	21	27	26	26 ~ 36	
5640 41706160	-160	6	160	131	21	27	26	26 ~ 36	
5640 41708085	HSK100A -SRD8A -85	8	85	56	21	27	26	26 ~ 36	
5640 41708120	-120	8	120	91	21	27	26	26 ~ 50	
5640 41708160	-160	8	160	131	21	27	26	26 ~ 50	
5640 41710090	HSK100A -SRD10A -90	10	90	61	24	32	32	32 ~ 42	
5640 41710120	-120	10	120	91	24	32	32	32 ~ 50	
5640 41710160	-160	10	160	131	24	32	32	32 ~ 50	
5640 41712095	HSK100A -SRD12A -95	12	95	66	24	32	37	37 ~ 47	
5640 41712120	-120	12	120	91	24	32	37	37 ~ 65	
5640 41712160	-160	12	160	131	24	32	37	37 ~ 70	
5640 41714095	HSK100A -SRD14A -95	14	95	66	27	34	37	37 ~ 47	
5640 41714120	-120	14	120	91	27	34	37	37 ~ 65	
5640 41714160	-160	14	160	131	27	34	37	37 ~ 70	
5640 41716100	HSK100A -SRD16A -100	16	100	71	27	34	40	40 ~ 50	
5640 41716160	-160	16	160	131	27	34	40	40 ~ 80	
5640 41718100	HSK100A -SRD18A -100	18	100	71	33	42	40	40 ~ 50	
5640 41718160	-160	18	160	131	33	42	40	40 ~ 80	
5640 41720105	HSK100A -SRD20A -105	20	105	76	33	42	42	42 ~ 52	
5640 41720160	-160	20	160	131	33	42	42	42 ~ 91	
5640 41725115	HSK100A -SRD25A -115	25	115	86	44	53	48	48 ~ 58	
5640 41725160	-160	25	160	131	44	53	48	48 ~ 93	
5640 41732120	HSK100A -SRD32A -120	32	120	91	44	53	52	52 ~ 62	
5640 41732160	-160	32	160	131	44	53	52	52 ~ 93	

Always use carbide shank tools with h6 tolerance.

Heating device chart

heating device	chuck	
	SRD6A, SRD8A	SRD10A~SRD32A
ISG3400	Yes	Yes
SRK-HA1, HB2	No	Yes

Ordering Example

HSK40A - SRD 6 A - 120

- HSK40A: Shank size
- 6: I.D. (d)
- 120: Projection length (L)

Inch to Metric (mm) → Inch × 25.4
Metric (mm) to Inch → Metric ÷ 25.4 or Metric × 0.03937

Special / Custom Sizes on request

SRS

Shrink Fit (Slim Type)

● Shrinkage method sets a cutting tool firmly by heating and cooling the chuck. High precision and strong chucking. (Slim Type)

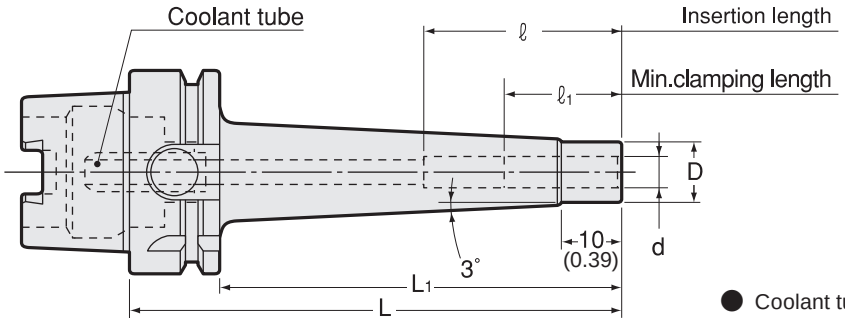

● Coolant tube is included.

Inch Sizes

Unit : Inch

Code	Model			d (mm)	L	L1	D	ℓ1	ℓ
5640 33308090	HSK40A	-SRS0250A	-90	0.250	3.543	2.756	0.354	1.024	1.417
5640 33308120			-120	0.250	4.724	3.937	0.354	1.024	1.417
5640 33310090	HSK40A	-SRS0312A	-90	0.312	3.543	2.756	0.433	1.024	1.969
5640 33310120			-120	0.312	4.724	3.937	0.433	1.024	1.969
5640 33312090	HSK40A	-SRS0375A	-90	0.375	3.543	2.756	0.512	1.260	1.969
5640 33312120			-120	0.375	4.724	3.937	0.512	1.260	1.969
5640 33316090	HSK40A	-SRS0500A	-90	0.500	3.543	2.756	0.591	1.457	2.756
5640 33316120			-120	0.500	4.724	3.937	0.591	1.457	2.756
5640 33320090	HSK40A	-SRS0625A	-90	0.625	3.543	2.756	0.787	1.575	2.756
5640 33320120			-120	0.625	4.724	3.937	0.787	1.575	3.150
5640 33508105	HSK63A	-SRS0250A	-105	0.250	4.134	3.110	0.354	1.024	1.417
5640 33508135			-135	0.250	5.315	4.291	0.354	1.024	1.417
5640 33508165			-165	0.250	6.496	5.472	0.354	1.024	1.417
5640 33510105	HSK63A	-SRS0312A	-105	0.312	4.134	3.110	0.433	1.024	1.969
5640 33510135			-135	0.312	5.315	4.291	0.433	1.024	1.969
5640 33510165			-165	0.312	6.496	5.472	0.433	1.024	1.969
5640 33512105	HSK63A	-SRS0375A	-105	0.375	4.134	3.110	0.512	1.260	1.969
5640 33512135			-135	0.375	5.315	4.291	0.512	1.260	1.969
5640 33512165			-165	0.375	6.496	5.472	0.512	1.260	1.969
5640 33516105	HSK63A	-SRS0500A	-105	0.500	4.134	3.110	0.591	1.457	2.756
5640 33516135			-135	0.500	5.315	4.291	0.591	1.457	2.756
5640 33516165			-165	0.500	6.496	5.472	0.591	1.457	2.756
5640 33520105	HSK63A	-SRS0625A	-105	0.625	4.134	3.110	0.787	1.575	2.953
5640 33520135			-135	0.625	5.315	4.291	0.787	1.575	3.150
5640 33520165			-165	0.625	6.496	5.472	0.787	1.575	3.150
5640 33524105	HSK63A	-SRS0750A	-105	0.750	4.134	3.110	1.024	1.654	2.953
5640 33524135			-135	0.750	5.315	4.291	1.024	1.654	3.937
5640 33524165			-165	0.750	6.496	5.472	1.024	1.654	3.937
5640 33708105	HSK100A	-SRS0250A	-105	0.250	4.134	2.795	0.354	1.024	1.417
5640 33708135			-135	0.250	5.315	3.976	0.354	1.024	1.417
5640 33708165			-165	0.250	6.496	5.157	0.354	1.024	1.417
5640 33710105	HSK100A	-SRS0312A	-105	0.312	4.134	2.795	0.433	1.024	1.969
5640 33710135			-135	0.312	5.315	3.976	0.433	1.024	1.969
5640 33710165			-165	0.312	6.496	5.157	0.433	1.024	1.969
5640 33712105	HSK100A	-SRS0375A	-105	0.375	4.134	2.795	0.512	1.260	1.969
5640 33712135			-135	0.375	5.315	3.976	0.512	1.260	1.969
5640 33712165			-165	0.375	6.496	5.157	0.512	1.260	1.969
5640 33712195			-195	0.375	7.677	6.339	0.512	1.260	1.969
5640 33716105	HSK100A	-SRS0500A	-105	0.500	4.134	2.795	0.591	1.457	2.756
5640 33716135			-135	0.500	5.315	3.976	0.591	1.457	2.756
5640 33716165			-165	0.500	6.496	5.157	0.591	1.457	2.756
5640 33716195			-195	0.500	7.677	6.339	0.591	1.457	2.756
5640 33720105	HSK100A	-SRS0625A	-105	0.625	4.134	2.795	0.787	1.575	2.756
5640 33720135			-135	0.625	5.315	3.976	0.787	1.575	3.150
5640 33720165			-165	0.625	6.496	5.157	0.787	1.575	3.150
5640 33720195			-195	0.625	7.677	6.339	0.787	1.575	3.150
5640 33724105	HSK100A	-SRS0750A	-105	0.750	4.134	2.795	1.024	1.654	2.756
5640 33724135			-135	0.750	5.315	3.976	1.024	1.654	3.937
5640 33724165			-165	0.750	6.496	5.157	1.024	1.654	3.937
5640 33724195			-195	0.750	7.677	6.339	1.024	1.654	3.937

Inch to Metric (mm) → Inch × 25.4
Metric (mm) to Inch → Metric ÷ 25.4 or Metric × 0.03937

Special / Custom Sizes on request

Metric Sizes

Unit : Metric

Code	Model	d	L	L1	D	ℓ1	ℓ	kg
5640 31306090	HSK40A -SRS6A -90	6	90	70	9	26	26 ~ 36	0.5
5640 31306120	-120	6	120	100	9	26	26 ~ 36	0.5
5640 31308090	HSK40A -SRS8A -90	8	90	70	11	26	26 ~ 50	0.5
5640 31308120	-120	8	120	100	11	26	26 ~ 50	0.5
5640 31310090	HSK40A -SRS10A -90	10	90	70	13	32	32 ~ 50	0.5
5640 31310120	-120	10	120	100	13	32	32 ~ 50	0.5
5640 31312090	HSK40A -SRS12A -90	12	90	70	15	37	37 ~ 70	0.5
5640 31312120	-120	12	120	100	15	37	37 ~ 70	0.6
5640 31316090	HSK40A -SRS16A -90	16	90	70	20	40	40 ~ 70	0.6
5640 31316120	-120	16	120	100	20	40	40 ~ 80	0.6
5640 31406090	HSK50A -SRS6A -90	6	90	64	9	26	26 ~ 36	0.6
5640 31406120	-120	6	120	94	9	26	26 ~ 36	0.6
5640 31408090	HSK50A -SRS8A -90	8	90	64	11	26	26 ~ 50	0.6
5640 31408120	-120	8	120	94	11	26	26 ~ 50	0.6
5640 31410090	HSK50A -SRS10A -90	10	90	64	13	32	32 ~ 50	0.7
5640 31410120	-120	10	120	94	13	32	32 ~ 50	0.7
5640 31412090	HSK50A -SRS12A -90	12	90	64	15	37	37 ~ 65	0.7
5640 31412120	-120	12	120	94	15	37	37 ~ 70	0.8
5640 31416105	HSK50A -SRS16A -105	16	105	79	20	40	40 ~ 80	0.8
5640 31416135	-135	16	135	109	20	40	40 ~ 80	0.9
5640 31420105	HSK50A -SRS20A -105	20	105	79	26	42	42 ~ 80	0.9
5640 31420135	-135	20	135	109	26	42	42 ~ 100	1.0
5640 31506105	HSK63A -SRS6A -105	6	105	79	9	26	26 ~ 36	0.7
5640 31506135	-135	6	135	109	9	26	26 ~ 36	0.7
5640 31506165	-165	6	165	139	9	26	26 ~ 36	0.7
5640 31508105	HSK63A -SRS8A -105	8	105	79	11	26	26 ~ 50	0.8
5640 31508135	-135	8	135	109	11	26	26 ~ 50	0.8
5640 31508165	-165	8	165	139	11	26	26 ~ 50	0.8
5640 31510105	HSK63A -SRS10A -105	10	105	79	13	32	32 ~ 50	0.9
5640 31510135	-135	10	135	109	13	32	32 ~ 50	1.0
5640 31510165	-165	10	165	139	13	32	32 ~ 50	1.1
5640 31512105	HSK63A -SRS12A -105	12	105	79	15	37	37 ~ 70	1.0
5640 31512135	-135	12	135	109	15	37	37 ~ 70	1.0
5640 31512165	-165	12	165	139	15	37	37 ~ 70	1.1
5640 31516105	HSK63A -SRS16A -105	16	105	79	20	40	40 ~ 75	1.2
5640 31516135	-135	16	135	109	20	40	40 ~ 80	1.3
5640 31516165	-165	16	165	139	20	40	40 ~ 80	1.5
5640 31520105	HSK63A -SRS20A -105	20	105	79	26	42	42 ~ 75	1.1
5640 31520135	-135	20	135	109	26	42	42 ~ 100	1.2
5640 31520165	-165	20	165	139	26	42	42 ~ 100	1.3
5640 31706105	HSK100A -SRS6A -105	6	105	71	9	26	26 ~ 36	2.2
5640 31706135	-135	6	135	101	9	26	26 ~ 36	2.2
5640 31706165	-165	6	165	131	9	26	26 ~ 36	2.2
5640 31708105	HSK100A -SRS8A -105	8	105	71	11	26	26 ~ 50	2.3
5640 31708135	-135	8	135	101	11	26	26 ~ 50	2.3
5640 31708165	-165	8	165	131	11	26	26 ~ 50	2.3
5640 31710105	HSK100A -SRS10A -105	10	105	71	13	32	32 ~ 50	2.4
5640 31710135	-135	10	135	101	13	32	32 ~ 50	2.4
5640 31710165	-165	10	165	131	13	32	32 ~ 50	2.6
5640 31710195	-195	10	195	161	13	32	32 ~ 50	2.6
5640 31712105	HSK100A -SRS12A -105	12	105	71	15	37	37 ~ 70	2.4
5640 31712135	-135	12	135	101	15	37	37 ~ 70	2.5
5640 31712165	-165	12	165	131	15	37	37 ~ 70	2.6
5640 31712195	-195	12	195	161	15	37	37 ~ 70	2.7
5640 31716105	HSK100A -SRS16A -105	16	105	71	20	40	40 ~ 70	2.5
5640 31716135	-135	16	135	101	20	40	40 ~ 80	2.6
5640 31716165	-165	16	165	131	20	40	40 ~ 80	2.8
5640 31716195	-195	16	195	161	20	40	40 ~ 80	2.9
5640 31720105	HSK100A -SRS20A -105	20	105	71	26	42	42 ~ 70	2.6
5640 31720135	-135	20	135	101	26	42	42 ~ 100	2.7
5640 31720165	-165	20	165	131	26	42	42 ~ 100	2.8
5640 31720195	-195	20	195	161	26	42	42 ~ 100	2.9

Always use carbide shank tools with h6 tolerance.

Heating device chart

heating device	chuck	
	SRS0250A, SRS0312A SRS6A, SRS8A	SRS0375A~SRS0750A SRS10A~SRS20A
ISG3400	Yes	Yes
SRK-HA1, HB2	No	Yes

Ordering Example

HSK40A - SRS 12 A - 105

- HSK40A: Shank size
- 12: I.D. (d)
- 105: Projection length (L)

Inch to Metric (mm) → Inch × 25.4
Metric (mm) to Inch → Metric ÷ 25.4 or Metric × 0.03937

Special / Custom Sizes on request

STM

Synchronous Tap Holder With Easy Tool Length Adjustment

● Projection length of the cutting tool can be adjusted by simply turning circumference of the holder.

Type1

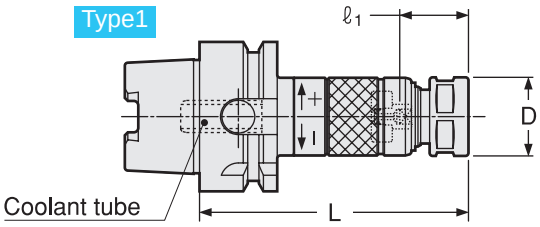

Type2

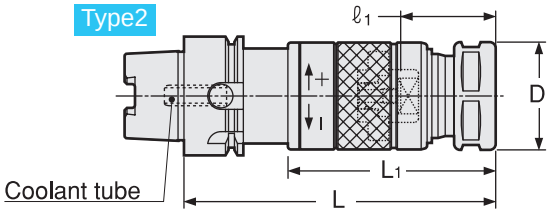

Type3

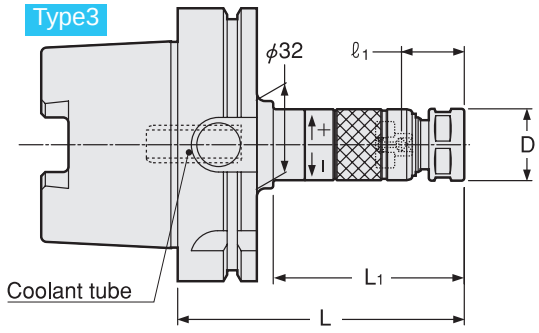

⚠ For capable tap sizes, please refer to P.462-464 chart.

（NOTE） Nut O.D. of STM8 is 19mm.

STM Holder + Collet + STS Driver

● Coolant tube is included.

Unit : Metric

Code	Model	Type	Tap Size	L	L1	D	Nut	kg	Collet	Preset Driver	Spanner
5610 13000075	HSK40A -STM8 -75 *	1	Old JIS Taps M4~8 U No8~5/16 OSG Synchro Taps M4~6	75	—	21	KDP-1414		FDC-07	STS-8	Flat 17mm width
5610 13000090	-90	1		90	—	21	KDP-1414				
5610 13000005	-105	1		105	—	21	KDP-1414				
5610 13000020	-120	1		120	—	21	KDP-1414				
5610 13100075	HSK40A -STM12 -75 *	1	Old JIS Taps M4~12 U No8~7/16 PT1/8 OSG Synchro Taps M4~10	75	—	26	HTP-09		FSC-09	STS-12	S-1L
5610 13100090	-90	1		90	—	26	HTP-09				
5610 13100005	-105	1		105	—	26	HTP-09				
5610 13100020	-120	1		120	—	26	HTP-09				
5610 13300005	HSK40A -STM18 -105	2	Old JIS Taps M14~18 U1/2~3/4 PT1/4~3/8 OSG Synchro Taps M12~14	105	70	36	HTP-16	0.6	FSC-16	STS-18	S-4L
5610 13300020	-120	2		120	85	36	HTP-16				
5610 13300035	-135	2		135	100	36	HTP-16				
5610 13300050	-150	2		150	115	36	HTP-16				
5610 14000075	HSK50A -STM8 -75 *	1	Old JIS Taps M4~8 U No8~5/16 OSG Synchro Taps M4~6	75	—	21	KDP-1414		FDC-07	STS-8	Flat 17mm width
5610 14000090	-90	1		90	—	21	KDP-1414	0.6			
5610 14000005	-105	1		105	—	21	KDP-1414	0.6			
5610 14000020	-120	1		120	—	21	KDP-1414				
5610 14100090	HSK50A -STM12 -90	1	Old JIS Taps M4~12 U No8~7/16 PT1/8 OSG Synchro Taps M4~10	90	—	26	HTP-09	0.6	FSC-09	STS-12	S-1L
5610 14100005	-105	1		105	—	26	HTP-09	0.7			
5610 14100020	-120	1		120	—	26	HTP-09				
5610 14300005	HSK50A -STM18 -105	1	Old JIS Taps M14~18 U1/2~3/4 PT1/4~3/8 OSG Synchro Taps M12~14	105	—	36	HTP-16	0.8	FSC-16	STS-18	S-4L
5610 14300020	-120	1		120	—	36	HTP-16	0.9			
5610 14300035	-135	1		135	—	36	HTP-16	1.0			
5610 14300050	-150	1		150	—	36	HTP-16				
5610 15000075	HSK63A -STM8 -75 *	1	Old JIS Taps M4~8 U No8~5/16 OSG Synchro Taps M4~6	75	—	21	KDP-1414		FDC-07	STS-8	Flat 17mm width
5610 15000090	-90	1		90	—	21	KDP-1414				
5610 15000005	-105	1		105	—	21	KDP-1414				
5610 15000020	-120	1		120	—	21	KDP-1414				
5610 15000035	-135	1		135	—	21	KDP-1414				
5610 15000050	-150	1		150	—	21	KDP-1414				
5610 15100090	HSK63A -STM12 -90	1	Old JIS Taps M4~12 U No8~7/16 PT1/8 OSG Synchro Taps M4~10	90	—	26	HTP-09	0.9	FSC-09	STS-12	S-1L
5610 15100005	-105	1		105	—	26	HTP-09	0.9			
5610 15100020	-120	1		120	—	26	HTP-09	1.0			
5610 15100035	-135	1		135	—	26	HTP-09	1.0			
5610 15100050	-150	1		150	—	26	HTP-09	1.1			
5610 15100080	-180	1		180	—	26	HTP-09	1.2			
5610 15300005	HSK63A -STM18 -105	1	Old JIS Taps M14~18 U1/2~3/4 PT1/4~3/8 OSG Synchro Taps M12~14	105	—	36	HTP-16	1.1	FSC-16	STS-18	S-4L
5610 15300020	-120	1		120	—	36	HTP-16	1.2			
5610 15300035	-135	1		135	—	36	HTP-16	1.3			
5610 15300050	-150	1		150	—	36	HTP-16	1.4			
5610 15300080	-180	1		180	—	36	HTP-16				
5610 15400020	HSK63A -STM30 -120	1	Old JIS Taps M20~30 U7/8~1-1/8 PT1/2~3/4 OSG Synchro Taps M16~27	120	—	46	HTP-22	1.4	FSC-22	STS-30	S-5L
5610 15400035	-135	1		135	—	46	HTP-22				
5610 15400050	-150	1		150	—	46	HTP-22				
5610 15400080	-180	1		180	—	46	HTP-22				
5610 17000090	HSK100A -STM8 -90 *	3	Old JIS Taps M4~8 U No8~5/16 OSG Synchro Taps M4~6	90	53	21	KDP-1414		FDC-07	STS-8	Flat 17mm width
5610 17000005	-105	3		105	68	21	KDP-1414				
5610 17000020	-120	3		120	83	21	KDP-1414				
5610 17000035	-135	3		135	98	21	KDP-1414				
5610 17000050	-150	3		150	113	21	KDP-1414				
5610 17000065	-165	3		165	128	21	KDP-1414				

Inch to Metric (mm) → Inch × 25.4
Metric (mm) to Inch → Metric ÷ 25.4 or Metric × 0.03937

Special / Custom Sizes on request

Unit : Metric

Code	Model	Type	Tap Size	L	L1	D	Nut	kg	Collet	Preset Driver	Spanner
5610 17100090	HSK100A -STM12 -90 ＊	3	Old JIS Taps M4~12 U No8~7/16 PT1/8 OSG Synchro Taps M4~10	90	53	26	HTP-09		FSC-09	STS-12	S-1L
5610 17100005	-105	3		105	68	26	HTP-09	2.3			
5610 17100020	-120	3		120	83	26	HTP-09				
5610 17100035	-135	3		135	98	26	HTP-09				
5610 17100050	-150	3		150	113	26	HTP-09				
5610 17100080	-180	3		180	143	26	HTP-09				
5610 17300005	HSK100A -STM18 -105	1	Old JIS Taps M14~18 U1/2~3/4 PT1/4~3/8 OSG Synchro Taps M12~14	105	—	36	HTP-16	2.4	FSC-16	STS-18	S-4L
5610 17300020	-120	1		120	—	36	HTP-16				
5610 17300035	-135	1		135	—	36	HTP-16				
5610 17300050	-150	1		150	—	36	HTP-16				
5610 17300080	-180	1		180	—	36	HTP-16				
5610 17400020	HSK100A -STM30 -120	1	Old JIS Taps M20~30 U7/8~1-1/8 PT1/2~3/4 OSG Synchro Taps M16~27	120	—	46	HTP-22	2.7	FSC-22	STS-30	S-5L
5610 17400035	-135	1		135	—	46	HTP-22				
5610 17400050	-150	1		150	—	46	HTP-22				
5610 17400080	-180	1		180	—	46	HTP-22	3.5			
5610 17400010	-210	1		210	—	46	HTP-22	3.8			

1.Collet, spanner and preset driver are sold separately.
2.Please see below for ℓ1dimension.
3.Tap holes smaller than M4 can be made by STM8. Collets to be used are as follows.
M1-M2.6: FDC-03007- ※※ M3-M3.5: FDC-04007- ※※
Tap drive will not be used for the above usages.

Collet P.336



Preset driver P.334-335



Ordering Example

HSK40A - STM 8 - 90
Shank size / Holder size / Projection length (L)

ℓ1 Dimension for STM

Old JIS Taps

Without center-through coolant

Tap sizes	ℓ1	ℓ1(＊)
M4 ~ 6 U No.8 ~ 1/4	21 ~ 35	21 ~ 26
M7 ~ 12 U 5/16 ~ U7/16 PT1/8	23 ~ 37	23 ~ 28
M13 ~ 15 U 1/2 ~ 5/8 PT1/4	28 ~ 42	-
M16 ~ 17	32 ~ 45	-
M18 ~ 27 U 3/4 ~ U1 PT3/8 ~ 5/8	33 ~ 47	-
M30 U1-1/8 PT3/4	38 ~ 52	-

With center-through coolant (STM8)

Tap sizes	ℓ1	ℓ1(＊)
M4 ~ 6 U No.8 ~ 1/4	25 ~ 35	25 ~ 26
M7 ~ 8 U5/16	26 ~ 37	26 ~ 28

With center-through coolant (STM12 ~ 30)

Tap sizes	ℓ1	ℓ1(＊)
M4 ~ 6 U No.8 ~ 1/4	24 ~ 35	24 ~ 26
M7 ~ 10 U 5/16 ~ 3/8	25 ~ 37	25 ~ 28
M11 ~ 12 U 7/16 PT 1/8	26 ~ 37	26 ~ 28
U1/2	32 ~ 42	-
M13 ~ 15 U9/16	33 ~ 42	-
U5/8 PT1/4	34 ~ 42	-
M16	35 ~ 46	-
M18 U 3/4 PT3/8	36 ~ 47	-
M20 ~ 21 PT1/2	40 ~ 47	-
M22 U 7/8	41 ~ 47	-
M23	42 ~ 47	-
M24 ~ 25 PT5/8	43 ~ 47	-
M26 ~ 27 U1	44 ~ 47	-
M28	45 ~ 52	-
M30 PT3/4	46 ~ 52	-
U 1-1/8	48 ~ 52	-

OSG Synchro Taps

Without center-through coolant

Tap sizes	ℓ1	ℓ1(＊)
M4 ~ 6	21 ~ 35	21 ~ 26
M8 ~ 10	23 ~ 37	23 ~ 28
M12 ~ 14	28 ~ 42	-
M16 ~ 27	33 ~ 47	-

With center-through coolant (STM8)

Tap sizes	ℓ1	ℓ1(＊)
M4 ~ 6	25 ~ 35	25 ~ 26

With center-through coolant (STM12 ~ 30)

Tap sizes	ℓ1	ℓ1(＊)
M4 ~ 6	24 ~ 35	24 ~ 26
M8 ~ 10	26 ~ 37	26 ~ 28
M12	33 ~ 42	-
M14	34 ~ 42	-
M16 ~ 20	40 ~ 46	-
M22 ~ 27	44 ~ 47	-

YAMAWA X Series

Without center-through coolant

Tap sizes	ℓ1	ℓ1(＊)
M6 M8	23 ~ 37	23 ~ 28
M10 M12	28 ~ 42	-

With center-through coolant (STM8)

Tap sizes	ℓ1	ℓ1(＊)
M6	26 ~ 37	26 ~ 28

With center-through coolant (STM12 ~ 30)

Tap sizes	ℓ1	ℓ1(＊)
M6	25 ~ 37	25 ~ 28
M8	26 ~ 37	26 ~ 28
M10	33 ~ 42	-
M12	34 ~ 42	-

Inch to Metric (mm) → Inch × 25.4
Metric (mm) to Inch → Metric ÷ 25.4 or Metric × 0.03937

Special / Custom Sizes on request

Tap size reference chart (collet, preset driver)

FDC-07 or FSC - collet

OH Type

● OH type collet should be used for center-through coolant feeding and external coolant feeding.

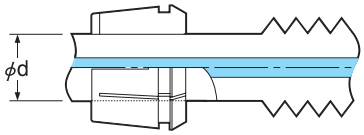

C Type

● when "collet-through" coolant feeding is needed.

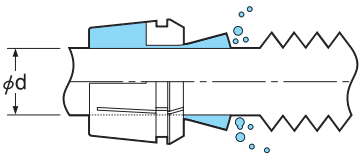

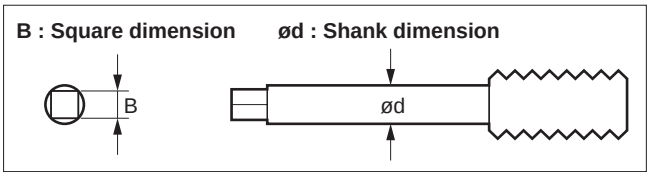

※ Please select OH type for non-coolant use.

preset driver & tool for changing driver

STS Type

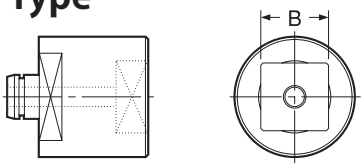

STS-R Type

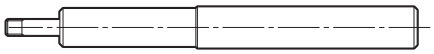

Holder Model	Tap Size (ANSI)	ød (inch)	ød (mm)	Collet Model (OH or C)	B (inch)	B (mm)	Preset Driver
STM8	#0-6	0.141	3.5814	FDC-03607**	0.110	2.794	STS8- □ 2.8
	#8	0.168	4.2672	FDC-04307**	0.131	3.3274	STS8- □ 3.4
	#10	0.194	4.9276	FDC-05007**	0.152	3.8608	STS8- □ 4.0
	#12	0.22	5.588	FDC-05607**	0.165	4.191	STS8- □ 4.2
	1/4	0.255	6.477	FDC-06507**	0.191	4.8514	STS8- □ 5.0
STM12	#0-6	0.141	3.5814	FSC-09-3.6**	0.110	2.794	STS12- □ 2.8
	#8	0.168	4.2672	FSC-09-4.3**	0.131	3.3274	STS12- □ 3.4
	#10	0.194	4.9276	FSC-09-5.0**	0.152	3.8608	STS12- □ 4.0
	#12	0.22	5.588	FSC-09-5.6**	0.165	4.191	STS12- □ 4.2
	1/4	0.255	6.477	FSC-09-6.5**	0.191	4.8514	STS12- □ 5.0
	1/8SPT	0.313	7.9502	FSC-09-8.0**	0.234	5.9436	STS12- □ 6.0
	5/16	0.318	8.0772	FSC-09-8.1**	0.238	6.0452	STS12- □ 6.1
	7/16	0.323	8.2042	FSC-09-8.3**	0.242	6.1468	STS12- □ 6.2
STM18	1/2	0.367	9.3218	FSC-16-9.4**	0.275	6.985	STS18- □ 7.0
	3/8	0.381	9.6774	FSC-16-9.7**	0.286	7.2644	STS18- □ 7.3
	9/16	0.429	10.8966	FSC-16-10.9**	0.322	8.1788	STS18- □ 8.2
	1/8LPT	0.437	11.0998	FSC-16-11.1**	0.328	8.3312	STS18- □ 8.4
	5/8	0.48	12.192	FSC-16-12.2**	0.360	9.144	STS18- □ 9.2
	11/16	0.542	13.7668	FSC-16-13.8**	0.406	10.3124	STS18- □ 10.4
	1/4PT	0.562	14.2748	FSC-16-14.3**	0.421	10.6934	STS18- □ 10.7
STM30	3/4	0.59	14.986	FSC-22-15.0**	0.442	11.2268	STS30- □ 11.3
	13/16	0.652	16.5608	FSC-22-16.6**	0.489	12.4206	STS30- □ 12.5
	7/8	0.697	17.7038	FSC-22-17.8**	0.523	13.2842	STS30- □ 13.3
	3/8PT	0.7	17.78	FSC-22-17.8**	0.531	13.4874	STS30- □ 13.5
	1	0.8	20.32	FSC-22-20.4**	0.600	15.24	STS30- □ 15.3

For DIN and ISO, please refer to P.463-464.

Ordering Example

FSC - 22 - 20.4 - OH

- 22: Collet size
- 20.4: Collet I.D. (d)
- OH: for tool with coolant hole
- C: for collet through

Combination of accessories

Tap holder	Collet	Preset driver		Nut		Tool changing driver		Spanner	
Model	Model	Model	Code	Model	Code	Model	Code	Model	Code
STM8	**FDC-07**	STS8	3914 0100**03	KDP-1414	0070 01001407	**STS-R0**	3914 00000006	**Flat 17mm width**	
STM12	**FSC-09**	STS12	3914 1100**03	**HTP-09**	1314 00000009	**STS-R1**	3914 10000006	**S-1L**	0803 00000011
STM18	**FSC-16**	STS18	3914 310***03	**HTP-16**	1314 00000016	**STS-R2**	3914 30000006	**S-4L**	0803 00000014
STM30	**FSC-22**	STS30	3914 410***03	**HTP-22**	1314 00000022	**STS-R2**	3914 30000006	**S-5L**	0803 00000015

Inch to Metric (mm) → Inch × 25.4
Metric (mm) to Inch → Metric ÷ 25.4 or Metric × 0.03937

Special / Custom Sizes on request

Tap size reference chart (collet, preset driver)

FDC-07 or FSC - collet

OH Type

● OH type collet should be used for center-through coolant feeding and external coolant feeding.

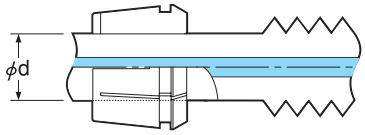

C Type

● when "collet-through" coolant feeding is needed.

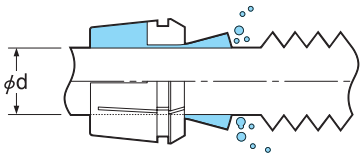

※ Please select OH type for non-coolant use.

preset driver & tool for changing driver

STS Type

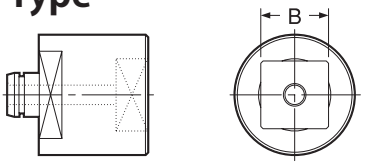

STS-R Type

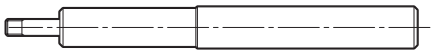

Holder Model	Tap Size					ød	Collet Model (OH or C)	B	Preset Driver	Tool for Changing Driver
	Old JIS Taps			OSG Synchro-Taps	YAMAWA X Series					
	Metric Thread	Unified Thread	Pipe Taper Thread							
STM8	M4~M4.5	UNo.8				5.0	FDC-05007-**	4.0	STS8-□4.0	STS-R0
	M5~M5.5	UNo.10~12				5.5	FDC-05507-**	4.5	STS8-□4.5	STS-R0
	M6	U1/4		M4~M6		6.0	FDC-06007-**	4.5	STS8-□4.5	STS-R0
					M6	6.0	FDC-06007-**	4.9	STS8-□4.9	STS-R0
		U5/16				6.1	FDC-06107-**	5.0	STS8-□5.0	STS-R0
	M7~8					6.2	FDC-06207-**	5.0	STS8-□5.0	STS-R0
STM12	M4~M4.5	UNo.8				5.0	FSC-09-5.0-**	4.0	STS12-□4.0	STS-R1
	M5~M5.5	UNo.10~12				5.5	FSC-09-5.5-**	4.5	STS12-□4.5	STS-R1
	M6	U1/4		M4~M6		6.0	FSC-09-6.0-**	4.5	STS12-□4.5	STS-R1
					M6	6.0	FSC-09-6.0-**	4.9	STS12-□4.9	STS-R1
		U5/16				6.1	FSC-09-6.1-**	5.0	STS12-□5.0	STS-R1
	M7~8					6.2	FSC-09-6.2-**	5.0	STS12-□5.0	STS-R1
	M9~M10	U3/8				7.0	FSC-09-7.0-**	5.5	STS12-□5.5	STS-R1
					M8	8.0	FSC-09-8.0-**	6.2	STS12-□6.2	STS-R1
	M11	U7/16	PT1/16~1/8	M8~M10		8.0	FSC-09-8.0-**	6.0	STS12-□6.0	STS-R1
	M12					8.5	FSC-09-8.5-**	6.5	STS12-□6.5	STS-R1
STM18		U1/2				9.0	FSC-16-9.0-**	7.0	STS18-□7.0	STS-R2
	M13					9.5	FSC-16-9.5-**	7.0	STS18-□7.0	STS-R2
				M12	M10	10.0	FSC-16-10.0-**	8.0	STS18-□8.0	STS-R2
	M14~15	U9/16				10.5	FSC-16-10.5-**	8.0	STS18-□8.0	STS-R2
			PT1/4			11.0	FSC-16-11.0-**	9.0	STS18-□9.0	STS-R2
		U5/8		M14	M12	12.0	FSC-16-12.0-**	9.0	STS18-□9.0	STS-R2
	M16					12.5	FSC-16-12.5-**	10.0	STS18-□10.0	STS-R2
	M17					13.0	FSC-16-13.0-**	10.0	STS18-□10.0	STS-R2
	M18~M19	U3/4	PT3/8			14.0	FSC-16-14.0-**	11.0	STS18-□11.0	STS-R2
STM30	M20					15.0	FSC-22-15.0-**	12.0	STS30-□12.0	STS-R2
	M21			M16~M20		16.0	FSC-22-16.0-**	12.0	STS30-□12.0	STS-R2
	M22	U7/8				17.0	FSC-22-17.0-**	13.0	STS30-□13.0	STS-R2
	M23		PT1/2			18.0	FSC-22-18.0-**	14.0	STS30-□14.0	STS-R2
	M24~M25		PT5/8			19.0	FSC-22-19.0-**	15.0	STS30-□15.0	STS-R2
	M26~M27	U1		M22~M27		20.0	FSC-22-20.0-**	15.0	STS30-□15.0	STS-R2
	M28					21.0	FSC-22-21.0-**	17.0	STS30-□17.0	STS-R2
		U1-1/8				22.0	FSC-22-22.0-**	17.0	STS30-□17.0	STS-R2
	M30		PT3/4			23.0	FSC-22-23.0-**	17.0	STS30-□17.0	STS-R2

Ordering Example

FSC - 22 - 20.0 - OH

- 22: Collet size
- 20.0: Collet I.D. (d)
- OH: for tool with coolant hole; C: for collet through

Combination of accessories

Tap holder	Collet	Preset driver		Nut		Tool changing driver		Spanner	
Model	Model	Model	Code	Model	Code	Model	Code	Model	Code
STM8	FDC-07	STS8	3914 0100**03	KDP-1414	0070 01001407	STS-R0	3914 00000006	Flat 17mm width	
STM12	FSC-09	STS12	3914 1100**03	HTP-09	1314 00000009	STS-R1	3914 10000006	S-1L	0803 00000011
STM18	FSC-16	STS18	3914 310***03	HTP-16	1314 00000016	STS-R2	3914 30000006	S-4L	0803 00000014
STM30	FSC-22	STS30	3914 410***03	HTP-22	1314 00000022	STS-R2	3914 30000006	S-5L	0803 00000015

Inch to Metric (mm) → Inch × 25.4
Metric (mm) to Inch → Metric ÷ 25.4 or Metric × 0.03937

Special / Custom Sizes on request

FSC

Collet For Tapper

FSC-OH

For tool with coolant hole

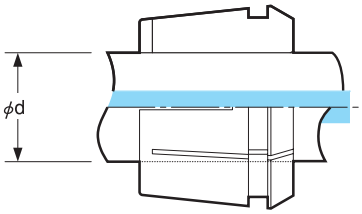

Tool Shank Dia.		Size	Code
ød (inch)	ød (mm)		
ø 0.141	ø 3.6	**FSC-09-3.6-OH**	—
ø 0.168	ø 4.3	**FSC-09-4.3-OH**	1334 00104309
ø 0.194	ø 5.0	**FSC-09-5.0-OH**	1334 00105009
ø 0.220	ø 5.6	**FSC-09-5.6-OH**	1334 00105609
ø 0.216	ø 5.5	**FSC-09-5.5-OH**	1334 00105509
ø 0.236	ø 6.0	**FSC-09-6.0-OH**	1334 00106009
ø 0.240	ø 6.1	**FSC-09-6.1-OH**	1334 00106109
ø 0.244	ø 6.2	**FSC-09-6.2-OH**	1334 00106209
ø 0.255	ø 6.5	**FSC-09-6.5-OH**	1334 00106509
ø 0.275	ø 7.0	**FSC-09-7.0-OH**	1334 00107009
ø 0.314	ø 8.0	**FSC-09-8.0-OH**	1334 00108009
ø 0.313	ø 8.0	**FSC-09-8.0-OH**	1334 00108009
ø 0.318	ø 8.1	**FSC-09-8.1-OH**	1334 00108109
ø 0.323	ø 8.3	**FSC-09-8.3-OH**	1334 00108309
ø 0.334	ø 8.5	**FSC-09-8.5-OH**	1334 00108509
ø 0.354	ø 9.0	**FSC-16-9.0-OH**	1334 00109016
ø 0.367	ø 9.4	**FSC-16-9.4-OH**	1334 00109416
ø 0.374	ø 9.5	**FSC-16-9.5-OH**	1334 00109516
ø 0.381	ø 9.7	**FSC-16-9.7-OH**	1334 00109716
ø 0.393	ø 10.0	**FSC-16-10.0-OH**	1334 00110016
ø 0.413	ø 10.5	**FSC-16-10.5-OH**	1334 00110516
ø 0.429	ø 10.9	**FSC-16-10.9-OH**	1334 00110916
ø 0.433	ø 11.0	**FSC-16-11.0-OH**	1334 00111016
ø 0.437	ø 11.1	**FSC-16-11.1-OH**	1334 00111116
ø 0.472	ø 12.0	**FSC-16-12.0-OH**	1334 00112016
ø 0.480	ø 12.2	**FSC-16-12.2-OH**	1334 00112216
ø 0.492	ø 12.5	**FSC-16-12.5-OH**	1334 00112516
ø 0.511	ø 13.0	**FSC-16-13.0-OH**	1334 00113016
ø 0.542	ø 13.8	**FSC-16-13.8-OH**	1334 00113816
ø 0.551	ø 14.0	**FSC-16-14.0-OH**	1334 00114016
ø 0.562	ø 14.3	**FSC-16-14.3-OH**	1334 00114316
ø 0.590	ø 15.0	**FSC-22-15.0-OH**	1334 00115022
ø 0.629	ø 16.0	**FSC-22-16.0-OH**	1334 00116022
ø 0.652	ø 16.6	**FSC-22-16.6-OH**	1334 00116622
ø 0.669	ø 17.0	**FSC-22-17.0-OH**	1334 00117022
ø 0.697	ø 17.8	**FSC-22-17.8-OH**	1334 00117822
ø 0.700	ø 17.8	**FSC-22-17.8-OH**	1334 00117822
ø 0.708	ø 18.0	**FSC-22-18.0-OH**	1334 00118022
ø 0.748	ø 19.0	**FSC-22-19.0-OH**	1334 00119022
ø 0.800	ø 20.4	**FSC-22-20.4-OH**	1334 00120422
ø 0.787	ø 20.0	**FSC-22-20.0-OH**	1334 00120022
ø 0.826	ø 21.0	**FSC-22-21.0-OH**	1334 00121022
ø 0.866	ø 22.0	**FSC-22-22.0-OH**	1334 00122022
ø 0.905	ø 23.0	**FSC-22-23.0-OH**	1334 00123022

FSC-C

For Collet through

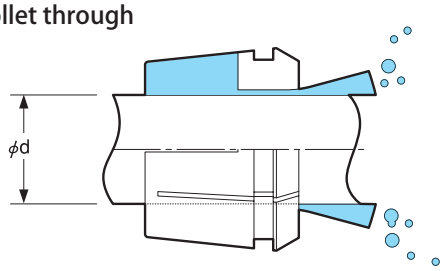

Tool Shank Dia.		Size	Code
ød (inch)	ød (mm)		
ø 0.141	ø 3.6	**FSC-09-3.6-C**	—
ø 0.168	ø 4.3	**FSC-09-4.3-C**	1335 00104309
ø 0.194	ø 5.0	**FSC-09-5.0-C**	1335 00105009
ø 0.220	ø 5.6	**FSC-09-5.6-C**	1335 00105609
ø 0.216	ø 5.5	**FSC-09-5.5-C**	1335 00105509
ø 0.236	ø 6.0	**FSC-09-6.0-C**	1335 00106009
ø 0.240	ø 6.1	**FSC-09-6.1-C**	1335 00106109
ø 0.244	ø 6.2	**FSC-09-6.2-C**	1335 00106209
ø 0.255	ø 6.5	**FSC-09-6.5-C**	1335 00106509
ø 0.275	ø 7.0	**FSC-09-7.0-C**	1335 00107009
ø 0.314	ø 8.0	**FSC-09-8.0-C**	1335 00108009
ø 0.313	ø 8.0	**FSC-09-8.0-C**	1335 00108009
ø 0.318	ø 8.1	**FSC-09-8.1-C**	1335 00108109
ø 0.323	ø 8.3	**FSC-09-8.3-C**	1335 00108309
ø 0.334	ø 8.5	**FSC-09-8.5-C**	1335 00108509
ø 0.354	ø 9.0	**FSC-16-9.0-C**	1335 00109016
ø 0.367	ø 9.4	**FSC-16-9.4-C**	1335 00109416
ø 0.374	ø 9.5	**FSC-16-9.5-C**	1335 00109516
ø 0.381	ø 9.7	**FSC-16-9.7-C**	1335 00109716
ø 0.393	ø 10.0	**FSC-16-10.0-C**	1335 00110016
ø 0.413	ø 10.5	**FSC-16-10.5-C**	1335 00110516
ø 0.429	ø 10.9	**FSC-16-10.9-C**	1335 00110916
ø 0.433	ø 11.0	**FSC-16-11.0-C**	1335 00111016
ø 0.437	ø 11.1	**FSC-16-11.1-C**	1335 00111116
ø 0.472	ø 12.0	**FSC-16-12.0-C**	1335 00112016
ø 0.480	ø 12.2	**FSC-16-12.2-C**	1335 00112216
ø 0.492	ø 12.5	**FSC-16-12.5-C**	1335 00112516
ø 0.511	ø 13.0	**FSC-16-13.0-C**	1335 00113016
ø 0.542	ø 13.8	**FSC-16-13.8-C**	1335 00113816
ø 0.551	ø 14.0	**FSC-16-14.0-C**	1335 00114016
ø 0.562	ø 14.3	**FSC-16-14.3-C**	1335 00114316
ø 0.590	ø 15.0	**FSC-22-15.0-C**	1335 00115022
ø 0.629	ø 16.0	**FSC-22-16.0-C**	1335 00116022
ø 0.652	ø 16.6	**FSC-22-16.6-C**	1335 00116622
ø 0.669	ø 17.0	**FSC-22-17.0-C**	1335 00117022
ø 0.697	ø 17.8	**FSC-22-17.8-C**	1335 00117822
ø 0.700	ø 17.8	**FSC-22-17.8-C**	1335 00117822
ø 0.708	ø 18.0	**FSC-22-18.0-C**	1335 00118022
ø 0.748	ø 19.0	**FSC-22-19.0-C**	1335 00119022
ø 0.800	ø 20.4	**FSC-22-20.4-C**	1335 00120422
ø 0.787	ø 20.0	**FSC-22-20.0-C**	1335 00120022
ø 0.826	ø 21.0	**FSC-22-21.0-C**	1335 00121022
ø 0.866	ø 22.0	**FSC-22-22.0-C**	1335 00122022
ø 0.905	ø 23.0	**FSC-22-23.0-C**	1335 00123022

OH type shall be selected in case not utilizing coolant through from the machine spindle.

Ordering Example

FSC - 16 - 9.0 - OH

16 Series — Tool Shank Dia.

Ordering Example

FSC - 16 - 9.0 - C

16 Series — Tool Shank Dia.

Inch to Metric (mm) → Inch × 25.4
Metric (mm) to Inch → Metric ÷ 25.4 or Metric × 0.03937

Special / Custom Sizes on request

STP

Synchro Tapping Chuck

● Quick-changeable tap adapter.

STP

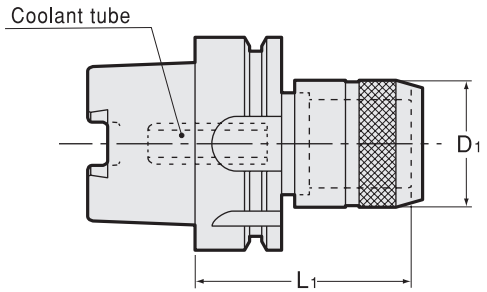

STC (Option)

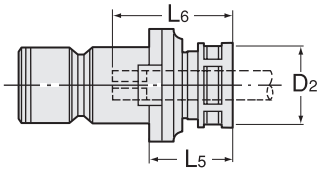

WE (Option)

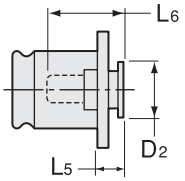

WEN・B (Option)

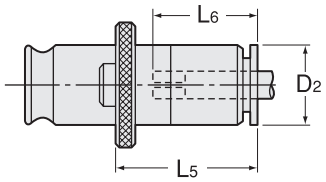

● Coolant tube is included.

⚠ For capable tap sizes, please refer to P. 463 chart.

Metric Sizes

Unit : Metric

Code	Model	L1	D1	kg	Tap adapter	L5	D2	Tap Size: Metric thread	Tap Size: OSG synchro tap	Tap Size: Pipe tap	Tap Size: ANSI
5520 13001080	**HSK40A -STP1 -80**	80	38	0.6	STC1- ※※※	26	26	M3 ～ M12	M3 ～ M10	PIPE(PT,PS,PF)1/8	#8-12, 1/4, 5/16, 7/16, 1/8SS
					WEN1B- ※※※	33	19				
5520 13001110	**-110**	110	38		WE1- ※※※	7	19				
5520 14001080	**HSK50A -STP1 -80**	80	38	0.8	STC1- ※※※	26	26	M3 ～ M12	M3 ～ M10	PIPE(PT,PS,PF)1/8	#8-12, 1/4, 5/16, 7/16, 1/8SS
					WEN1B- ※※※	33	19				
5520 14001110	**-110**	110	38	1.1	WE1- ※※※	7	19				
5520 14002100	**HSK50A -STP2 -100**	100	55	1.2	STC2 - ※※※	35	36	M8 ～ M20	M8 ～ M14	PIPE(PT,PS,PF)1/8 PIPE(PT,PS,PF)1/4 PIPE(PT,PS,PF)3/8	1/4-3/4, 1/8SS, 1/8LS, 1/4P
					WEN2B- ※※※	59	30				
5520 14002130	**-130**	130	55	1.5	WE2- ※※※	11	30				
5520 15001080	**HSK63A -STP1 -80**	80	38	1.0	STC1- ※※※	26	26	M3 ～ M12	M3 ～ M10	PIPE(PT,PS,PF)1/8	#8-12, 1/4, 5/16, 7/16, 1/8SS
					WEN1B- ※※※	33	19				
5520 15001110	**-110**	110	38	1.3	WE1- ※※※	7	19				
5520 15002100	**HSK63A -STP2 -100**	100	55		STC2 - ※※※	35	36	M8 ～ M20	M8 ～ M14	PIPE(PT,PS,PF)1/8 PIPE(PT,PS,PF)1/4 PIPE(PT,PS,PF)3/8	1/4-3/4, 1/8SS, 1/8LS, 1/4P
					WEN2B- ※※※	59	30				
5520 15002130	**-130**	130	55	2.0	WE2- ※※※	11	30				
5520 17001095	**HSK100A -STP1 -95**	95	38	2.5	STC1- ※※※	26	26	M3 ～ M12	M3 ～ M10	PIPE(PT,PS,PF)1/8	#8-12, 1/4, 5/16, 7/16, 1/8SS
					WEN1B- ※※※	33	19				
5520 17001125	**-125**	125	38		WE1- ※※※	7	19				
5520 17002115	**HSK100A -STP2 -115**	115	55	3.2	STC2 - ※※※	35	36	M8 ～ M20	M8 ～ M14	PIPE(PT,PS,PF)1/8 PIPE(PT,PS,PF)1/4 PIPE(PT,PS,PF)3/8	1/4-3/4, 1/8SS, 1/8LS, 1/4P
					WEN2B- ※※※	59	30				
5520 17002145	**-145**	145	55	3.7	WE2- ※※※	11	30				

L5 values are in the case of metric thread.

STC L6 Dimension

Please refer to P. 458, 460 for L6 dimension of WE, WEN・B.

STC1 L6	M3	M4	M5	M6	M8	M10	M11	M12	Pipe1/8
MIN	24	26	31	31	32	32	32	33	34
MAX	29	31	35	35	37	37	37	37	38

STC2 L6	M8	M10	M11	M12	M14	M16	M17	M18	M20	Pipe1/8	Pipe1/4	Pipe3/8
MIN	34	34	33	35	39	41	41	43	43	29	29	33
MAX	39	39	38	40	44	46	46	48	48	33	31	34

Inch to Metric (mm) → Inch × 25.4
Metric (mm) to Inch → Metric ÷ 25.4 or Metric × 0.03937

Special / Custom Sizes on request

Metric Sizes

Unit : Metric

Code	Model	Collet			Nut	Spanner
		Metric thread	Pipe tap	OSG synchro tap		
2800 00001 ※※※	**STC1-** ※※※	FDC-09		FDC-09	HDP-09B	S-1L
2800 00001 ※※※	**STC1-** ※※※		ESC10		KDP-1916	S-1L
2800 00002 ※※※	**STC2-** ※※※	FDC-16		FDC-16	HDP-16B	S-4L
2800 00002 ※※※	**STC2-** ※※※		ESC16		KDP-2825	S-4L

1.Tap size will be inserted in " ※※※ ".
2.STC adapter comes complete with collet and nut, but spanner is sold separately.
3.When using OSG synchro tap, please specify it.
Example : STC1-M3-O

STP Holder

Ordering Example

HSK40A - **STP1** - **80**
Shank size | Adapter size | L1

STC adapter

Ordering Example

STC1 - **M10** - **ANSI**
Size | Tap size | ANSI,ISO,DIN,JIS

WEN • B BILZ Tap Adapter

Ordering Example

WEN1B - **M10** - **ANSI**
Size | Tap size | ANSI,ISO,DIN,JIS

Inch to Metric (mm) → Inch × 25.4
Metric (mm) to Inch → Metric ÷ 25.4 or Metric × 0.03937

Special / Custom Sizes on request

TP1

Quick Change Tapping Chuck

● Strong compression allows use with rolled thread tap.

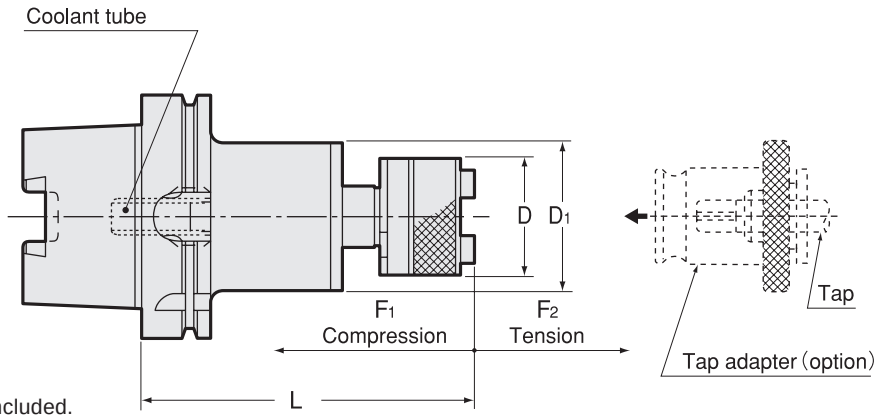

● Coolant tube is included.

⚠ For capable tap sizes, please refer to P. 463 chart.

Metric Sizes

Unit : Metric

Code	Model	Tap Size	Adapter size	L	D	D1	Axial compensation		kg
							F1	F2	
5460 13001113	**HSK40A -TP1 -1 -113**	M3 ~ M12,U1/4 ~ U7/16, PIPE (PT,PS,PF) 1/8	1	113	32	44	6	18	0.9
5460 14001113	**HSK50A -TP1 -1 -113**	M3 ~ M12,U1/4 ~ U7/16, PIPE (PT,PS,PF) 1/8	1	113	32	44	6	18	
5460 14002139	**-2 -139**	M8 ~ M22,U3/8 ~ U7/8, PIPE (PT,PS,PF) 1/8 ~ 3/8	2	139	50	46	10	15	
5460 15001113	**HSK63A -TP1 -1 -113**	M3 ~ M12,U1/4 ~ U7/16, PIPE (PT,PS,PF) 1/8	1	113	32	44	6	18	1.4
5460 15002139	**-2 -139**	M8 ~ M22,U3/8 ~ U7/8, PIPE (PT,PS,PF) 1/8 ~ 3/8	2	139	50	46	10	15	1.8
5460 17001113	**HSK100A -TP1 -1 -113**	M3 ~ M12,U1/4 ~ U7/16, PIPE (PT,PS,PF) 1/8	1	113	32	44	6	18	2.7
5460 17002139	**-2 -139**	M8 ~ M22,U3/8 ~ U7/8, PIPE (PT,PS,PF) 1/8 ~ 3/8	2	139	50	46	10	15	3.1
5460 17003211	**-3 -211**	M16 ~ M38,U3/4 ~ 1-3/8, PIPE (PT,PS,PF) 3/8 ~ 1-1/8	3	211	72	62	20	20	5.2

1.To prevent tap breakage, use tap adapter with safety torque device.
2.Tap adapter is sold separately.

Tap adapter

P. 458

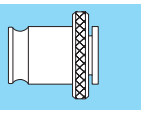

Ordering Example

HSK40A - TP1-2 - 139

Shank size | Adapter size | Projection length(L)

Inch to Metric (mm) → Inch × 25.4
Metric (mm) to Inch → Metric ÷ 25.4 or Metric × 0.03937

Special / Custom Sizes on request

SLH

Side Lock Holder

Type 1

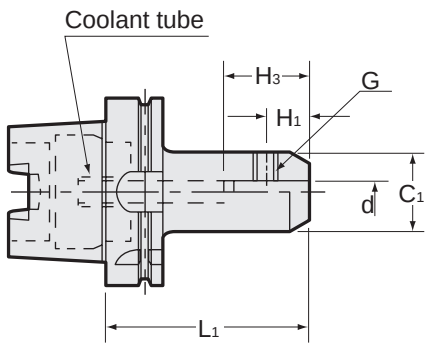

Type 2

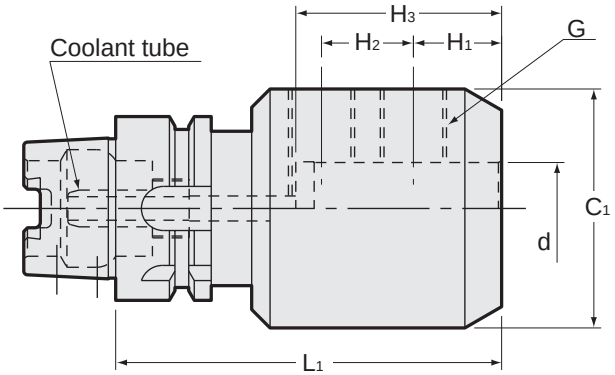

● Coolant tube is included.

Inch Sizes

Unit : Inch

Code	Model	Type	d H6 (mm)	C1	L1	H1	H2	H3	G	kg
-	HSK40A -SLH -0250 -60	1	0.250	0.790	2.362	0.437	-	1.420	1/4-28 × 1/4	
-	-105	1	0.250	0.790	4.134	0.437	-	1.420	1/4-28 × 1/4	
-	HSK40A -SLH -0313 -60	1	0.3125	0.870	2.362	0.437	-	1.420	5/16-24 × 1/4	
-	-105	1	0.3125	0.870	4.134	0.437	-	1.420	5/16-24 × 1/4	
-	HSK40A -SLH -0375 -60	1	0.375	1.000	2.362	0.710	-	1.560	3/8-24 × 5/16	
-	-105	1	0.375	1.000	4.134	0.710	-	1.560	3/8-24 × 5/16	
-	HSK40A -SLH -0438 -60	1	0.4375	1.380	2.362	0.710	-	1.770	7/16-20 × 3/8	
-	-105	1	0.4375	1.380	4.134	0.710	-	1.770	7/16-20 × 3/8	
-	HSK40A -SLH -0500 -75	1	0.500	1.380	2.953	0.710	-	1.770	7/16-20 × 3/8	
-	-105	1	0.500	1.380	4.134	0.710	-	1.770	7/16-20 × 3/8	
5420 13320075	HSK40A -SLH -0625 -75	2	0.625	1.650	2.953	0.700	-	1.890	9/16-18 × 1/2	0.6
-	-105	2	0.625	1.650	4.134	0.700	-	1.890	9/16-18 × 1/2	
5420 23224075	HSK40A -SLH -0750 -75	2	0.750	1.750	2.953	0.74	-	2.020	5/8-18 × 1/2	0.6
-	-135	2	0.750	1.750	5.315	0.74	-	2.020	5/8-18 × 1/2	
-	HSK40A -SLH -0875 -75	2	0.875	2.000	2.953	0.74	-	2.020	5/8-18 × 1/2	
-	-135	2	0.875	2.000	5.315	0.74	-	2.020	5/8-18 × 1/2	
-	HSK63A -SLH -0250 -60	1	0.250	0.790	2.362	0.437	-	1.420	1/4-28 × 1/4	
-	-105	1	0.250	0.790	4.134	0.437	-	1.420	1/4-28 × 1/4	
-	HSK63A -SLH -0313 -80	1	0.3125	0.870	3.150	0.437	-	1.420	5/16-24 × 1/4	
-	-150	1	0.3125	0.870	5.906	0.437	-	1.420	5/16-24 × 1/4	
-	HSK63A -SLH -0375 -90	1	0.375	1.000	3.543	0.710	-	1.560	3/8-24 × 5/16	
-	-150	1	0.375	1.000	5.906	0.710	-	1.560	3/8-24 × 5/16	
-	HSK63A -SLH -0438 -95	1	0.4375	1.380	3.740	0.710	-	1.770	7/16-20 × 3/8	
-	-150	1	0.4375	1.380	5.906	0.710	-	1.770	7/16-20 × 3/8	
-	HSK63A -SLH -0500 -95	1	0.500	1.380	3.740	0.710	-	1.770	7/16-20 × 3/8	
-	-150	1	0.500	1.380	5.906	0.710	-	1.770	7/16-20 × 3/8	
-	HSK63A -SLH -0625 -100	1	0.625	1.650	3.937	0.700	-	1.890	9/16-18 × 1/2	
-	-150	1	0.625	1.650	5.906	0.700	-	1.890	9/16-18 × 1/2	
-	HSK63A -SLH -0750 -100	1	0.750	1.750	3.937	0.740	-	2.020	5/8-18 × 1/2	
-	-150	1	0.750	1.750	5.906	0.740	-	2.020	5/8-18 × 1/2	
-	HSK63A -SLH -0875 -100	1	0.875	2.000	3.937	0.740	-	2.020	5/8-18 × 1/2	
-	-150	1	0.875	2.000	5.906	0.740	-	2.020	5/8-18 × 1/2	
5420 15332150	HSK63A -SLH -1000 -100	2	1.000	2.360	3.937	0.860	-	2.270	3/4-16 × 11/16	2.9
-	-150	2	1.000	2.360	5.906	0.860	-	2.270	3/4-16 × 11/16	
5420 15340100	HSK63A -SLH -1250 -100	2	1.250	2.650	3.937	0.860	-	2.270	3/4-16 × 11/16	2.9
-	-150	2	1.250	2.650	5.906	0.860	-	2.270	3/4-16 × 11/16	
5420 15348100	HSK63A -SLH -1500 -100	2	1.500	2.990	3.937	1.181	-	2.717	3/4-16 × 11/16	2.3
-	-150	2	1.500	2.990	5.906	1.181	-	2.717	3/4-16 × 11/16	

Item code with - is semi standard item.

Ordering Example

HSK40A - SLH - 0250 - 65

HSK40A: Shank size; 0250: I.D. (d); 65: Projection length (L)

Inch to Metric (mm) → Inch × 25.4
Metric (mm) to Inch → Metric ÷ 25.4 or Metric × 0.03937

Special / Custom Sizes on request

Inch Sizes

Unit : Inch

Code	Model	Type	d H6 (mm)	C1	L1	H1	H2	H3	G	kg
-	HSK100A -SLH -0250 -75	1	0.250	0.790	2.953	0.437	-	1.420	1/4-28 × 1/4	
-	-135	1	0.250	0.790	5.315	0.437	-	1.420	1/4-28 × 1/4	
-	HSK100A -SLH -0313 -75	1	0.3125	0.870	2.953	0.437	-	1.420	5/16-24 × 1/4	
-	-135	1	0.3125	0.870	5.315	0.437	-	1.420	5/16-24 × 1/4	
-	HSK100A -SLH -0375 -90	1	0.375	1.000	3.543	0.710	-	1.560	3/8-24 × 5/16	
-	-150	1	0.375	1.000	5.906	0.710	-	1.560	3/8-24 × 5/16	
-	HSK100A -SLH -0438 -100	1	0.4375	1.380	3.937	0.710	-	1.770	7/16-20 × 3/8	
-	-165	1	0.4375	1.380	6.496	0.710	-	1.770	7/16-20 × 3/8	
-	HSK100A -SLH -0500 -105	1	0.500	1.380	4.134	0.710	-	1.770	7/16-20 × 3/8	
-	-165	1	0.500	1.380	6.496	0.710	-	1.770	7/16-20 × 3/8	
-	HSK100A -SLH -0625 -110	1	0.625	1.650	4.331	0.700	-	1.890	9/16-18 × 1/2	
-	-165	1	0.625	1.650	6.496	0.700	-	1.890	9/16-18 × 1/2	
-	HSK100A -SLH -0750 -110	1	0.750	1.750	4.331	0.740	-	2.020	5/8-18 × 1/2	
-	-165	1	0.750	1.750	6.496	0.740	-	2.020	5/8-18 × 1/2	
-	HSK100A -SLH -0875 -110	1	0.875	2.000	4.331	0.740	-	2.020	5/8-18 × 1/2	
-	-165	1	0.875	2.000	6.496	0.740	-	2.020	5/8-18 × 1/2	
-	HSK100A -SLH -1000 -115	1	1.000	2.360	4.528	0.860	-	2.270	3/4-16 × 11/16	
-	-165	1	1.000	2.360	6.496	0.860	-	2.270	3/4-16 × 11/16	
-	HSK100A -SLH -1250 -120	1	1.250	2.650	4.724	0.860	-	2.270	3/4-16 × 11/16	
-	-165	1	1.250	2.650	6.496	0.860	-	2.270	3/4-16 × 11/16	
-	HSK100A -SLH -1500 -120	1	1.500	2.990	4.724	1.181	-	2.717	3/4-16 × 11/16	
-	-165	1	1.500	2.990	6.496	1.181	-	2.717	3/4-16 × 11/16	
5420 17364135	HSK100A -SLH -2000 -135	2	2.000	3.740	5.315	1.260	1.500	3.380	1-12 × 7/8	6.1
-	-180	2	2.000	3.740	7.087	1.260	1.500	3.380	1-12 × 7/8	
-	HSK100A -SLH -2500 -135	2	2.500	4.250	5.315	1.162	1.500	3.380	1-12 × 7/8	
-	-180	2	2.500	4.250	7.087	1.162	1.500	3.380	1-12 × 7/8	

Item code with - is semi standard item.

Ordering Example

HSK40A - SLH - 0250 - 65

Shank size | I.D. (d) | Projection length (L)

Inch to Metric (mm) → Inch × 25.4
Metric (mm) to Inch → Metric ÷ 25.4 or Metric × 0.03937

Special / Custom Sizes on request

SLA

Side Lock Holder

● For straight shank boring bar with flat and straight shank boring head with flat.



Type1

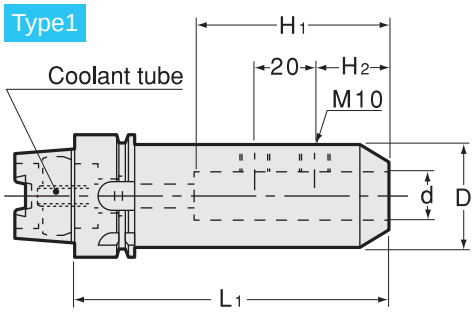

● Coolant tube is included.

Type2

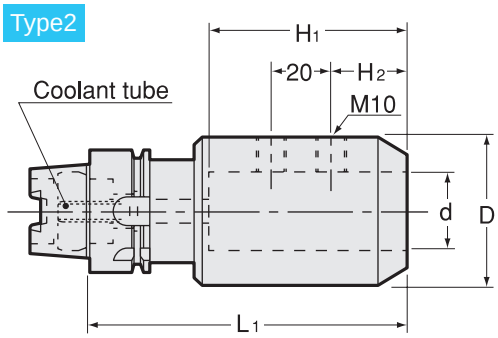

● Coolant tube is included.

Metric Sizes

Unit : Metric

Code	Model	Type	d	L1	D	H1	H2	kg
5420 13116090	**HSK40A -SLA16 -90**	2	16	90	40	65	25	
5420 13120090	**HSK40A -SLA20 -90**	2	20	90	40	65	25	
5420 13125105	**HSK40A -SLA25 -105**	2	25	105	46	65	25	0.9
5420 14116090	**HSK50A -SLA16 -90**	1	16	90	40	65	25	
5420 14120090	**HSK50A -SLA20 -90**	1	20	90	40	65	25	0.9
5420 14125105	**HSK50A -SLA25 -105**	2	25	105	46	65	25	1.1
5420 15120090	**HSK63A -SLA20 -90**	1	20	90	50	65	25	1.5
5420 15125105	**HSK63A -SLA25 -105**	1	25	105	50	65	25	1.6
5420 15132105	**HSK63A -SLA32 -105**	2	32	105	60	75	30	1.8
5420 17120105	**HSK100A -SLA20 -105**	1	20	105	50	65	25	3.0
5420 17125105	**HSK100A -SLA25 -105**	1	25	105	50	65	25	2.9
5420 17132120	**HSK100A -SLA32 -120**	1	32	120	60	75	30	3.6
5420 17142120	**HSK100A -SLA42 -120**	1	42	120	70	75	30	3.9

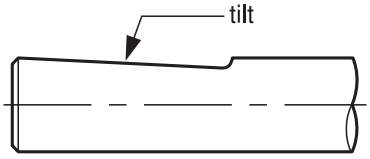

Please contact NT if the cutting tool has tilted flat on the shank.
Special tool holder that matches to the tilted flat can be manufactured.

Ordering Example

HSK40A - SLA - 20 - 90

- HSK40A: Shank size
- 20: I.D. (d)
- 90: Projection length (L)

SL2

Side Lock Holder

● For JIS straight shank endmill with flat.



Type1

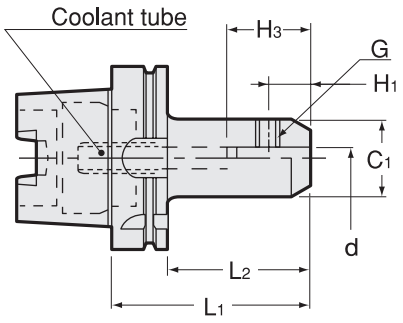

Type2

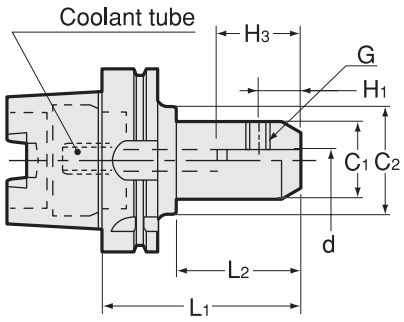

Type3

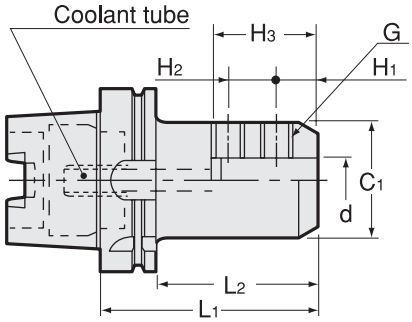

Type4

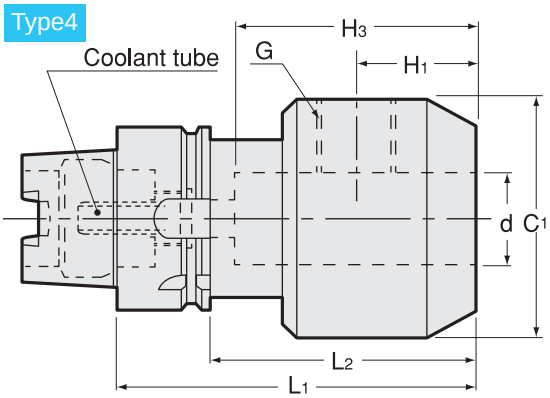

● Coolant tube is included.

Metric Sizes

Unit : Metric

Code	Model	Type	d	L1	L2	C1	C2	H1	H2	H3	G	kg
5420 13206060	HSK40A -SL2 -6 -60	1	6	60	40	25	—	18	—	36	M6	
5420 13208060	-8 -60	1	8	60	40	28	—	18	—	36	M8	
5420 13210060	-10 -60	4	10	60	40	35	—	20	—	40	M10	0.5
5420 13212075	-12 -75	4	12	75	55	42	—	22.5	—	45	M12	
5420 13216075	-16 -75	4	16	75	55	42	—	24	—	48	M14	
5420 13220075	-20 -75	4	20	75	55	42	—	25	—	50	M16	0.6
5420 14206060	HSK50A -SL2 -6 -60	1	6	60	34	25	—	18	—	36	M6	
5420 14208060	-8 -60	1	8	60	34	28	—	18	—	36	M8	
5420 14210065	-10 -65	1	10	65	39	35	—	20	—	40	M10	0.7
5420 14212075	-12 -75	1	12	75	49	42	—	22.5	—	45	M12	0.9
5420 14216075	-16 -75	1	16	75	49	42	—	24	—	48	M14	0.9
5420 14220090	-20 -90	1	20	90	64	42	—	25	—	50	M16	1.0
5420 15208080	HSK63A -SL2 -8 -80	1	8	80	54	28	—	18	—	36	M8	0.9
5420 15208150	-150	1	8	150	124	28	—	18	—	36	M8	
5420 15210090	-10 -90	1	10	90	64	35	—	20	—	40	M10	1.1
5420 15210150	-150	1	10	150	124	35	—	20	—	40	M10	1.6
5420 15212095	-12 -95	1	12	95	69	42	—	22.5	—	45	M12	1.4
5420 15212150	-150	1	12	150	124	42	—	22.5	—	45	M12	1.9
5420 15216100	-16 -100	1	16	100	74	48	—	24	—	48	M14	1.6
5420 15216150	-150	1	16	150	124	48	—	24	—	48	M14	2.3
5420 15220100	-20 -100	1	20	100	74	52	—	25	—	50	M16	1.8
5420 15220150	-150	1	20	150	124	52	—	25	—	50	M16	2.5

Inch to Metric (mm) → Inch × 25.4
Metric (mm) to Inch → Metric ÷ 25.4 or Metric × 0.03937

Special / Custom Sizes on request

Metric Sizes

Unit : Metric

Code	Model	Type	d	L1	L2	C1	C2	H1	H2	H3	G	kg
5420 17208090	**HSK100A -SL2 -8 -90**	2	8	90	49	28	50	18	—	36	M8	
5420 17208165	**-165**	2	8	165	124	28	50	18	—	36	M8	2.8
5420 17210100	**-10 -100**	2	10	100	59	35	50	20	—	40	M10	2.6
5420 17210165	**-165**	2	10	165	124	35	50	20	—	40	M10	
5420 17212105	**-12 -105**	1	12	105	76	42	—	22.5	—	45	M12	2.8
5420 17212165	**-165**	1	12	165	136	42	—	22.5	—	45	M12	3.4
5420 17216110	**-16 -110**	1	16	110	81	48	—	24	—	48	M14	3.1
5420 17216165	**-165**	1	16	165	136	48	—	24	—	48	M14	3.8
5420 17220110	**-20 -110**	1	20	110	81	52	—	25	—	50	M16	3.2
5420 17220165	**-165**	1	20	165	136	52	—	25	—	50	M16	
5420 17225115	**-25 -115**	3	25	115	86	65	—	24	25	56	M18	4.0
5420 17225165	**-165**	3	25	165	136	65	—	24	25	56	M18	
5420 17232120	**-32 -120**	3	32	120	91	72	—	24	28	60	M20	4.5
5420 17232165	**-165**	3	32	165	136	72	—	24	28	60	M20	

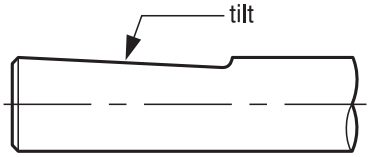

Please contact NT if the cutting tool has tilted flat on the shank.
Special tool holder that matches to the tilted flat can be manufactured.

Ordering Example

HSK63A - SL2 - 8 - 90

- HSK63A: Shank size
- 8: I.D. (d)
- 90: Projection length (L)

Inch to Metric (mm) → Inch × 25.4
Metric (mm) to Inch → Metric ÷ 25.4 or Metric × 0.03937

Special / Custom Sizes on request

FMH

Face Mill Arbor (For Cutters With Oil Hole)

● Coolant flows from the end face of centering location to cutter with oil hole.

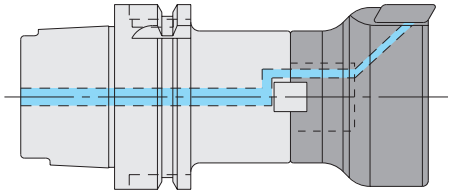

Type1

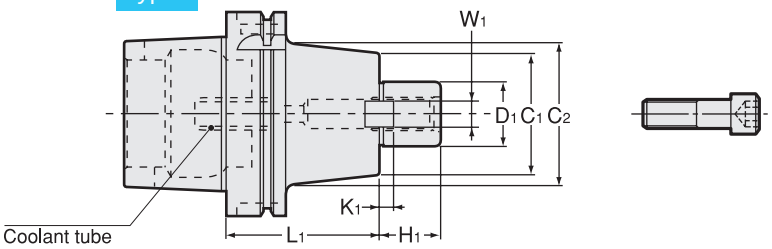

Type2

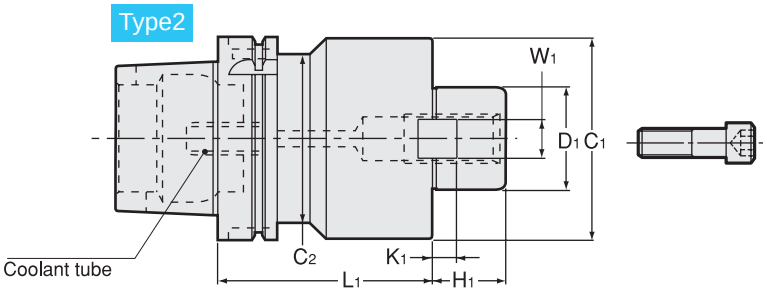

Type3

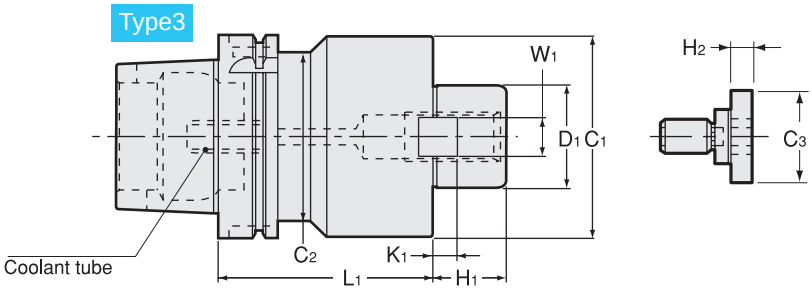

● Coolant tube is included.

Metric Sizes

Unit : Metric

Code	Model	Type	D1	L1	H1	C1	C2	W1	K1	C3	H2	Clamp Bolt	Cutter dia. Example
5340 13516060	**HSK40A -FMH16 -60**	1	16	60	17	34	34	8	5	—	—	M8	40 50
5340 13522060	**HSK40A -FMH22 -60**	2	22	60	18	45	34	10	5.6	—	—	M10	50 63
5340 13525060	**HSK40A -FMH25.4 -60**	2	25.4	60	22	70	34	9.5	5	—	—	M12	80 100 125
5340 14516060	**HSK50A -FMH16 -60**	1	16	60	17	34	34	8	5	—	—	M8	40 50
5340 14522060	**HSK50A -FMH22 -60**	2	22	60	18	45	42	10	5.6	—	—	M10	50 63
5340 14525060	**HSK50A -FMH25.4 -60**	2	25.4	60	22	70	42	9.5	5	—	—	M12	80 100 125
5340 15516060	**HSK63A -FMH16 -60**	1	16	60	17	34	34	8	5	—	—	M8	40 50
5340 15516090	**-90**	1	16	90	17	34	40	8	5	—	—		
5340 15516120	**-120**	1	16	120	17	34	40	8	5	—	—		
5340 15522060	**HSK63A -FMH22 -60**	1	22	60	18	45	45	10	5.6	—	—	M10	50 63
5340 15522090	**-90**	1	22	90	18	45	45	10	5.6	—	—		
5340 15522120	**-120**	1	22	120	18	45	45	10	5.6	—	—		
5340 15525060	**HSK63A -FMH25.4 -60**	2	25.4	60	22	70	53	9.5	5	—	—	M12	80 100 125
5340 15525090	**-90**	2	25.4	90	22	70	53	9.5	5	—	—		
5340 15525120	**-120**	2	25.4	120	22	70	53	9.5	5	—	—		
5340 15531060	**HSK63A -FMH31.75 -60**	2	31.75	60	30	80	53	12.7	7	—	—	M16	80 100
5340 15531090	**-90**	2	31.75	90	30	80	53	12.7	7	—	—		
5340 15531120	**-120**	2	31.75	120	30	80	53	12.7	7	—	—		
5340 15538060	**HSK63A -FMH38.1 -60**	3	38.1	60	34	90	53	15.9	9	50	14	MBAH-M20	125
5340 15538090	**-90**	3	38.1	90	34	90	53	15.9	9	50	14		
5340 15538120	**-120**	3	38.1	120	34	90	53	15.9	9	50	14		

Inch to Metric (mm) → Inch × 25.4
Metric (mm) to Inch → Metric ÷ 25.4 or Metric × 0.03937

Special / Custom Sizes on request

Metric Sizes

Unit : Metric

Code	Model	Type	D1	L1	H1	C1	C2	W1	K1	C3	H2	Clamp Bolt	Cutter dia. Example
5340 17516075	**HSK100A -FMH16 -75**	1	16	75	17	34	40	8	5	—	—	M8	40 50
5340 17516105	**-105**	1	16	105	17	34	40	8	5	—	—		
5340 17516135	**-135**	1	16	135	17	34	40	8	5	—	—		
5340 17522075	**HSK100A -FMH22 -75**	1	22	75	18	45	45	10	5.6	—	—	M10	50 63
5340 17522105	**-105**	1	22	105	18	45	45	10	5.6	—	—		
5340 17522135	**-135**	1	22	135	18	45	45	10	5.6	—	—		
5340 17525075	**HSK100A -FMH25.4 -75**	1	25.4	75	22	70	80	9.5	5	—	—	M12	80 100 125
5340 17525105	**-105**	1	25.4	105	22	70	80	9.5	5	—	—		
5340 17525135	**-135**	1	25.4	135	22	70	80	9.5	5	—	—		
5340 17531075	**HSK100A -FMH31.75 -75**	1	31.75	75	30	80	80	12.7	7	—	—	M16	80 100
5340 17531105	**-105**	1	31.75	105	30	80	80	12.7	7	—	—		
5340 17531135	**-135**	1	31.75	135	30	80	80	12.7	7	—	—		
5340 17538075	**HSK100A -FMH38.1 -75**	3	38.1	75	34	90	85	15.9	9	50	14	MBAH-M20	125
5340 17538105	**-105**	3	38.1	105	34	90	85	15.9	9	50	14		
5340 17538135	**-135**	3	38.1	135	34	90	85	15.9	9	50	14		
5340 17550075	**HSK100A -FMH50.8 -75**	3	50.8	75	36	100	85	19.05	10	65	14	MBAH-M24	160
5340 17550105	**-105**	3	50.8	105	36	100	85	19.05	10	65	14		
5340 17550135	**-135**	3	50.8	135	36	100	85	19.05	10	65	14		

Clamp bolt is Included.

Ordering Example

HSK63A - FMH 25.4 - 60

- HSK63A: Shank size
- 25.4: D1
- 60: Projection length (L)

Inch to Metric (mm) → Inch × 25.4
Metric (mm) to Inch → Metric ÷ 25.4 or Metric × 0.03937

Special / Custom Sizes on request

FMA

Face Mill Arbor

● For JIS B4113 face mill.

Type1

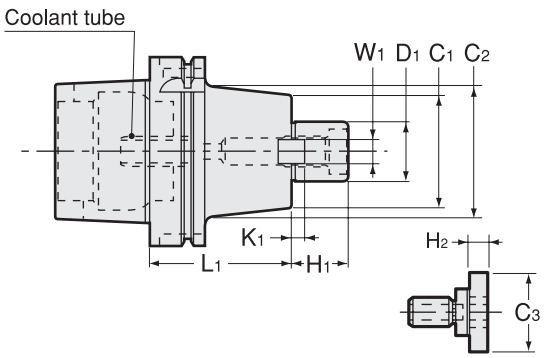

Type2

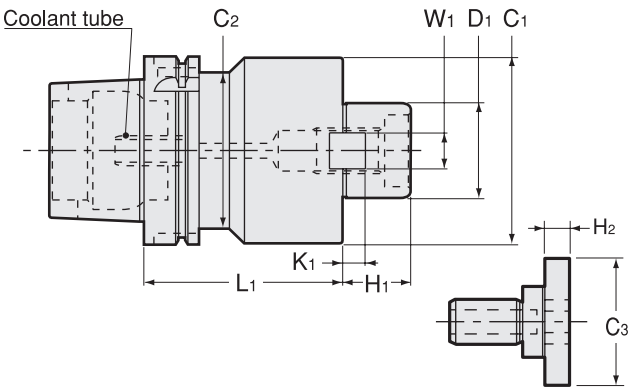

● Coolant tube is included.

Metric Sizes

Unit : Metric

Code	Model	Type	D1	L1	H1	C1	C2	W1	K1	C3	H2	kg	Clamp Bolt	Cutter dia. Example
5340 13025060	HSK40A -FMA25.4 -60	2	25.4	60	22	50	34	9.5	5	33	10	0.7	MBA-M12	80
5340 14025060	HSK50A -FMA25.4 -60	2	25.4	60	22	50	42	9.5	5	33	10	0.9	MBA-M12	80
5340 15025060	HSK63A -FMA25.4 -60	1	25.4	60	22	50	50	9.5	5	33	10	1.3	MBA-M12	80
5340 15025090	-90	1	25.4	90	22	50	50	9.5	5	33	10	1.9		
5340 15025120	-120	1	25.4	120	22	50	50	9.5	5	33	10	2.3		
5340 15031060	HSK63A -FMA31.75 -60	2	31.75	60	30	60	53	12.7	7	40	10	1.7	MBA-M16	100
5340 15031090	-90	2	31.75	90	30	60	53	12.7	7	40	10	2.5		
5340 15031120	-120	2	31.75	120	30	60	53	12.7	7	40	10	3.3		
5340 15038060	HSK63A -FMA38.1 -60	2	38.1	60	34	80	48	15.9	9	50	14	2.1	MBA-M20	125
5340 15038090	-90	2	38.1	90	34	80	53	15.9	9	50	14	3.0		
5340 15038120	-120	2	38.1	120	34	80	53	15.9	9	50	14	4.4		
5340 17025075	HSK100A -FMA25.4 -75	1	25.4	75	22	50	70	9.5	5	33	10	3.2	MBA-M12	80
5340 17025105	-105	1	25.4	105	22	50	70	9.5	5	33	10	3.9		
5340 17025135	-135	1	25.4	135	22	50	70	9.5	5	33	10	4.6		
5340 17031075	HSK100A -FMA31.75 -75	1	31.75	75	30	60	70	12.7	7	40	10	3.5	MBA-M16	100
5340 17031105	-105	1	31.75	105	30	60	70	12.7	7	40	10	4.3		
5340 17031135	-135	1	31.75	135	30	60	70	12.7	7	40	10	5.1		
5340 17038075	HSK100A -FMA38.1 -75	1	38.1	75	34	80	80	15.9	9	50	14	4.4	MBA-M20	125
5340 17038105	-105	1	38.1	105	34	80	80	15.9	9	50	14	5.7		
5340 17038135	-135	1	38.1	135	34	80	80	15.9	9	50	14	7.0		
5340 17050075	HSK100A -FMA50.8 -75	2	50.8	75	36	99	83	19.05	10	65	14	5.7	MBA-M24	150
5340 17050105	-105	2	50.8	105	36	99	83	19.05	10	65	14	7.7		
5340 17050135	-135	2	50.8	135	36	99	83	19.05	10	65	14	9.7		

Clamp bolt is Included.

Ordering Example

HSK63A - FMA 25.4 - 60

- HSK63A: Shank size
- 25.4: D1
- 60: Projection length (L)

Inch to Metric (mm) → Inch × 25.4
Metric (mm) to Inch → Metric ÷ 25.4 or Metric × 0.03937

Special / Custom Sizes on request

FMB

Face Mill Arbor

● For SANDVIK T-MAX face mill and shoulder cutter.

Type1

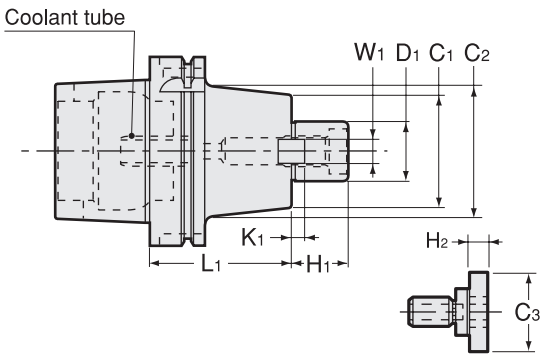

Type2

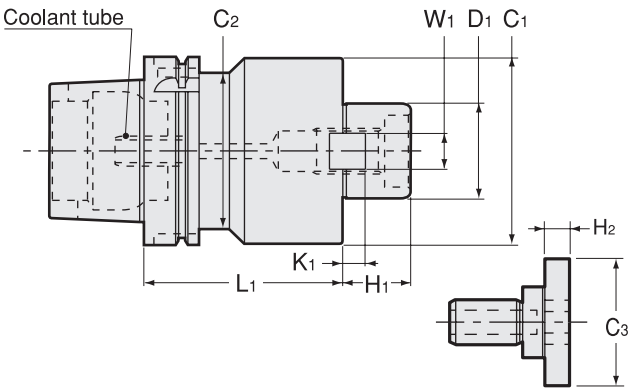

● Coolant tube is included.

Metric Sizes

Unit : Metric

Code	Model	Type	D1	L1	H1	C1	C2	W1	K1	C3	H2	Clamp Bolt	Cutter dia. example
5340 13125060	**HSK40A -FMB25.4 -60**	2	25.4	60	26	80	34	9.5	5	33	10	MBA-M12	80
5340 13127060	**HSK40A -FMB27 -60**	2	27	60	26	80	34	12	6	33	10	MBA-M12	80
5340 14125060	**HSK50A -FMB25.4 -60**	2	25.4	60	26	80	42	9.5	5	33	10	MBA-M12	80
5340 14127060	**HSK50A -FMB27 -60**	2	27	60	26	80	42	12	6	33	10	MBA-M12	80
5340 25025060	**HSK63A -FMB25.4 -60**	2	25.4	60	26	80	53	9.5	5	33	10	MBA-M12	80
5340 25027060	**HSK63A -FMB27 -60**	2	27	60	26	80	53	12	6	33	10	MBA-M12	80
5340 25038060	**HSK63A -FMB38.1 -60**	2	38.1	60	26	85	48	15.9	9	50	14	MBA-M20	100 125
5340 27025090	**HSK100A -FMB25.4 -90**	1	25.4	90	26	80	80	9.5	5	33	10	MBA-M12	80
5340 27027090	**HSK100A -FMB27 -90**	1	27	90	26	80	80	12	6	33	10	MBA-M12	80
5340 27038105	**HSK100A -FMB38.1 -105**	1	38.1	105	26	85	85	15.9	9	50	14	MBA-M20	100 125

Clamp bolt is Included.

Ordering Example

HSK63A - FMB 25.4 - 60

- HSK63A: Shank size
- 25.4: D1
- 60: Projection length (L)

Inch to Metric (mm) → Inch × 25.4
Metric (mm) to Inch → Metric ÷ 25.4 or Metric × 0.03937

Special / Custom Sizes on request

FMC

Face Mill Arbor

● For SANDVIK T-MAX shoulder face mill.

Type1

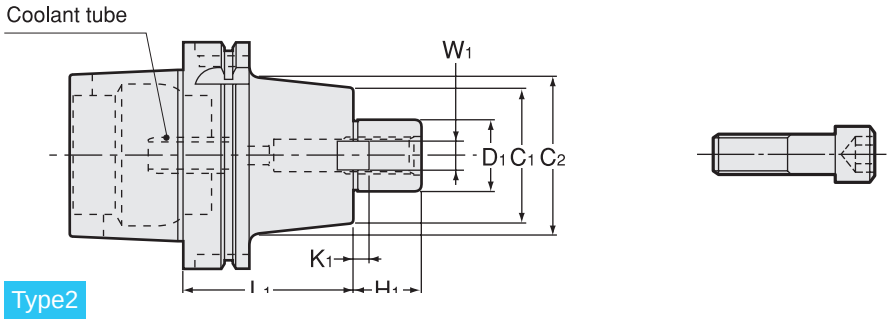

Type2

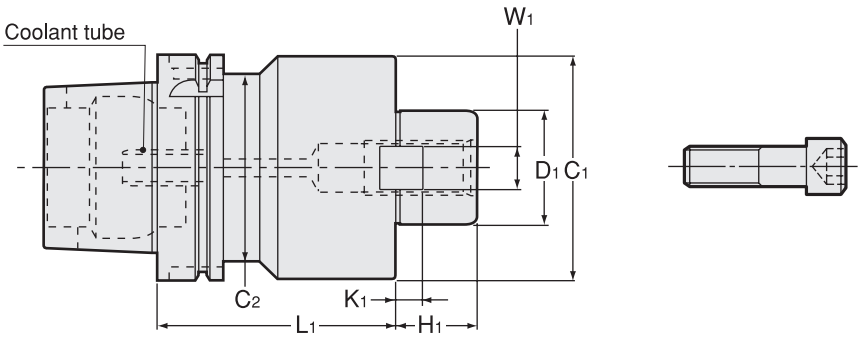

● Coolant tube is included.

Metric Sizes

Unit : Metric

Code	Model	Type	D1	L1	H1	C1	C2	W1	K1	kg	Clamp Bolt (JIS B1176)	Cutter dia. example
5340 13222045	**HSK40A -FMC22 -45**	2	22	45	18	45	31	10	5		M10	50 63
5340 13225060	**HSK40A -FMC25.4 -60**	2	25.4	60	20	70	34	9.5	5		M12	80
5340 14222060	**HSK50A -FMC22 -60**	2	22	60	18	45	42	10	5		M10	50 63
5340 14225060	**HSK50A -FMC25.4 -60**	2	25.4	60	20	70	42	9.5	5		M12	80
5340 35022060	**HSK63A -FMC22 -60**	1	22	60	18	45	45	10	5	1.1	M10	50 63
5340 35025060	**HSK63A -FMC25.4 -60**	2	25.4	60	20	70	53	9.5	5		M12	80
5340 35027060	**HSK63A -FMC27 -60**	2	27	60	20	70	53	12	6	1.6	M12	80
5340 35038060	**HSK63A -FMC38.1 -60**	2	38.1	60	22	85	48	15.9	7		M16	100
5340 37022090	**HSK100A -FMC22 -90**	1	22	90	18	45	85	10	5	3.7	M10	50 63
5340 37025090	**HSK100A -FMC25.4 -90**	1	25.4	90	20	70	85	9.5	5		M12	80
5340 37027090	**HSK100A -FMC27 -90**	1	27	90	20	70	85	12	6		M12	80
5340 37038105	**HSK100A -FMC38.1 -105**	1	38.1	105	22	85	85	15.9	7		M16	100

Clamp bolt is Included.

Ordering Example

HSK63A - FMC 25.4 - 60

HSK63A: Shank size; 25.4: D1; 60: Projection length (L)

Inch to Metric (mm) → Inch × 25.4
Metric (mm) to Inch → Metric ÷ 25.4 or Metric × 0.03937

Special / Custom Sizes on request

SCA

Side Cutter Arbor

● For JIS side cutter and metal saw.

Type1

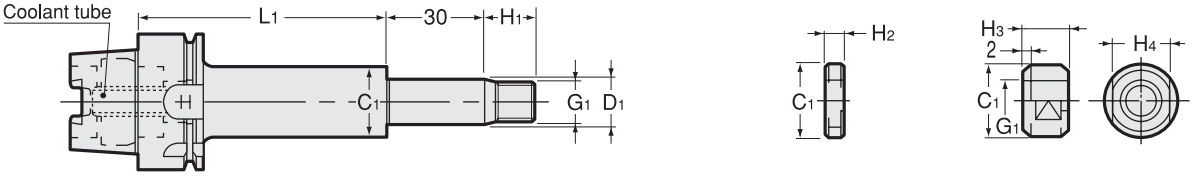

Type2

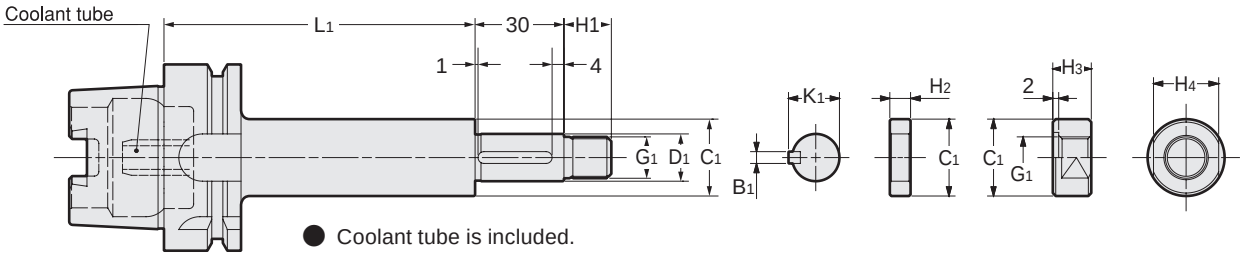

● Coolant tube is included.

Metric Sizes

Unit : Metric

Code	Model	Type	D1 (h6)	L1	C1	G1	H1	B1	K1	H2	H3	H4	kg	Cutting dia. Example
5540 13013075	HSK40A -SCA13 -75	1	13	75	20	M12 × 1.25	15	—	—	3,5,7,8,10,12	12	17		50
5540 13016075	HSK40A -SCA16 -75	2	16	75	26	M14 × 1.5	16	4	17.2	3,5,7,8,10,12	13	22		50 ~ 63
5540 13022075	HSK40A -SCA22 -75	2	22	75	34	M20 × 1.5	21	6	23.6	3,5,7,8,10,12	18	30		60 ~ 125
5540 13112075	HSK40A -SCA12.7 -75	1	12.7	75	20	M12 × 1.25	15	—	—	3,5,7,8,10,12	12	17		50
5540 13115075	HSK40A -SCA15.875 -75	2	15.875	75	26	M14 × 1.5	16	3.18	17.42	3,5,7,8,10,12	13	22		50 ~ 63
5540 13122075	HSK40A -SCA22.225 -75	2	22.225	75	34	M20 × 1.5	21	3.18	23.82	3,5,7,8,10,12	18	30		60 ~ 125
5540 14013075	HSK50A -SCA13 -75	1	13	75	20	M12 × 1.25	15	—	—	3,5,7,8,10,12	12	17		50
5540 14016075	HSK50A -SCA16 -75	2	16	75	26	M14 × 1.5	16	4	17.2	3,5,7,8,10,12	13	22		50 ~ 63
5540 14022075	HSK50A -SCA22 -75	2	22	75	34	M20 × 1.5	21	6	23.6	3,5,7,8,10,12	18	30	1.2	60 ~ 125
5540 14112075	HSK50A -SCA12.7 -75	1	12.7	75	20	M12 × 1.25	15	—	—	3,5,7,8,10,12	12	17		50
5540 14115075	HSK50A -SCA15.875 -75	2	15.875	75	26	M14 × 1.5	16	3.18	17.42	3,5,7,8,10,12	13	22		50 ~ 63
5540 14122075	HSK50A -SCA22.225 -75	2	22.225	75	34	M20 × 1.5	21	3.18	23.82	3,5,7,8,10,12	18	30		60 ~ 125
5540 15013060	HSK63A -SCA13 -60	1	13	60	20	M12 × 1.25	15	—	—	3,5,7,8,10,12	12	17	1.0	50
5540 15013090	-90	1	13	90	20	M12 × 1.25	15	—	—	3,5,7,8,10,12	12	17	1.0	50
5540 15016075	HSK63A -SCA16 -75	2	16	75	26	M14 × 1.5	16	4	17.2	3,5,7,8,10,12	13	22	1.4	50 ~ 63
5540 15016105	-105	2	16	105	26	M14 × 1.5	16	4	17.2	3,5,7,8,10,12	13	22	1.5	50 ~ 63
5540 15022075	HSK63A -SCA22 -75	2	22	75	34	M20 × 1.5	21	6	23.6	3,5,7,8,10,12	18	30	1.8	60 ~ 125
5540 15022120	-120	2	22	120	34	M20 × 1.5	21	6	23.6	3,5,7,8,10,12	18	30	1.8	60 ~ 125
5540 15027075	HSK63A -SCA27 -75	2	27	75	40	M24 × 2	25	7	29	3,5,7,8,10,12	21	32	2.0	75 ~ 100
5540 15027120	-120	2	27	120	40	M24 × 2	25	7	29	3,5,7,8,10,12	21	32	2.4	75 ~ 100
5540 15032090	HSK63A -SCA32 -90	2	32	90	46	M30 × 2	30	8	34	3,5,7,8,10,12	26	41	2.4	100 ~ 250
5540 17013075	HSK100A-SCA13 -75	1	13	75	20	M12 × 1.25	15	—	—	3,5,7,8,10,12	12	17	4.3	50
5540 17013105	-105	1	13	105	20	M12 × 1.25	15	—	—	3,5,7,8,10,12	12	17	4.4	50
5540 17016090	HSK100A-SCA16 -90	2	16	90	26	M14 × 1.5	16	4	17.2	3,5,7,8,10,12	13	22	4.2	50 ~ 63
5540 17016120	-120	2	16	120	26	M14 × 1.5	16	4	17.2	3,5,7,8,10,12	13	22	4.4	50 ~ 63
5540 17022090	HSK100A-SCA22 -90	2	22	90	34	M20 × 1.5	21	6	23.6	3,5,7,8,10,12	18	30	4.4	60 ~ 125
5540 17022135	-135	2	22	135	34	M20 × 1.5	21	6	23.6	3,5,7,8,10,12	18	30	4.7	60 ~ 125
5540 17027090	HSK100A-SCA27 -90	2	27	90	40	M24 × 2	25	7	29	3,5,7,8,10,12	21	32	4.5	75 ~ 100
5540 17027135	-135	2	27	135	40	M24 × 2	25	7	29	3,5,7,8,10,12	21	32	4.9	75 ~ 100
5540 17032090	HSK100A-SCA32 -90	2	32	90	46	M30 × 2	30	8	34	3,5,7,8,10,12	26	41	4.7	100 ~ 250
5540 17032135	-135	2	32	135	46	M30 × 2	30	8	34	3,5,7,8,10,12	26	41	5.2	100 ~ 250
5540 17040090	HSK100A-SCA40 -90	2	40	90	55	M36 × 3	36	10	42.5	3,5,7,8,10,12	31	46	4.9	150 ~ 315
5540 17040135	-135	2	40	135	55	M36 × 3	36	10	42.5	3,5,7,8,10,12	31	46	5.9	150 ~ 315

One clamp nut and spacers (size 3, 5, 7, 8, 10, and 12 / one each) are included.

Ordering Example

HSK40A - SCA 13 - 75

Shank size | D1 | Projection length (L)

Inch to Metric (mm) → Inch × 25.4
Metric (mm) to Inch → Metric ÷ 25.4 or Metric × 0.03937

Special / Custom Sizes on request

MTA

Morse Taper Holder

● For Morse taper shank with tang.

Type1

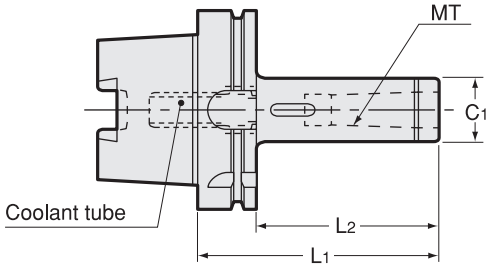

Type2

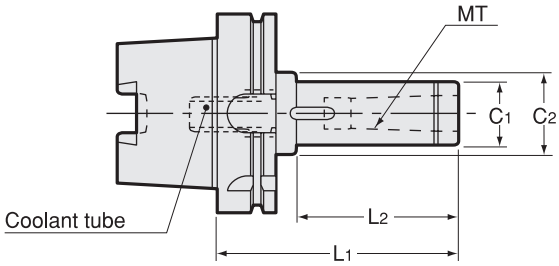

Type3

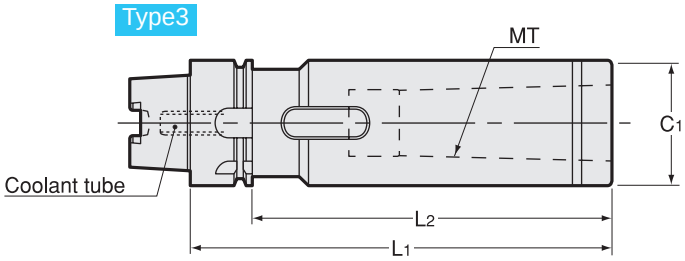

● Coolant tube is included.

Metric Sizes

Unit : Metric

Code	Model	Type	MT	L1	C1	L2	C2	kg
5400 13001090	**HSK40A -MTA1 -90**	1	1	90	25	70	—	
5400 13002105	**HSK40A -MTA2 -105**	1	2	105	32	85	—	
5400 13003135	**HSK40A -MTA3 -135**	3	3	135	40	115	—	0.98
5400 14001095	**HSK50A -MTA1 -95**	1	1	95	25	69	—	
5400 14002110	**HSK50A -MTA2 -110**	1	2	110	32	84	—	
5400 14003135	**HSK50A -MTA3 -135**	1	3	135	40	109	—	
5400 15001105	**HSK63A -MTA1 -105**	1	1	105	25	79	—	
5400 15002120	**HSK63A -MTA2 -120**	1	2	120	32	94	—	
5400 15003150	**HSK63A -MTA3 -150**	1	3	150	40	124	—	
5400 15004165	**HSK63A -MTA4 -165**	1	4	165	50	139	—	
5400 17001105	**HSK100A -MTA1 -105**	2	1	105	25	66	32	2.3
5400 17002120	**HSK100A -MTA2 -120**	1	2	120	32	91	—	
5400 17003135	**HSK100A -MTA3 -135**	1	3	135	40	106	—	
5400 17004165	**HSK100A -MTA4 -165**	1	4	165	50	136	—	
5400 17005195	**HSK100A -MTA5 -195**	1	5	195	65	166	—	

Ordering Example

HSK63A - **MTA1** - **105**

Shank size | MT | Projection length (L)

Inch to Metric (mm) → Inch × 25.4
Metric (mm) to Inch → Metric ÷ 25.4 or Metric × 0.03937

Special / Custom Sizes on request

MS

Master Arbor

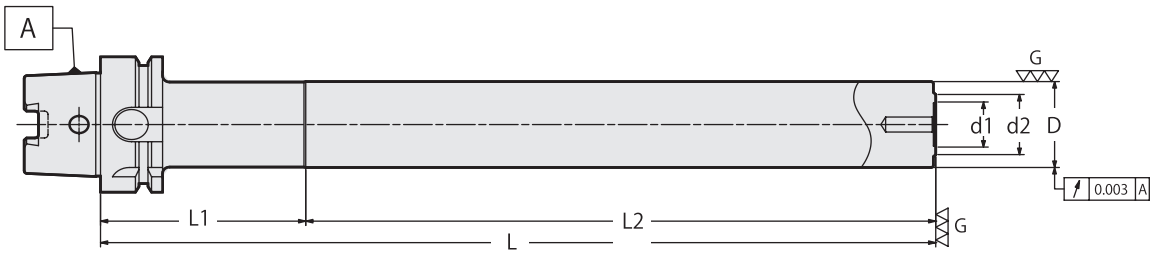

Metric Sizes

Unit : Metric

Code	Model			L	L1	L2	D	d1	d2	kg
5560 12240180	**HSK32A**	**-MS24**	**-180**	180	50	130	24	11	18	
5560 13240180	**HSK40A**	**-MS24**	**-180**	180	50	130	24	11	18	
5560 14320250	**HSK50A**	**-MS32**	**-250**	250	56	194	32	16	23	
5560 15400350	**HSK63A**	**-MS40**	**-350**	350	86	264	40	21	28	3.8
5560 17400350	**HSK100A**	**-MS40**	**-350**	350	89	261	40	21	28	5.1

Ordering Example

HSK63A - MS40 - 350

Shank size — O.D. (D) — Projection length (L)

Inch to Metric (mm) → Inch × 25.4
Metric (mm) to Inch → Metric ÷ 25.4 or Metric × 0.03937

Special / Custom Sizes on request

MEMO

KLD

Keyless Drill Chuck

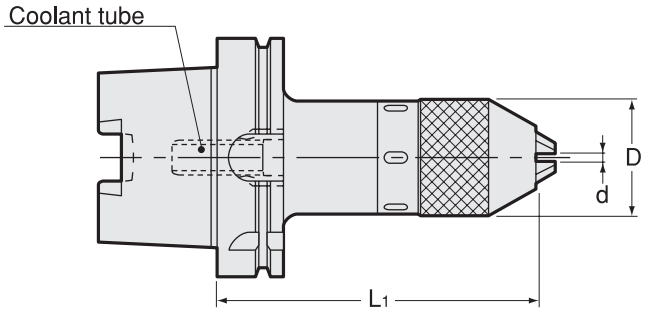

● Coolant tube is included.

Metric Sizes

Unit : Metric

Code	Model	d	L1	D	kg	Spanner
5440 13060105	**HSK40A -KLD6.5 -105**	0.5 ~ 6.5	105	34	0.66	FC6.5LC
5440 14130135	**HSK50A -KLD13 -135**	0.5 ~ 13	135	50	1.7	FC13LC
5440 15130135	**HSK63A -KLD13 -135**	0.5 ~ 13	135	50	2.0	FC13LC
5440 17130135	**HSK100A -KLD13 -135**	0.5 ~ 13	135	50	3.4	FC13LC

Spanner (option)

Code	Model
2685 00000065	**FC6.5LC**
2685 00000130	**FC13LC**

Ordering Example

HSK40A - KLD13 - 135

- HSK40A: Shank size
- KLD13: Max. chucking dia.
- 135: Projection length (L)

AHE

90°

Angle Heads (ER Collet Type)

90° Fixed Type

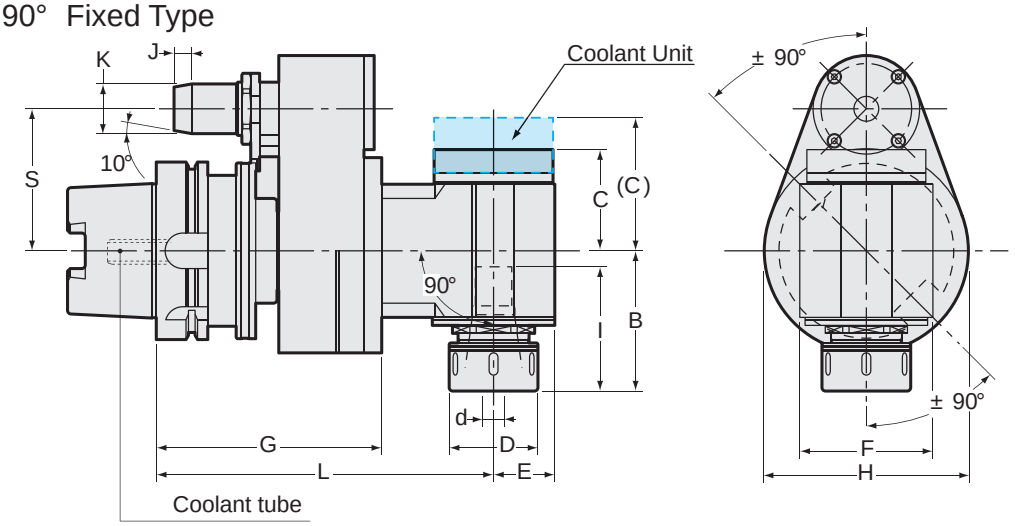

● Coolant tube is included.

※ Requires a positioning block. Please refer to P.179-180.

Unit : Inch

Code	Model	d	L	G	E	D	F	H	C (C)	B	I	J	K	S
5660 251176 ※※	**HSK63A -AHE1190 -170 -65-** ※※	0.020-0.276	6.693	4.843	0.669	0.906	2.008	3.543	1.299 (1.830)	1.693	1.575	0.315	0.772 (19.6mm)	2.559 (65mm)
5660 251106 ※※	**-200 -65-** ※※	0.020-0.276	7.874	4.843	0.669	0.906	2.008	3.543	1.299 (1.830)	1.693	1.575	0.315	0.772 (19.6mm)	2.559 (65mm)
5660 251136 ※※	**-230 -65-** ※※	0.020-0.276	9.055	4.843	0.669	0.906	2.008	3.543	1.299 (1.830)	1.693	1.575	0.315	0.772 (19.6mm)	2.559 (65mm)
5660 251166 ※※	**-260 -65-** ※※	0.020-0.276	10.236	5.512	0.669	0.906	2.008	3.543	1.299 (1.830)	1.693	1.575	0.315	0.772 (19.6mm)	2.559 (65mm)
5660 251196 ※※	**-290 -65-** ※※	0.020-0.276	11.417	5.512	0.669	0.906	2.008	3.543	1.299 (1.830)	1.693	1.575	0.315	0.772 (19.6mm)	2.559 (65mm)
5660 251676 ※※	**HSK63A -AHE1690 -170 -65-** ※※	0.020-0.394	6.693	4.843	0.866	1.260	2.283	3.543	1.752 (2.303)	2.441	2.559	0.315	0.772 (19.6mm)	2.559 (65mm)
5660 251606 ※※	**-200 -65-** ※※	0.020-0.394	7.874	4.843	0.866	1.260	2.283	3.543	1.752 (2.303)	2.441	2.559	0.315	0.772 (19.6mm)	2.559 (65mm)
5660 251636 ※※	**-230 -65-** ※※	0.020-0.394	9.055	4.843	0.866	1.260	2.283	3.543	1.752 (2.303)	2.441	2.559	0.315	0.772 (19.6mm)	2.559 (65mm)
5660 251666 ※※	**-260 -65-** ※※	0.020-0.394	10.236	5.512	0.866	1.260	2.283	3.543	1.752 (2.303)	2.441	2.559	0.315	0.772 (19.6mm)	2.559 (65mm)
5660 252076 ※※	**HSK63A -AHE2090 -170 -65-** ※※	0.020-0.512	6.693	4.843	1.102	1.378	2.638	3.543	2.008 (2.539)	2.717	2.717	0.315	0.772 (19.6mm)	2.559 (65mm)
5660 252006 ※※	**-200 -65-** ※※	0.020-0.512	7.874	4.843	1.102	1.378	2.638	3.543	2.008 (2.539)	2.717	2.717	0.315	0.772 (19.6mm)	2.559 (65mm)
5660 252036 ※※	**-230 -65-** ※※	0.020-0.512	9.055	4.843	1.102	1.378	2.638	3.543	2.008 (2.539)	2.717	2.717	0.315	0.772 (19.6mm)	2.559 (65mm)
5660 252576 ※※	**HSK63A -AHE2590 -170 -65-** ※※	0.020-0.630	6.693	4.843	1.102	1.654	2.638	3.543	2.008 (2.539)	2.717	2.717	0.315	0.772 (19.6mm)	2.559 (65mm)
5660 252506 ※※	**-200 -65-** ※※	0.020-0.630	7.874	4.843	1.102	1.654	2.638	3.543	2.008 (2.539)	2.717	2.717	0.315	0.772 (19.6mm)	2.559 (65mm)
5660 252536 ※※	**-230 -65-** ※※	0.020-0.630	9.055	4.843	1.102	1.654	2.638	3.543	2.008 (2.539)	2.717	2.717	0.315	0.772 (19.6mm)	2.559 (65mm)
5660 271178 ※※	**HSK100A -AHE1190 -175 -80-** ※※	0.020-0.276	6.890	5.039	0.669	0.906	2.008	3.543	1.299 (1.830)	1.693	1.575	0.394	1.102 (28mm)	3.150 (80mm)
5660 271108 ※※	**-205 -80-** ※※	0.020-0.276	8.071	5.039	0.669	0.906	2.008	3.543	1.299 (1.830)	1.693	1.575	0.394	1.102 (28mm)	3.150 (80mm)
5660 271138 ※※	**-235 -80-** ※※	0.020-0.276	9.252	5.039	0.669	0.906	2.008	3.543	1.299 (1.830)	1.693	1.575	0.394	1.102 (28mm)	3.150 (80mm)
5660 271168 ※※	**-265 -80-** ※※	0.020-0.276	10.433	5.709	0.669	0.906	2.008	3.543	1.299 (1.830)	1.693	1.575	0.394	1.102 (28mm)	3.150 (80mm)
5660 271198 ※※	**-295 -80-** ※※	0.020-0.276	11.614	5.709	0.669	0.906	2.008	3.543	1.299 (1.830)	1.693	1.575	0.394	1.102 (28mm)	3.150 (80mm)

Inch to Metric (mm) → Inch × 25.4
Metric (mm) to Inch → Metric ÷ 25.4 or Metric × 0.03937

Special / Custom Sizes on request

Unit : Inch

Code	Model	d	L	G	E	D	F	H	C (C)	B	I	J	K	S
5660 271678 ※※	**HSK100A -AHE1690 -175 -80-** ※※	0.020-0.394	6.890	5.039	0.866	1.260	2.283	3.543	1.752 (2.303)	2.441	2.559	0.394	1.102 (28mm)	3.150 (80mm)
5660 271608 ※※	**-205 -80-** ※※	0.020-0.394	8.071	5.039	0.866	1.260	2.283	3.543	1.752 (2.303)	2.441	2.559	0.394	1.102 (28mm)	3.150 (80mm)
5660 271638 ※※	**-235 -80-** ※※	0.020-0.394	9.252	5.039	0.866	1.260	2.283	3.543	1.752 (2.303)	2.441	2.559	0.394	1.102 (28mm)	3.150 (80mm)
5660 271668 ※※	**-265 -80-** ※※	0.020-0.394	10.433	5.709	0.866	1.260	2.283	3.543	1.752 (2.303)	2.441	2.559	0.394	1.102 (28mm)	3.150 (80mm)
5660 272078 ※※	**HSK100A -AHE2090 -175 -80-** ※※	0.020-0.512	6.890	5.039	1.102	1.378	2.638	3.543	2.008 (2.539)	2.717	2.717	0.394	1.102 (28mm)	3.150 (80mm)
5660 272008 ※※	**-205 -80-** ※※	0.020-0.512	8.071	5.039	1.102	1.378	2.638	3.543	2.008 (2.539)	2.717	2.717	0.394	1.102 (28mm)	3.150 (80mm)
5660 272038 ※※	**-235 -80-** ※※	0.020-0.512	9.252	5.039	1.102	1.378	2.638	3.543	2.008 (2.539)	2.717	2.717	0.394	1.102 (28mm)	3.150 (80mm)
5660 272578 ※※	**HSK100A -AHE2590 -175 -80-** ※※	0.020-0.630	6.890	5.039	1.102	1.654	2.638	3.543	2.008 (2.539)	2.717	2.717	0.394	1.102 (28mm)	3.150 (80mm)
5660 272508 ※※	**-205 -80-** ※※	0.020-0.630	8.071	5.039	1.102	1.654	2.638	3.543	2.008 (2.539)	2.717	2.717	0.394	1.102 (28mm)	3.150 (80mm)
5660 272538 ※※	**-235 -80-** ※※	0.020-0.630	9.252	5.039	1.102	1.654	2.638	3.543	2.008 (2.539)	2.717	2.717	0.394	1.102 (28mm)	3.150 (80mm)
5660 273298 ※※	**HSK100A -AHE3290 -190 -80-** ※※	0.098-0.787	7.480	5.000	1.358	1.969	2.953	4.528	2.244 (2.776)	3.110	2.953	0.394	1.102 (28mm)	3.150 (80mm)
5660 273228 ※※	**-220 -80-** ※※	0.098-0.787	8.661	5.000	1.358	1.969	2.953	4.528	2.244 (2.776)	3.110	2.953	0.394	1.102 (28mm)	3.150 (80mm)
5660 273258 ※※	**-250 -80-** ※※	0.098-0.787	9.843	5.000	1.358	1.969	2.953	4.528	2.244 (2.776)	3.110	2.953	0.394	1.102 (28mm)	3.150 (80mm)
5660 274008 ※※	**HSK100A -AHE4090 -205 -80-** ※※	0.118-1.024	8.071	5.000	1.772	2.480	3.543	4.528	2.874 (3.406)	3.740	3.937	0.394	1.102 (28mm)	3.150 (80mm)
5660 274001 ※※	**-205 -110-** ※※	0.118-1.024	8.071	5.000	1.772	2.480	3.543	4.528	2.874 (3.406)	3.740	3.937	0.394	1.102 (28mm)	4.331 (110mm)

1. ※ is for A dimension. Please refer to P. 179.
2. When ordering, please specify plunger size ("A" dimension).
3. Center-thru coolant types are produced upon request.
4. Plunger is fixed (non-adjustable)
5. Collet and spanner are sold separately.

Size	Collet	Nut	Spanner
AHE1190	**ER11**	**HDP-07A**	**S-0**
AHE1690	**ER16**	**ERP-16**	**FK0030**
AHE2090	**ER20**	**ERP-20**	**FK0034**
AHE2590	**ER25**	**ERP-25**	**HS-1-16**
AHE3290	**ER32**	**ERP-32**	**HS-2-20**
AHE4090	**ER40**	**ERP-40**	**HS-2.5-25**

Collet
P. 090-091



Spanner
P. 095



Ordering Example

HSK63A - AH 16 90 - 170 - 65 - **

Shank size	Max. collet I.D.	Angle	Projection length (L)	S	Dimension A

Inch to Metric (mm) → Inch × 25.4
Metric (mm) to Inch → Metric ÷ 25.4 or Metric × 0.03937

Special / Custom Sizes on request

AHSE, AHLE

0°-90°

Angle Heads (ER Collet Type)

Flexible Type

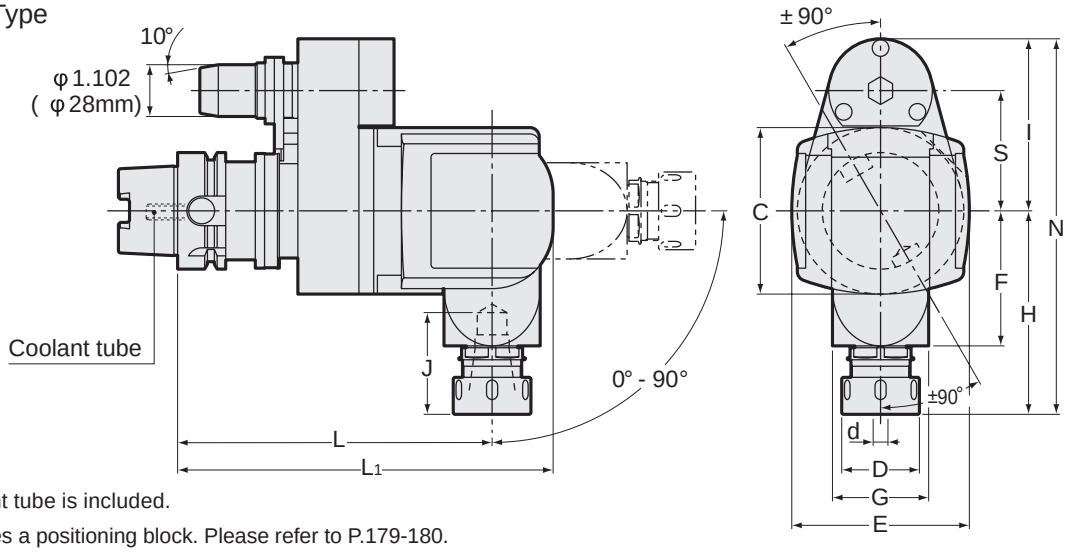

● Coolant tube is included.

※ Requires a positioning block. Please refer to P.179-180.

Unit : Inch

Code	Model	d	L	L1	D	C	E	F	G	H	J	I	N	S
5634 051176**	HSK63A -AHSE11 -170 -65-**	0.020-0.276	6.693	7.992	0.906	3.543	3.780	2.874	2.047	3.937	2.559	3.661	7.598	2.559 (65mm)
5634 051676**	HSK63A -AHSE16 -170 -65-**	0.020-0.394	6.693	7.992	1.260	3.543	3.780	2.874	2.047	4.331	2.559	3.661	7.992	2.559 (65mm)
5634 052076**	HSK63A -AHSE20 -170 -65-**	0.020-0.512	6.693	7.992	1.378	3.543	3.780	2.874	2.047	4.331	2.165	3.661	7.992	2.559 (65mm)
5634 052576**	HSK63A -AHSE25 -170 -65-**	0.020-0.630	6.693	7.992	1.654	3.543	3.780	2.874	2.047	4.331	2.165	3.661	7.992	2.559 (65mm)
5634 071178**	HSK100A -AHSE11 -175 -80-**	0.020-0.276	6.890	8.189	0.906	3.543	3.780	2.874	2.047	3.937	2.559	4.252	8.189	3.150 (80mm)
5634 071678**	HSK100A -AHSE16 -175 -80-**	0.020-0.394	6.890	8.189	1.260	3.543	3.780	2.874	2.047	4.331	2.559	4.252	8.583	3.150 (80mm)
5634 072078**	HSK100A -AHSE20 -175 -80-**	0.020-0.512	6.890	8.189	1.378	3.543	3.780	2.874	2.047	4.331	2.165	4.252	8.583	3.150 (80mm)
5634 072578**	HSK100A -AHSE25 -175 -80-**	0.020-0.630	6.890	8.189	1.654	3.543	3.780	2.874	2.047	4.331	2.165	4.252	8.583	3.150 (80mm)
5634 071171**	HSK100A -AHSE11 -175 -110-**	0.020-0.276	6.890	8.189	0.906	3.543	3.780	2.874	2.047	3.937	2.559	5.433	9.370	4.331 (110mm)
5634 071671**	HSK100A -AHSE16 -175 -110-**	0.020-0.394	6.890	8.189	1.260	3.543	3.780	2.874	2.047	4.331	2.559	5.433	9.764	4.331 (110mm)
5634 072071**	HSK100A -AHSE20 -175 -110-**	0.020-0.512	6.890	8.189	1.378	3.543	3.780	2.874	2.047	4.331	2.165	5.433	9.764	4.331 (110mm)
5634 072571**	HSK100A -AHSE25 -175 -110-**	0.020-0.630	6.890	8.189	1.654	3.543	3.780	2.874	2.047	4.331	2.165	5.433	9.764	4.331 (110mm)
5634 172078**	HSK100A -AHLE20 -175 -80-**	0.020-0.512	6.890	8.465	1.378	4.331	4.646	3.071	2.598	4.724	2.953	4.252	8.976	3.150 (80mm)
5634 172578**	HSK100A -AHLE25 -175 -80-**	0.020-0.630	6.890	8.465	1.654	4.331	4.646	3.071	2.598	4.724	2.953	4.252	8.976	3.150 (80mm)
5634 173278**	HSK100A -AHLE32 -175 -80-**	0.098-0.787	6.890	8.465	1.969	4.331	4.646	3.071	2.598	4.724	2.953	4.252	8.976	3.150 (80mm)
5634 172071**	HSK100A -AHLE20 -175 -110-**	0.020-0.512	6.890	8.465	1.378	4.331	4.646	3.071	2.598	4.724	2.953	5.433	10.157	4.331 (110mm)
5634 172571**	HSK100A -AHLE25 -175 -110-**	0.020-0.630	6.890	8.465	1.654	4.331	4.646	3.071	2.598	4.724	2.953	5.433	10.157	4.331 (110mm)
5634 173271**	HSK100A -AHLE32 -175 -110-**	0.098-0.787	6.890	8.465	1.969	4.331	4.646	3.071	2.598	4.724	2.953	5.433	10.157	4.331 (110mm)

1. ※ is for A dimension. Please refer to P. 179.
2. When ordering, please specify plunger size ("A" dimension).
3. Center-thru coolant types are produced upon request.
4. Plunger is fixed (non-adjustable)
5. Collet and spanner are sold separately.

Size	Collet	Nut	Spanner
AHSE11	ER11	HDP-07A	S-0
AHSE16	ER16	ERP-16	FK0030
AHSE20	ER20	ERP-20	FK0034
AHSE25	ER25	ERP-25	HS-1-16
AHLE20	ER20	ERP-20	FK0034
AHLE25	ER25	ERP-25	HS-1-16
AHLE32	ER32	ERP-32	HS-2-20

Ordering Example

HSK63A	- AHE	16	90	- 170	- 65	- **
Shank size		Max. collet I.D.	Angle	Projection length (L)	S	Dimension A

Collet P. 090-091

Spanner P. 095





Inch to Metric (mm) → Inch × 25.4
Metric (mm) to Inch → Metric ÷ 25.4 or Metric × 0.03937

Special / Custom Sizes on request

HDC·A

High-Precision Collet Holder

● Suitable for drilling, reaming and finish endmilling.

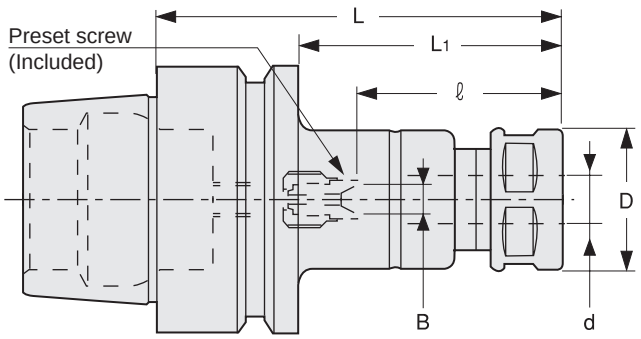

Unit : Metric

Code	Model	d	L	L1	B	ℓ	D	Nut	Preset Screw	Collet	Spanner
5360 51107040	**HSK25E -HDC07A -40**	0.5 ~ 7.0	40	30	–	29	23	HDP-07A	–	FDC-07	S-0
5360 51107060	**-60**	0.5 ~ 7.0	60	50	0 ~ 4	22 ~ 30	23	HDP-07A	HDS-07		
5360 51109045	**HSK25E -HDC09A -45**	2.5 ~ 9.0	45	35	–	33	26	HDP-09	–	FDC-09	S-1L
5360 51109060	**-60**	2.5 ~ 9.0	60	50	0 ~ 4	27 ~ 36	26	HDP-09	HDS-09		
5360 52107045	**HSK32E -HDC07A -45**	0.5 ~ 7.0	45	25	–	31	23	HDP-07A	–	FDC-07	S-0
5360 52107060	**-60**	0.5 ~ 7.0	60	40	0 ~ 4	22 ~ 27	23	HDP-07A	HDS-07		
5360 52109050	**HSK32E -HDC09A -50**	2.5 ~ 9.0	50	30	–	35	26	HDP-09	–	FDC-09	S-1L
5360 52109060	**-60**	2.5 ~ 9.0	60	40	0 ~ 4	27 ~ 33	26	HDP-09	HDS-09		
5360 52112060	**HSK32E -HDC12A -60**	2.5 ~ 12.0	60	40	–	44	32	HDP-12	–	FDC-12	S-3L
5360 52112075	**-75**	2.5 ~ 12.0	75	55	0 ~ 5	33 ~ 47	32	HDP-12	HDS-12		
5360 53107045	**HSK40E -HDC07A -45**	0.5 ~ 7.0	45	25	–	31	23	HDP-07A	–	FDC-07	S-0
5360 53107060	**-60**	0.5 ~ 7.0	60	40	0 ~ 4	22 ~ 27	23	HDP-07A	HDS-07		
5360 53107075	**-75**	0.5 ~ 7.0	75	55	0 ~ 4	22 ~ 42	23	HDP-07A	HDS-07		
5360 53107090	**-90**	0.5 ~ 7.0	90	70	0 ~ 4	22 ~ 45	23	HDP-07A	HDS-07		
5360 53107120	**-120**	0.5 ~ 7.0	120	100	0 ~ 4	22 ~ 45	23	HDP-07A	HDS-07		
5360 53109045	**HSK40E -HDC09A -45**	2.5 ~ 9.0	45	25	–	30	26	HDP-09	–	FDC-09	S-1L
5360 53109060	**-60**	2.5 ~ 9.0	60	40	0 ~ 4	27 ~ 32	26	HDP-09	HDS-09		
5360 53109075	**-75**	2.5 ~ 9.0	75	55	0 ~ 4	27 ~ 42	26	HDP-09	HDS-09		
5360 53109090	**-90**	2.5 ~ 9.0	90	70	0 ~ 4	27 ~ 57	26	HDP-09	HDS-09		
5360 53109120	**-120**	2.5 ~ 9.0	120	100	0 ~ 4	27 ~ 57	26	HDP-09	HDS-09		
5360 53112060	**HSK40E -HDC12A -60**	2.5 ~ 12.0	60	40	–	44	32	HDP-12	–	FDC-12	S-3L
5360 53112075	**-75**	2.5 ~ 12.0	75	55	0 ~ 5	33 ~ 46	32	HDP-12	HDS-12		
5360 53112090	**-90**	2.5 ~ 12.0	90	70	0 ~ 5	33 ~ 49	32	HDP-12	HDS-12		
5360 53112120	**-120**	2.5 ~ 12.0	120	100	0 ~ 5	33 ~ 69	32	HDP-12	HDS-12		
5360 53112150	**-150**	2.5 ~ 12.0	150	130	0 ~ 5	33 ~ 69	32	HDP-12	HDS-12		
5360 53116060	**HSK40E -HDC16A -60**	3.5 ~ 16.0	60	40	–	43	36	HDP-16	–	FDC-16	S-4L
5360 53116075	**-75**	3.5 ~ 16.0	75	55	0 ~ 6	38 ~ 46	36	HDP-16	HDS-16		
5360 53116090	**-90**	3.5 ~ 16.0	90	70	0 ~ 6	38 ~ 48	36	HDP-16	HDS-16		
5360 53116120	**-120**	3.5 ~ 16.0	120	100	0 ~ 6	38 ~ 78	36	HDP-16	HDS-16		
5360 53116150	**-150**	3.5 ~ 16.0	150	130	0 ~ 6	38 ~ 82	36	HDP-16	HDS-16		
5360 54107045	**HSK50E -HDC07A -45**	0.5 ~ 7.0	45	19	–	28	23	HDP-07A	–	FDC-07	S-0
5360 54107060	**-60**	0.5 ~ 7.0	60	34	0 ~ 4	22 ~ 28	23	HDP-07A	HDS-07		
5360 54107075	**-75**	0.5 ~ 7.0	75	49	0 ~ 4	22 ~ 39	23	HDP-07A	HDS-07		
5360 54107090	**-90**	0.5 ~ 7.0	90	64	0 ~ 4	22 ~ 45	23	HDP-07A	HDS-07		
5360 54107120	**-120**	0.5 ~ 7.0	120	94	0 ~ 4	22 ~ 45	23	HDP-07A	HDS-07		
5360 54109060	**HSK50E -HDC09A -60**	2.5 ~ 9.0	60	34	–	42	26	HDP-09	–	FDC-09	S-1L
5360 54109075	**-75**	2.5 ~ 9.0	75	49	0 ~ 4	27 ~ 38	26	HDP-09	HDS-09		
5360 54109090	**-90**	2.5 ~ 9.0	90	64	0 ~ 4	27 ~ 53	26	HDP-09	HDS-09		
5360 54109120	**-120**	2.5 ~ 9.0	120	94	0 ~ 4	27 ~ 57	26	HDP-09	HDS-09		

Inch to Metric (mm) → Inch × 25.4
Metric (mm) to Inch → Metric ÷ 25.4 or Metric × 0.03937

Special / Custom Sizes on request

Unit : Metric

Code	Model	d	L	L1	B	ℓ	D	Nut	Preset Screw	Collet	Spanner
5360 54112060	HSK50E -HDC12A -60	2.5 ~ 12.0	60	34	—	41	32	HDP-12	—	FDC-12	S-3L
5360 54112075	-75	2.5 ~ 12.0	75	49	0 ~ 5	33 ~ 43	32	HDP-12	HDS-12		
5360 54112090	-90	2.5 ~ 12.0	90	64	0 ~ 5	33 ~ 46	32	HDP-12	HDS-12		
5360 54112120	-120	2.5 ~ 12.0	120	94	0 ~ 5	33 ~ 69	32	HDP-12	HDS-12		
5360 54112150	-150	2.5 ~ 12.0	150	124	0 ~ 5	33 ~ 69	32	HDP-12	HDS-12		
5360 54116060	HSK50E -HDC16A -60	3.5 ~ 16.0	60	34	—	40	36	HDP-16	—	FDC-16	S-4L
5360 54116075	-75	3.5 ~ 16.0	75	49	—	54	36	HDP-16	HDS-16		
5360 54116090	-90	3.5 ~ 16.0	90	64	0 ~ 6	38 ~ 48	36	HDP-16	HDS-16		
5360 54116120	-120	3.5 ~ 16.0	120	94	0 ~ 6	38 ~ 78	36	HDP-16	HDS-16		
5360 54116150	-150	3.5 ~ 16.0	150	124	0 ~ 6	38 ~ 82	36	HDP-16	HDS-16		
5360 54122075	HSK50E -HDC22A -75	3.5 ~ 22.0	75	49	—	53	46	HDP-22	—	FDC-22	S-5L
5360 54122090	-90	3.5 ~ 22.0	90	64	0 ~ 8	47 ~ 56	46	HDP-22	HDS-22		
5360 54122120	-120	3.5 ~ 22.0	120	94	0 ~ 8	47 ~ 73	46	HDP-22	HDS-22		
5360 54122150	-150	3.5 ~ 22.0	150	124	0 ~ 8	47 ~ 103	46	HDP-22	HDS-22		

1. Collet, spanner and hexagon head preset screw are sold separately. Standard preset screw is included.
2. ℓ indicates dimension when using with a preset screw.
3. See P.499 for standard Tightening Torque.

Collet
P. 086 - 089

Spanner
P. 095

Preset screw
P. 094



Ordering Example

HSK50E - HDC 12 A - 60

- HSK50E: Shank size
- 12: Max. collet I.D.
- 60: Projection length (L)

Inch to Metric (mm) → Inch × 25.4
Metric (mm) to Inch → Metric ÷ 25.4 or Metric × 0.03937

Special / Custom Sizes on request

ERC

Collet Holder For Small Diameters

● For drilling in tight space.

Preset Screw
ERC8 Holder : Sold separately
Other Holder : Included

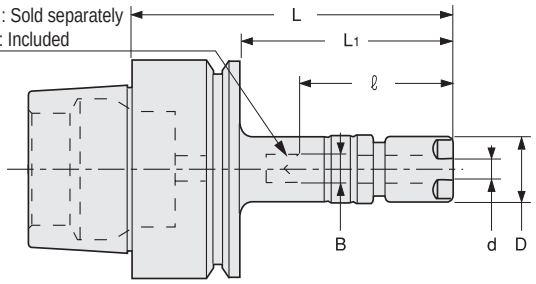

Unit : Metric

Code	Model	d	L	L1	B	ℓ	D	Nut	Preset Screw	Collet	Spanner
5370 50108035	**HSK25E -ERC8 -35**	0.5 ~ 5.0	35	25	–	24	12	ERP-8	–	ER8	S-8E
5370 50108045	**-45**	0.5 ~ 5.0	45	35	–	34	12	ERP-8	–		
5370 50108060	**-60**	0.5 ~ 5.0	60	50	– (0 ~ 2.4)	34 (19 ~ 23)	12	ERP-8	(ES8)		
5370 50110045	**HSK25E -ERC11S -45**	0.5 ~ 7.0	45	35	–	34	16	ERP-11S	–	ER11	S-11E
5370 50110060	**-60**	0.5 ~ 7.0	60	50	0 ~ 4	22 ~ 30	16	ERP-11S	HDS-07A-ES11		
5370 50208045	**HSK32E -ERC8 -45**	0.5 ~ 5.0	45	25	–	31	12	ERP-8	–	ER8	S-8E
5370 50208060	**-60**	0.5 ~ 5.0	60	40	–	34	12	ERP-8	–		
5370 50210045	**HSK32E -ERC11S -45**	0.5 ~ 7.0	45	25	–	31	16	ERP-11S	–	ER11	S-11E
5370 50210060	**-60**	0.5 ~ 7.0	60	40	0 ~ 4	22 ~ 27	16	ERP-11S	HDS-07A-ES11		
5370 50308040	**HSK40E -ERC8 -40**	0.5 ~ 5.0	40	20	–	26	12	ERP-8	–	ER8	S-8E
5370 50308060	**-60**	0.5 ~ 5.0	60	40	– (0 ~ 2.4)	34 (19 ~ 22)	12	ERP-8	(ES8)		
5370 50310045	**HSK40E -ERC11S -45**	0.5 ~ 7.0	45	25	–	31	16	ERP-11S	–	ER11	S-11E
5370 50310060	**-60**	0.5 ~ 7.0	60	40	0 ~ 4	22 ~ 24	16	ERP-11S	HDS-07A-ES11		
5370 50408045	**HSK50E -ERC8 -45**	0.5 ~ 5.0	45	19	–	35	12	ERP-8	–	ER8	S-8E
5370 50408060	**-60**	0.5 ~ 5.0	60	34	–	50	12	ERP-8	–		
5370 50408075	**-75**	0.5 ~ 5.0	75	49	– (0 ~ 2.4)	34 (19 ~ 26)	12	ERP-8	(ES8)		
5370 50410045	**HSK50E -ERC11S -45**	0.5 ~ 7.0	45	19	–	28	16	ERP-11S	–	FDC-07	S-11E
5370 50410060	**-60**	0.5 ~ 7.0	60	34	0 ~ 4	22 ~ 28	16	ERP-11S	HDS-07A-ES11		
5370 50410075	**-75**	0.5 ~ 7.0	75	49	0 ~ 4	22 ~ 39	16	ERP-11S	HDS-07A-ES11		

1.Collet and spanner are sold separately.
2.ES8, a preset screw for ERC8, is sold separately.
3." B " and " ℓ " dimensions in brackets are for using ES8 preset screw.
4.See P.499 for standard Tightening Torque.

Collet P. 090-091
Spanner P. 095
Preset screw P. 094

Ordering Example

HSK40E - **ERC** **8** - **40**
Shank size — Max. collet I.D. — Projection length (L)

Inch to Metric (mm) → Inch × 25.4
Metric (mm) to Inch → Metric ÷ 25.4 or Metric × 0.03937

Special / Custom Sizes on request

PHC·A

Power Hydro Chuck

● Hydro chuck with collet holder flexibility. Suitable for high precision cutting.

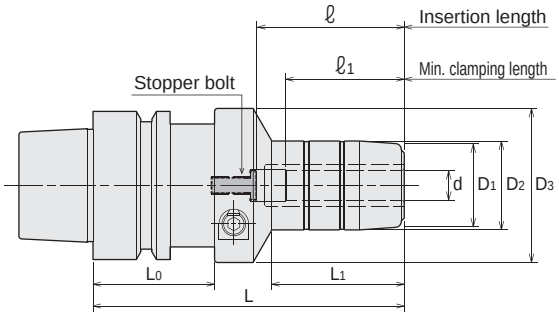

Metric Sizes

Unit : Metric

Code	Model	d	L	L1	D1	D2	D3	L0	ℓ	ℓ 1	Kg	Wrench (Option)
5730 53206090	**HSK40E -PHC06A-90**	6	90	30	24	26	46	35	34	29	0.7	L-4T (4mm)
5730 53207090	**HSK40E -PHC07A-90**	7	90	30	26	28	46	35	34	29		
5730 53208090	**HSK40E -PHC08A-90**	8	90	30	26	28	46	35	34	29		
5730 53209105	**HSK40E -PHC09A-105**	9	105	44	28	30	52	35	50	40		
5730 53210105	**HSK40E -PHC10A-105**	10	105	44	28	30	52	35	50	40		
5730 53211105	**HSK40E -PHC11A-105**	11	105	45	30	32	52	35	50	40		
5730 53212105	**HSK40E -PHC12A-105**	12	105	45	30	32	52	35	50	40		
5730 54206090	**HSK50E -PHC06A-90**	6	90	30	24	26	46	41	34	29	0.9	L-4T (4mm)
5730 54207090	**HSK50E -PHC07A-90**	7	90	30	26	28	46	41	34	29		
5730 54208090	**HSK50E -PHC08A-90**	8	90	30	26	28	46	41	34	29		
5730 54209105	**HSK50E -PHC09A-105**	9	105	44	28	30	52	41	50	40		
5730 54210105	**HSK50E -PHC10A-105**	10	105	44	28	30	52	41	50	40		
5730 54211105	**HSK50E -PHC11A-105**	11	105	45	30	32	52	41	50	40		
5730 54212105	**HSK50E -PHC12A-105**	12	105	45	30	32	52	41	50	40		
5730 54213105	**HSK50E -PHC13A-105**	13	105	46	34	36	52	41	50	40		
5730 54214105	**HSK50E -PHC14A-105**	14	105	46	34	36	52	41	50	40		
5730 54215105	**HSK50E -PHC15A-105**	15	105	46	36	38	52	41	50	40		
5730 54216105	**HSK50E -PHC16A-105**	16	105	46	36	38	52	41	50	40		
5730 54220105	**HSK50E -PHC20A-105**	20	105	49	40	42	46	41	50	40		

1.Please use a cutting tool with a tolerance of less than h7. A tolerance of less than 0/-001 is recommended for new cutting tools.

2.Do not leave the holder with actuating screw tightened when the chuck is empty.

3.PHC12A and PHC20A have pin holes for collet with stopper pin on its body.

Ordering Example

HSK50E - PHC 12 A - 105

Shank size | I.D. (d) | Projection length (L)

Tightening torque (Torque wrench : p.498)

model	I.D. (d) mm	Tightening torque (Nm)
PHC·A	06 ~ 08	11 ~ 12
PHC·A	09 ~ 20	7 ~ 8
PHC·A	25, 32	29 ~ 30

PHS Collet P.110

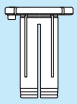

Hex. Wrench P. 095



Inch to Metric (mm) → Inch × 25.4
Metric (mm) to Inch → Metric ÷ 25.4 or Metric × 0.03937

Special / Custom Sizes on request

SRE

Shrink Fit (Small Diameter Type)

● Shrinkage method sets a cutting tool firmly by heating and cooling the chuck. High precision and strong chucking. (Small diameter type)

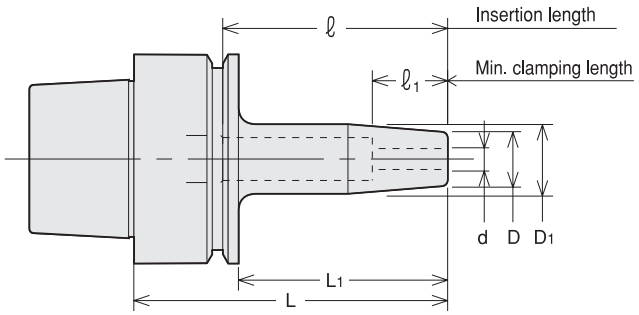

Metric Sizes

Unit : Metric

Code	Model	d	L	L1	D	D1	ℓ1	ℓ
5640 91103035	HSK25E -SRE3A -35	3	35	25	11.5	14.5	13	20
5640 91103050	-50	3	50	40	11.5	14.5	13	35
5640 91104035	HSK25E -SRE4A -35	4	35	25	11.5	14.5	16	20
5640 91104050	-50	4	50	40	11.5	14.5	16	35
5640 91105035	HSK25E -SRE5A -35	5	35	25	13	16	19	20
5640 91105050	-50	5	50	40	13	16	19	35
5640 91106035	HSK25E -SRE6A -35	6	35	25	13	16	19	20
5640 91106050	-50	6	50	40	13	16	24	35
5640 91108035	HSK25E -SRE8A -35	8	35	25	13	16	19	20
5640 91108050	-50	8	50	40	13	16	24	35
5640 91203045	HSK32E -SRE3A -45	3	45	25	11.5	14.5	13	28
5640 91203060	-60	3	60	40	11.5	14.5	13	43
5640 91204045	HSK32E -SRE4A -45	4	45	25	11.5	14.5	16	28
5640 91204060	-60	4	60	40	11.5	14.5	16	43
5640 91205045	HSK32E -SRE5A -45	5	45	25	13	16	19	28
5640 91205060	-60	5	60	40	13	16	19	43
5640 91206045	HSK32E -SRE6A -45	6	45	25	13	16	19	28
5640 91206060	-60	6	60	40	13	16	27	43
5640 91208045	HSK32E -SRE8A -45	8	45	25	13	16	19	28
5640 91208060	-60	8	60	40	13	16	27	43
5640 91303045	HSK40E -SRE3A -45	3	45	25	11.5	14.5	13	28
5640 91303060	-60	3	60	40	11.5	14.5	13	43
5640 91304045	HSK40E -SRE4A -45	4	45	25	11.5	14.5	16	28
5640 91304060	-60	4	60	40	11.5	14.5	16	43
5640 91305045	HSK40E -SRE5A -45	5	45	25	13	16	19	28
5640 91305060	-60	5	60	40	13	16	19	43
5640 91306045	HSK40E -SRE6A -45	6	45	25	13	16	19	28
5640 91306060	-60	6	60	40	13	16	27	43
5640 91306080	-80	6	80	60	13	18	27	63
5640 91308045	HSK40E -SRE8A -45	8	45	25	13	16	19	28
5640 91308060	-60	8	60	40	13	16	27	43
5640 91308080	-80	8	80	60	13	18	27	63
5640 91403050	HSK50E -SRE3A -50	3	50	24	11.5	14.5	13	31
5640 91403070	-70	3	70	44	11.5	14.5	13	51
5640 91404050	HSK50E -SRE4A -50	4	50	24	11.5	14.5	16	31
5640 91404070	-70	4	70	44	11.5	14.5	16	51
5640 91405050	HSK50E -SRE5A -50	5	50	24	13	16	19	31
5640 91405070	-70	5	70	44	13	16	19	51
5640 91406050	HSK50E -SRE6A -50	6	50	24	13	16	19	31
5640 91406070	-70	6	70	44	13	16	27	51
5640 91406090	-90	6	90	64	13	18	27	71
5640 91408050	HSK50E -SRE8A -50	8	50	24	13	16	19	31
5640 91408070	-70	8	70	44	13	16	27	51
5640 91408090	-90	8	90	64	13	18	27	71

Heating device chart

heating device	chuck	
	L1 ≦ 60mm	L1 > 60mm
ISG3400	Yes *	Yes
SRK-HA1, HB2	No	No

*Special induction coil is needed. Refer to P.500-501.

1. Always use carbide shank tools with h6 tolerance.
2. Center through coolant is not possible with SRE3A and SRE4A.

Ordering Example

HSK40E - SRE 6 A - 80

Shank size | I.D. (d) | Projection length (L)

Inch to Metric (mm) → Inch × 25.4
Metric (mm) to Inch → Metric ÷ 25.4 or Metric × 0.03937

Special / Custom Sizes on request

SRD

Shrink Fit (DIN Standard)

● Shrinkage method sets a cutting tool firmly by heating and cooling the chuck. High precision, rigidity and strong chucking. (DIN Type)

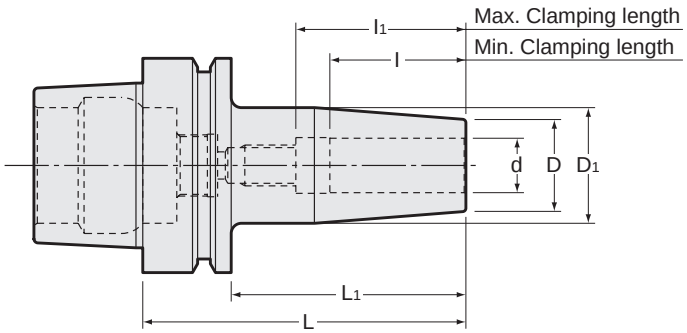

Inch Sizes

Unit : Inch

Code	Model	d	L	L1	D	D1	l	l1
5644 43308080	HSK40E -SRD0250 A -80	0.250	3.150	2.362	0.827	1.063	1.024	1.417
5644 43308120	-120	0.250	4.724	3.937	0.827	1.063	1.024	1.417
5644 43308160	-160	0.250	6.299	5.512	0.827	1.063	1.024	1.417
5644 43310080	HSK40E -SRD0312 A -80	0.312	3.150	2.362	0.827	1.063	1.024	1.417
5644 43310120	-120	0.312	4.724	3.937	0.827	1.063	1.024	1.969
5644 43310160	-160	0.312	6.299	5.512	0.827	1.063	1.024	1.969
5644 43312080	HSK40E -SRD0375 A -80	0.375	3.150	2.362	0.945	1.260	1.260	1.654
5644 43312120	-120	0.375	4.724	3.937	0.945	1.260	1.260	1.969
5644 43312160	-160	0.375	6.299	5.512	0.945	1.260	1.260	1.969
5644 43316090	HSK40E -SRD0500 A -90	0.500	3.543	2.756	0.945	1.260	1.457	1.850
5644 43316120	-120	0.500	4.724	3.937	0.945	1.260	1.457	2.756
5644 43316160	-160	0.500	6.299	5.512	0.945	1.260	1.457	2.756
5644 43320090	HSK40E -SRD0625 A -90	0.625	3.543	2.756	1.063	1.339	1.575	1.969
5644 43320120	-120	0.625	4.724	3.937	1.063	1.339	1.575	2.756
5644 43320160	-160	0.625	6.299	5.512	1.063	1.339	1.575	2.756

Always use carbide shank tools with h6 tolerance.

Heating device chart

heating device	chuck	
	SRD0250A, SRD0312A	SRD0375A~SRD1500A
ISG3400	Yes	Yes
SRK-HA1, HB2	No	Yes

Ordering Example

HSK40A - SRD 0250 A - 120

- HSK40A: Shank size
- 0250: I.D. (d)
- 120: Projection length (L)

Inch to Metric (mm) → Inch × 25.4
Metric (mm) to Inch → Metric ÷ 25.4 or Metric × 0.03937

Special / Custom Sizes on request

SRS

Shrink Fit (Slim Type)

● Shrinkage method sets a cutting tool firmly by heating and cooling the chuck. High precision and strong chucking. (Slim Type)

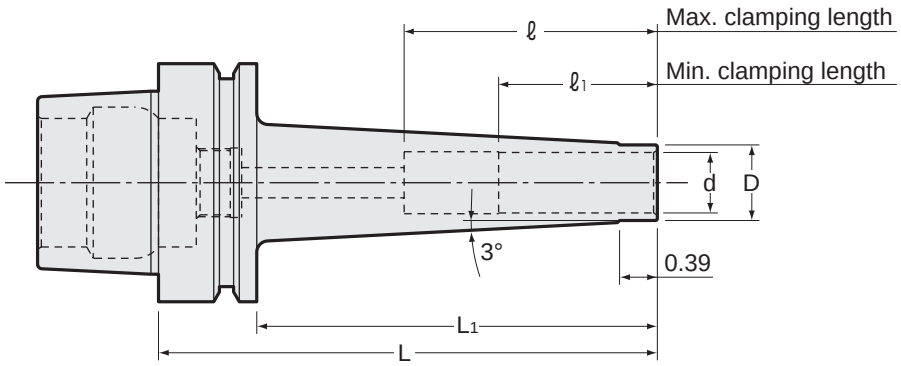

Inch Sizes

Unit : Inch

Code	Model	d	L	L1	D	ℓ1	ℓ
5644 33308090	**HSK40E -SRS0250A -90**	0.250	3.543	2.756	0.354	1.024	1.417
5644 33308120	**-120**	0.250	4.724	3.937	0.354	1.024	1.417
5644 33310090	**HSK40E -SRS0312A -90**	0.312	3.543	2.756	0.433	1.024	1.969
5644 33310120	**-120**	0.312	4.724	3.937	0.433	1.024	1.969
5644 33312090	**HSK40E -SRS0375A -90**	0.375	3.543	2.756	0.512	1.260	1.969
5644 33312120	**-120**	0.375	4.724	3.937	0.512	1.260	1.969
5644 33316090	**HSK40E -SRS0500A -90**	0.500	3.543	2.756	0.591	1.457	2.756
5644 33316120	**-120**	0.500	4.724	3.937	0.591	1.457	2.756
5644 33320090	**HSK40E -SRS0625A -90**	0.625	3.543	2.756	0.787	1.575	2.756
5644 33320120	**-120**	0.625	4.724	3.937	0.787	1.575	3.150

Always use carbide shank tools with h6 tolerance.

Heating device chart

heating device	chuck	
	SRS0250A, SRS0312A SRS6A, SRS8A	SRS0375A~SRS0750A SRS10A~SRS20A
ISG3400	Yes	Yes
SRK-HA1, HB2	No	Yes

Ordering Example

HSK40E - SRS 0250 A - 120

- HSK40E: Shank size
- 0250: I.D. (d)
- 120: Projection length (L)

Inch to Metric (mm) → Inch × 25.4
Metric (mm) to Inch → Metric ÷ 25.4 or Metric × 0.03937

Special / Custom Sizes on request

MEMO

HDC·A

High-Precision Collet Holder

● Suitable for drilling, reaming and finish endmilling.

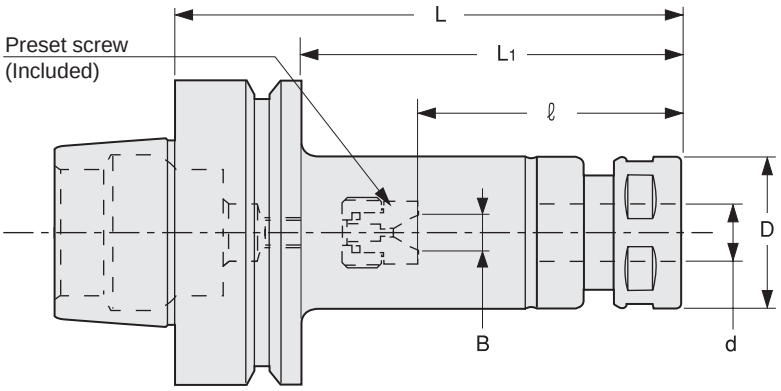

Unit : Metric

Code	Model	d	L	L1	B	ℓ	D	Nut	Preset Screw	Collet	Spanner
5360 65107075	**HSK63F -HDC07A-75**	0.5 ~ 7.0	75	49	0 ~ 4	22 ~ 30	23	HDP-07A	HDS-07	FDC-07	S-0
5360 65107090	**-90**	0.5 ~ 7.0	90	64	0 ~ 4	22 ~ 45	23	HDP-07A	HDS-07		
5360 65107105	**-105**	0.5 ~ 7.0	105	79	0 ~ 4	22 ~ 45	23	HDP-07A	HDS-07		
5360 65107135	**-135**	0.5 ~ 7.0	135	109	0 ~ 4	22 ~ 45	23	HDP-07A	HDS-07		
5360 65109075	**HSK63F -HDC09A-75**	2.5 ~ 9.0	75	49	0 ~ 4	27 ~ 36	26	HDP-09	HDS-09	FDC-09	S-1L
5360 65109090	**-90**	2.5 ~ 9.0	90	64	0 ~ 4	27 ~ 45	26	HDP-09	HDS-09		
5360 65109105	**-105**	2.5 ~ 9.0	105	79	0 ~ 4	27 ~ 57	26	HDP-09	HDS-09		
5360 65109135	**-135**	2.5 ~ 9.0	135	109	0 ~ 4	27 ~ 57	26	HDP-09	HDS-09		
5360 65109165	**-165**	2.5 ~ 9.0	165	139	0 ~ 4	27 ~ 57	26	HDP-09	HDS-09		
5360 65112075	**HSK63F -HDC12A-75**	2.5 ~ 12.0	75	49	—	48	32	HDP-12	—	FDC-12	S-3L
5360 65112090	**-90**	2.5 ~ 12.0	90	64	0 ~ 5	33 ~ 40	32	HDP-12	HDS-12		
5360 65112105	**-105**	2.5 ~ 12.0	105	79	0 ~ 5	33 ~ 55	32	HDP-12	HDS-12		
5360 65112135	**-135**	2.5 ~ 12.0	135	109	0 ~ 5	33 ~ 69	32	HDP-12	HDS-12		
5360 65112165	**-165**	2.5 ~ 12.0	165	139	0 ~ 5	33 ~ 69	32	HDP-12	HDS-12		
5360 65116075	**HSK63F -HDC16A-75**	3.5 ~ 16.0	75	49	—	47	36	HDP-16	—	FDC-16	S-4L
5360 65116090	**-90**	3.5 ~ 16.0	90	64	0 ~ 6	38 ~ 49	36	HDP-16	HDS-16		
5360 65116105	**-105**	3.5 ~ 16.0	105	79	0 ~ 6	38 ~ 52	36	HDP-16	HDS-16		
5360 65122075	**HSK63F -HDC22A-75**	3.5 ~ 22.0	75	49	—	50	46	HDP-22	—	FDC-22	S-5L
5360 65122090	**-90**	3.5 ~ 22.0	90	64	—	60	46	HDP-22	HDS-22		
5360 65122105	**-105**	3.5 ~ 22.0	105	79	0 ~ 8	47 ~ 62	46	HDP-22	HDS-22		

1. Collet, spanner and hexagon head preset screw are sold separately. Standard preset screw is included.
2. ℓ indicates dimension when using with a preset screw.
3. See P.499 for standard Tightening Torque.

Collet P. 086 - 089



Spanner P. 095



Preset screw P. 094



Ordering Example

HSK63F - HDC 12 A - 105

- HSK63F: Shank size
- 12: Max. collet I.D.
- 105: Projection length (L)

ERC

Collet Holder For Small Diameters

● For drilling in tight space.

Preset Screw
ERC8 Holder : Sold separately
Other Holder : Included

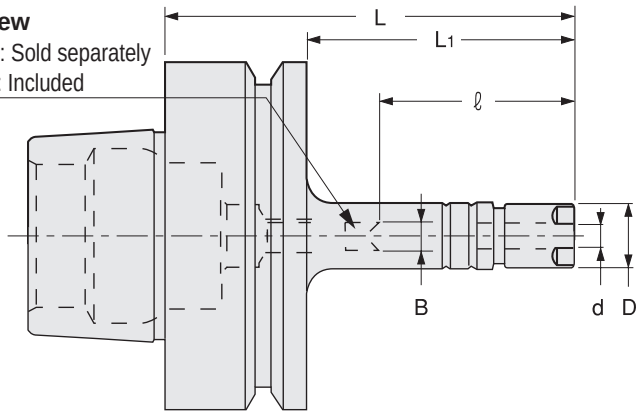

Unit : Metric

Code	Model	d	L	L1	B	ℓ	D	Nut	kg	Preset Screw	Collet	Spanner
5370 60508075	**HSK63F -ERC8 -75**	0.5 ~ 5.0	75	49	— (0 ~ 2.4)	34 (19 ~ 31)	12	ERP-8	0.7	ES8 (Option)	ER8	S-8E
5370 60508090	**-90**	0.5 ~ 5.0	90	64	— (0 ~ 2.4)	34 (19 ~ 31)	12	ERP-8				
5370 60508105	**-105**	0.5 ~ 5.0	105	79	— (0 ~ 2.4)	34 (19 ~ 31)	12	ERP-8	0.7			
5370 60510075	**HSK63F -ERC11S -75**	0.5 ~ 7.0	75	49	0 ~ 4	22 ~ 30	16	ERP-11S	0.8	HDS-07A-ES11 (Included)	FDC-07	S-11E
5370 60510090	**-90**	0.5 ~ 7.0	90	64	0 ~ 4	22 ~ 45	16	ERP-11S	0.8			
5370 60510105	**-105**	0.5 ~ 7.0	105	79	0 ~ 4	22 ~ 45	16	ERP-11S	0.8			

1.Collet and spanner are sold separately.
2.ES8, a preset screw for ERC8, is sold separately. ERC11S includes a standard preset screw HDS-07A-ES11.
3." B " and " ℓ " dimensions in brackets are for using ES8 preset screw.
4.See P.499 for standard Tightening Torque.

Collet	Spanner	Preset screw
P. 090-091	P. 095	P. 094





Ordering Example

HSK63F - ERC 8 - 75
Shank size | Max. collet I.D. | Projection length (L)

PHC·A

Power Hydro Chuck

● Hydro chuck with collet holder flexibility. Suitable for high precision cutting.

Type1

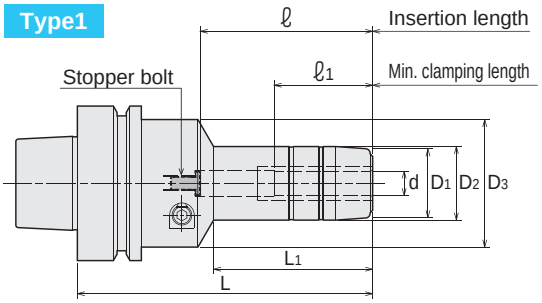

Type2

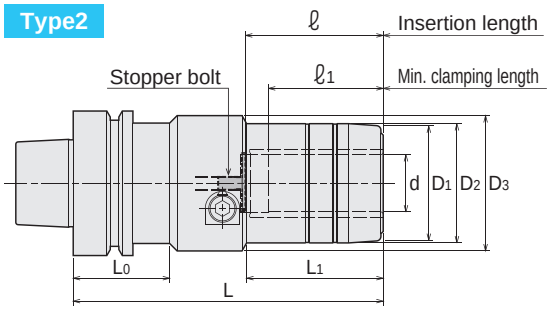

Metric Sizes

Unit : Metric

Code	Model	Type	d	L	L1	D1	D2	D3	L0	ℓ	ℓ1	Kg	Wrench (Option)
5730 65206075	**HSK63F -PHC06A-75**	1	6	75	30	24	26	46	—	34	29	1.0	
5730 65206120	**-120**	1	6	120	41	24	26	46	—	45	29		
5730 65207075	**HSK63F -PHC07A-75**	1	7	75	30	26	28	46	—	34	29		
5730 65207120	**-120**	1	7	120	41	26	28	46	—	45	29		
5730 65208075	**HSK63F -PHC08A-75**	1	8	75	30	26	28	46	—	34	29		
5730 65208120	**-120**	1	8	120	41	26	28	46	—	45	29		
5730 65209090	**HSK63F -PHC09A-90**	1	9	90	44	28	30	52	—	50	40		
5730 65209120	**-120**	1	9	120	64	28	30	52	—	70	40		
5730 65210090	**HSK63F -PHC10A-90**	1	10	90	44	28	30	52	—	50	40		
5730 65210120	**-120**	1	10	120	64	28	30	52	—	70	40		
5730 65211090	**HSK63F -PHC11A-90**	1	11	90	45	30	32	52	—	50	40		
5730 65211120	**-120**	1	11	120	65	30	32	52	—	70	40		
5730 65212090	**HSK63F -PHC12A-90**	1	12	90	45	30	32	52	—	50	40		L-4T (4mm)
5730 65212120	**-120**	1	12	120	65	30	32	52	—	70	40		
5730 65213090	**HSK63F -PHC13A-90**	1	13	90	46	34	36	52	—	50	40		
5730 65213120	**-120**	1	13	120	66	34	36	52	—	70	40		
5730 65214090	**HSK63F -PHC14A-90**	1	14	90	46	34	36	52	—	50	40		
5730 65214120	**-120**	1	14	120	66	34	36	52	—	70	40		
5730 65215090	**HSK63F -PHC15A-90**	1	15	90	46	36	38	52	—	50	40		
5730 65215120	**-120**	1	15	120	66	36	38	52	—	70	40		
5730 65216090	**HSK63F -PHC16A-90**	1	16	90	46	36	38	52	—	50	40		
5730 65216120	**-120**	1	16	120	66	36	38	52	—	70	40		
5730 65220090	**HSK63F -PHC20A-90**	1	20	90	49	40	42	46	—	50	40		
5730 65220120	**-120**	1	20	120	69	40	42	46	—	70	40		
5730 65225135	**HSK63F -PHC25A-135**	2	25	135	59	50	52	59	42	60	50		L-6T (6mm)
5730 65225150	**-150**	2	25	150	79	50	52	59	42	80	50		
5730 65232135	**HSK63F -PHC32A-135**	2	32	135	42	60	62	85	42	80	65		
5730 65232150	**-150**	2	32	150	108	60	62	62	42	80	65		

1. Please use a cutting tool with a tolerance of less than h7. A tolerance of less than 0/-001 is recommended for new cutting tools.
2. Do not leave the holder with actuating screw tightened when the chuck is empty.
3. PHC12A and PHC20A have pin holes for collet with stopper pin on its body.

Ordering Example

HSK63F - PHC 12 A - 135

Shank size | I.D. (d) | Projection length (L)

Tightening torque (Torque wrench : p.498)

model	I.D. (d) mm	Tightening torque (Nm)
PHC·A	06 ~ 08	11 ~ 12
PHC·A	09 ~ 20	7 ~ 8
PHC·A	25, 32	29 ~ 30

PHS Collet
P.110

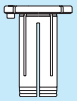

Hex. Wrench
P. 095



Inch to Metric (mm) → Inch × 25.4
Metric (mm) to Inch → Metric ÷ 25.4 or Metric × 0.03937

Special / Custom Sizes on request

MEMO

MN5523·J

Manual Flange

NT-MAPAL Clamping unit

How to install

1. Insert the holder into the spindle.
2. Turn the cover ring.
3. Insert the wrench into the clamp bolt and turn it clockwise.
4. Remove the wrench and cover the hex hole for the wrench by turning the cover ring.

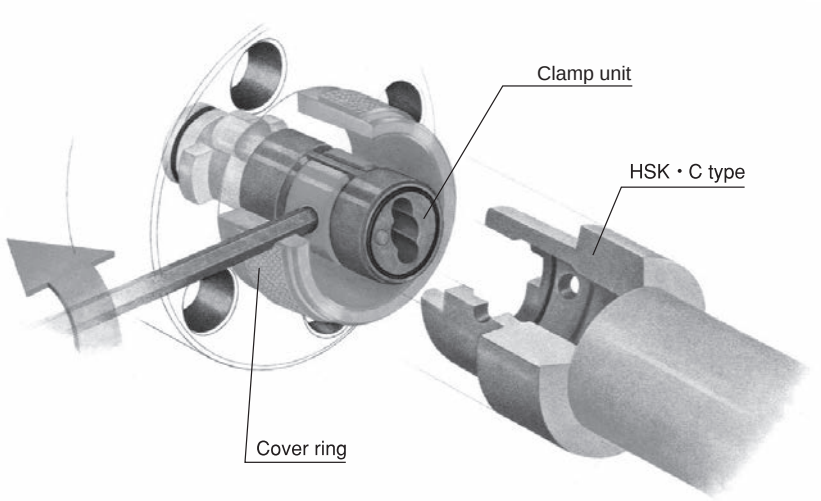

Feature

Ultimate dynamic rigidity

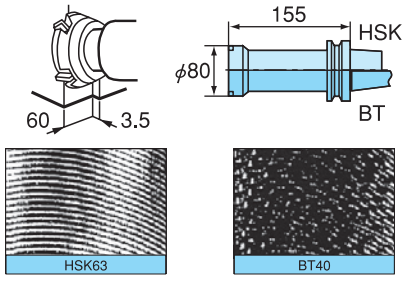

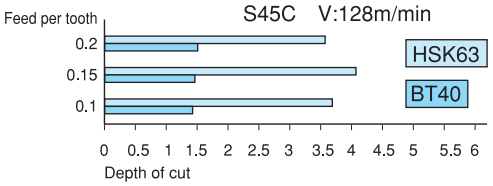

High repetitive accuracy

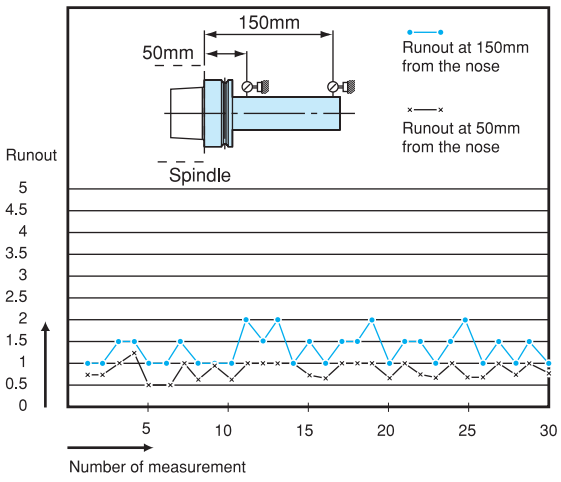

Excellent static rigidity against bending load

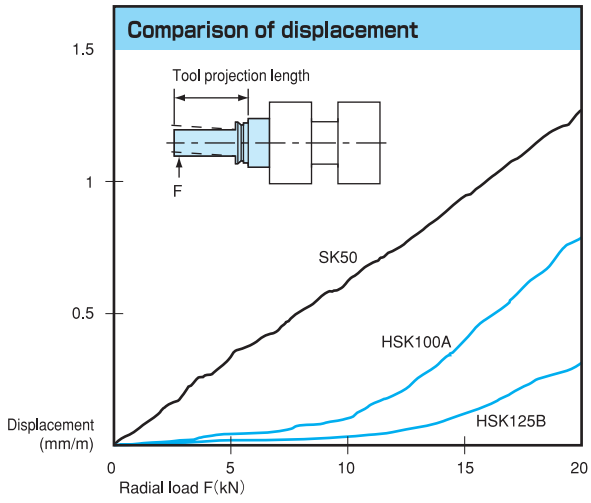

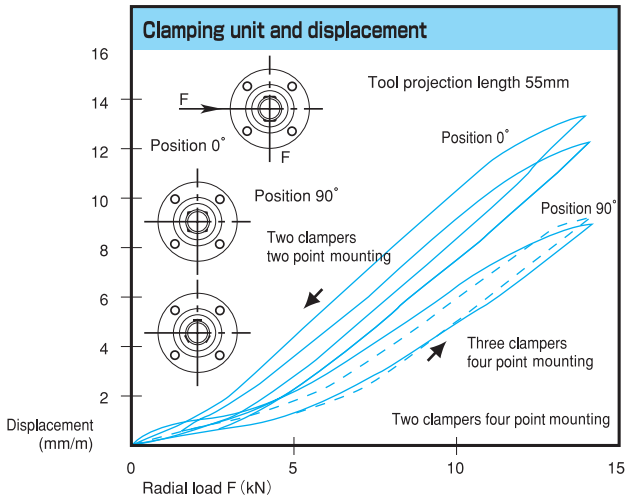

Inch to Metric (mm) → Inch × 25.4
Metric (mm) to Inch → Metric ÷ 25.4 or Metric × 0.03937

Special / Custom Sizes on request

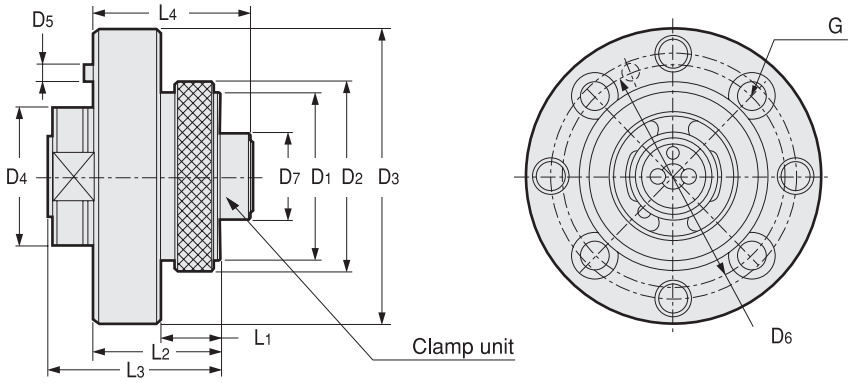

Code	Model	D1	D2	D3	D4 g6	D5	D6	D7	L1	L2	L3	L4	G	Attached Clamp unit	Adapted HSK shank
5500 55230005	**MN5523 -05 -J**	32	37	60	30	3.5	44	16.6	13	26	36	33.6	M5	KS32-05	HSK32C
5500 55230006	**-06 -J**	40	45	70	35	4	53	20.6	15	30	41	37.6	M6	KS40-06	HSK40C
5500 55230007	**-07 -J**	50	55	80	40	4	63	25.6	18	35	46	44.6	M6	KS50-07	HSK50C
5500 55230008	**-08 -J**	63	70	100	50	4	79	33.6	22	43	55	52.6	M8	KS63-08	HSK63C
5500 55230009	**-09 -J**	80	87	117	60	5	96	41.6	29	50	63	62.1	M8	KS80-09	HSK80C
5500 55230010	**-10 -J**	100	110	140	80	5	119	52.6	42	70	83	82	M10	KS100-10	HSK100C

For HSK・C type only.

Ordering Example

MN5523 - 05 - J

Size

Spindle Dimensions for MN5523・J

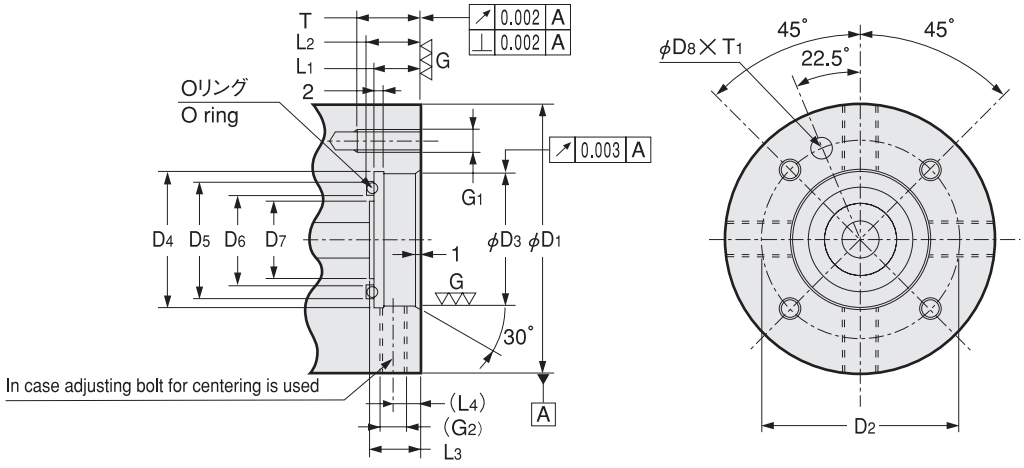

Size	D1	D2 ± 0.1	D3 H7	D4	D5	D6	D7	D8	O ring	L1 +0.2 +0.1	L2 +0.1 0	L3	(L4)	G1	(G2)	T	T1 +0.5 0
HSK32	60	44	30 $^{+0.021}_{0}$	30.5	26	20.3	—	4.5	P22	10	11.8	—	6	M5 × 0.8	M6 × 1	11	3
HSK40	70	53	35 $^{+0.025}_{0}$	35.5	32	23.6	20	5.0	P26	10	12.7	12	6	M6 × 1	M6 × 1	14	3.5
HSK50	80	63	40 $^{+0.025}_{0}$	40.5	37	28.6	23	5.0	P31	10	12.7	12	6	M6 × 1	M6 × 1	14	3.5
HSK63	100	79	50 $^{+0.025}_{0}$	50.5	37	28.6	—	5.0	P31	12	14.7	—	8	M8 × 1.25	M8 × 1	15	3.5
HSK80	117	96	60 $^{+0.030}_{0}$	60.5	50	41.6	28	6.0	P44	12	14.7	14	8	M8 × 1.25	M8 × 1	15	4.5
HSK100	140	119	80 $^{+0.030}_{0}$	80.5	56	47.6	—	6.0	P50	13	15.7	—	8	M10 × 1.5	M10 × 1	18	4.5

HSK

Tool Shank Dimensions For HSK

HSK Type A

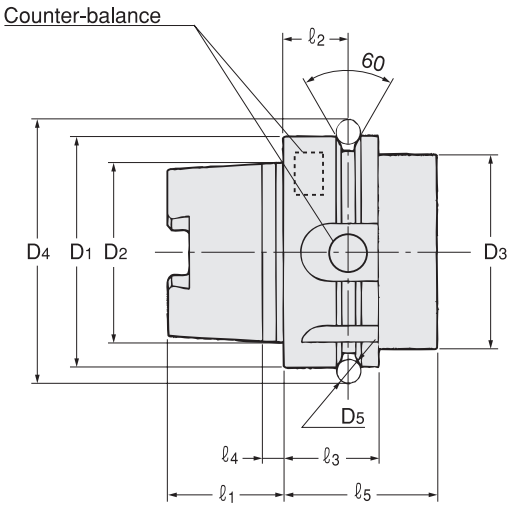

size	D1	D2	D3 (Max.)	D4	D5	ℓ1	ℓ2	ℓ3	ℓ4	ℓ5
HSK32A	32	24	26	37.0	4	16	16	20	3.2	35
HSK40A	40	30	34	45.0	4	20	16	20	4.0	35
HSK50A	50	38	42	59.3	7	25	18	26	5.0	42
HSK63A	63	48	53	72.3	7	32	18	26	6.3	42
HSK80A	80	60	68	88.8	7	40	18	26	8.0	42
HSK100A	100	75	85	109.75	7	50	20	29	10.0	45
HSK125A	125	95	111	134.75	7	63	20	29	12.5	45
HSK160A	160	120	144	169.75	7	80	22	31	16.0	47

1.NT's HSK Type A has neither manual clamping hole nor ID chip hole.
2.NT's HSK Type A has both notch and hole for counter-balancing.

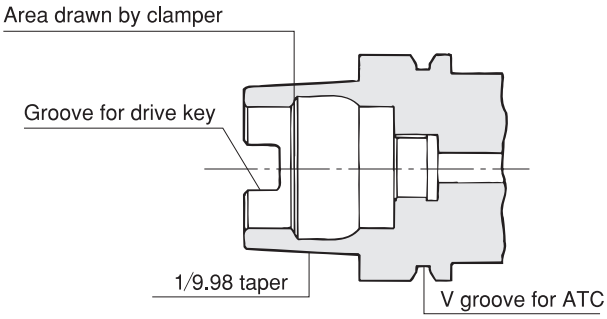

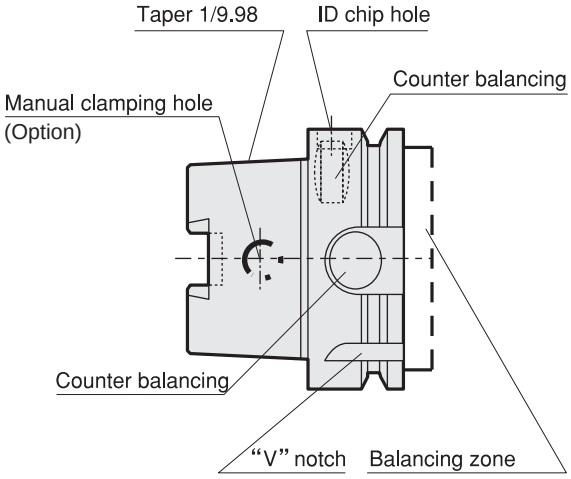

	DIN	ISO	NT
ID chip hole	Yes	No	No
"V" notch	Yes	Yes	Yes
Manual clamping hole	Yes	Yes	No
Counter balancing	—	Yes	Yes

Shapes and features

A and C types were unifiled as ISO and DIN standard.
6 types are shown. A and B types have no manual clamping hole.

Type A

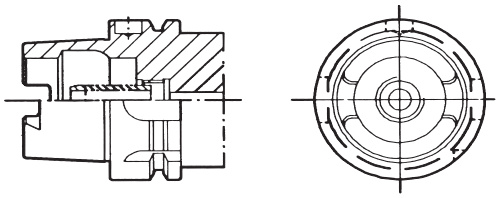

- Application：Machining centres.
- Centre through coolant hole.
- Torque transmission with drive keys on flange.
- U grooves for ATC positioning notch.
- Tool ID recess hole (option).

Type B

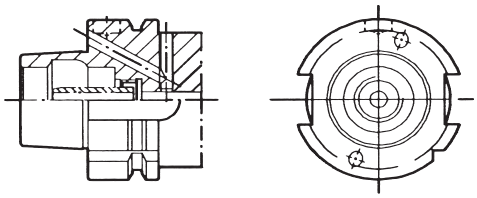

- Application：Machining centres, milling machines, lathes etc.
- Large flange diameter.
- Flange through coolant hole or centre through coolant hole.
- Torque transmission by U grooves on flange.
- Positioning notch.
- Tool ID recess hole (option).

Type C

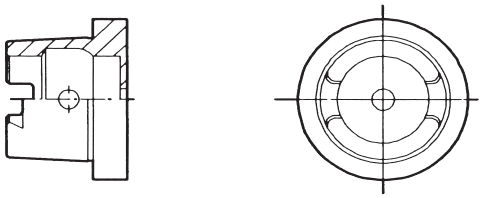

- Application：Transfer lines and special purpose machines without ATC.
- Centre through coolant hole.
- Torque transmission with drive keys on flange.

Type D

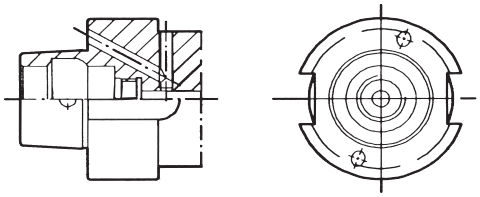

- Application：Transfer lines and special purpose machines without ATC.
- Large flange diameter.
- Flange through coolant hole.
- Torque transmission by U grooves on flange.

Type E

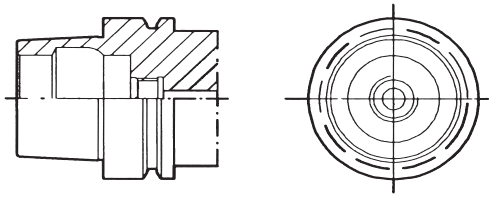

- Application：High speed machining centres.
- Complete symmetrical shape without drive keys.
- Torque transmission by friction.
- Centre through coolant hole. (Option)

Type F

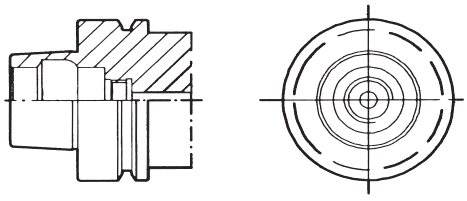

- Application：High speed machining centres.
- Large flange diameter.
- Centre through coolant hole. (Option)

What is HSK-T?

HSK-T interface was developed to maximize cutting ability of multi-tasking machines.
HSK-T interface became ISO standard (ISO121 164-3:2008) in 2008.

Feature

Compatible with HSK-A

HSK-T shank is compatible with HSK-A shank that is used for machining centers.

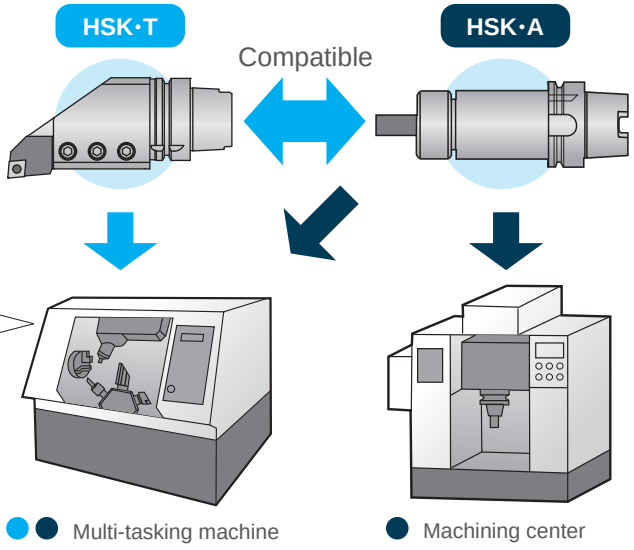

What is the multi-tasking machine?

Multi-tasking machine combines milling and turning processes, which were conventionally processed on multiple machines, onto one machine.

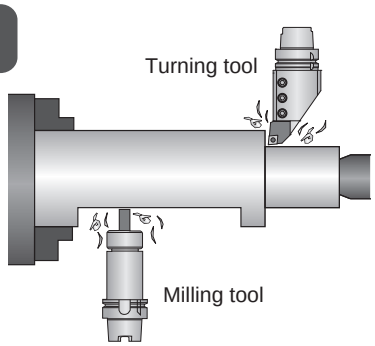

Increased cutting accuracy at turning process

HSK-T shank was designed to minimize the gap between the key and key way. Consequently, cutting edge height was sustained accurately and cutting accuracy was improved. Invariant cutting diameter was realized as well.

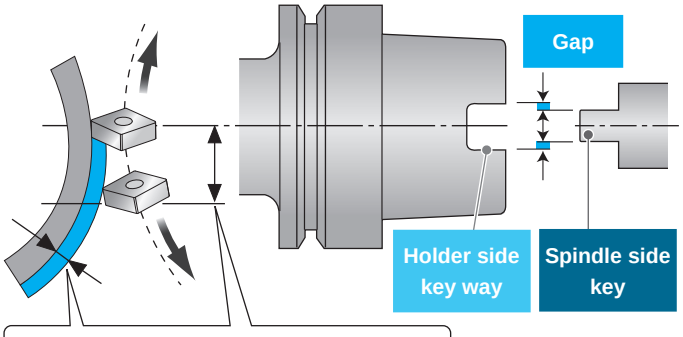

The gap causes variant cutting diameters.
Example at ϕ50
HSK63T : 3μm HSK63A : 14μm

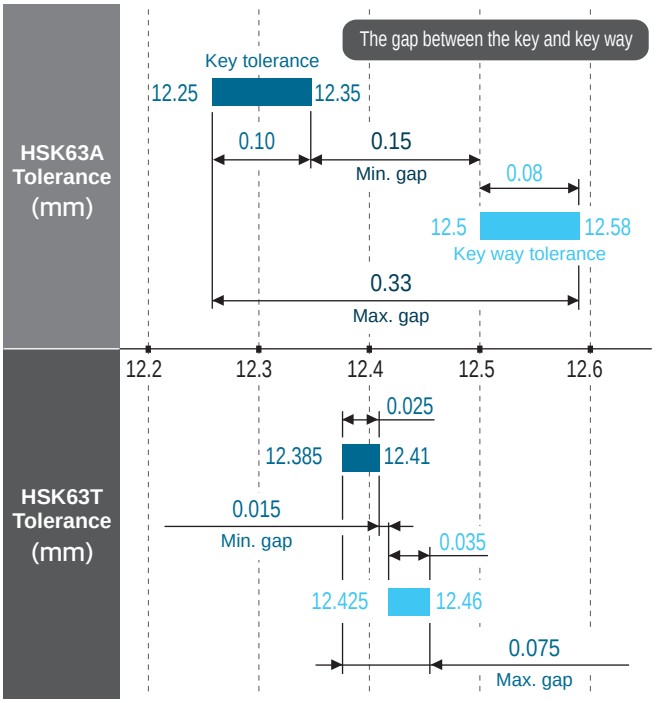

Inch to Metric (mm) → Inch × 25.4
Metric (mm) to Inch → Metric ÷ 25.4 or Metric × 0.03937

Special / Custom Sizes on request

SBV

HSK•T Turning Tools

● For External / Cut-off

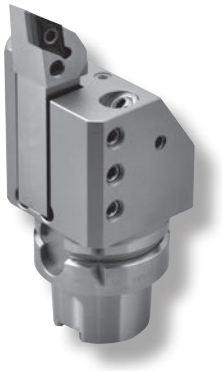

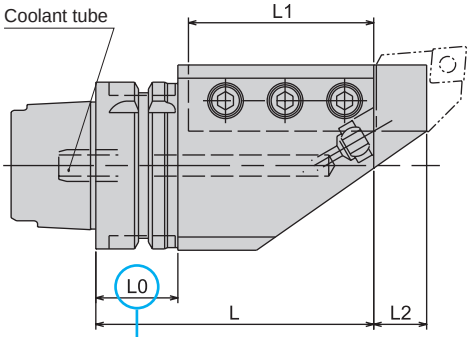

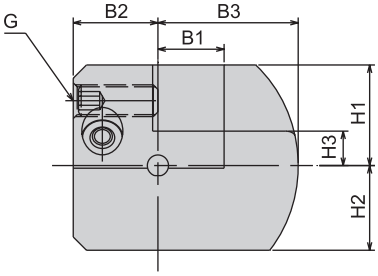

Right-hand drawing shown

⚠ Caution
★ Take caution against A.T.C. arm and tool magazine interference.

● Coolant tube is included.

Metric Sizes

Unit : Metric

Code	Model				L	L1	L2	B1	B2	B3	H1	H2	H3	L0	G	Kg
590004040095	**HSK50T**	**-SBV2020**	**R**	**- 95**	95	60	15	20	25	43.5	25	25	5	31	M10	2
590004041095			**L**	**- 95**	95	60	15	20	25	43.5	25	25	5	31	M10	2
590005040095	**HSK63T**	**-SBV2020**	**R**	**- 95**	95	60	15	20	32	43.5	33	32	13	32	M10	2.7
590005041095			**L**	**- 95**	95	60	15	20	32	43.5	33	32	13	32	M10	2.7
590005050105		**-SBV2525**	**R**	**-105**	105	70	20	25	32	45	30	30	5	32	M12	2.9
590005051105			**L**	**-105**	105	70	20	25	32	45	30	30	5	32	M12	2.9
590007050150	**HSK100T**	**-SBV2525**	**R**	**-150**	150	110	20	25	37	59	48	43	23	35	M12	8.5
590007051150			**L**	**-150**	150	110	20	25	37	59	48	43	23	35	M12	8.5
590007060150		**-SBV3232**	**R**	**-150**	150	110	20	32	40	68.5	45	43	15	35	M14	9
590007061150			**L**	**-150**	150	110	20	32	40	68.5	45	43	15	35	M14	9

1.Direction of coolant nozzle can be adjusted. (Coolant may not reach the cutting edge properly depending on the bit shape.)
2.Please shorten a square bit if necessary.
3.HSK-T type has no manual clamping hole and ID chip recess.

Ordering Example

HSK63T - SBV 2020 R - 95

- HSK63T: Shank size
- R: □ Left hand - L / □ Right hand - R
- 95: Projection length (L)

SBN

HSK•T Turning Tools

MORI SEIKI CO.,LTD granted NT TOOL a manufacturing and distribution license under the patent No.3720202 .

● For External / Facing



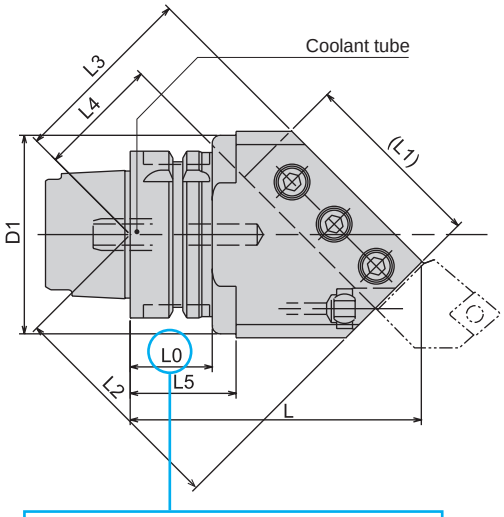

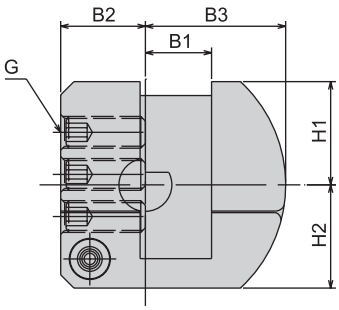

Right-hand drawing shown

Caution
★ Take caution against A.T.C. arm and tool magazine interference.

● Coolant tube is included.

Metric Sizes

Unit : Metric

Code	Model	L	(L1)	L2	L3	L4	L5	D1	B1	B2	B3	H1	H2	L0	G	Kg
590004240110	HSK50T -SBN2020 R -110	110	60	83.1	72.8	52.8	–	–	20	25	43.5	35	35	31	M10	2.4
590004241110	L -110	110	60	83.1	72.8	52.8	–	–	20	25	43.5	35	35	31	M10	2.4
590005240110	HSK63T -SBN2020 R -110	110	60	83.1	72.8	52.8	–	–	20	32	43.5	35	35	32	M10	2.9
590005241110	L -110	110	60	83.1	72.8	52.8	–	–	20	32	43.5	35	35	32	M10	2.9
590005250110	-SBN2525 R -110	110	70	85.2	70.8	45.8	40	90	25	32	53	39	39	32	M12	3.2
590005251110	L -110	110	70	85.2	70.8	45.8	40	90	25	32	53	39	39	32	M12	3.2
590007250135	HSK100T -SBN2525 R -135	135	70	102.9	88.5	63.5	–	–	25	32	59	43	43	35	M12	6.4
590007251135	L -135	135	70	102.9	88.5	63.5	–	–	25	32	59	43	43	35	M12	6.4
590007260140	-SBN3232 R -140	140	85	109.9	89	59	–	–	32	37	68.5	48	43	35	M14	7.2
590007261140	L -140	140	85	109.9	89	59	–	–	32	37	68.5	48	43	35	M14	7.2

1.Direction of coolant nozzle can be adjusted. (Coolant may not reach the cutting edge properly depending on the bit shape.)
2.Please shorten a square bit if necessary.
3.HSK-T type has no manual clamping hole and ID chip recess.

Ordering Example

HSK63T - SBN 2020 R - 110

- HSK63T: Shank size
- R: □ Left hand - L / □ Right hand - R
- 110: Projection length (L)

Inch to Metric (mm) → Inch × 25.4
Metric (mm) to Inch → Metric ÷ 25.4 or Metric × 0.03937

Special / Custom Sizes on request

SBH

HSK•T Turning Tools

● For Facing

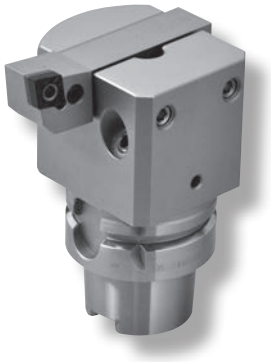

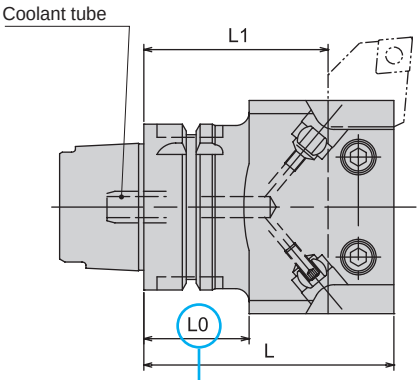

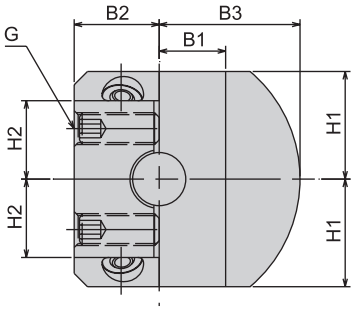

For both Right and Left-hand

⚠ Caution

★ Take caution against A.T.C. arm and tool magazine interference.

● Coolant tube is included.

Metric Sizes

Unit : Metric

Code	Model	L	L1	B1	B2	B3	H1	H2	L0	G	Kg
590004342090	**HSK50T -SBH2020 N - 90**	90	70	20	25	43.5	27.5	—	40	M10	1.8
590004342120	**N -120**	120	100	20	25	43.5	27.5	—	70	M10	2.3
590005342090	**HSK63T -SBH2020 N - 90**	90	70	20	32	43.5	30	—	40	M10	2.5
590005352090	**-SBH2525 N - 90**	90	65	25	32	53	40.5	29.5	40	M12	3.0
590005352120	**N -120**	120	95	25	32	53	40.5	29.5	70	M12	3.7
590007352105	**HSK100T -SBH2525 N -105**	105	80	25	32	59	48	37	35	M12	6.1
590007352150	**N -150**	150	125	25	32	59	48	37	35	M12	8.9
590007362105	**-SBH3232 N -105**	105	75	32	40	68.5	57	43	35	M14	7.4

1.Direction of coolant nozzle can be adjusted. (Coolant may not reach the cutting edge properly depending on the bit shape.)
2.Please shorten a square bit if necessary.
3.One plug screw for coolant nozzle (M5×15) is included.
4.HSK-T type has no manual clamping hole and ID chip recess.

Ordering Example

HSK63T - SBV 2020N - 90

HSK63T: Shank size
90: Projection length (L)

SBT

HSK•T Turning Tools

● For External / Facing



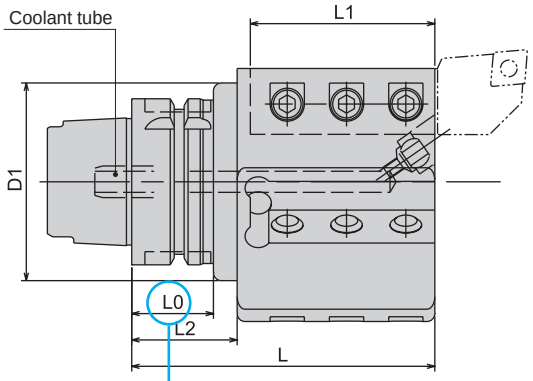

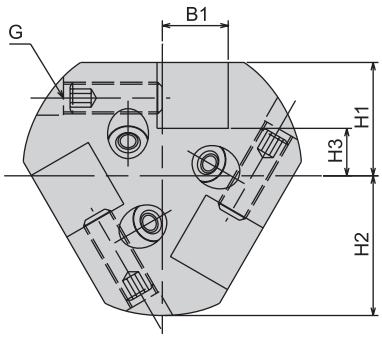

Right-hand drawing shown

⚠ Caution
★ Take caution against A.T.C. arm and tool magazine interference.

● Coolant tube is included.

Metric Sizes

Unit : Metric

Code	Model			L	L1	L2	D1	B1	H1	H2	H3	L0	G	Kg
590004140095	**HSK50T**	**-SBT2020**	**R - 95**	95	60	—	—	20	35	43.5	15	31	M10	2.3
590004141095			**L - 95**	95	60	—	—	20	35	43.5	15	31	M10	2.3
590005140095	**HSK63T**	**-SBT2020**	**R - 95**	95	60	—	—	20	35	43.5	15	32	M10	2.6
590005141095			**L - 95**	95	60	—	—	20	35	43.5	15	32	M10	2.6
590005150115		**-SBT2525**	**R -115**	115	70	40	90	25	43	53	18	32	M12	4.4
590005151115			**L -115**	115	70	40	90	25	43	53	18	32	M12	4.4
590007150150	**HSK100T**	**-SBT2525**	**R -150**	150	110	—	—	25	48	59	23	35	M12	8.9
590007151150			**L -150**	150	110	—	—	25	48	59	23	35	M12	8.9

1.Direction of coolant nozzle can be adjusted. (Coolant may not reach the cutting edge properly depending on the bit shape.)
2.Please shorten square bits if necessary.
3.Two plug screws for coolant nozzle (M5×15) are included.
4.HSK-T type has no manual clamping hole and ID chip recess.

Ordering Example

HSK63T - SBT 2020 R - 95

- HSK63T: Shank size
- R: □ Left hand - L / □ Right hand - R
- 95: Projection length (L)

Inch to Metric (mm) → Inch × 25.4
Metric (mm) to Inch → Metric ÷ 25.4 or Metric × 0.03937

Special / Custom Sizes on request

TSB

HSK•T Turning Tools

● For Boring bar



Type1

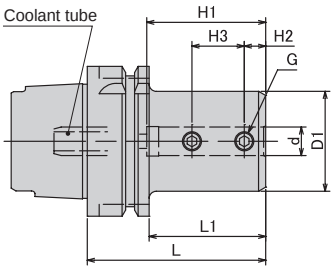

Type2

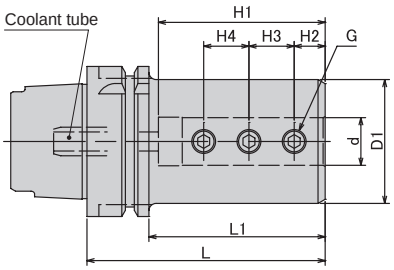

Type3

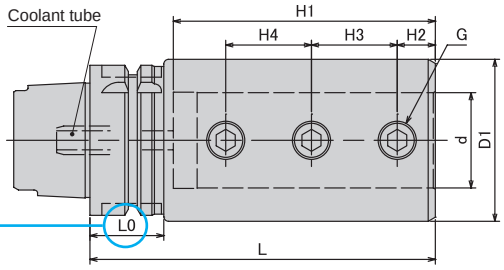

Type4

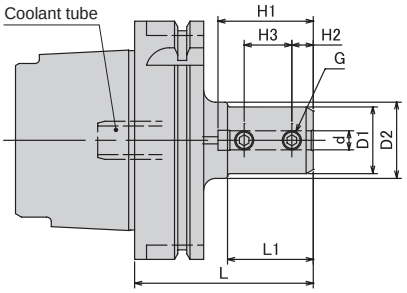

⚠ Caution
★ Take caution against A.T.C. arm and tool magazine interference.

● Coolant tube is included.

Metric Sizes

Unit : Metric

Code	Model	Type	d	L	L1	D1	D2	H1	H2	H3	H4	L0	G	Kg
591004008065	HSK50T -TSB8 - 65	1	8	65	39	28	—	40	9	20	—	—	M8	0.7
591004010070	-TSB10 - 70	1	10	70	44	35	—	45	9	22	—	—	M8	0.8
591004012075	-TSB12 - 75	1	12	75	49	42	—	50	9	22	—	—	M8	1
591004016095	-TSB16 - 95	2	16	95	69	48	—	70	14	18	18	—	M10	1.3
591004020095	-TSB20 - 95	3	20	95	—	52	—	70	14	18	18	31	M10	1.4
591004025110	-TSB25 -110	3	25	110	—	62	—	85	14	26	26	31	M12	2.1
591004032125	-TSB32 -125	3	32	125	—	62	—	100	14	30	30	31	M12	2.1
591005008065	HSK63T -TSB8 - 65	1	8	65	39	28	—	40	9	20	—	—	M8	0.9
591005010070	-TSB10 - 70	1	10	70	44	35	—	45	9	22	—	—	M8	1.1
591005012075	-TSB12 - 75	1	12	75	49	42	—	50	9	22	—	—	M8	1.2
591005016100	-TSB16 -100	2	16	100	74	48	—	70	14	18	18	—	M10	1.7
591005020100	-TSB20 -100	2	20	100	74	52	—	70	14	18	18	—	M10	1.8
591005025115	-TSB25 -115	2	25	115	89	62	—	85	14	26	26	—	M12	2.5
591005032130	-TSB32 -130	2	32	130	104	62	—	100	14	30	30	—	M12	2.6
591005040145	-TSB40 -145	3	40	145	—	68	—	115	16	36	36	32	M16	2.9
591007008075	HSK100T -TSB8 - 75	4	8	75	36	28	32	40	9	20	—	—	M8	2.4
591007010080	-TSB10 - 80	1	10	80	51	35	—	45	9	22	—	—	M8	2.5
591007012085	-TSB12 - 85	1	12	85	56	42	—	50	9	22	—	—	M8	2.7
591007016105	-TSB16 -105	2	16	105	76	48	—	70	14	18	18	—	M10	3.1
591007020105	-TSB20 -105	2	20	105	76	52	—	70	14	18	18	—	M10	3.2
591007025120	-TSB25 -120	2	25	120	91	62	—	85	14	26	26	—	M12	4
591007032135	-TSB32 -135	2	32	135	106	72	—	100	14	30	30	—	M12	4.9
591007040150	-TSB40 -150	2	40	150	121	82	—	115	16	36	36	—	M16	6
591007050180	-TSB50 -180	2	50	180	151	92	—	145	18	38	38	—	M16	7.8

1.Various sizes of boring bar can be clamped by using the coolant/size reduction sleeve, TSS with TSB40.
2.HSK-T type has no manual clamping hole and ID chip recess.

Ordering Example

HSK63T - TSB 10 - 70
Shank size — I.D. (d) — Projection length (L)

Inch to Metric (mm) → Inch × 25.4
Metric (mm) to Inch → Metric ÷ 25.4 or Metric × 0.03937

Special / Custom Sizes on request

TSB Accessories



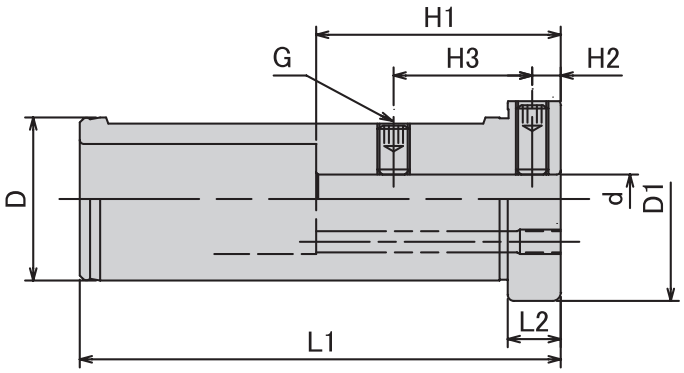

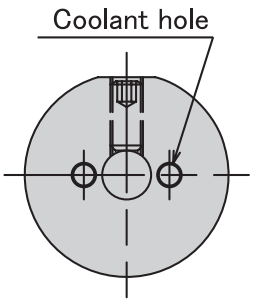

Coolant/Size Reduction Sleeve for TSB40 TSS

Metric Sizes

Unit : Metric

Code	Model	d	L1	L2	D	D1	H1	H2	H3	G	Kg
591400004008	**TSS 40 - 8**	8	118	13	40	50	50	7	34	M8	1
591400004010	**-10**	10	118	13	40	50	50	7	34	M8	1
591400004012	**-12**	12	118	13	40	50	60	7	34	M8	1
591400004016	**-16**	16	118	13	40	50	70	7	34	M8	0.9

1.TSS can be used for TSB40 only.
2.For coolant use, plug one of two coolant holes with plug screw.
3.One plug screw for coolant hole (M6×10) is included.
4.Various sizes of boring bar can be clamped by using the coolant/size reduction sleeve, TSS with TSB40.

Ordering Example

TSS 40 - 10
I.D. (d) — Projection length (L)

Inch to Metric (mm) → Inch × 25.4
Metric (mm) to Inch → Metric ÷ 25.4 or Metric × 0.03937

Special / Custom Sizes on request

TSD

HSK•T Turning Tools

● For Drill



Type1

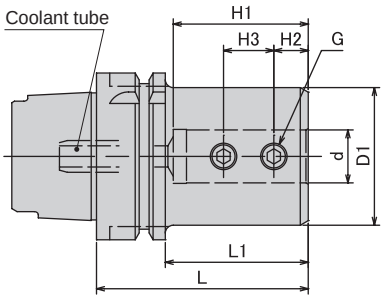

Type2

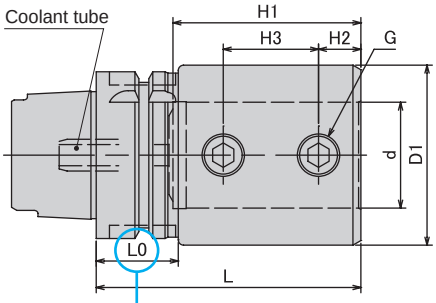

Caution
★ Take caution against A.T.C. arm and tool magazine interference.

● Coolant tube is included.

Metric Sizes

Unit : Metric

Code	Model	Type	d	L	L1	D1	H1	H2	H3	L0	G	Kg
591004116075	**HSK50T -TSD16 - 75**	1	16	75	49	48	49	14	18	—	M10	1.1
591004120080	**-TSD20 - 80**	2	20	80	—	52	51	14	18	31	M10	1.2
591004125085	**-TSD25 - 85**	2	25	85	—	62	57	14	26	31	M12	1.6
591004132090	**-TSD32 - 90**	2	32	90	—	62	61	14	30	31	M12	1.6
591005116075	**HSK63T -TSD16 - 75**	1	16	75	49	48	49	14	18	—	M10	1.4
591005120080	**-TSD20 - 80**	1	20	80	54	52	51	14	18	—	M10	1.5
591005125085	**-TSD25 - 85**	1	25	85	59	62	57	14	26	—	M12	1.9
591005132090	**-TSD32 - 90**	1	32	90	64	62	61	14	30	—	M12	1.9
591005140100	**-TSD40 -100**	2	40	100	—	68	71	16	36	32	M16	2.1
591007116085	**HSK100T -TSD16 - 85**	1	16	85	56	48	49	14	18	—	M10	2.9
591007120085	**-TSD20 - 85**	1	20	85	56	52	51	14	18	—	M10	2.9
591007125090	**-TSD25 - 90**	1	25	90	61	62	57	14	26	—	M12	3.3
591007132095	**-TSD32 - 95**	1	32	95	66	72	61	14	30	—	M12	3.9
591007140105	**-TSD40 -105**	1	40	105	76	82	71	16	36	—	M16	4.6
591007150115	**-TSD50 -115**	1	50	115	86	92	81	18	38	—	M16	5.3

1.Cutting tool may not be clamped depending on the position and/or shape of flat on the cutting tool shank. Please check dimension of the cutting tool including location for setscrews.
2.HSK-T type has no manual clamping hole and ID chip recess.

Ordering Example

HSK63T - TSD 25 - 85
Shank size / I.D. (d) / Projection length (L)

Inch to Metric (mm) → Inch × 25.4
Metric (mm) to Inch → Metric ÷ 25.4 or Metric × 0.03937

Special / Custom Sizes on request

MEMO

UTS

UTS TOOLING SYSTEM

When placing an order, please specify high or low pressure.

Please check your machine spindle type.

For high pressure type, please add (–H) on end of the description.

CT·S

Super tite-lock Milling Chuck

● Slim design milling chuck. Specially designed slits enable heavy endmilling.

Type1

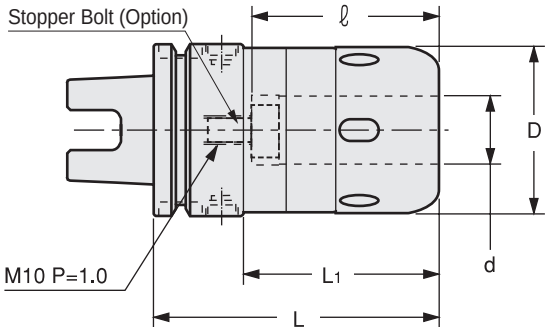

Type2

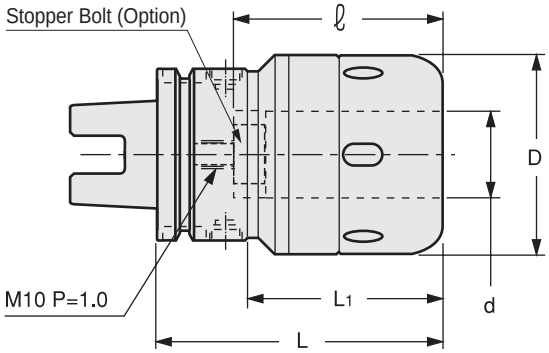

Caution

Please rotate the clamping ring counterclockwise more than 360 degrees after a cutting tool is removed.

Metric Sizes

Unit : Metric

Code	Model	Type	d	D	L	L1	ℓ	kg	Spanner
1360 01116090	UTS5040 -CT16S -90-H ＊ 1	1	16	45	90	60	60	1.1	HS-1-16
1360 01120090	UTS5040 -CT20S -90-H ＊ 5	2	20	52	90	60	60	1.3	HS-2-20
1360 01120105	-105-H ＊ 1	2	20	52	105	75	75	1.5	
1360 01125105	UTS5040 -CT25S -105-H ＊ 1	2	25	61	105	75	75	1.8	HS-2.5-25
1360 0 ※ 216090	UTS6350 -CT16S -90	1	16	45	90	57	65	1.5	HS-1-16
1360 0 ※ 220090	UTS6350 -CT20S -90 ＊ 5	1	20	52	90	57	65	1.6	HS-2-20
1360 0 ※ 220105	-105	1	20	52	105	72	75	1.8	
1360 0 ※ 220135	-135	1	20	52	135	102	80	2.2	
1360 0 ※ 225105	UTS6350 -CT25S -105	1	25	61	105	72	75	2.1	HS-2.5-25
1360 0 ※ 225120	-120	1	25	61	120	87	75	2.5	
1360 0 ※ 225135	-135	1	25	61	135	102	80	2.8	
1360 0 ※ 232105	UTS6350 -CT32S -105 ＊ 2	2	32	73	105	72	80	2.5	HS-3-32
1360 0 ※ 232120	-120 ＊ 2	2	32	73	120	87	90	2.8	
1360 0 ※ 232150	-150 ＊ 1	2	32	73	150	117	120	3.3	
1360 0 ※ 316090	UTS10080 -CT16S -90	1	16	45	90	56	65	3.0	HS-1-16
1360 0 ※ 316105	-105	1	16	45	105	71	65	3.4	
1360 0 ※ 320090	UTS10080 -CT20S -90 ＊ 5	1	20	52	90	56	65	3.2	HS-2-20
1360 0 ※ 320105	-105 ＊ 3	1	20	52	105	71	70	3.5	
1360 0 ※ 320120	-120	1	20	52	120	86	80	3.9	
1360 0 ※ 320135	-135	1	20	52	135	101	80	4.2	
1360 0 ※ 320150	-150	1	20	52	150	116	80	4.6	
1360 0 ※ 325105	UTS10080 -CT25S -105 ＊ 4	1	25	61	105	71	70	3.8	HS-2.5-25
1360 0 ※ 325120	-120	1	25	61	120	86	80	4.1	
1360 0 ※ 325135	-135	1	25	61	135	101	80	4.5	
1360 0 ※ 325150	-150	1	25	61	150	116	80	5.0	
1360 0 ※ 332105	UTS10080 -CT32S -105 ＊ 5	1	32	73	105	71	70	4.2	HS-3-32
1360 0 ※ 332120	-120 ＊ 2	1	32	73	120	86	85	4.6	
1360 0 ※ 332135	-135 ＊ 1	1	32	73	135	101	100	5.0	
1360 0 ※ 332150	-150 ＊ 1	1	32	73	150	116	115	5.4	
1360 0 ※ 342120	UTS10080 -CT42S -120 ＊ 5	1	42	88	120	86	85	5.4	HS-4-42
1360 0 ※ 342135	-135 ＊ 5	1	42	88	135	101	100	6.0	
1360 0 ※ 342150	-150 ＊ 5	1	42	88	150	116	110	6.6	
1360 0 ※ 342165	-165 ＊ 1	1	42	88	165	131	120	7.2	

When placing an order, please specify high or low pressure. For high pressure type, please add (–H) on end of the description.

1.When ordering, indicate number of spanners required. “No charge” spanners are limited to number of milling chucks on order.
2.Tolerance of cutting tool shank must be h7.
3.UTS5040 is available in high pressure only.

Inch to Metric (mm) → Inch × 25.4
Metric (mm) to Inch → Metric ÷ 25.4 or Metric × 0.03937

Special / Custom Sizes on request

Accessories

Models with ＊1 - ＊5 cannot be used with some accessories due to short ℓ length.

	Stopper Bolt	Straight Collet		Morse Taper Adapter		Jacobs Adapter	
	BL (P.389)	MC (P.066)	MCA (P.067)	MA (P.068)	MAB (P.068)	JA (P.069)	JAB (P.069)
＊1	BL16 only	Yes	No	Yes	Yes	Yes	Yes
＊2	BL16 only	Yes	No	No	Yes	No	Yes
＊3	BL16 only	Yes	Yes	Yes	No	Yes	No
＊4	BL16 only	Yes	Yes	No	No	Yes	No
＊5	BL16 only	Yes	No	No	No	No	No

Min. chucking length

Without MC collet

I.D.of Milling Chuck	Min. chucking length
16、20	40
25、32、42	50

With MC collet

Collet I.D.	Min. chucking length	
	MC	MC-C、MC-OH
6、8	30	30
10、12	40	40
16、20	45	45
25	50	50
32	50	60

Spanner

P. 069



Ordering Example

Low pressure type

0 ~ 1.0MPa (UTS10080 : 0 ~ 2.0MPa)

UTS6350 - CT 32 S - 105

Shank size | I.D. (d) | Projection length (L)

Ordering Example

High pressure type

1.1 ~ 7.0MPa (UTS10080 : 2.1 ~ 7.0MPa)

UTS6350 - CT 32 S - 105 - H

Shank size | I.D. (d) | Projection length (L) | High pressure type

CT·S-E

Super Tite-Lock Milling Chuck (High-Balanced Type)

● Slim design milling chuck. Specially designed slits enables heavy endmilling. (High balanced type for higher RPM)

Type1

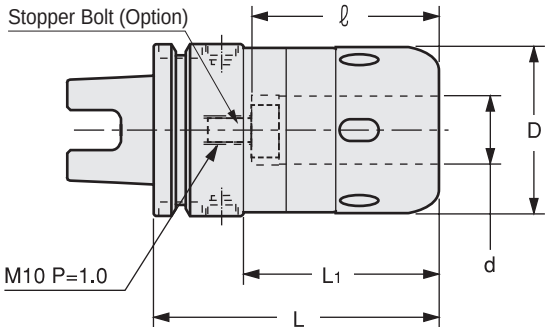

Type2

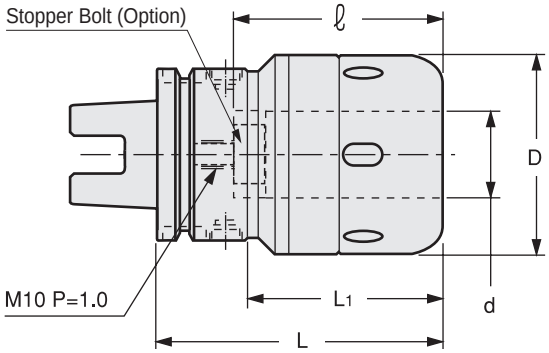

Caution

Please rotate the clamping ring counterclockwise more than 360 degrees after a cutting tool is removed.

Metric Sizes

Unit : Metric

Code	Model	Type	d	D	L	L1	ℓ	kg	Spanner
1360 21116090	UTS5040 -CT16S -90E-H ＊ 1	1	16	45	90	60	60	1.1	HS-1-16
1360 21120090	UTS5040 -CT20S -90E-H ＊ 5	2	20	52	90	60	60	1.3	HS-2-20
1360 21120105	-105E-H ＊ 1	2	20	52	105	75	75	1.5	
1360 21125105	UTS5040 -CT25S -105E-H ＊ 1	2	25	61	105	75	75	1.8	HS-2.5-25
1360 2 ※ 216090	UTS6350 -CT16S -90E	1	16	45	90	57	65	1.4	HS-1-16
1360 2 ※ 220090	UTS6350 -CT20S -90E ＊ 5	1	20	52	90	57	65	1.6	HS-2-20
1360 2 ※ 220105	-105E	1	20	52	105	72	75	1.8	
1360 2 ※ 220135	-135E	1	20	52	135	102	80	2.3	
1360 2 ※ 225105	UTS6350 -CT25S -105E	1	25	61	105	72	75	2.1	HS-2.5-25
1360 2 ※ 225120	-120E	1	25	61	120	87	75	2.5	
1360 2 ※ 225135	-135E	1	25	61	135	102	80	2.8	
1360 2 ※ 232105	UTS6350 -CT32S -105E ＊ 2	2	32	73	105	72	80	2.5	HS-3-32
1360 2 ※ 232120	-120E ＊ 2	2	32	73	120	87	90	2.8	
1360 2 ※ 232150	-150E ＊ 1	2	32	73	150	117	120	3.3	
1360 2 ※ 316090	UTS10080 -CT16S -90E	1	16	45	90	56	65	2.9	HS-1-16
1360 2 ※ 316105	-105E	1	16	45	105	71	65	3.1	
1360 2 ※ 320090	UTS10080 -CT20S -90E ＊ 5	1	20	52	90	56	65	3.1	HS-2-20
1360 2 ※ 320105	-105E ＊ 3	1	20	52	105	71	70	3.3	
1360 2 ※ 320120	-120E	1	20	52	120	86	80	3.9	
1360 2 ※ 320135	-135E	1	20	52	135	101	80	4.2	
1360 2 ※ 320150	-150E	1	20	52	150	116	80	4.0	
1360 2 ※ 325105	UTS10080 -CT25S -105E ＊ 4	1	25	61	105	71	70	3.6	HS-2.5-25
1360 2 ※ 325120	-120E	1	25	61	120	86	80	3.9	
1360 2 ※ 325135	-135E	1	25	61	135	101	80	4.3	
1360 2 ※ 325150	-150E	1	25	61	150	116	80	4.6	
1360 2 ※ 332105	UTS10080 -CT32S -105E ＊ 5	1	32	73	105	71	70	4.1	HS-3-32
1360 2 ※ 332120	-120E ＊ 2	1	32	73	120	86	85	4.5	
1360 2 ※ 332135	-135E ＊ 1	1	32	73	135	101	100	5.0	
1360 2 ※ 332150	-150E ＊ 1	1	32	73	150	116	115	5.3	
1360 2 ※ 342120	UTS10080 -CT42S -120E ＊ 5	1	42	88	120	86	85	5.4	HS-4-42
1360 2 ※ 342135	-135E ＊ 5	1	42	88	135	101	100	5.9	
1360 2 ※ 342150	-150E ＊ 5	1	42	88	150	116	110	6.5	
1360 2 ※ 342165	-165E ＊ 1	1	42	88	165	131	120	7.1	

When placing an order, please specify high or low pressure. For high pressure type, please add (–H) on end of the description.

1.When ordering, indicate number of spanners required. “No charge” spanners are limited to number of milling chucks on order.
2.Tolerance of cutting tool shank must be h7.
3.UTS5040 is available in high pressure only.

Inch to Metric (mm) → Inch × 25.4
Metric (mm) to Inch → Metric ÷ 25.4 or Metric × 0.03937

Special / Custom Sizes on request

Accessories

Models with ＊1 - ＊5 cannot be used with some accessories due to short ℓ length.

	Stopper Bolt	Straight Collet		Morse Taper Adapter		Jacobs Adapter	
	BL (P.389)	MC (P.066)	MCA (P.067)	MA (P.068)	MAB (P.068)	JA (P.069)	JAB (P.069)
＊1	BL16 only	Yes	No	Yes	Yes	Yes	Yes
＊2	BL16 only	Yes	No	No	Yes	No	Yes
＊3	BL16 only	Yes	Yes	Yes	No	Yes	No
＊4	BL16 only	Yes	Yes	No	No	Yes	No
＊5	BL16 only	Yes	No	No	No	No	No

Min. chucking length

Without MC collet

I.D.of Milling Chuck	Min. chucking length
16、20	40
25、32、42	50

With MC collet

Collet I.D.	Min. chucking length	
	MC	MC-C、MC-OH
6、8	30	30
10、12	40	40
16、20	45	45
25	50	50
32	50	60

Spanner

P. 069



Ordering Example

Low pressure type

0 ~ 1.0MPa (UTS10080 : 0 ~ 2.0MPa)

UTS6350	-	CT	32	S	-	105	E
Shank size			I.D. (d)			Projection length (L)	

Ordering Example

High pressure type

1.1 ~ 7.0MPa (UTS10080 : 2.1 ~ 7.0MPa)

UTS6350	-	CT	32	S	-	105	E	-	H
Shank size			I.D. (d)			Projection length (L)			High pressure type

CT • A

Tite-Lock Milling Chuck

● Slim design milling chuck. Clicking sound tells completion of clamping.

Type1

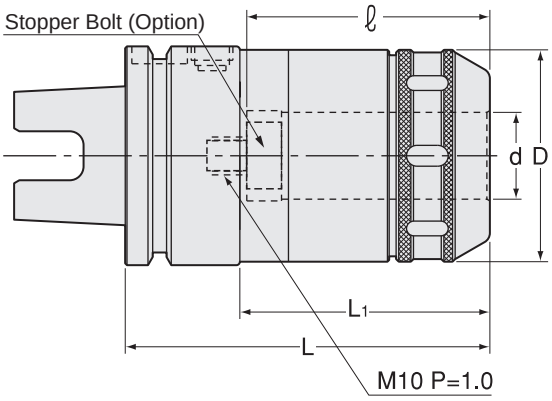

Type2

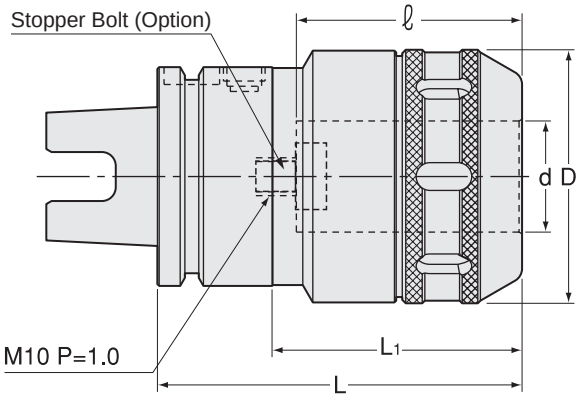

Caution

Please rotate the clamping ring counterclockwise more than 360 degrees after a cutting tool is removed.

Metric Sizes

Unit : Metric

Code	Model			Type	d	D	L	L1	ℓ	kg	Spanner
1280 01116090	**UTS5040**	**-CT16A**	**90-H ＊ 1**	1	16	45	90	60	60	1.1	HS-1-16
1280 01120105	**UTS5040**	**-CT20A**	**105-H ＊ 1**	2	20	52	105	75	75		HS-2-20
1280 01125105	**UTS5040**	**-CT25A**	**105-H ＊ 1**	2	25	61	105	75	75	1.7	HS-2.5-25
1280 0 ※ 216090	**UTS6350**	**-CT16A**	**-90**	1	16	45	90	57	65		HS-1-16
1280 0 ※ 220105	**UTS6350**	**-CT20A**	**-105**	1	20	52	105	72	75	1.7	HS-2-20
1280 0 ※ 220135			**-135**	1	20	52	135	102	80		
1280 0 ※ 225105	**UTS6350**	**-CT25A**	**-105**	1	25	61	105	72	75	2.1	HS-2.5-25
1280 0 ※ 225135			**-135**	1	25	61	135	102	80		
1280 0 ※ 232120	**UTS6350**	**-CT32A**	**-120 ＊ 2**	2	32	73	120	87	90	2.7	HS-3-32
1280 0 ※ 232150			**-150 ＊ 1**	2	32	73	150	117	120		
1280 0 ※ 316090	**UTS10080**	**-CT16A**	**-90**	1	16	45	90	56	65		HS-1-16
1280 0 ※ 316105			**-105**	1	16	45	105	71	65		
1280 0 ※ 320105	**UTS10080**	**-CT20A**	**-105 ＊ 3**	1	20	52	105	71	70		HS-2-20
1280 0 ※ 320135			**-135**	1	20	52	135	101	80		
1280 0 ※ 320150			**-150**	1	20	52	150	116	80		
1280 0 ※ 325105	**UTS10080**	**-CT25A**	**-105 ＊ 4**	1	25	61	105	71	70		HS-2.5-25
1280 0 ※ 325135			**-135**	1	25	61	135	101	80		
1280 0 ※ 325150			**-150**	1	25	61	150	116	80		
1280 0 ※ 332105	**UTS10080**	**-CT32A**	**-105 ＊ 5**	1	32	73	105	71	70		HS-3-32
1280 0 ※ 332135			**-135 ＊ 1**	1	32	73	135	101	100	3.9	
1280 0 ※ 332150			**-150 ＊ 1**	1	32	73	150	116	115		
1280 0 ※ 342135	**UTS10080**	**-CT42A**	**-135 ＊ 5**	1	42	88	135	101	100		HS-4-42
1280 0 ※ 342150			**-150 ＊ 5**	1	42	88	150	116	110		
1280 0 ※ 342165			**-165 ＊ 1**	1	42	88	165	131	120		

When placing an order, please specify high or low pressure. For high pressure type, please add (–H) on end of the description.

1.When ordering, indicate number of spanners required. “No charge” spanners are limited to number of milling chucks on order.
2.Tolerance of cutting tool shank must be h7.
3.UTS5040 is available in high pressure only.

Inch to Metric (mm) → Inch × 25.4
Metric (mm) to Inch → Metric ÷ 25.4 or Metric × 0.03937

Special / Custom Sizes on request

Accessories

Models with ＊1 - ＊5 cannot be used with some accessories due to short ℓ length.

	Stopper Bolt	Straight Collet		Morse Taper Adapter		Jacobs Adapter	
	BL (P.389)	MC (P.066)	MCA (P.067)	MA (P.068)	MAB (P.068)	JA (P.069)	JAB (P.069)
＊1	BL16 only	Yes	No	Yes	Yes	Yes	Yes
＊2	BL16 only	Yes	No	No	Yes	No	Yes
＊3	BL16 only	Yes	Yes	Yes	No	Yes	No
＊4	BL16 only	Yes	Yes	No	No	Yes	No
＊5	BL16 only	Yes	No	No	No	No	No

Min. chucking length

Without MC collet

I.D.of Milling Chuck	Min. chucking length
16	40
20、25	45
32、42	60

With MC collet

Collet I.D.	Min. chucking length
6、8	30
10、12	40
16、20	45
25	55
32	60

Spanner

P. 069



Ordering Example

Low pressure type

0 ~ 1.0MPa (UTS10080 : 0 ~ 2.0MPa)

UTS6350 - CT 32 A - 120

Shank size | I.D. (d) | Projection length (L)

Ordering Example

High pressure type

1.1 ~ 7.0MPa (UTS10080 : 2.1 ~ 7.0MPa)

UTS6350 - CT 32 A - 120 - H

Shank size | I.D. (d) | Projection length (L) | High pressure type

Stopper Bolt (for UTS) BL

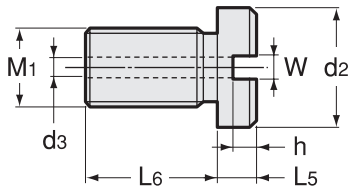

Code	Model	M1 P=1.0	L5	L6	W	h	d2	d3	Chucks
0711 040016 ※※	**BL 16 -L5**	10	5、15、25	14	5	3.5	15	4.5	CT16 ～ 42

Choose right L5 dimension by checking minimum insertion length and shank I.D. depth.

Ordering Example

BL16 - 15

Size | L5

HDC·A

High-Precision Collet Holder

● Suitable for drilling, reaming and finish endmilling.

Preset screw (Included)

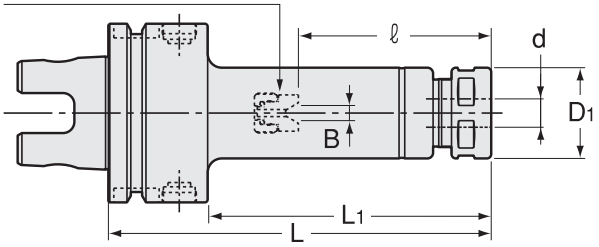

Unit : Metric

Code	Model	d	L	L1	B	ℓ	D1	Nut	kg	Collet	Spanner
1260 11107075	**UTS5040 -HDC07A -75-H**	0.5 ~ 7.0	75	45	0 ~ 4	22 ~ 38	23	HDP-07A		FDC-07	S-0
1260 11107090	**-90-H**	0.5 ~ 7.0	90	60	0 ~ 4	22 ~ 45	23	HDP-07A	0.6		
1260 11107120	**-120-H**	0.5 ~ 7.0	120	90	0 ~ 4	22 ~ 45	23	HDP-07A	0.7		
1260 11109075	**UTS5040 -HDC09A -75-H**	2.5 ~ 9.0	75	45	0 ~ 4	27 ~ 31	26	HDP-09	0.7	FDC-09	S-1L
1260 11109090	**-90-H**	2.5 ~ 9.0	90	60	0 ~ 4	27 ~ 47	26	HDP-09	0.7		
1260 11109120	**-120-H**	2.5 ~ 9.0	120	90	0 ~ 4	27 ~ 61	26	HDP-09	0.8		
1260 11112090	**UTS5040 -HDC12A -90-H**	2.5 ~ 12.0	90	60	0 ~ 5	33 ~ 42	32	HDP-12	0.8	FDC-12	S-3L
1260 11112120	**-120-H**	2.5 ~ 12.0	120	90	0 ~ 5	33 ~ 69	32	HDP-12	0.9		
1260 11112150	**-150-H**	2.5 ~ 12.0	150	120	0 ~ 5	33 ~ 71	32	HDP-12			
1260 11116090	**UTS5040 -HDC16A -90-H**	3.5 ~ 16.0	90	60	0 ~ 6	38 ~ 50	36	HDP-16	0.8	FDC-16	S-4L
1260 11116120	**-120-H**	3.5 ~ 16.0	120	90	0 ~ 6	38 ~ 65	36	HDP-16	1.0		
1260 11116150	**-150-H**	3.5 ~ 16.0	150	120	0 ~ 6	38 ~ 82	36	HDP-16			
1260 11122090	**UTS5040 -HDC22A -90-H**	3.5 ~ 22.0	90	60	–	60	46	HDP-22		FDC-22	S-5L
1260 11122120	**-120-H**	3.5 ~ 22.0	120	90	0 ~ 8	47 ~ 63	46	HDP-22			
1260 11122150	**-150-H**	3.5 ~ 22.0	150	120	0 ~ 8	47 ~ 93	46	HDP-22			
1260 1 ※ 207075	**UTS6350 -HDC07A -75**	0.5 ~ 7.0	75	42	0 ~ 4	22 ~ 34	23	HDP-07A	1.0	FDC-07	S-0
1260 1 ※ 207090	**-90**	0.5 ~ 7.0	90	57	0 ~ 4	22 ~ 45	23	HDP-07A	1.0		
1260 1 ※ 207120	**-120**	0.5 ~ 7.0	120	87	0 ~ 4	22 ~ 45	23	HDP-07A	1.0		
1260 1 ※ 209075	**UTS6350 -HDC09A -75**	2.5 ~ 9.0	75	42	0 ~ 4	27 ~ 34	26	HDP-09		FDC-09	S-1L
1260 1 ※ 209090	**-90**	2.5 ~ 9.0	90	57	0 ~ 4	27 ~ 42	26	HDP-09	1.1		
1260 1 ※ 209120	**-120**	2.5 ~ 9.0	120	87	0 ~ 4	27 ~ 57	26	HDP-09	1.2		
1260 1 ※ 212090	**UTS6350 -HDC12A -90**	2.5 ~ 12.0	90	57	0 ~ 5	33 ~ 47	32	HDP-12	1.1	FDC-12	S-3L
1260 1 ※ 212120	**-120**	2.5 ~ 12.0	120	87	0 ~ 5	33 ~ 69	32	HDP-12	1.3		
1260 1 ※ 212150	**-150**	2.5 ~ 12.0	150	117	0 ~ 5	33 ~ 69	32	HDP-12	1.4		
1260 1 ※ 216090	**UTS6350 -HDC16A -90**	3.5 ~ 16.0	90	57	0 ~ 6	38 ~ 48	36	HDP-16	1.2	FDC-16	S-4L
1260 1 ※ 216120	**-120**	3.5 ~ 16.0	120	87	0 ~ 6	38 ~ 62	36	HDP-16	1.4		
1260 1 ※ 216150	**-150**	3.5 ~ 16.0	150	117	0 ~ 6	38 ~ 62	36	HDP-16	1.5		
1260 1 ※ 222090	**UTS6350 -HDC22A -90**	3.5 ~ 22.0	90	57	–	63	46	HDP-22	1.3	FDC-22	S-5L
1260 1 ※ 222120	**-120**	3.5 ~ 22.0	120	87	0 ~ 8	47 ~ 63	46	HDP-22	1.6		
1260 1 ※ 222150	**-150**	3.5 ~ 22.0	150	117	0 ~ 8	47 ~ 93	46	HDP-22	1.9		

Inch to Metric (mm) → Inch × 25.4
Metric (mm) to Inch → Metric ÷ 25.4 or Metric × 0.03937

Special / Custom Sizes on request

Unit : Metric

Code	Model	d	L	L1	B	ℓ	D1	Nut	kg	Collet	Spanner
1260 1 ※ 307075	**UTS10080 -HDC07A -75**	0.5 ~ 7.0	75	41	0 ~ 4	22 ~ 26	23	HDP-07A		FDC-07	S-0
1260 1 ※ 307090	**-90**	0.5 ~ 7.0	90	56	0 ~ 4	22 ~ 45	23	HDP-07A			
1260 1 ※ 307120	**-120**	0.5 ~ 7.0	120	86	0 ~ 4	22 ~ 45	23	HDP-07A			
1260 1 ※ 309075	**UTS10080 -HDC09A -75**	2.5 ~ 9.0	75	41	0 ~ 4	27 ~ 32	26	HDP-09		FDC-09	S-1L
1260 1 ※ 309090	**-90**	2.5 ~ 9.0	90	56	0 ~ 4	27 ~ 47	26	HDP-09			
1260 1 ※ 309120	**-120**	2.5 ~ 9.0	120	86	0 ~ 4	27 ~ 57	26	HDP-09			
1260 1 ※ 312090	**UTS10080 -HDC12A -90**	2.5 ~ 12.0	90	56	0 ~ 5	33 ~ 42	32	HDP-12		FDC-12	S-3L
1260 1 ※ 312120	**-120**	2.5 ~ 12.0	120	86	0 ~ 5	33 ~ 60	32	HDP-12	2.8		
1260 1 ※ 312150	**-150**	2.5 ~ 12.0	150	116	0 ~ 5	33 ~ 70	32	HDP-12			
1260 1 ※ 316090	**UTS10080 -HDC16A -90**	3.5 ~ 16.0	90	56	0 ~ 6	38 ~ 42	36	HDP-16		FDC-16	S-4L
1260 1 ※ 316120	**-120**	3.5 ~ 16.0	120	86	0 ~ 6	38 ~ 60	36	HDP-16	2.9		
1260 1 ※ 316150	**-150**	3.5 ~ 16.0	150	116	0 ~ 6	38 ~ 70	36	HDP-16			
1260 1 ※ 322090	**UTS10080 -HDC22A -90**	3.5 ~ 22.0	90	56	—	66	46	HDP-22		FDC-22	S-5L
1260 1 ※ 322120	**-120**	3.5 ~ 22.0	120	86	0 ~ 8	47 ~ 59	46	HDP-22	3.1		
1260 1 ※ 322150	**-150**	3.5 ~ 22.0	150	116	0 ~ 8	47 ~ 82	46	HDP-22	3.4		

When placing an order, please specify high or low pressure. For high pressure type, please add (–H) on end of the description.

1.Collet, spanner, hexagon head preset screw, preset screw for semi-dry processing are sold separately. Standard preset screw is included.
2.Refer to P.092 for minimum tool insertion length in case of using our coolant collets (OH,C or MS).
3. ℓ indicates dimension when using with a preset screw.
4.UTS5040 is available in high pressure only.
5.See P.499 for standard Tightening Torque.

Collet
P. 086 - 089



Spanner
P. 095



Preset screw
P. 094

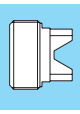

Ordering Example

Low pressure type

0 ~ 1.0MPa (UTS10080 : 0 ~ 2.0MPa)

UTS6350 - HDC 16 A - 120

Shank size | Max. collet I.D. | Projection length (L)

Ordering Example

High pressure type

1.1 ~ 7.0MPa (UTS10080 : 2.1 ~ 7.0MPa)

UTS6350 - HDC 16 A - 120 - H

Shank size | Max. collet I.D. | Projection length (L) | High pressure type

Inch to Metric (mm) → Inch × 25.4
Metric (mm) to Inch → Metric ÷ 25.4 or Metric × 0.03937

Special / Custom Sizes on request

SDM

Drill Holder With Easy Tool Length Adjustment

● Projection length of the cutting tool can be adjusted by simply turning circumference of the holder.

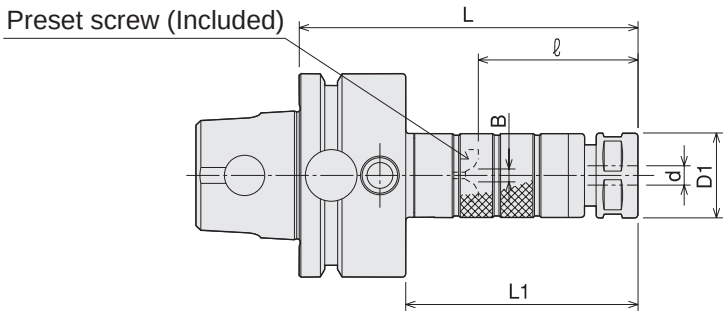

Unit : Metric

Code	Model	d	L	ℓ	L1	B	D1	Nut	Collet	Spanner
1380 01107090	UTS5040 -SDM07 -90-H	0.5 ~ 7.0	90	29 ~ 39	60	0 ~ 4	23	HDP-07A	FDC-07	S-0
1380 01107105	-105-H	0.5 ~ 7.0	105	29 ~ 54	75	0 ~ 4	23	HDP-07A		
1380 01107120	-120-H	0.5 ~ 7.0	120	29 ~ 54	90	0 ~ 4	23	HDP-07A		
1380 01109090	UTS5040 -SDM09 -90-H	2.5 ~ 9.0	90	28 ~ 38	60	0 ~ 4	26	HDP-09	FDC-09	S-1L
1380 01109105	-105-H	2.5 ~ 9.0	105	28 ~ 53	75	0 ~ 4	26	HDP-09		
1380 01109120	-120-H	2.5 ~ 9.0	120	28 ~ 53	90	0 ~ 4	26	HDP-09		
1380 01112105	UTS5040 -SDM12 -105-H	2.5 ~ 12.0	105	34 ~ 44	75	0 ~ 5	32	HDP-12	FDC-12	S-3L
1380 01112120	-120-H	2.5 ~ 12.0	120	34 ~ 59	90	0 ~ 5	32	HDP-12		
1380 01112135	-135-H	2.5 ~ 12.0	135	34 ~ 59	105	0 ~ 5	32	HDP-12		
1380 01112150	-150-H	2.5 ~ 12.0	150	34 ~ 59	120	0 ~ 5	32	HDP-12		
1380 01116105	UTS5040 -SDM16 -105-H	3.5 ~ 16.0	105	40 ~ 50	75	0 ~ 6	36	HDP-16	FDC-16	S-4L
1380 01116120	-120-H	3.5 ~ 16.0	120	40 ~ 65	90	0 ~ 6	36	HDP-16		
1380 01116135	-135-H	3.5 ~ 16.0	135	40 ~ 65	105	0 ~ 6	36	HDP-16		
1380 01116150	-150-H	3.5 ~ 16.0	150	40 ~ 65	120	0 ~ 6	36	HDP-16		
1380 01122120	UTS5040 -SDM22 -120-H	3.5 ~ 22.0	120	48 ~ 58	90	0 ~ 8	46	HDP-22	FDC-22	S-5L
1380 01122135	-135-H	3.5 ~ 22.0	135	48 ~ 73	105	0 ~ 8	46	HDP-22		
1380 01122150	-150-H	3.5 ~ 22.0	150	48 ~ 73	120	0 ~ 8	46	HDP-22		
1380 0 ※ 207090	UTS6350 -SDM07 -90	0.5 ~ 7.0	90	29 ~ 39	57	0 ~ 4	23	HDP-07A	FDC-07	S-0
1380 0 ※ 207105	-105	0.5 ~ 7.0	105	29 ~ 54	72	0 ~ 4	23	HDP-07A		
1380 0 ※ 207120	-120	0.5 ~ 7.0	120	29 ~ 54	87	0 ~ 4	23	HDP-07A		
1380 0 ※ 207135	-135	0.5 ~ 7.0	135	29 ~ 54	102	0 ~ 4	23	HDP-07A		
1380 0 ※ 207150	-150	0.5 ~ 7.0	150	29 ~ 54	117	0 ~ 4	23	HDP-07A		
1380 0 ※ 209090	UTS6350 -SDM09 -90	2.5 ~ 9.0	90	28 ~ 38	57	0 ~ 4	26	HDP-09	FDC-09	S-1L
1380 0 ※ 209105	-105	2.5 ~ 9.0	105	28 ~ 53	72	0 ~ 4	26	HDP-09		
1380 0 ※ 209120	-120	2.5 ~ 9.0	120	28 ~ 53	87	0 ~ 4	26	HDP-09		
1380 0 ※ 209135	-135	2.5 ~ 9.0	135	28 ~ 53	102	0 ~ 4	26	HDP-09		
1380 0 ※ 209150	-150	2.5 ~ 9.0	150	28 ~ 53	117	0 ~ 4	26	HDP-09		
1380 0 ※ 209180	-180	2.5 ~ 9.0	180	28 ~ 53	147	0 ~ 4	26	HDP-09		
1380 0 ※ 212105	UTS6350 -SDM12 -105	2.5 ~ 12.0	105	34 ~ 44	72	0 ~ 5	32	HDP-12	FDC-12	S-3L
1380 0 ※ 212120	-120	2.5 ~ 12.0	120	34 ~ 59	87	0 ~ 5	32	HDP-12		
1380 0 ※ 212135	-135	2.5 ~ 12.0	135	34 ~ 59	102	0 ~ 5	32	HDP-12		
1380 0 ※ 212150	-150	2.5 ~ 12.0	150	34 ~ 59	117	0 ~ 5	32	HDP-12		
1380 0 ※ 212180	-180	2.5 ~ 12.0	180	34 ~ 59	147	0 ~ 5	32	HDP-12		
1380 0 ※ 216105	UTS6350 -SDM16 -105	3.5 ~ 16.0	105	40 ~ 50	72	0 ~ 6	36	HDP-16	FDC-16	S-4L
1380 0 ※ 216120	-120	3.5 ~ 16.0	120	40 ~ 65	87	0 ~ 6	36	HDP-16		
1380 0 ※ 216135	-135	3.5 ~ 16.0	135	40 ~ 65	102	0 ~ 6	36	HDP-16		
1380 0 ※ 216150	-150	3.5 ~ 16.0	150	40 ~ 65	117	0 ~ 6	36	HDP-16		
1380 0 ※ 216180	-180	3.5 ~ 16.0	180	40 ~ 65	147	0 ~ 6	36	HDP-16		
1380 0 ※ 222120	UTS6350 -SDM22 -120	3.5 ~ 22.0	120	48 ~ 58	87	0 ~ 8	46	HDP-22	FDC-22	S-5L
1380 0 ※ 222135	-135	3.5 ~ 22.0	135	48 ~ 73	102	0 ~ 8	46	HDP-22		
1380 0 ※ 222150	-150	3.5 ~ 22.0	150	48 ~ 73	117	0 ~ 8	46	HDP-22		
1380 0 ※ 222180	-180	3.5 ~ 22.0	180	48 ~ 73	147	0 ~ 8	46	HDP-22		

Inch to Metric (mm) → Inch × 25.4
Metric (mm) to Inch → Metric ÷ 25.4 or Metric × 0.03937

Special / Custom Sizes on request

Unit : Metric

Code	Model	d	L	ℓ	L1	B	D1	Nut	Collet	Spanner
1380 0 ※ 307090	UTS10080 -SDM07 -90	0.5 ~ 7.0	90	29 ~ 39	56	0 ~ 4	23	HDP-07A	FDC-07	S-0
1380 0 ※ 307105	-105	0.5 ~ 7.0	105	29 ~ 54	71	0 ~ 4	23	HDP-07A		
1380 0 ※ 307120	-120	0.5 ~ 7.0	120	29 ~ 54	86	0 ~ 4	23	HDP-07A		
1380 0 ※ 307135	-135	0.5 ~ 7.0	135	29 ~ 54	101	0 ~ 4	23	HDP-07A		
1380 0 ※ 307150	-150	0.5 ~ 7.0	150	29 ~ 54	116	0 ~ 4	23	HDP-07A		
1380 0 ※ 307165	-165	0.5 ~ 7.0	165	29 ~ 54	131	0 ~ 4	23	HDP-07A		
1380 0 ※ 309090	UTS10080 -SDM09 -90	2.5 ~ 9.0	90	28 ~ 38	56	0 ~ 4	26	HDP-09	FDC-09	S-1L
1380 0 ※ 309105	-105	2.5 ~ 9.0	105	28 ~ 53	71	0 ~ 4	26	HDP-09		
1380 0 ※ 309120	-120	2.5 ~ 9.0	120	28 ~ 53	86	0 ~ 4	26	HDP-09		
1380 0 ※ 309135	-135	2.5 ~ 9.0	135	28 ~ 53	101	0 ~ 4	26	HDP-09		
1380 0 ※ 309150	-150	2.5 ~ 9.0	150	28 ~ 53	116	0 ~ 4	26	HDP-09		
1380 0 ※ 309180	-180	2.5 ~ 9.0	180	28 ~ 53	146	0 ~ 4	26	HDP-09		
1380 0 ※ 312105	UTS10080 -SDM12 -105	2.5 ~ 12.0	105	34 ~ 44	71	0 ~ 5	32	HDP-12	FDC-12	S-3L
1380 0 ※ 312120	-120	2.5 ~ 12.0	120	34 ~ 59	86	0 ~ 5	32	HDP-12		
1380 0 ※ 312135	-135	2.5 ~ 12.0	135	34 ~ 59	101	0 ~ 5	32	HDP-12		
1380 0 ※ 312150	-150	2.5 ~ 12.0	150	34 ~ 59	116	0 ~ 5	32	HDP-12		
1380 0 ※ 312180	-180	2.5 ~ 12.0	180	34 ~ 59	146	0 ~ 5	32	HDP-12		
1380 0 ※ 316105	UTS10080 -SDM16 -105	3.5 ~ 16.0	105	40 ~ 50	71	0 ~ 6	36	HDP-16	FDC-16	S-4L
1380 0 ※ 316120	-120	3.5 ~ 16.0	120	40 ~ 65	86	0 ~ 6	36	HDP-16		
1380 0 ※ 316135	-135	3.5 ~ 16.0	135	40 ~ 65	101	0 ~ 6	36	HDP-16		
1380 0 ※ 316150	-150	3.5 ~ 16.0	150	40 ~ 65	116	0 ~ 6	36	HDP-16		
1380 0 ※ 316180	-180	3.5 ~ 16.0	180	40 ~ 65	146	0 ~ 6	36	HDP-16		
1380 0 ※ 322120	UTS10080 -SDM22 -120	3.5 ~ 22.0	120	48 ~ 58	86	0 ~ 8	46	HDP-22	FDC-22	S-5L
1380 0 ※ 322135	-135	3.5 ~ 22.0	135	48 ~ 73	101	0 ~ 8	46	HDP-22		
1380 0 ※ 322150	-150	3.5 ~ 22.0	150	48 ~ 73	116	0 ~ 8	46	HDP-22		
1380 0 ※ 322180	-180	3.5 ~ 22.0	180	48 ~ 73	146	0 ~ 8	46	HDP-22		
1380 0 ※ 322210	-210	3.5 ~ 22.0	210	48 ~ 73	176	0 ~ 8	46	HDP-22		

When placing an order, please specify high or low pressure. For high pressure type, please add (–H) on end of the description.

1.Collet and spanner are sold separately.
2. ℓ is the dimension between the cap end and the preset screw top end.
3.UTS5040 is available in high pressure only.
4.See P.499 for standard Tightening Torque.

Collet
P. 086 - 089



Spanner
P. 095



Ordering Example

Low pressure type

0 ~ 1.0MPa (UTS10080 : 0 ~ 2.0MPa)

UTS6350	-	SDM	12	-	105
Shank size			Max. collet I.D.		Projection length (L)

Ordering Example

High pressure type

1.1 ~ 7.0MPa (UTS10080 : 2.1 ~ 7.0MPa)

UTS6350	-	SDM	12	-	105	-	H
Shank size			Max. collet I.D.		Projection length (L)		High pressure type

ERC

Collet Holder For Small Diameters

● For drilling in tight space.

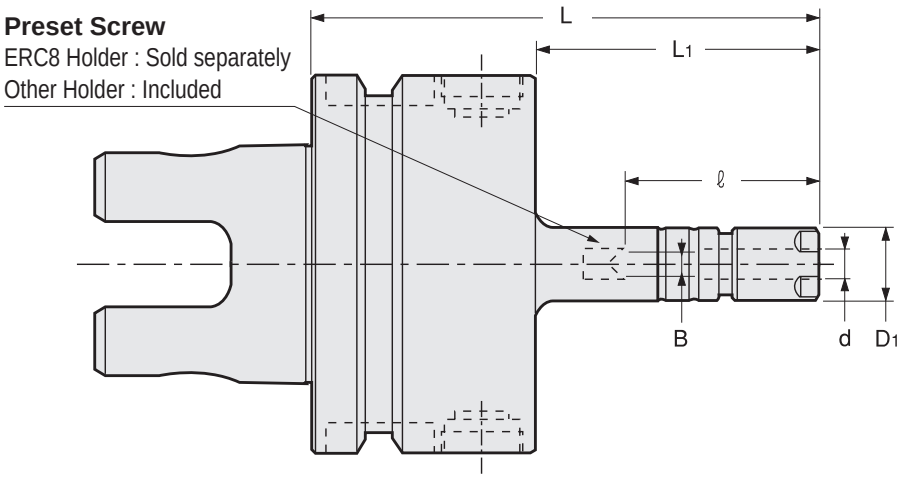

Unit : Metric

Code	Model	d	L	L1	B	ℓ	D1	Nut	kg	Collet	Spanner
1340 01108075	UTS5040 -ERC8 -75H	0.5 ~ 5.0	75	45	— (0 ~ 2.4)	34 (19 ~ 24)	12	ERP-8	0.5	ER8	S-8E
1340 01108105	-105H	0.5 ~ 5.0	105	75	— (0 ~ 2.4)	34 (19 ~ 31)	12	ERP-8	0.6		
1340 01110075	UTS5040 -ERC11S -75H	0.5 ~ 7.0	75	45	0 ~ 4	22 ~ 32	16	ERP-11S	0.6	ER11	S-11E
1340 01110105	-105H	0.5 ~ 7.0	105	75	0 ~ 4	22 ~ 45	16	ERP-11S	0.6		
1340 0 ※ 208075	UTS6350 -ERC8 -75	0.5 ~ 5.0	75	42	— (0 ~ 2.4)	34 (19 ~ 24)	12	ERP-8	0.9	ER8	S-8E
1340 0 ※ 208105	-105	0.5 ~ 5.0	105	72	— (0 ~ 2.4)	34 (19 ~ 31)	12	ERP-8	1.0		
1340 0 ※ 210075	UTS6350 -ERC11S -75	0.5 ~ 7.0	75	42	0 ~ 4	22 ~ 34	16	ERP-11S	1.0	ER11	S-11E
1340 0 ※ 210105	-105	0.5 ~ 7.0	105	72	0 ~ 4	22 ~ 45	16	ERP-11S	1.0		

When placing an order, please specify high or low pressure. For high pressure type, please add (–H) on end of the description.

1.Collet and spanner are sold separately.
2.ES8, a preset screw for ERC8, is sold separately. ERC11S includes a standard preset screw HDS-07A-ES11.
3." B " and " ℓ " dimensions in brackets are for using ES8 preset screw.
4.Refer to P.092 for minimum tool insertion length in case of using our coolant collets.
5.UTS5040 is available in high pressure only.
6.See P.499 for standard Tightening Torque.

Collet P. 090-091


Spanner P. 095


Preset screw P. 094


Ordering Example

Low pressure type
0 ~ 1.0MPa (UTS10080 : 0 ~ 2.0MPa)

UTS6350 - **ERC** **8** - **75**
Shank size | Max. collet I.D. | Projection length (L)

Ordering Example

High pressure type
1.1 ~ 7.0MPa (UTS10080 : 2.1 ~ 7.0MPa)

UTS6350 - **ERC** **8** - **75** - **H**
Shank size | Max. collet I.D. | Projection length (L) | High pressure type

Inch to Metric (mm) → Inch × 25.4
Metric (mm) to Inch → Metric ÷ 25.4 or Metric × 0.03937

Special / Custom Sizes on request

ERC-T

Collet Holder For Small Diameters (Taper Type)

● For drilling in tight space.

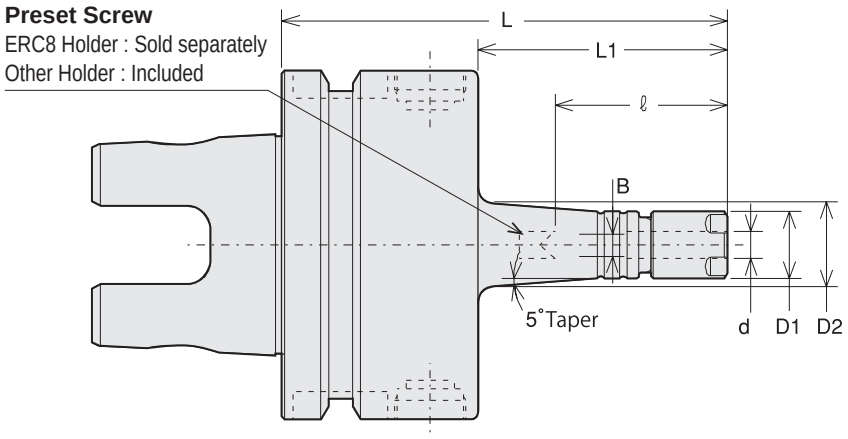

Unit : Metric

Code	Model	d	L	L1	B	ℓ	D1	D2	Nut	Collet	Spanner
1340 11108075	**UTS5040 -ERC8 -75TH**	0.5 ~ 5.0	75	45	— (0 ~ 2.4)	34 (19 ~ 24)	12	16	ERP-8	ER8	S-8E
1340 11108105	**-105TH**	0.5 ~ 5.0	105	75	— (0 ~ 2.4)	34 (19 ~ 31)	12	21	ERP-8		
1340 11110075	**UTS5040 -ERC11S -75TH**	0.5 ~ 7.0	75	45	0 ~ 4	22 ~ 32	16	19.5	ERP-11S	ER11	S-11E
1340 11110105	**-105TH**	0.5 ~ 7.0	105	75	0 ~ 4	22 ~ 45	16	25	ERP-11S		
1340 1 ※ 208075	**UTS6350 -ERC8 -75T**	0.5 ~ 5.0	75	42	— (0 ~ 2.4)	34 (19 ~ 24)	12	15.5	ERP-8	ER8	S-8E
1340 1 ※ 208105	**-105T**	0.5 ~ 5.0	105	72	— (0 ~ 2.4)	34 (19 ~ 31)	12	20.5	ERP-8		
1340 1 ※ 210075	**UTS6350 -ERC11S -75T**	0.5 ~ 7.0	75	42	0 ~ 4	22 ~ 34	16	19	ERP-11S	ER11	S-11E
1340 1 ※ 210105	**-105T**	0.5 ~ 7.0	105	72	0 ~ 4	22 ~ 45	16	24.5	ERP-11S		

When placing an order, please specify high or low pressure. For high pressure type, please add (–H) on end of the description.

1.Collet and spanner are sold separately.
2.ES8, a preset screw for ERC8-T, is sold separately. ERC11S-T includes a standard preset screw HDS-07A-ES11.
3." B " and " ℓ " dimensions in brackets are for using ES8 preset screw.
4.Refer to P.092 for minimum tool insertion length in case of using our coolant collets.
5.UTS5040 is available in high pressure only.
6.See P.499 for standard Tightening Torque.

Collet P. 090-091

Spanner P. 095

Preset screw P. 094







Ordering Example

Low pressure type

0 ~ 1.0MPa (UTS10080 : 0 ~ 2.0MPa)

UTS6350 - **ERC** **8** - **105** **T**

Shank size | Max. collet I.D. | Projection length (L)

Ordering Example

High pressure type

1.1 ~ 7.0MPa (UTS10080 : 2.1 ~ 7.0MPa)

UTS6350 - **ERC** **8** - **105** **T** - **H**

Shank size | Max. collet I.D. | Projection length (L) | High pressure type

Inch to Metric (mm) → Inch × 25.4
Metric (mm) to Inch → Metric ÷ 25.4 or Metric × 0.03937

Special / Custom Sizes on request

HDZ

"R"Zero Holder

● Runout accuracy of the cutting edge can be adjusted as closely as to zero.

Type1

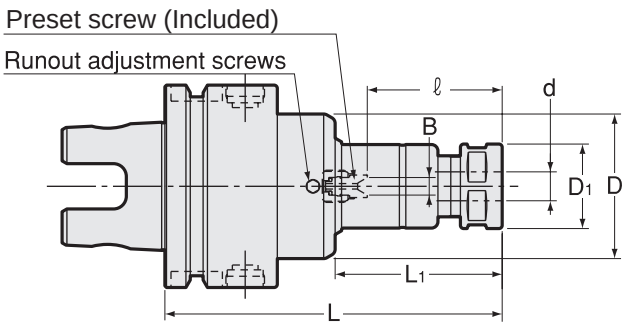

Type2

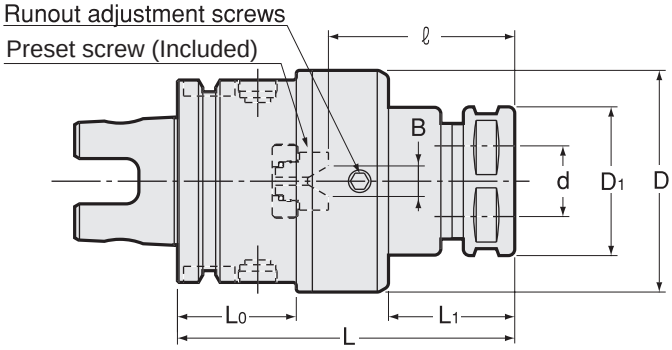

Unit : Metric

Code	Model	Type	d	L	ℓ	B	D	L1	L0	D1	Nut	kg	Collet	Spanner	Wrench
1250 01107075	**UTS5040 -HDZ07 -75-H**	1	0.5 ~ 7.0	75	22 ~ 32	0 ~ 4	41	29	—	23	HDP-07A		FDC-07	S-0	L-3T
1250 01107090	**-90-H**	1	0.5 ~ 7.0	90	22 ~ 45	0 ~ 4	41	44	—	23	HDP-07A				
1250 01107120	**-120-H**	1	0.5 ~ 7.0	120	22 ~ 45	0 ~ 4	41	74	—	23	HDP-07A				
1250 01109075	**UTS5040 -HDZ09 -75-H**	1	2.5 ~ 9.0	75	27 ~ 31	0 ~ 4	41	29	—	26	HDP-09		FDC-09	S-1L	L-3T
1250 01109090	**-90-H**	1	2.5 ~ 9.0	90	27 ~ 47	0 ~ 4	41	44	—	26	HDP-09				
1250 01109120	**-120-H**	1	2.5 ~ 9.0	120	27 ~ 61	0 ~ 4	41	74	—	26	HDP-09				
1250 01112090	**UTS5040 -HDZ12 -90-H**	2	2.5 ~ 12.0	90	33 ~ 41	0 ~ 5	52	35	30	32	HDP-12		FDC-12	S-3L	L-4T
1250 01112120	**-120-H**	2	2.5 ~ 12.0	120	33 ~ 70	0 ~ 5	52	65	30	32	HDP-12				
1250 01112150	**-150-H**	2	2.5 ~ 12.0	150	33 ~ 73	0 ~ 5	52	95	30	32	HDP-12				
1250 01116090	**UTS5040 -HDZ16 -90-H**	2	3.5 ~ 16.0	90	38 ~ 49	0 ~ 6	56	35	30	36	HDP-16		FDC-16	S-4L	L-4T
1250 01116120	**-120-H**	2	3.5 ~ 16.0	120	38 ~ 64	0 ~ 6	56	65	30	36	HDP-16				
1250 01116150	**-150-H**	2	3.5 ~ 16.0	150	38 ~ 85	0 ~ 6	56	95	30	36	HDP-16				
1250 0 ※ 207075	**UTS6350 -HDZ07 -75**	1	0.5 ~ 7.0	75	22 ~ 34	0 ~ 4	41	26	—	23	HDP-07A		FDC-07	S-0	L-3T
1250 0 ※ 207090	**-90**	1	0.5 ~ 7.0	90	22 ~ 45	0 ~ 4	41	41	—	23	HDP-07A	1.1			
1250 0 ※ 207120	**-120**	1	0.5 ~ 7.0	120	22 ~ 45	0 ~ 4	41	71	—	23	HDP-07A	1.2			
1250 0 ※ 209075	**UTS6350 -HDZ09 -75**	1	2.5 ~ 9.0	75	27 ~ 34	0 ~ 4	45	26	—	26	HDP-09		FDC-09	S-1L	L-3T
1250 0 ※ 209090	**-90**	1	2.5 ~ 9.0	90	27 ~ 42	0 ~ 4	45	41	—	26	HDP-09	1.1			
1250 0 ※ 209120	**-120**	1	2.5 ~ 9.0	120	27 ~ 57	0 ~ 4	45	71	—	26	HDP-09	1.3			
1250 0 ※ 212090	**UTS6350 -HDZ12 -90**	1	2.5 ~ 12.0	90	33 ~ 47	0 ~ 5	52	37	—	32	HDP-12	1.3	FDC-12	S-3L	L-4T
1250 0 ※ 212120	**-120**	1	2.5 ~ 12.0	120	33 ~ 69	0 ~ 5	52	67	—	32	HDP-12				
1250 0 ※ 212150	**-150**	1	2.5 ~ 12.0	150	33 ~ 69	0 ~ 5	52	97	—	32	HDP-12	1.6			
1250 0 ※ 216090	**UTS6350 -HDZ16 -90**	1	3.5 ~ 16.0	90	38 ~ 47	0 ~ 6	56	37	33	36	HDP-16	1.3	FDC-16	S-4L	L-4T
1250 0 ※ 216120	**-120**	1	3.5 ~ 16.0	120	38 ~ 61	0 ~ 6	56	67	33	36	HDP-16	1.5			
1250 0 ※ 216150	**-150**	1	3.5 ~ 16.0	150	38 ~ 61	0 ~ 6	56	97	33	36	HDP-16				
1250 0 ※ 222120	**UTS6350 -HDZ22 -120**	2	3.5 ~ 22.0	120	47 ~ 62	0 ~ 8	69	58	33	46	HDP-22	2.0	FDC-22	S-5L	L-5T
1250 0 ※ 222150	**-150**	2	3.5 ~ 22.0	150	47 ~ 92	0 ~ 8	69	88	33	46	HDP-22				

Inch to Metric (mm) → Inch × 25.4
Metric (mm) to Inch → Metric ÷ 25.4 or Metric × 0.03937

Special / Custom Sizes on request

Unit : Metric

Code	Model	Type	d	L	ℓ	B	D	L1	L0	D1	Nut	kg	Collet	Spanner	Wrench
1250 0 ※ 307075	**UTS10080 -HDZ07 -75**	1	0.5 ~ 7.0	75	22 ~ 26	0 ~ 4	41	25	–	23	HDP-07A		FDC-07	S-0	L-3T
1250 0 ※ 307090	**-90**	1	0.5 ~ 7.0	90	22 ~ 45	0 ~ 4	41	40	–	23	HDP-07A				
1250 0 ※ 307120	**-120**	1	0.5 ~ 7.0	120	22 ~ 45	0 ~ 4	41	70	–	23	HDP-07A				
1250 0 ※ 309075	**UTS10080 -HDZ09 -75**	1	2.5 ~ 9.0	75	27	0 ~ 4	45	25	–	26	HDP-09		FDC-09	S-1L	L-3T
1250 0 ※ 309090	**-90**	1	2.5 ~ 9.0	90	27 ~ 47	0 ~ 4	45	40	–	26	HDP-09				
1250 0 ※ 309120	**-120**	1	2.5 ~ 9.0	120	27 ~ 57	0 ~ 4	45	70	–	26	HDP-09				
1250 0 ※ 312090	**UTS10080 -HDZ12 -90**	1	2.5 ~ 12.0	90	33 ~ 41	0 ~ 5	56	36	–	32	HDP-12		FDC-12	S-3L	L-4T
1250 0 ※ 312120	**-120**	1	2.5 ~ 12.0	120	33 ~ 59	0 ~ 5	56	66	–	32	HDP-12				
1250 0 ※ 312150	**-150**	1	2.5 ~ 12.0	150	33 ~ 69	0 ~ 5	56	96	–	32	HDP-12				
1250 0 ※ 316090	**UTS10080 -HDZ16 -90**	1	3.5 ~ 16.0	90	38 ~ 41	0 ~ 6	62	36	–	36	HDP-16		FDC-16	S-4L	L-4T
1250 0 ※ 316120	**-120**	1	3.5 ~ 16.0	120	38 ~ 59	0 ~ 6	62	66	–	36	HDP-16				
1250 0 ※ 316150	**-150**	1	3.5 ~ 16.0	150	38 ~ 69	0 ~ 6	62	96	–	36	HDP-16				
1250 0 ※ 322090	**UTS10080 -HDZ22 -90**	1	3.5 ~ 22.0	90	56	0 ~ 8	76	32	–	46	HDP-22		FDC-22	S-5L	L-5T
1250 0 ※ 322120	**-120**	1	3.5 ~ 22.0	120	47 ~ 58	0 ~ 8	76	62	–	46	HDP-22				
1250 0 ※ 322150	**-150**	1	3.5 ~ 22.0	150	47 ~ 82	0 ~ 8	76	92	–	46	HDP-22				

When placing an order, please specify high or low pressure. For high pressure type, please add (–H) on end of the description.

1.Collet, spanner, hexagon head preset screw, preset screw for semi-dry processing are sold separately. Standard preset screw is included.
2.Refer to P.092 for minimum tool insertion length in case of using our coolant collets (OH,C or MS).
3. ℓ indicates dimension when using with a preset screw.
4.UTS5040 is available in high pressure only.
5.See P.499 for standard Tightening Torque.

Collet
P. 086 - 089


Spanner
P. 095


Preset screw
P. 094
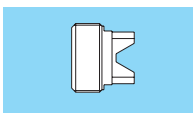

Adjustment wrench
P. 095


Ordering Example

Low pressure type

0 ~ 1.0MPa (UTS10080 : 0 ~ 2.0MPa)

UTS6350 - **HDZ** **12** - **90**

Shank size | Max. collet I.D. | Projection length (L)

Ordering Example

High pressure type

1.1 ~ 7.0MPa (UTS10080 : 2.1 ~ 7.0MPa)

UTS6350 - **HDZ** **12** - **90** - **H**

Shank size | Max. collet I.D. | Projection length (L) | High pressure type

Inch to Metric (mm) → Inch × 25.4
Metric (mm) to Inch → Metric ÷ 25.4 or Metric × 0.03937

Special / Custom Sizes on request

CTZ

"R"Zero Holder for Large Diameter

● Runout of the cutting edge can be adjusted as close as to zero. Suitable for large diameter reaming.

Type1

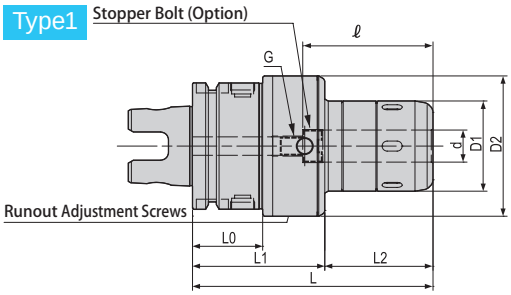

Type2

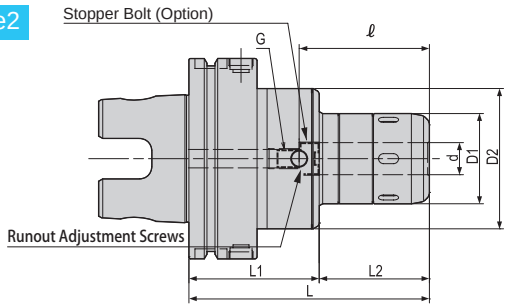

Caution

Please rotate the clamping ring counterclockwise more than 360 degrees after a cutting tool is removed.

Metric Sizes

Unit : Metric

Code	Model	Type	d	L	L1	L2	D1	D2	L0	ℓ	G P=1.0	Spanner	Wrench
17301 ※ 225135	UTS6350 -CTZ25A-135	1	25	135	64	71	61	74	35	80	10	HS-2.5-25	L-6L (Included)
17301 ※ 225150	-150	1	25	150	64	86	61	74	35	80	10		
17301 ※ 232135	UTS6350 -CTZ32A-135 ＊1	1	32	135	64	71	68	80	35	105	10	HS-3-32	
17301 ※ 232150	-150 ＊1	1	32	150	64	86	68	80	35	120	10		
17301 ※ 325135	UTS10080 -CTZ25A-135	2	25	135	64	71	61	74	–	80	10	HS-2.5-25	
17301 ※ 325150	-150	2	25	150	64	86	61	74	–	80	10		
17301 ※ 332135	UTS10080 -CTZ32A-135 ＊1	2	32	135	64	71	68	80	–	100	10	HS-3-32	
17301 ※ 332150	-150 ＊1	2	32	150	64	86	68	80	–	115	10		
17300 ※ 342135	UTS10080 -CTZ42 -135 ＊2	2	42	135	65	70	88	99	–	100	10	HS-4-42	
17300 ※ 342150	-150 ＊2	2	42	150	65	85	88	99	–	110	10		

When placing an order, please specify high or low pressure. For high pressure type, please add (–H) on end of the description.

1. When ordering, indicate number of spanners required. "No charge" spanners are limited to number of holders on order.
2. A wrench is included.
3. For high pressure type, please add "H" after the model name.
4. The model with " ＊1" and " ＊2" are not compatible with some accessories. For more information about the accessories, please refer below chart.

Spanner

P. 069



Accessories

Models with ＊1 - ＊2 cannot be used with some accessories due to short ℓ length.

	Stopper Bolt	Straight Collet		Morse Taper Adapter		Jacobs Adapter	
	BL (P.389)	MC (P.066)	MCA (P.067)	MA (P.068)	MAB (P.068)	JA (P.069)	JAB (P.069)
＊1	BL16 only	Yes	No	Yes	Yes	Yes	Yes
＊2	BL16 only	Yes	No	No	No	No	No

Ordering Example

Low pressure type

0 ~ 1.0MPa (UTS10080 : 0 ~ 2.0MPa)

UTS6350 - CTZ 32 A - 135

Shank size | I.D. (d) | Projection length (L)

Ordering Example

High pressure type

1.1 ~ 7.0MPa (UTS10080 : 2.1 ~ 7.0MPa)

UTS6350 - CTZ 32 A - 135 - H

Shank size | I.D. (d) | Projection length (L) | High pressure type

Min. chucking length

Direct Chucking (without MC Collet)

I.D.of Chuck	Min. chucking length
25,32,42	50

With MC Collet

Collet I.D.	Min. chucking length	
	MC	MC-C、MC-OH
6,8	30	30
10,12	40	40
16,20	45	45
25	50	50
32	50	60

Inch to Metric (mm) → Inch × 25.4
Metric (mm) to Inch → Metric ÷ 25.4 or Metric × 0.03937

Special / Custom Sizes on request

ERZ

"R"Zero Holder For Small Diameters

● Holder with runout adjustment mechanism. Suitable for drilling in tight space.

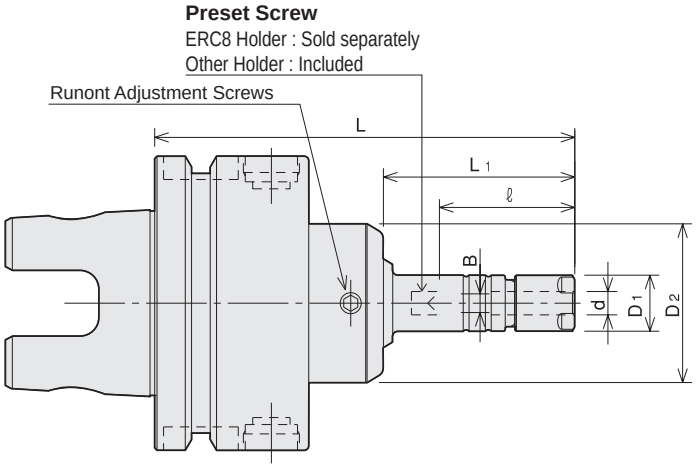

Unit : Metric

Code	Model	d	L	L1	B	ℓ	D1	D2	Nut	Collet	Spanner	Wrench
1350 01108075	**UTS5040 -ERZ8 -75H**	0.5 ~ 5.0	75	29	— (0 ~ 3.1)	33 (19 ~ 22)	12	34	ERP-8	ER8	S-8E	L-3T
1350 01108090	**-90H**	0.5 ~ 5.0	90	44	— (0 ~ 3.1)	33 (19 ~ 29)	12	34	ERP-8			
1350 01108105	**-105H**	0.5 ~ 5.0	105	59	— (0 ~ 3.1)	33 (19 ~ 29)	12	34	ERP-8			
1350 01110075	**UTS5040 -ERZ11S -75H**	0.5 ~ 7.0	75	29	0 ~ 4	22 ~ 29	16	34	ERP-11S	ER11	S-11E	L-3T
1350 01110090	**-90H**	0.5 ~ 7.0	90	44	0 ~ 4	22 ~ 42	16	34	ERP-11S			
1350 01110105	**-105H**	0.5 ~ 7.0	105	59	0 ~ 4	22 ~ 42	16	34	ERP-11S			
1350 0 ※ 208075	**UTS6350 -ERZ8 -75**	0.5 ~ 5.0	75	26	— (0 ~ 3.1)	33 (19 ~ 22)	12	34	ERP-8	ER8	S-8E	L-3T
1350 0 ※ 208090	**-90**	0.5 ~ 5.0	90	41	— (0 ~ 3.1)	33 (19 ~ 29)	12	34	ERP-8			
1350 0 ※ 208120	**-120**	0.5 ~ 5.0	120	71	— (0 ~ 3.1)	33 (19 ~ 29)	12	34	ERP-8			
1350 0 ※ 210075	**UTS6350 -ERZ11S -75**	0.5 ~ 7.0	75	26	0 ~ 4	22 ~ 31	16	34	ERP-11S	ER11	S-11E	L-3T
1350 0 ※ 210090	**-90**	0.5 ~ 7.0	90	41	0 ~ 4	22 ~ 42	16	34	ERP-11S			
1350 0 ※ 210120	**-120**	0.5 ~ 7.0	120	71	0 ~ 4	22 ~ 42	16	34	ERP-11S			

When placing an order, please specify high or low pressure. For high pressure type, please add (–H) on end of the description.

1.Collet ,spanner and adjustment wrench are sold separately.
2.ES8, a preset screw for ERZ8, is sold separately.
ERZ11S includes a standard preset screw HDS-07A-ES11.
3." B " and " ℓ " dimensions in brackets are for using ES8 preset screw.
4.Refer to P.092 for minimum tool insertion length in case of using our coolant collets.
5.UTS5040 is available in high pressure only.

Collet P. 090-091
Spanner P. 095
Preset screw P. 094
Adjustment wrench P. 095



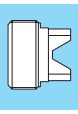


Ordering Example

Low pressure type

0 ~ 1.0MPa (UTS10080 : 0 ~ 2.0MPa)

UTS6350 - **ERZ** **8** - **75**

Shank size | Max. collet I.D. | Projection length (L)

Ordering Example

High pressure type

1.1 ~ 7.0MPa (UTS10080 : 2.1 ~ 7.0MPa)

UTS6350 - **ERZ** **8** - **75** - **H**

Shank size | Max. collet I.D. | Projection length (L) | High pressure type

Inch to Metric (mm) → Inch × 25.4
Metric (mm) to Inch → Metric ÷ 25.4 or Metric × 0.03937

Special / Custom Sizes on request

PHC·A

Power Hydro Chuck

● Hydro chuck with collet holder flexibility. Suitable for high precision cutting.

Type1

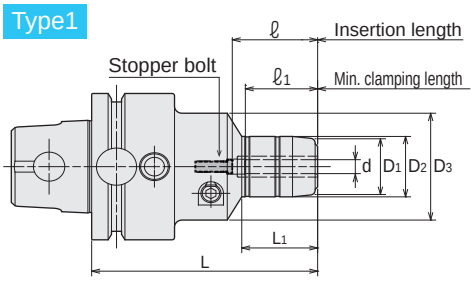

Type2

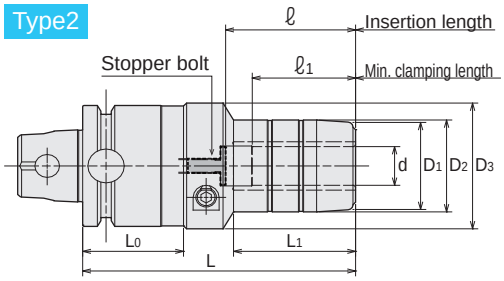

For PHC04A, the stopper bolt is not included. Please order separately (Special item).

Metric Sizes

Unit : Metric

Code	Model	Type	d	L	L1	D1	D2	D3	L0	ℓ	ℓ1	Kg	Wrench (Option)
1390 11104075	**UTS5040 -PHC04A -75-H**	1	4	75	25.1	—	25	46	—	29	24		
1390 11106090	**UTS5040 -PHC06A -90-H**	1	6	90	30	24	26	46	—	34	29	1.0	
1390 11107090	**UTS5040 -PHC07A -90-H**	1	7	90	30	26	28	46	—	34	29	1.0	
1390 11108090	**UTS5040 -PHC08A -90-H**	1	8	90	30	26	28	46	—	34	29	1.0	
1390 11109105	**UTS5040 -PHC09A -105-H**	2	9	105	44	28	30	52	38	50	40	1.1	
1390 11110105	**UTS5040 -PHC10A -105-H**	2	10	105	44	28	30	52	38	50	40	1.1	
1390 11111105	**UTS5040 -PHC11A -105-H**	2	11	105	45	30	32	52	38	50	40	1.1	L-4T
1390 11112105	**UTS5040 -PHC12A -105-H**	2	12	105	45	30	32	52	38	50	40	1.1	
1390 11113105	**UTS5040 -PHC13A -105-H**	2	13	105	46	34	36	52	38	50	40	1.2	
1390 11114105	**UTS5040 -PHC14A -105-H**	2	14	105	46	34	36	52	38	50	40	1.2	
1390 11115105	**UTS5040 -PHC15A -105-H**	2	15	105	46	36	38	52	38	50	40	1.2	
1390 11116105	**UTS5040 -PHC16A -105-H**	2	16	105	46	36	38	52	38	50	40	1.2	
1390 11120105	**UTS5040 -PHC20A -105-H**	1	20	105	49	40	42	46	—	50	40	1.2	
1390 1※204080	**UTS6350 -PHC04A -80**	1	4	80	25.1	—	25	46	—	29	24		
1390 1※206090	**UTS6350 -PHC06A -90**	1	6	90	30	24	26	46	—	34	29	1.3	
1390 1※207090	**UTS6350 -PHC07A -90**	1	7	90	30	26	28	46	—	34	29		
1390 1※208090	**UTS6350 -PHC08A -90**	1	8	90	30	26	28	46	—	34	29		
1390 1※209105	**UTS6350 -PHC09A -105**	1	9	105	44	28	30	52	—	50	40	1.5	
1390 1※210105	**UTS6350 -PHC10A -105**	1	10	105	44	28	30	52	—	50	40	1.5	
1390 1※211105	**UTS6350 -PHC11A -105**	1	11	105	45	30	32	52	—	50	40		L-4T
1390 1※212105	**UTS6350 -PHC12A -105**	1	12	105	45	30	32	52	—	50	40	1.5	
1390 1※213105	**UTS6350 -PHC13A -105**	1	13	105	46	34	36	52	—	50	40		
1390 1※214105	**UTS6350 -PHC14A -105**	1	14	105	46	34	36	52	—	50	40	1.5	
1390 1※215105	**UTS6350 -PHC15A -105**	1	15	105	46	36	38	52	—	50	40		
1390 1※216105	**UTS6350 -PHC16A -105**	1	16	105	46	36	38	52	—	50	40	1.6	
1390 1※220105	**UTS6350 -PHC20A -105**	1	20	105	49	40	42	46	—	50	40	1.5	
1390 1※225120	**UTS6350 -PHC25A -120**	1	25	120	59	50	52	59	—	60	50	2.1	L-6T

When placing an order, please specify high or low pressure.
For high pressure type, please add (–H) on end of the description.

1. Cutting tool shank must be within tolerances specified below ;
   Shank diameter less than 6mm : Within h6 tolerance
   Shank diameter 6mm and over : Within h7 tolerance
   h6 or 0/-0.01 tolerance is recommended when newly making a cutting tool.
2. Do not leave the holder with actuating screw tightened when the chuck is empty.
3. PHC12A and PHC20A have pin holes for collet with stopper pin on its body.
4. UTS5040 is available in high pressure only.
5. For PHC04A, the stopper bolt is not included. Please order separately (Special item).

PHS Collet
P.110

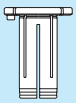

Hex. wrench
P. 095



Tightening torque (Torque wrench : p.498)

model	I.D. (d) mm	Tightening torque (Nm)
PHC·A	06 ~ 08	11 ~ 12
PHC·A	09 ~ 20	7 ~ 8
PHC·A	25, 32	29 ~ 30

Ordering Example

Low pressure type
0 ~ 1.0MPa (UTS10080 : 0 ~ 2.0MPa)

UTS6350 - **PHC** **12** **A** - **105**
Shank size | I.D. (d) | Projection length (L)

Ordering Example

High pressure type
1.1 ~ 7.0MPa (UTS10080 : 2.1 ~ 7.0MPa)

UTS6350 - **PHC** **12** **A** - **105** - **H**
Shank size | I.D. (d) | Projection length (L) | High pressure type

Inch to Metric (mm) → Inch × 25.4
Metric (mm) to Inch → Metric ÷ 25.4 or Metric × 0.03937

Special / Custom Sizes on request

MEMO

PHC·S New

Slim Hydro Chuck

● Perfect choice for tight space applications, such as endmill finishing, drilling and reaming on 5-axis machines.

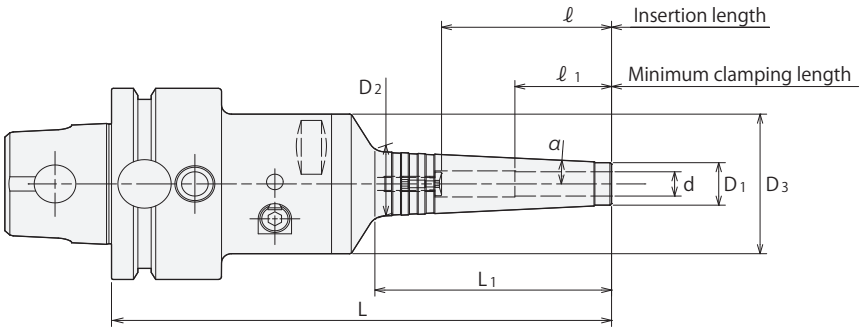

Metric Sizes

Unit : Metric

Code	Model				d	L	L1	D1	D2	D3	ℓ	ℓ 1	α	Kg	Wrench(Option)
1490 01106150	UTS5040	-PHC06S	-150	-H	6	150	71	13	20.5	46	37	29	3°	1.2	
1490 01106165			-165	-H	6	165	87	13	22.2	46	37	29	3°	1.2	
1490 01106180			-180	-H	6	180	102	13	23.7	46	37	29	3°	1.3	
1490 01107150	UTS5040	-PHC07S	-150	-H	7	150	71	14	21.5	46	37	29	3°	1.2	
1490 01107165			-165	-H	7	165	87	14	23.2	46	37	29	3°	1.2	
1490 01107180			-180	-H	7	180	102	14	24.7	46	37	29	3°	1.3	
1490 01108150	UTS5040	-PHC08S	-150	-H	8	150	72	15	22.6	46	50	29	3°	1.2	
1490 01108165			-165	-H	8	165	87	15	24.2	46	50	29	3°	1.2	
1490 01108180			-180	-H	8	180	103	15	25.8	46	50	29	3°	1.3	
1490 01109150	UTS5040	-PHC09S	-150	-H	9	150	72	16	23.6	46	50	40	3°	1.2	
1490 01109165			-165	-H	9	165	87	16	25.2	46	50	40	3°	1.3	L-4T
1490 01109180			-180	-H	9	180	103	16	26.8	46	50	40	3°	1.3	
1490 01110150	UTS5040	-PHC10S	-150	-H	10	150	72	17	24.6	46	50	40	3°	1.2	
1490 01110165			-165	-H	10	165	88	17	26.3	46	50	40	3°	1.3	
1490 01110180			-180	-H	10	180	103	17	27.8	46	50	40	3°	1.3	
1490 01111150	UTS5040	-PHC11S	-150	-H	11	150	73	18	25.7	46	50	40	3°	1.2	
1490 01111165			-165	-H	11	165	88	18	27.3	46	50	40	3°	1.3	
1490 01111180			-180	-H	11	180	104	18	29.0	46	50	40	3°	1.4	
1490 01112150	UTS5040	-PHC12S	-150	-H	12	150	73	19	26.7	46	70	40	3°	1.2	
1490 01112165			-165	-H	12	165	88	19	28.3	46	70	40	3°	1.3	
1490 01112180			-180	-H	12	180	104	19	30.0	46	70	40	3°	1.4	

When placing an order, please specify high or low pressure.
For high pressure type, please add (–H) on end of the description.

1. Tool shank diameter tolerance must be within h6.
2. Do not leave the holder with actuating screw tightened when the chuck is empty.
3. UTS5040 is available in high pressure only.

Tightening torque (Torque wrench : p.498)

model	I.D. (d) mm	Tightening torque (Nm)
PHC·S	06 ~ 12, 16	9 ~ 10
PHC·S	20 ~ 25	23 ~ 24

Ordering Example

Low pressure type
0 ~ 1.0MPa (UTS10080 : 0 ~ 2.0MPa)

UTS5040 - PHC 12 S - 150

- UTS5040 — Shank size
- 12 — I.D. (d)
- 150 — Projection length (L)

Hex. wrench
P. 095



Inch to Metric (mm) → Inch × 25.4
Metric (mm) to Inch → Metric ÷ 25.4 or Metric × 0.03937

Special / Custom Sizes on request

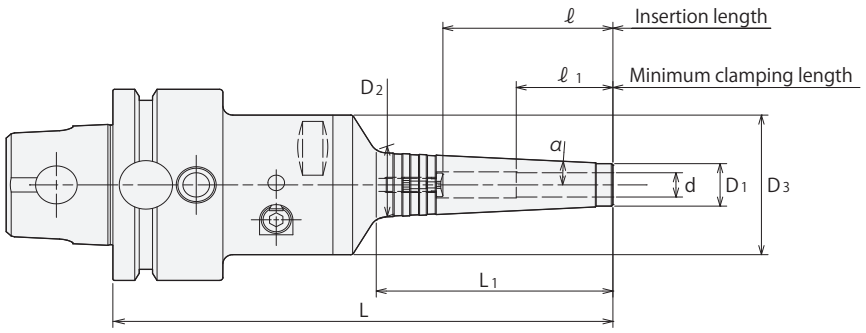

Metric Sizes

Unit : Metric

Code	Model	d	L	L1	D1	D2	D3	ℓ	ℓ 1	α	Kg	Wrench(Option)
1490 0 ※ 206150	UTS6350 -PHC06S -150	6	150	71	13	20.5	46	37	29	3°	1.5	
1490 0 ※ 206165	-165	6	165	87	13	22.2	46	37	29	3°	1.6	
1490 0 ※ 206180	-180	6	180	102	13	23.7	46	37	29	3°	1.6	
1490 0 ※ 206195	-195	6	195	118	13	25.4	46	37	29	3°	1.7	
1490 0 ※ 207150	UTS6350 -PHC07S -150	7	150	71	14	21.5	46	37	29	3°	1.5	
1490 0 ※ 207165	-165	7	165	87	14	23.2	46	37	29	3°	1.6	
1490 0 ※ 207180	-180	7	180	102	14	24.7	46	37	29	3°	1.6	
1490 0 ※ 207195	-195	7	195	118	14	26.4	46	37	29	3°	1.7	
1490 0 ※ 208150	UTS6350 -PHC08S -150	8	150	72	15	22.6	46	50	29	3°	1.5	
1490 0 ※ 208165	-165	8	165	87	15	24.2	46	50	29	3°	1.6	
1490 0 ※ 208180	-180	8	180	103	15	25.8	46	50	29	3°	1.6	
1490 0 ※ 208195	-195	8	195	118	15	27.4	46	50	29	3°	1.7	
1490 0 ※ 209150	UTS6350 -PHC09S -150	9	150	72	16	23.6	46	50	40	3°	1.5	
1490 0 ※ 209165	-165	9	165	87	16	25.2	46	50	40	3°	1.6	
1490 0 ※ 209180	-180	9	180	103	16	26.8	46	50	40	3°	1.7	
1490 0 ※ 209195	-195	9	195	118	16	28.4	46	50	40	3°	1.7	L-4T
1490 0 ※ 210150	UTS6350 -PHC10S -150	10	150	72	17	24.6	46	50	40	3°	1.6	
1490 0 ※ 210165	-165	10	165	88	17	26.3	46	50	40	3°	1.6	
1490 0 ※ 210180	-180	10	180	103	17	27.8	46	50	40	3°	1.7	
1490 0 ※ 210195	-195	10	195	119	17	29.5	46	50	40	3°	1.7	
1490 0 ※ 211150	UTS6350 -PHC11S -150	11	150	73	18	25.7	46	50	40	3°	1.6	
1490 0 ※ 211165	-165	11	165	88	18	27.3	46	50	40	3°	1.6	
1490 0 ※ 211180	-180	11	180	104	18	29.0	46	50	40	3°	1.7	
1490 0 ※ 211195	-195	11	195	119	18	30.5	46	50	40	3°	1.8	
1490 0 ※ 212150	UTS6350 -PHC12S -150	12	150	73	19	26.7	46	70	40	3°	1.6	
1490 0 ※ 212165	-165	12	165	88	19	28.3	46	70	40	3°	1.6	
1490 0 ※ 212180	-180	12	180	104	19	30.0	46	70	40	3°	1.7	
1490 0 ※ 212195	-195	12	195	119	19	31.5	46	70	40	3°	1.8	
1490 0※216150	UTS6350 -PHC16S -150	16	150	72	23	30.6	52.5	75	40	3°		
1490 0※216180	-180	16	180	103	23	33.8	52.5	80	40	3°		
1490 0※216195	-195	16	195	119	23	35.5	52.5	80	40	3°		
1490 0※220150	UTS6350 -PHC20S -150	20	150	63	28	34.7	62	70	40	3°		
1490 0※220180	-180	20	180	93	28	37.8	62	100	40	3°		
1490 0※220195	-195	20	195	109	28	39.5	62	100	40	3°		
1490 0※225150	UTS6350 -PHC25S -150	25	150	65	37	43.9	62	70	50	3°		L-6T
1490 0※225180	-180	25	180	96	37	47.1	62	100	50	3°		
1490 0※225195	-195	25	195	112	37	48.8	62	110	50	3°		

When placing an order, please specify high or low pressure.
For high pressure type, please add (–H) on end of the description.

1. Tool shank diameter tolerance must be within h6.
2. Do not leave the holder with actuating screw tightened when the chuck is empty.

Tightening torque (Torque wrench : p.498)

model	I.D. (d) mm	Tightening torque (Nm)
PHC·S	06 ~ 12, 16	9 ~ 10
PHC·S	20 ~ 25	23 ~ 24

Ordering Example

Low pressure type

0 ~ 1.0MPa (UTS10080 : 0 ~ 2.0MPa)

UTS6350 - PHC 12 S - 150

Shank size | I.D. (d) | Projection length (L)

Ordering Example

High pressure type

1.1 ~ 7.0MPa (UTS10080 : 2.1 ~ 7.0MPa)

UTS6350 - PHC 12 S - 150 - H

Shank size | I.D. (d) | Projection length (L) | High pressure type

Hex. wrench
P. 095



Inch to Metric (mm) → Inch × 25.4
Metric (mm) to Inch → Metric ÷ 25.4 or Metric × 0.03937

Special / Custom Sizes on request

SRE

Shrink Fit (Small Diameter Type)

● Shrinkage method sets a cutting tool firmly by heating and cooling the chuck. High precision and strong chucking. (Small diameter type)

Type1

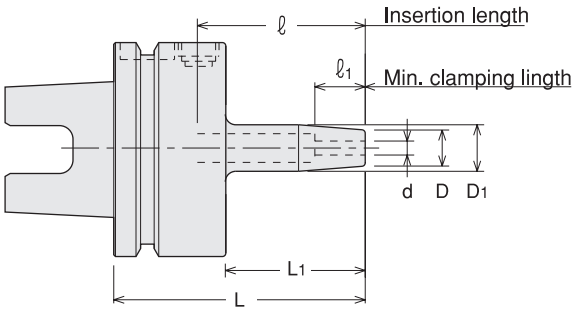

Type2

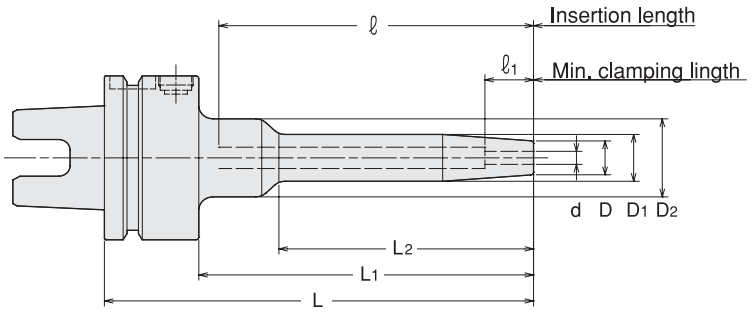

Metric Sizes

Unit : Metric

Code	Model	Type	d	L	L1	L2	D	D1	D2	ℓ1	ℓ
1300 51103060	UTS5040 -SRE3A -60-H	1	3	60	30	-	11.5	14.5	-	13	47
1300 51103090	-90-H	1	3	90	60	-	11.5	16.5	-	13	77
1300 51103120	-120-H	1	3	120	90	-	11.5	16.5	-	13	107
1300 51104060	UTS5040 -SRE4A -60-H	1	4	60	30	-	11.5	14.5	-	16	47
1300 51104090	-90-H	1	4	90	60	-	11.5	16.5	-	16	77
1300 51104120	-120-H	1	4	120	90	-	11.5	16.5	-	16	107
1300 51105060	UTS5040 -SRE5A -60-H	1	5	60	30	-	13	16	-	19	47
1300 51105090	-90-H	1	5	90	60	-	13	18	-	19	77
1300 51105120	-120-H	1	5	120	90	-	13	18	-	19	107
1300 51106060	UTS5040 -SRE6A -60-H	1	6	60	30	-	13	16	-	27	47
1300 51106090	-90-H	1	6	90	60	-	13	18	-	27	77
1300 51106120	-120-H	1	6	120	90	-	13	18	-	27	107
1300 51108060	UTS5040 -SRE8A -60-H	1	8	60	30	-	13	16	-	27	47
1300 51108090	-90-H	1	8	90	60	-	13	18	-	27	77
1300 51108120	-120-H	1	8	120	90	-	13	18	-	27	107
1300 5 ※ 203060	UTS6350 -SRE3A -60	1	3	60	27	-	11.5	14.5	-	13	47
1300 5 ※ 203090	-90	1	3	90	57	-	11.5	16.5	-	13	77
1300 5 ※ 203120	-120	1	3	120	87	-	11.5	16.5	-	13	107
1300 5 ※ 203150	-150	2	3	150	117	89	11.5	16.5	30	13	137
1300 5 ※ 204060	UTS6350 -SRE4A -60	1	4	60	27	-	11.5	14.5	-	16	47
1300 5 ※ 204090	-90	1	4	90	57	-	11.5	16.5	-	16	77
1300 5 ※ 204120	-120	1	4	120	87	-	11.5	16.5	-	16	107
1300 5 ※ 204150	-150	2	4	150	117	89	11.5	16.5	30	16	137
1300 5 ※ 205060	UTS6350 -SRE5A -60	1	5	60	27	-	13	16	-	19	47
1300 5 ※ 205090	-90	1	5	90	57	-	13	18	-	19	77
1300 5 ※ 205120	-120	1	5	120	87	-	13	18	-	19	107
1300 5 ※ 205150	-150	2	5	150	117	89	13	18	30	19	137
1300 5 ※ 206060	UTS6350 -SRE6A -60	1	6	60	27	-	13	16	-	19	47
1300 5 ※ 206090	-90	1	6	90	57	-	13	18	-	27	77
1300 5 ※ 206120	-120	1	6	120	87	-	13	18	-	27	107
1300 5 ※ 206150	-150	2	6	150	117	89	13	18	30	27	137
1300 5 ※ 208060	UTS6350 -SRE8A -60	1	8	60	27	-	13	16	-	19	47
1300 5 ※ 208090	-90	1	8	90	57	-	13	18	-	27	77
1300 5 ※ 208120	-120	1	8	120	87	-	13	18	-	27	107
1300 5 ※ 208150	-150	2	8	150	117	89	13	18	30	27	137

Inch to Metric (mm) → Inch × 25.4
Metric (mm) to Inch → Metric ÷ 25.4 or Metric × 0.03937

Special / Custom Sizes on request

Metric Sizes

Unit : Metric

Code	Model	Type	d	L	L1	L2	D	D1	D2	ℓ1	ℓ
1300 5 ※ 303090	UTS10080 -SRE3A -90	1	3	90	56	-	11.5	16.5	-	13	77
1300 5 ※ 303120	-120	1	3	120	86	-	11.5	16.5	-	13	107
1300 5 ※ 303135	-135	2	3	135	101	59	11.5	16.5	30	13	122
1300 5 ※ 303165	-165	2	3	165	131	89	11.5	16.5	30	13	152
1300 5 ※ 304090	UTS10080 -SRE4A -90	1	4	90	56	-	11.5	16.5	-	16	77
1300 5 ※ 304120	-120	1	4	120	86	-	11.5	16.5	-	16	107
1300 5 ※ 304135	-135	2	4	135	101	59	11.5	16.5	30	16	122
1300 5 ※ 304165	-165	2	4	165	131	89	11.5	16.5	30	16	152
1300 5 ※ 305090	UTS10080 -SRE5A -90	1	5	90	56	-	13	18	-	19	77
1300 5 ※ 305120	-120	1	5	120	86	-	13	18	-	19	107
1300 5 ※ 305135	-135	2	5	135	101	59	13	18	30	19	122
1300 5 ※ 305165	-165	2	5	165	131	89	13	18	30	19	152
1300 5 ※ 306090	UTS10080 -SRE6A -90	1	6	90	56	-	13	18	-	27	77
1300 5 ※ 306120	-120	1	6	120	86	-	13	18	-	27	107
1300 5 ※ 306135	-135	2	6	135	101	59	13	18	30	27	122
1300 5 ※ 306165	-165	2	6	165	131	89	13	18	30	27	152
1300 5 ※ 308090	UTS10080 -SRE8A -90	1	8	90	56	-	13	18	-	27	77
1300 5 ※ 308120	-120	1	8	120	86	-	13	18	-	27	107
1300 5 ※ 308135	-135	2	8	135	101	59	13	18	30	27	122
1300 5 ※ 308165	-165	2	8	165	131	89	13	18	30	27	152

When placing an order, please specify high or low pressure. For high pressure type, please add (–H) on end of the description.

1.Always use carbide shank tools with h6 tolerance.
2.UTS5040 is available in high pressure only.
3.Center through coolant is not possible with SRE3A and SRE4A.

Heating device chart

heating device	chuck	
	L1 ≦ 60mm	L1 ＞ 60mm
ISG3400	Yes *	Yes
SRK-HA1, HB2	No	No

*Special induction coil is needed. Refer to P.500-501.

Ordering Example

Low pressure type

0 ~ 1.0MPa (UTS10080 : 0 ~ 2.0MPa)

UTS6350 - SRE 6 A - 90

Shank size | I.D. (d) | Projection length (L)

Ordering Example

High pressure type

1.1 ~ 7.0MPa (UTS10080 : 2.1 ~ 7.0MPa)

UTS6350 - SRE 6 A - 90 - H

Shank size | I.D. (d) | Projection length (L) | High pressure type

SRK

Shrink Fit (Heavy Type)

● Shrinkage method sets a cutting tool firmly by heating and cooling the chuck. High precision, rigidity and strong chucking. (Heavy Type)

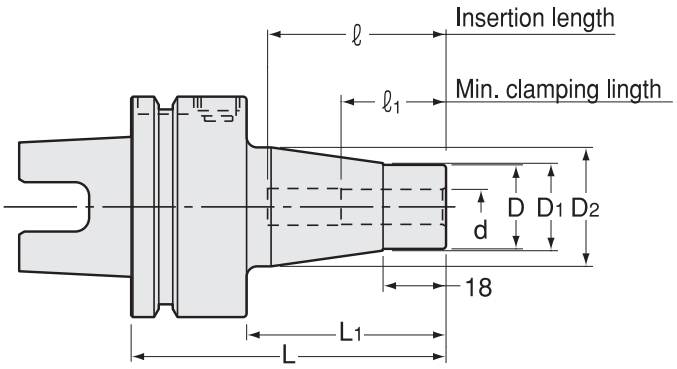

Metric Sizes

Unit : Metric

Code	Model	d	L	L1	D	D1	D2	ℓ1	ℓ
1300 01106090	UTS5040 -SRK 6A -90-H	6	90	60	16	17	30	26	26 ~ 36
1300 01108090	UTS5040 -SRK 8A -90-H	8	90	60	19	20	32	26	26 ~ 50
1300 01110085	UTS5040 -SRK10A -85-H	10	85	55	24	25	34	32	32 ~ 50
1300 01112090	UTS5040 -SRK12A -90-H	12	90	60	28	29	34	37	37 ~ 65
1300 01116095	UTS5040 -SRK16A -95-H	16	95	65	32	33	34	40	40 ~ 70
1300 01120100	UTS5040 -SRK20A -100-H	20	100	70	36	37	42	42	42 ~ 75
1300 0 ※ 206090	UTS6350 -SRK 6A -90	6	90	57	16	17	30	26	26 ~ 36
1300 0 ※ 208090	UTS6350 -SRK 8A -90	8	90	57	19	20	32	26	26 ~ 50
1300 0 ※ 210085	UTS6350 -SRK10A -85	10	85	52	24	25	34	32	32 ~ 50
1300 0 ※ 212090	UTS6350 -SRK12A -90	12	90	57	28	29	34	37	37 ~ 63
1300 0 ※ 216095	UTS6350 -SRK16A -95	16	95	62	32	33	34	40	40 ~ 65
1300 0 ※ 220100	UTS6350 -SRK20A -100	20	100	67	36	37	42	42	42 ~ 72
1300 0 ※ 225115	UTS6350 -SRK25A -115	25	115	82	46	47	53	48	48 ~ 89
1300 0 ※ 306090	UTS10080 -SRK 6A -90	6	90	56	16	17	30	26	26 ~ 36
1300 0 ※ 308090	UTS10080 -SRK 8A -90	8	90	56	19	20	32	26	26 ~ 50
1300 0 ※ 310090	UTS10080 -SRK10A -90	10	90	56	24	25	34	32	32 ~ 50
1300 0 ※ 312095	UTS10080 -SRK12A -95	12	95	61	28	29	34	37	37 ~ 62
1300 0 ※ 316100	UTS10080 -SRK16A -100	16	100	66	32	33	34	40	40 ~ 65
1300 0 ※ 320105	UTS10080 -SRK20A -105	20	105	71	36	37	42	42	42 ~ 70
1300 0 ※ 325115	UTS10080 -SRK25A -115	25	115	81	46	47	53	48	48 ~ 80
1300 0 ※ 332120	UTS10080 -SRK32A -120	32	120	86	56	57	70	51	51 ~ 85

When placing an order, please specify high or low pressure. For high pressure type, please add (–H) on end of the description.

1.Always use carbide shank tools with h6 tolerance.
2.UTS5040 is available in high pressure only.

Heating device chart		
heating device	chuck	
	SRK6A, SRK8A	SRK10A~SRK32A
ISG3400	Yes	Yes *
SRK-HA1, HB2	No	Yes

*Special induction coil is needed. Refar to P.500-501.

Ordering Example

Low pressure type

0 ~ 1.0MPa (UTS10080 : 0 ~ 2.0MPa)

UTS6350 - SRK 10 A - 85

Shank size | I.D. (d) | Projection length (L)

Ordering Example

High pressure type

1.1 ~ 7.0MPa (UTS10080 : 2.1 ~ 7.0MPa)

UTS6350 - SRK 10 A - 85 - H

Shank size | I.D. (d) | Projection length (L) | High pressure type

Inch to Metric (mm) → Inch × 25.4
Metric (mm) to Inch → Metric ÷ 25.4 or Metric × 0.03937

Special / Custom Sizes on request

SRS

Shrink Fit (Slim Type)

● Shrinkage method sets a cutting tool firmly by heating and cooling the chuck. High precision and strong chucking. (Slim Type)

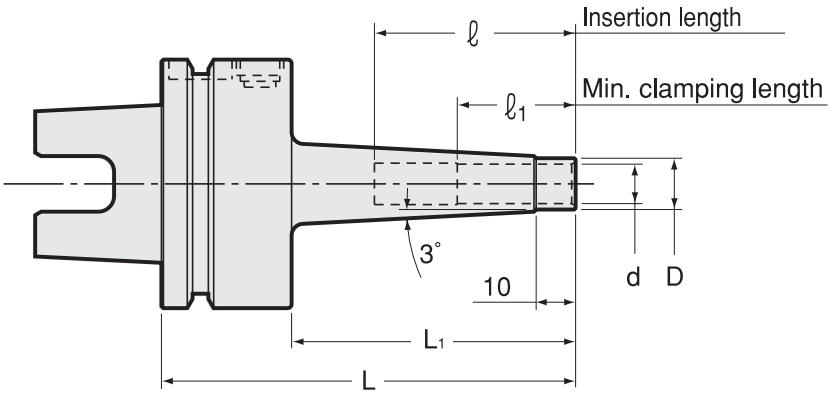

Metric Sizes

Unit : Metric

Code	Model			d	L	L1	D	ℓ1	ℓ
1300 31106090	UTS5040	-SRS6A	-90-H	6	90	60	9	26	26 ~ 36
1300 31106120			-120-H	6	120	90	9	26	26 ~ 36
1300 31108090	UTS5040	-SRS8A	-90-H	8	90	60	11	26	26 ~ 50
1300 31108120			-120-H	8	120	90	11	26	26 ~ 50
1300 31110105	UTS5040	-SRS10A	-105-H	10	105	75	13	32	32 ~ 50
1300 31110135			-135-H	10	135	105	13	32	32 ~ 50
1300 31112105	UTS5040	-SRS12A	-105-H	12	105	75	15	37	37 ~ 65
1300 31112135			-135-H	12	135	105	15	37	37 ~ 70
1300 31116105	UTS5040	-SRS16A	-105-H	16	105	75	20	40	40 ~ 80
1300 31116135			-135-H	16	135	105	20	40	40 ~ 80
1300 31120105	UTS5040	-SRS20A	-105-H	20	105	75	26	42	42 ~ 80
1300 31120135			-135-H	20	135	105	26	42	42 ~ 100
1300 3 ※ 206105	UTS6350	-SRS6A	-105	6	105	72	9	26	26 ~ 36
1300 3 ※ 206135			-135	6	135	102	9	26	26 ~ 36
1300 3 ※ 206165			-165	6	165	132	9	26	26 ~ 36
1300 3 ※ 208105	UTS6350	-SRS8A	-105	8	105	72	11	26	26 ~ 50
1300 3 ※ 208135			-135	8	135	102	11	26	26 ~ 50
1300 3 ※ 208165			-165	8	165	132	11	26	26 ~ 50
1300 3 ※ 210105	UTS6350	-SRS10A	-105	10	105	72	13	32	32 ~ 50
1300 3 ※ 210135			-135	10	135	102	13	32	32 ~ 50
1300 3 ※ 210165			-165	10	165	132	13	32	32 ~ 50
1300 3 ※ 212105	UTS6350	-SRS12A	-105	12	105	72	15	37	32 ~ 70
1300 3 ※ 212135			-135	12	135	102	15	37	32 ~ 70
1300 3 ※ 212165			-165	12	165	132	15	37	32 ~ 70
1300 3 ※ 216105	UTS6350	-SRS16A	-105	16	105	72	20	40	40 ~ 75
1300 3 ※ 216135			-135	16	135	102	20	40	40 ~ 80
1300 3 ※ 216165			-165	16	165	132	20	40	40 ~ 80
1300 3 ※ 220105	UTS6350	-SRS20A	-105	20	105	72	26	42	42 ~ 75
1300 3 ※ 220135			-135	20	135	102	26	42	42 ~ 100
1300 3 ※ 220165			-165	20	165	132	26	42	42 ~ 100
1300 3 ※ 306105	UTS10080	-SRS6A	-105	6	105	71	9	26	26 ~ 36
1300 3 ※ 306135			-135	6	135	101	9	26	26 ~ 36
1300 3 ※ 306165			-165	6	165	131	9	26	26 ~ 36
1300 3 ※ 308105	UTS10080	-SRS8A	-105	8	105	71	11	26	26 ~ 50
1300 3 ※ 308135			-135	8	135	101	11	26	26 ~ 50
1300 3 ※ 308165			-165	8	165	131	11	26	26 ~ 50
1300 3 ※ 310105	UTS10080	-SRS10A	-105	10	105	71	13	32	32 ~ 50
1300 3 ※ 310135			-135	10	135	101	13	32	32 ~ 50
1300 3 ※ 310165			-165	10	165	131	13	32	32 ~ 50
1300 3 ※ 310195			-195	10	195	161	13	32	32 ~ 50

Inch to Metric (mm) → Inch × 25.4
Metric (mm) to Inch → Metric ÷ 25.4 or Metric × 0.03937

Special / Custom Sizes on request

Metric Sizes

Unit : Metric

Code	Model			d	L	L1	D	ℓ1	ℓ
1300 3 ※ 312105	**UTS10080**	**-SRS12A**	**-105**	12	105	71	15	37	37 ~ 70
1300 3 ※ 312135			**-135**	12	135	101	15	37	37 ~ 70
1300 3 ※ 312165			**-165**	12	165	131	15	37	37 ~ 70
1300 3 ※ 312195			**-195**	12	195	161	15	37	37 ~ 70
1300 3 ※ 316105	**UTS10080**	**-SRS16A**	**-105**	16	105	71	20	40	40 ~ 70
1300 3 ※ 316135			**-135**	16	135	101	20	40	42 ~ 80
1300 3 ※ 316165			**-165**	16	165	131	20	40	42 ~ 80
1300 3 ※ 316195			**-195**	16	195	161	20	40	42 ~ 80
1300 3 ※ 320105	**UTS10080**	**-SRS20A**	**-105**	20	105	71	26	42	42 ~ 70
1300 3 ※ 320135			**-135**	20	135	101	26	42	42 ~ 100
1300 3 ※ 320165			**-165**	20	165	131	26	42	42 ~ 100
1300 3 ※ 320195			**-195**	20	195	161	26	42	42 ~ 100

When placing an order, please specify high or low pressure. For high pressure type, please add (–H) on end of the description.

1.Always use carbide shank tools with h6 tolerance.
2.UTS5040 is available in high pressure only.

Heating device chart

heating device	chuck	
	SRS0250A, SRS0312A SRS6A, SRS8A	SRS0375A~SRS0750A SRS10A~SRS20A
ISG3400	Yes	Yes
SRK-HA1, HB2	No	Yes

Ordering Example

Low pressure type
0 ~ 1.0MPa (UTS10080 : 0 ~ 2.0MPa)

UTS6350 - **SRS** **10** **A** - **105**
Shank size / I.D. (d) / Projection length (L)

Ordering Example

High pressure type
1.1 ~ 7.0MPa (UTS10080 : 2.1 ~ 7.0MPa)

UTS6350 - **SRS** **10** **A** - **105** - **H**
Shank size / I.D. (d) / Projection length (L) / High pressure type

Inch to Metric (mm) → Inch × 25.4
Metric (mm) to Inch → Metric ÷ 25.4 or Metric × 0.03937

Special / Custom Sizes on request

MEMO

STM

Synchronous Tap Holder With Easy Tool Length Adjustment

● Projection length of the cutting tool can be adjusted by simply turning circumference of the holder.

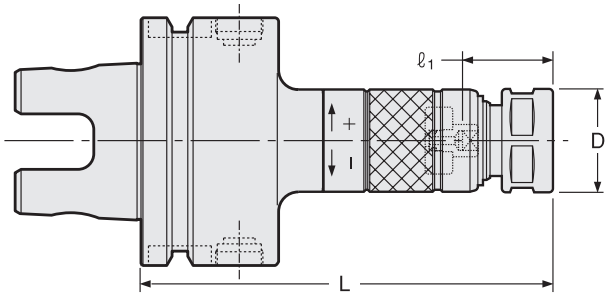

⚠ For capable tap sizes, please refer to P.462-464 chart.

(NOTE) Nut O.D. of STM8 is 19mm.

STM Holder + **Collet** + **STS Driver**

Unit : Metric

Code	Model	Tap Size	L	D	Nut	kg	Collet	Preset Driver	Spanner
1370 00400090	UTS5040 -STM8 -90H	Old JIS Taps M4 ~ 8 U No8 ~ 5/16 OSG Synchro Taps M4 ~ 6	90	21	KDP-1414		FDC-07	STS-8	Flat 17mm width
1370 00400105	-105H		105	21	KDP-1414				
1370 00400120	-120H		120	21	KDP-1414				
1370 10400090	UTS5040 -STM12 -90H	Old JIS Taps M4 ~ 12 U No8 ~ 7/16 PT1/8 OSG Synchro Taps M4 ~ 10	90	26	HTP-09		FSC-09	STS-12	S-1L
1370 10400105	-105H		105	26	HTP-09				
1370 10400120	-120H		120	26	HTP-09				
1370 30400105	UTS5040 -STM18 -105H	Old JIS Taps M14 ~ 18 U1/2 ~ 3/4 PT1/4 ~ 3/8 OSG Synchro Taps M12 ~ 14	105	36	HTP-16		FSC-16	STS-18	S-4L
1370 30400120	-120H		120	36	HTP-16				
1370 30400135	-135H		135	36	HTP-16				
1370 30400150	-150H		150	36	HTP-16				
1370 40400120	UTS5040 -STM30 -120H	Old JIS Taps M20 ~ 30 U7/8 ~ 1-1/8 PT1/2 ~ 3/4 OSG Synchro Taps M16 ~ 27	120	46	HTP-22		FSC-22	STS-30	S-5L
1370 40400135	-135H		135	46	HTP-22				
1370 40400150	-150H		150	46	HTP-22				
1370 00 ※ 00090	UTS6350 -STM8 -90 ＊	Old JIS Taps M4 ~ 8 U No8 ~ 5/16 OSG Synchro Taps M4 ~ 6	90	21	KDP-1414		FDC-07	STS-8	Flat 17mm width
1370 00 ※ 00105	-105		105	21	KDP-1414				
1370 00 ※ 00120	-120		120	21	KDP-1414				
1370 00 ※ 00135	-135		135	21	KDP-1414				
1370 00 ※ 00150	-150		150	21	KDP-1414				
1370 10 ※ 00090	UTS6350 -STM12 -90 ＊	Old JIS Taps M4 ~ 12 U No8 ~ 7/16 PT1/8 OSG Synchro Taps M4 ~ 10	90	26	HTP-09		FSC-09	STS-12	S-1L
1370 10 ※ 00105	-105		105	26	HTP-09	1.1			
1370 10 ※ 00120	-120		120	26	HTP-09				
1370 10 ※ 00135	-135		135	26	HTP-09				
1370 10 ※ 00150	-150		150	26	HTP-09				
1370 10 ※ 00180	-180		180	26	HTP-09				
1370 30 ※ 00105	UTS6350 -STM18 -105	Old JIS Taps M14 ~ 18 U1/2 ~ 3/4 PT1/4 ~ 3/8 OSG Synchro Taps M12 ~ 14	105	36	HTP-16	1.2	FSC-16	STS-18	S-4L
1370 30 ※ 00120	-120		120	36	HTP-16				
1370 30 ※ 00135	-135		135	36	HTP-16				
1370 30 ※ 00150	-150		150	36	HTP-16				
1370 30 ※ 00180	-180		180	36	HTP-16				
1370 40 ※ 00120	UTS6350 -STM30 -120	Old JIS Taps M20 ~ 30 U7/8 ~ 1-1/8 PT1/2 ~ 3/4 OSG Synchro Taps M16 ~ 27	120	46	HTP-22		FSC-22	STS-30	S-5L
1370 40 ※ 00135	-135		135	46	HTP-22				
1370 40 ※ 00150	-150		150	46	HTP-22				
1370 40 ※ 00180	-180		180	46	HTP-22				
1370 00 ※ 00090	UTS10080 -STM8 -90 ＊	Old JIS Taps M4 ~ 8 U No8 ~ 5/16 OSG Synchro Taps M4 ~ 6	90	21	KDP-1414		FDC-07	STS-8	Flat 17mm width
1370 00 ※ 00105	-105		105	21	KDP-1414				
1370 00 ※ 00120	-120		120	21	KDP-1414				
1370 00 ※ 00135	-135		135	21	KDP-1414				
1370 00 ※ 00150	-150		150	21	KDP-1414				
1370 00 ※ 00165	-165		165	21	KDP-1414				
1370 10 ※ 00090	UTS10080 -STM12 -90 ＊	Old JIS Taps M4 ~ 12 U No8 ~ 7/16 PT1/8 OSG Synchro Taps M4 ~ 10	90	26	HTP-09		FSC-09	STS-12	S-1L
1370 10 ※ 00105	-105		105	26	HTP-09				
1370 10 ※ 00120	-120		120	26	HTP-09				
1370 10 ※ 00135	-135		135	26	HTP-09				
1370 10 ※ 00150	-150		150	26	HTP-09	2.8			
1370 10 ※ 00180	-180		180	26	HTP-09				
1370 30 ※ 00105	UTS10080 -STM18 -105	Old JIS Taps M14 ~ 18 U1/2 ~ 3/4 PT1/4 ~ 3/8 OSG Synchro Taps M12 ~ 14	105	36	HTP-16	2.7	FSC-16	STS-18	S-4L
1370 30 ※ 00120	-120		120	36	HTP-16				
1370 30 ※ 00135	-135		135	36	HTP-16				
1370 30 ※ 00150	-150		150	36	HTP-16	3.0			
1370 30 ※ 00180	-180		180	36	HTP-16				
1370 40 ※ 00120	UTS10080 -STM30 -120	Old JIS Taps M20 ~ 30 U7/8 ~ 1-1/8 PT1/2 ~ 3/4 OSG Synchro Taps M16 ~ 27	120	46	HTP-22		FSC-22	STS-30	S-5L
1370 40 ※ 00135	-135		135	46	HTP-22				
1370 40 ※ 00150	-150		150	46	HTP-22				
1370 40 ※ 00180	-180		180	46	HTP-22				
1370 40 ※ 00210	-210		210	46	HTP-22				

Inch to Metric (mm) → Inch × 25.4
Metric (mm) to Inch → Metric ÷ 25.4 or Metric × 0.03937

Special / Custom Sizes on request

When placing an order, please specify high or low pressure. For high pressure type, please add (–H) on end of the description.

1.Collet, spanner and preset driver are sold separately.
2.Please see below for ℓ1dimension.
3.Tap holes smaller than M4 can be made by STM8. Collets to be used are as follows.
M1-M2.6: FDC-03007- ※※ M3-M3.5: FDC-04007- ※※
Tap drive will not be used for the above usages.
4.UTS5040 is available in high pressure only.

Collet
P. 414
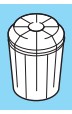

Preset driver
P. 412 - 413
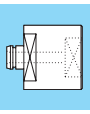

Ordering Example

Low pressure type
0 ~ 1.0MPa (UTS10080 : 0 ~ 2.0MPa)

UTS6350 - **STM** **12** - **90**
Shank size / Holder soze / Projection length (L)

Ordering Example

High pressure type
1.1 ~ 7.0MPa (UTS10080 : 2.1 ~ 7.0MPa)

UTS6350 - **STM** **12** - **90** - **H**
Shank size / Holder soze / Projection length (L) / High pressure type

ℓ1 Dimension for STM

Old JIS Taps

Without center-through coolant

Tap Size	ℓ1	ℓ1(＊)
M4 ～ 6 U No.8 ～ 1/4	21 ～ 35	21 ～ 26
M7 ～ 12 U 5/16 ～ U7/16 PT1/8	23 ～ 37	23 ～ 28
M13 ～ 15 U 1/2 ～ 5/8 PT1/4	28 ～ 42	-
M16 ～ 17	32 ～ 45	-
M18 ～ 27 U 3/4 ～ U1 PT3/8 ～ 5/8	33 ～ 47	-
M30 U1-1/8 PT3/4	38 ～ 52	-

With center-through coolant (STM8)

Tap Size	ℓ1	ℓ1(＊)
M4 ～ 6 U No.8 ～ 1/4	25 ～ 35	25 ～ 26
M7 ～ 8 U5/16	26 ～ 37	26 ～ 28

With center-through coolant (STM12 ～ 30)

Tap Size	ℓ1	ℓ1(＊)
M4 ～ 6 U No.8 ～ 1/4	24 ～ 35	24 ～ 26
M7 ～ 10 U 5/16 ～ 3/8	25 ～ 37	25 ～ 28
M11 ～ 12 U 7/16 PT 1/8	26 ～ 37	26 ～ 28
U1/2	32 ～ 42	-
M13 ～ 15 U9/16	33 ～ 42	-
U5/8 PT1/4	34 ～ 42	-
M16	35 ～ 46	-
M18 U 3/4 PT3/8	36 ～ 47	-
M20 ～ 21 PT1/2	40 ～ 47	-
M22 U 7/8	41 ～ 47	-
M23	42 ～ 47	-
M24 ～ 25 PT5/8	43 ～ 47	-
M26 ～ 27 U1	44 ～ 47	-
M28	45 ～ 52	-
M30 PT3/4	46 ～ 52	-
U 1-1/8	48 ～ 52	-

OSG Synchro Taps

Without center-through coolant

Tap Size	ℓ1	ℓ1(＊)
M4 ～ 6	21 ～ 35	21 ～ 26
M8 ～ 10	23 ～ 37	23 ～ 28
M12 ～ 14	28 ～ 42	-
M16 ～ 27	33 ～ 47	-

With center-through coolant (STM8)

Tap Size	ℓ1	ℓ1(＊)
M4 ～ 6	25 ～ 35	25 ～ 26

With center-through coolant (STM12 ～ 30)

Tap Size	ℓ1	ℓ1(＊)
M4 ～ 6	24 ～ 35	24 ～ 26
M8 ～ 10	26 ～ 37	26 ～ 28
M12	33 ～ 42	-
M14	34 ～ 42	-
M16 ～ 20	40 ～ 46	-
M22 ～ 27	44 ～ 47	-

YAMAWA X Series

Without center-through coolant

Tap Size	ℓ1	ℓ1(＊)
M6 M8	23 ～ 37	23 ～ 28
M10 M12	28 ～ 42	-

With center-through coolant (STM8)

Tap Size	ℓ1	ℓ1(＊)
M6	26 ～ 37	26 ～ 28

With center-through coolant (STM12 ～ 30)

Tap Size	ℓ1	ℓ1(＊)
M6	25 ～ 37	25 ～ 28
M8	26 ～ 37	26 ～ 28
M10	33 ～ 42	-
M12	34 ～ 42	-

Inch to Metric (mm) → Inch × 25.4
Metric (mm) to Inch → Metric ÷ 25.4 or Metric × 0.03937

Special / Custom Sizes on request

Tap size reference chart (collet, preset driver)

FDC-07 or FSC - collet

OH Type

● OH type collet should be used for center-through coolant feeding and external coolant feeding.

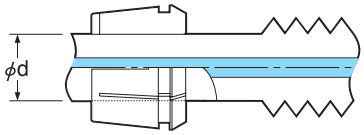

C Type

● when "collet-through" coolant feeding is needed.

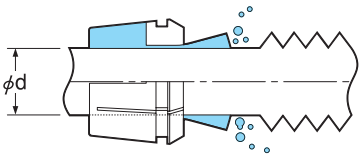

B : Square dimension **ød : Shank dimension**

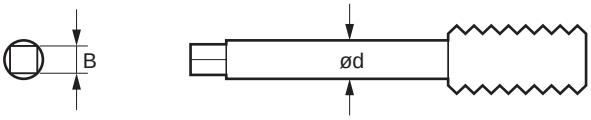

※ Please select OH type for non-coolant use.

preset driver & tool for changing driver

STS Type

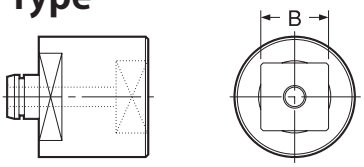

STS-R Type

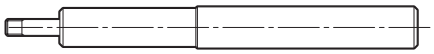

Holder Model	Tap Size (ANSI)	ød (inch)	ød (mm)	Collet Model (OH or C)	B (inch)	B (mm)	Preset Driver
STM8	#0-6	0.141	3.5814	FDC-03607**	0.110	2.794	STS8- □ 2.8
	#8	0.168	4.2672	FDC-04307**	0.131	3.3274	STS8- □ 3.4
	#10	0.194	4.9276	FDC-05007**	0.152	3.8608	STS8- □ 4.0
	#12	0.22	5.588	FDC-05607**	0.165	4.191	STS8- □ 4.2
	1/4	0.255	6.477	FDC-06507**	0.191	4.8514	STS8- □ 5.0
STM12	#0-6	0.141	3.5814	FSC-09-3.6**	0.110	2.794	STS12- □ 2.8
	#8	0.168	4.2672	FSC-09-4.3**	0.131	3.3274	STS12- □ 3.4
	#10	0.194	4.9276	FSC-09-5.0**	0.152	3.8608	STS12- □ 4.0
	#12	0.22	5.588	FSC-09-5.6**	0.165	4.191	STS12- □ 4.2
	1/4	0.255	6.477	FSC-09-6.5**	0.191	4.8514	STS12- □ 5.0
	1/8SPT	0.313	7.9502	FSC-09-8.0**	0.234	5.9436	STS12- □ 6.0
	5/16	0.318	8.0772	FSC-09-8.1**	0.238	6.0452	STS12- □ 6.1
	7/16	0.323	8.2042	FSC-09-8.3**	0.242	6.1468	STS12- □ 6.2
STM18	1/2	0.367	9.3218	FSC-16-9.4**	0.275	6.985	STS18- □ 7.0
	3/8	0.381	9.6774	FSC-16-9.7**	0.286	7.2644	STS18- □ 7.3
	9/16	0.429	10.8966	FSC-16-10.9**	0.322	8.1788	STS18- □ 8.2
	1/8LPT	0.437	11.0998	FSC-16-11.1**	0.328	8.3312	STS18- □ 8.4
	5/8	0.48	12.192	FSC-16-12.2**	0.360	9.144	STS18- □ 9.2
	11/16	0.542	13.7668	FSC-16-13.8**	0.406	10.3124	STS18- □ 10.4
	1/4PT	0.562	14.2748	FSC-16-14.3**	0.421	10.6934	STS18- □ 10.7
STM30	3/4	0.59	14.986	FSC-22-15.0**	0.442	11.2268	STS30- □ 11.3
	13/16	0.652	16.5608	FSC-22-16.6**	0.489	12.4206	STS30- □ 12.5
	7/8	0.697	17.7038	FSC-22-17.8**	0.523	13.2842	STS30- □ 13.3
	3/8PT	0.7	17.78	FSC-22-17.8**	0.531	13.4874	STS30- □ 13.5
	1	0.8	20.32	FSC-22-20.4**	0.600	15.24	STS30- □ 15.3

For DIN and ISO, please refer to P.463-464.

Ordering Example

FSC - 22 - 20.4 - OH

- 22: Collet size
- 20.4: Collet I.D. (d)
- OH: for tool with coolant hole
- C: for collet through

Combination of accessories

Tap holder	Collet	Preset driver		Nut		Tool changing driver		Spanner	
Model	Model	Model	Code	Model	Code	Model	Code	Model	Code
STM8	**FDC-07**	STS8	3914 0100**03	KDP-1414	0070 01001407	**STS-R0**	3914 00000006	**Flat 17mm width**	
STM12	**FSC-09**	STS12	3914 1100**03	**HTP-09**	1314 00000009	**STS-R1**	3914 10000006	**S-1L**	0803 00000011
STM18	**FSC-16**	STS18	3914 310***03	**HTP-16**	1314 00000016	**STS-R2**	3914 30000006	**S-4L**	0803 00000014
STM30	**FSC-22**	STS30	3914 410***03	**HTP-22**	1314 00000022	**STS-R2**	3914 30000006	**S-5L**	0803 00000015

Inch to Metric (mm) → Inch × 25.4
Metric (mm) to Inch → Metric ÷ 25.4 or Metric × 0.03937

Special / Custom Sizes on request

Tap size reference chart (collet, preset driver)

FDC-07 or FSC - collet

OH Type

● OH type collet should be used for center-through coolant feeding and external coolant feeding.

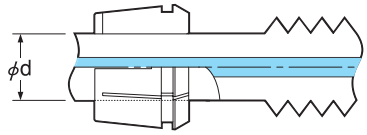

C Type

● when "collet-through" coolant feeding is needed.

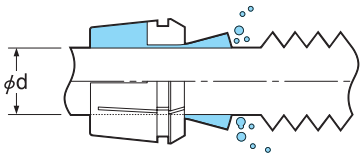

※ Please select OH type for non-coolant use.

preset driver & tool for changing driver

STS Type

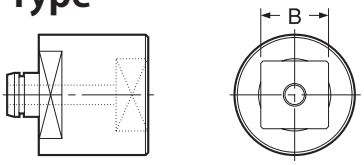

STS-R Type

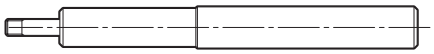

Holder Model	Tap Size					ød	Collet Model (OH or C)	B	Preset Driver	Tool for Changing Driver
	Old JIS Taps			OSG Synchro-Taps	YAMAWA X Series					
	Metric Thread	Unified Thread	Pipe Taper Thread							
STM8	M4~M4.5	UNo.8				5.0	FDC-05007-**	4.0	STS8-□4.0	STS-R0
	M5~M5.5	UNo.10~12				5.5	FDC-05507-**	4.5	STS8-□4.5	STS-R0
	M6	U1/4		M4~M6		6.0	FDC-06007-**	4.5	STS8-□4.5	STS-R0
					M6	6.0	FDC-06007-**	4.9	STS8-□4.9	STS-R0
		U5/16				6.1	FDC-06107-**	5.0	STS8-□5.0	STS-R0
	M7~8					6.2	FDC-06207-**	5.0	STS8-□5.0	STS-R0
STM12	M4~M4.5	UNo.8				5.0	FSC-09-5.0-**	4.0	STS12-□4.0	STS-R1
	M5~M5.5	UNo.10~12				5.5	FSC-09-5.5-**	4.5	STS12-□4.5	STS-R1
	M6	U1/4		M4~M6		6.0	FSC-09-6.0-**	4.5	STS12-□4.5	STS-R1
					M6	6.0	FSC-09-6.0-**	4.9	STS12-□4.9	STS-R1
		U5/16				6.1	FSC-09-6.1-**	5.0	STS12-□5.0	STS-R1
	M7~8					6.2	FSC-09-6.2-**	5.0	STS12-□5.0	STS-R1
	M9~M10	U3/8				7.0	FSC-09-7.0-**	5.5	STS12-□5.5	STS-R1
					M8	8.0	FSC-09-8.0-**	6.2	STS12-□6.2	STS-R1
	M11	U7/16	PT1/16~1/8	M8~M10		8.0	FSC-09-8.0-**	6.0	STS12-□6.0	STS-R1
	M12					8.5	FSC-09-8.5-**	6.5	STS12-□6.5	STS-R1
STM18		U1/2				9.0	FSC-16-9.0-**	7.0	STS18-□7.0	STS-R2
	M13					9.5	FSC-16-9.5-**	7.0	STS18-□7.0	STS-R2
				M12	M10	10.0	FSC-16-10.0-**	8.0	STS18-□8.0	STS-R2
	M14~15	U9/16				10.5	FSC-16-10.5-**	8.0	STS18-□8.0	STS-R2
			PT1/4			11.0	FSC-16-11.0-**	9.0	STS18-□9.0	STS-R2
		U5/8		M14	M12	12.0	FSC-16-12.0-**	9.0	STS18-□9.0	STS-R2
	M16					12.5	FSC-16-12.5-**	10.0	STS18-□10.0	STS-R2
	M17					13.0	FSC-16-13.0-**	10.0	STS18-□10.0	STS-R2
	M18~M19	U3/4	PT3/8			14.0	FSC-16-14.0-**	11.0	STS18-□11.0	STS-R2
STM30	M20					15.0	FSC-22-15.0-**	12.0	STS30-□12.0	STS-R2
	M21			M16~M20		16.0	FSC-22-16.0-**	12.0	STS30-□12.0	STS-R2
	M22	U7/8				17.0	FSC-22-17.0-**	13.0	STS30-□13.0	STS-R2
	M23		PT1/2			18.0	FSC-22-18.0-**	14.0	STS30-□14.0	STS-R2
	M24~M25		PT5/8			19.0	FSC-22-19.0-**	15.0	STS30-□15.0	STS-R2
	M26~M27	U1		M22~M27		20.0	FSC-22-20.0-**	15.0	STS30-□15.0	STS-R2
	M28					21.0	FSC-22-21.0-**	17.0	STS30-□17.0	STS-R2
		U1-1/8				22.0	FSC-22-22.0-**	17.0	STS30-□17.0	STS-R2
	M30		PT3/4			23.0	FSC-22-23.0-**	17.0	STS30-□17.0	STS-R2

Ordering Example

FSC - 22 - 20.0 - OH

- 22: Collet size
- 20.0: Collet I.D. (d)
- OH: for tool with coolant hole; C: for collet through

Combination of accessories

Tap holder	Collet	Preset driver		Nut		Tool changing driver		Spanner	
Model	Model	Model	Code	Model	Code	Model	Code	Model	Code
STM8	FDC-07	STS8	3914 0100**03	KDP-1414	0070 01001407	STS-R0	3914 00000006	Flat 17mm width	
STM12	FSC-09	STS12	3914 1100**03	HTP-09	1314 00000009	STS-R1	3914 10000006	S-1L	0803 00000011
STM18	FSC-16	STS18	3914 310***03	HTP-16	1314 00000016	STS-R2	3914 30000006	S-4L	0803 00000014
STM30	FSC-22	STS30	3914 410***03	HTP-22	1314 00000022	STS-R2	3914 30000006	S-5L	0803 00000015

Inch to Metric (mm) → Inch × 25.4
Metric (mm) to Inch → Metric ÷ 25.4 or Metric × 0.03937

Special / Custom Sizes on request

FSC

Collet For Tapper

FSC-OH

For tool with coolant hole

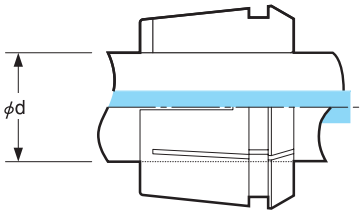

Tool Shank Dia.		Size	Code
ød (inch)	ød (mm)		
ø 0.141	ø 3.6	**FSC-09-3.6-OH**	—
ø 0.168	ø 4.3	**FSC-09-4.3-OH**	1334 00104309
ø 0.194	ø 5.0	**FSC-09-5.0-OH**	1334 00105009
ø 0.220	ø 5.6	**FSC-09-5.6-OH**	1334 00105609
ø 0.216	ø 5.5	**FSC-09-5.5-OH**	1334 00105509
ø 0.236	ø 6.0	**FSC-09-6.0-OH**	1334 00106009
ø 0.240	ø 6.1	**FSC-09-6.1-OH**	1334 00106109
ø 0.244	ø 6.2	**FSC-09-6.2-OH**	1334 00106209
ø 0.255	ø 6.5	**FSC-09-6.5-OH**	1334 00106509
ø 0.275	ø 7.0	**FSC-09-7.0-OH**	1334 00107009
ø 0.314	ø 8.0	**FSC-09-8.0-OH**	1334 00108009
ø 0.313	ø 8.0	**FSC-09-8.0-OH**	1334 00108009
ø 0.318	ø 8.1	**FSC-09-8.1-OH**	1334 00108109
ø 0.323	ø 8.3	**FSC-09-8.3-OH**	1334 00108309
ø 0.334	ø 8.5	**FSC-09-8.5-OH**	1334 00108509
ø 0.354	ø 9.0	**FSC-16-9.0-OH**	1334 00109016
ø 0.367	ø 9.4	**FSC-16-9.4-OH**	1334 00109416
ø 0.374	ø 9.5	**FSC-16-9.5-OH**	1334 00109516
ø 0.381	ø 9.7	**FSC-16-9.7-OH**	1334 00109716
ø 0.393	ø 10.0	**FSC-16-10.0-OH**	1334 00110016
ø 0.413	ø 10.5	**FSC-16-10.5-OH**	1334 00110516
ø 0.429	ø 10.9	**FSC-16-10.9-OH**	1334 00110916
ø 0.433	ø 11.0	**FSC-16-11.0-OH**	1334 00111016
ø 0.437	ø 11.1	**FSC-16-11.1-OH**	1334 00111116
ø 0.472	ø 12.0	**FSC-16-12.0-OH**	1334 00112016
ø 0.480	ø 12.2	**FSC-16-12.2-OH**	1334 00112216
ø 0.492	ø 12.5	**FSC-16-12.5-OH**	1334 00112516
ø 0.511	ø 13.0	**FSC-16-13.0-OH**	1334 00113016
ø 0.542	ø 13.8	**FSC-16-13.8-OH**	1334 00113816
ø 0.551	ø 14.0	**FSC-16-14.0-OH**	1334 00114016
ø 0.562	ø 14.3	**FSC-16-14.3-OH**	1334 00114316
ø 0.590	ø 15.0	**FSC-22-15.0-OH**	1334 00115022
ø 0.629	ø 16.0	**FSC-22-16.0-OH**	1334 00116022
ø 0.652	ø 16.6	**FSC-22-16.6-OH**	1334 00116622
ø 0.669	ø 17.0	**FSC-22-17.0-OH**	1334 00117022
ø 0.697	ø 17.8	**FSC-22-17.8-OH**	1334 00117822
ø 0.700	ø 17.8	**FSC-22-17.8-OH**	1334 00117822
ø 0.708	ø 18.0	**FSC-22-18.0-OH**	1334 00118022
ø 0.748	ø 19.0	**FSC-22-19.0-OH**	1334 00119022
ø 0.800	ø 20.4	**FSC-22-20.4-OH**	1334 00120422
ø 0.787	ø 20.0	**FSC-22-20.0-OH**	1334 00120022
ø 0.826	ø 21.0	**FSC-22-21.0-OH**	1334 00121022
ø 0.866	ø 22.0	**FSC-22-22.0-OH**	1334 00122022
ø 0.905	ø 23.0	**FSC-22-23.0-OH**	1334 00123022

FSC-C

For Collet through

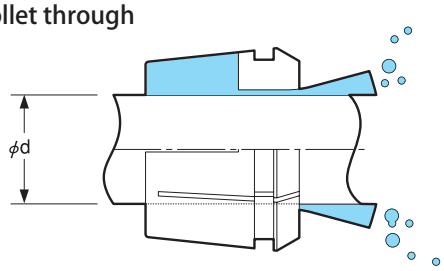

Tool Shank Dia.		Size	Code
ød (inch)	ød (mm)		
ø 0.141	ø 3.6	**FSC-09-3.6-C**	—
ø 0.168	ø 4.3	**FSC-09-4.3-C**	1335 00104309
ø 0.194	ø 5.0	**FSC-09-5.0-C**	1335 00105009
ø 0.220	ø 5.6	**FSC-09-5.6-C**	1335 00105609
ø 0.216	ø 5.5	**FSC-09-5.5-C**	1335 00105509
ø 0.236	ø 6.0	**FSC-09-6.0-C**	1335 00106009
ø 0.240	ø 6.1	**FSC-09-6.1-C**	1335 00106109
ø 0.244	ø 6.2	**FSC-09-6.2-C**	1335 00106209
ø 0.255	ø 6.5	**FSC-09-6.5-C**	1335 00106509
ø 0.275	ø 7.0	**FSC-09-7.0-C**	1335 00107009
ø 0.314	ø 8.0	**FSC-09-8.0-C**	1335 00108009
ø 0.313	ø 8.0	**FSC-09-8.0-C**	1335 00108009
ø 0.318	ø 8.1	**FSC-09-8.1-C**	1335 00108109
ø 0.323	ø 8.3	**FSC-09-8.3-C**	1335 00108309
ø 0.334	ø 8.5	**FSC-09-8.5-C**	1335 00108509
ø 0.354	ø 9.0	**FSC-16-9.0-C**	1335 00109016
ø 0.367	ø 9.4	**FSC-16-9.4-C**	1335 00109416
ø 0.374	ø 9.5	**FSC-16-9.5-C**	1335 00109516
ø 0.381	ø 9.7	**FSC-16-9.7-C**	1335 00109716
ø 0.393	ø 10.0	**FSC-16-10.0-C**	1335 00110016
ø 0.413	ø 10.5	**FSC-16-10.5-C**	1335 00110516
ø 0.429	ø 10.9	**FSC-16-10.9-C**	1335 00110916
ø 0.433	ø 11.0	**FSC-16-11.0-C**	1335 00111016
ø 0.437	ø 11.1	**FSC-16-11.1-C**	1335 00111116
ø 0.472	ø 12.0	**FSC-16-12.0-C**	1335 00112016
ø 0.480	ø 12.2	**FSC-16-12.2-C**	1335 00112216
ø 0.492	ø 12.5	**FSC-16-12.5-C**	1335 00112516
ø 0.511	ø 13.0	**FSC-16-13.0-C**	1335 00113016
ø 0.542	ø 13.8	**FSC-16-13.8-C**	1335 00113816
ø 0.551	ø 14.0	**FSC-16-14.0-C**	1335 00114016
ø 0.562	ø 14.3	**FSC-16-14.3-C**	1335 00114316
ø 0.590	ø 15.0	**FSC-22-15.0-C**	1335 00115022
ø 0.629	ø 16.0	**FSC-22-16.0-C**	1335 00116022
ø 0.652	ø 16.6	**FSC-22-16.6-C**	1335 00116622
ø 0.669	ø 17.0	**FSC-22-17.0-C**	1335 00117022
ø 0.697	ø 17.8	**FSC-22-17.8-C**	1335 00117822
ø 0.700	ø 17.8	**FSC-22-17.8-C**	1335 00117822
ø 0.708	ø 18.0	**FSC-22-18.0-C**	1335 00118022
ø 0.748	ø 19.0	**FSC-22-19.0-C**	1335 00119022
ø 0.800	ø 20.4	**FSC-22-20.4-C**	1335 00120422
ø 0.787	ø 20.0	**FSC-22-20.0-C**	1335 00120022
ø 0.826	ø 21.0	**FSC-22-21.0-C**	1335 00121022
ø 0.866	ø 22.0	**FSC-22-22.0-C**	1335 00122022
ø 0.905	ø 23.0	**FSC-22-23.0-C**	1335 00123022

OH type shall be selected in case not utilizing coolant through from the machine spindle.

Ordering Example

FSC - 16 - 9.0 - OH

16 Series — Tool Shank Dia.

Ordering Example

FSC - 16 - 9.0 - C

16 Series — Tool Shank Dia.

Inch to Metric (mm) → Inch × 25.4
Metric (mm) to Inch → Metric ÷ 25.4 or Metric × 0.03937

Special / Custom Sizes on request

MEMO

FMH

Face Mill Arbor (For Cutters With Oil Hole)

● Coolant flows from the end face of centering location to cutter with oil hole.

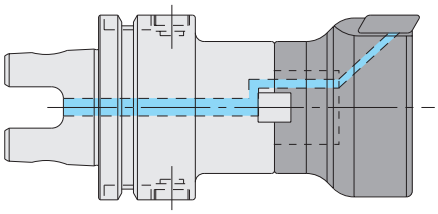

Type1

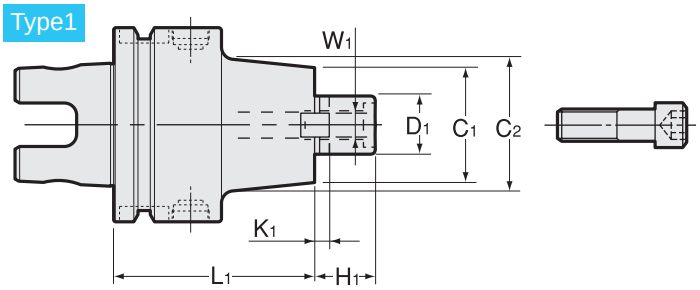

Type2

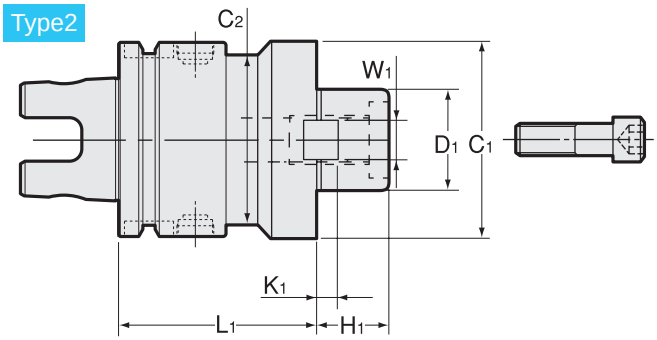

Type3

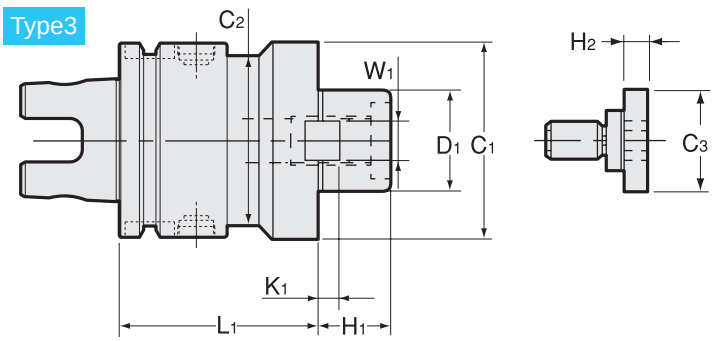

Metric Sizes

Unit : Metric

Code	Model	Type	D1 (h6)	L1	H1	C1	C2	W1	K1	C3	H2	Clamp Bolt	Cutter dia. example
1320 11116060	**UTS5040 -FMH16 -60-H**	1	16	60	17	34	34	8	5	—	—	M8	40 50
1320 11122060	**UTS5040 -FMH22 -60-H**	2	22	60	18	45	45	10	5.6	—	—	M10	50 63
1320 11125060	**UTS5040 -FMH25.4 -60-H**	2	25.4	60	22	70	45	9.5	5	—	—	M12	80 100 125
1320 1 ※ 216060	**UTS6350 -FMH16 -60**	1	16	60	17	34	34	8	5	—	—	M8	40 50
1320 1 ※ 216090	**-90**	1	16	90	17	34	40	8	5	—	—		
1320 1 ※ 216120	**-120**	1	16	120	17	34	40	8	5	—	—		
1320 1 ※ 222060	**UTS6350 -FMH22 -60**	1	22	60	18	45	45	10	5.6	—	—	M10	50 63
1320 1 ※ 222090	**-90**	1	22	90	18	45	45	10	5.6	—	—		
1320 1 ※ 222120	**-120**	1	22	120	18	45	45	10	5.6	—	—		
1320 1 ※ 225060	**UTS6350 -FMH25.4 -60**	2	25.4	60	22	70	63	9.5	5	—	—	M12	80 100 125
1320 1 ※ 225090	**-90**	2	25.4	90	22	70	63	9.5	5	—	—		
1320 1 ※ 225120	**-120**	2	25.4	120	22	70	63	9.5	5	—	—		
1320 1 ※ 231060	**UTS6350 -FMH31.75 -60**	2	31.75	60	30	80	63	12.7	7	—	—	M16	80 100
1320 1 ※ 231090	**-90**	2	31.75	90	30	80	63	12.7	7	—	—		
1320 1 ※ 231120	**-120**	2	31.75	120	30	80	63	12.7	7	—	—		
1320 1 ※ 238060	**UTS6350 -FMH38.1 -60**	3	38.1	60	34	90	63	15.9	9	50	14	MBAH-M20	125
1320 1 ※ 238090	**-90**	3	38.1	90	34	90	63	15.9	9	50	14		
1320 1 ※ 238120	**-120**	3	38.1	120	34	90	63	15.9	9	50	14		

Inch to Metric (mm) → Inch × 25.4
Metric (mm) to Inch → Metric ÷ 25.4 or Metric × 0.03937

Special / Custom Sizes on request

Metric Sizes

Unit : Metric

Code	Model	Type	D1 (h6)	L1	H1	C1	C2	W1	K1	C3	H2	Clamp Bolt	Cutter dia. example
1320 1 ※ 316075	UTS10080 -FMH16 -75	1	16	75	17	34	40	8	5	—	—	M8	40 50
1320 1 ※ 316105	-105	1	16	105	17	34	40	8	5	—	—		
1320 1 ※ 316135	-135	1	16	135	17	34	40	8	5	—	—		
1320 1 ※ 322075	UTS10080 -FMH22 -75	1	22	75	18	45	45	10	5.6	—	—	M10	50 63
1320 1 ※ 322105	-105	1	22	105	18	45	45	10	5.6	—	—		
1320 1 ※ 322135	-135	1	22	135	18	45	45	10	5.6	—	—		
1320 1 ※ 325075	UTS10080 -FMH25.4 -75	1	25.4	75	22	70	80	9.5	5	—	—	M12	80 100 125
1320 1 ※ 325105	-105	1	25.4	105	22	70	80	9.5	5	—	—		
1320 1 ※ 325135	-135	1	25.4	135	22	70	80	9.5	5	—	—		
1320 1 ※ 331075	UTS10080 -FMH31.75 -75	1	31.75	75	30	80	80	12.7	7	—	—	M16	80 100
1320 1 ※ 331105	-105	1	31.75	105	30	80	80	12.7	7	—	—		
1320 1 ※ 331135	-135	1	31.75	135	30	80	80	12.7	7	—	—		
1320 1 ※ 338075	UTS10080 -FMH38.1 -75	3	38.1	75	34	90	90	15.9	9	50	14	MBAH-M20	125
1320 1 ※ 338105	-105	3	38.1	105	34	90	90	15.9	9	50	14		
1320 1 ※ 338135	-135	3	38.1	135	34	90	90	15.9	9	50	14		
1320 1 ※ 350075	UTS10080 -FMH50.8 -75	3	50.8	75	36	99	99	19.05	10	65	14	MBAH-M24	160
1320 1 ※ 350105	-105	3	50.8	105	36	99	99	19.05	10	65	14		
1320 1 ※ 350135	-135	3	50.8	135	36	99	99	19.05	10	65	14		

When placing an order, please specify high or low pressure. For high pressure type, please add (–H) on end of the description.

1. UTS5040 is available in high pressure only.
2. Clamp bolt is included.

Ordering Example

Low pressure type

0 ~ 1.0MPa (UTS10080 : 0 ~ 2.0MPa)

UTS6350 - FMH 25.4 - 60

Shank size / D1 / L1

Ordering Example

High pressure type

1.1 ~ 7.0MPa (UTS10080 : 2.1 ~ 7.0MPa)

UTS6350 - FMH 25.4 - 60 - H

Shank size / D1 / L1 / High pressure type

Inch to Metric (mm) → Inch × 25.4
Metric (mm) to Inch → Metric ÷ 25.4 or Metric × 0.03937

Special / Custom Sizes on request

FMA

Face Mill Arbor

● For JIS B4113 face mill.

Type1

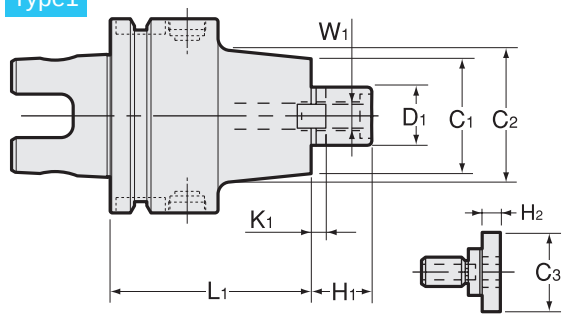

Type2

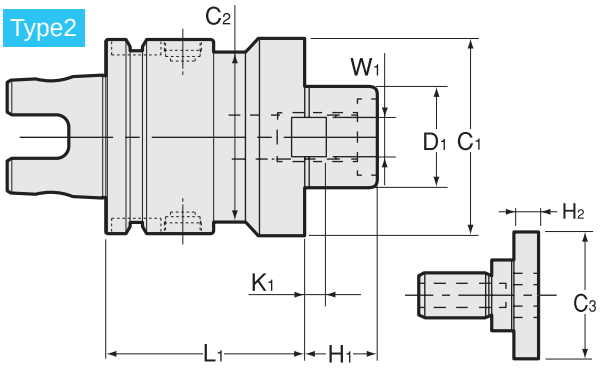

Metric Sizes

Unit : Metric

Code	Model	Type	D1	L1	H1	C1	C2	W1	K1	C3	H2	Clamp Bolt	Cutter dia. Example
1320 01125060	**UTS5040 -FMA25.4 -60-H**	1	25.4	60	22	50	50	9.5	5	33	10	MBA-M12	75
1320 0 ※ 225060	**UTS6350 -FMA25.4 -60**	1	25.4	60	22	50	50	9.5	5	33	10		
1320 0 ※ 225090	**-90**	1	25.4	90	22	50	50	9.5	5	33	10	MBA-M12	75
1320 0 ※ 225120	**-120**	1	25.4	120	22	50	50	9.5	5	33	10		
1320 0 ※ 231060	**UTS6350 -FMA31.75 -60**	1	31.75	60	30	60	60	12.7	7	40	10		
1320 0 ※ 231090	**-90**	1	31.75	90	30	60	60	12.7	7	40	10	MBA-M16	100
1320 0 ※ 231120	**-120**	1	31.75	120	30	60	60	12.7	7	40	10		
1320 0 ※ 238060	**UTS6350 -FMA38.1 -60**	2	38.1	60	34	80	63	15.9	9	50	14		
1320 0 ※ 238090	**-90**	2	38.1	90	34	80	63	15.9	9	50	14	MBA-M20	125
1320 0 ※ 238120	**-120**	2	38.1	120	34	80	63	15.9	9	50	14		
1320 0 ※ 325075	**UTS10080 -FMA25.4 -75**	1	25.4	75	22	50	85	9.5	5	33	10		
1320 0 ※ 325105	**-105**	1	25.4	105	22	50	85	9.5	5	33	10	MBA-M12	75
1320 0 ※ 325135	**-135**	1	25.4	135	22	50	85	9.5	5	33	10		
1320 0 ※ 331075	**UTS10080 -FMA31.75 -75**	1	31.75	75	30	60	85	12.7	7	40	10		
1320 0 ※ 331105	**-105**	1	31.75	105	30	60	85	12.7	7	40	10	MBA-M16	100
1320 0 ※ 331135	**-135**	1	31.75	135	30	60	85	12.7	7	40	10		
1320 0 ※ 338075	**UTS10080 -FMA38.1 -75**	1	38.1	75	34	80	85	15.9	9	50	14		
1320 0 ※ 338105	**-105**	1	38.1	105	34	80	85	15.9	9	50	14	MBA-M20	125
1320 0 ※ 338135	**-135**	1	38.1	135	34	80	85	15.9	9	50	14		
1320 0 ※ 350075	**UTS10080 -FMA50.8 -75**	1	50.8	75	36	99	99	19.05	10	65	14		
1320 0 ※ 350105	**-105**	1	50.8	105	36	99	99	19.05	10	65	14	MBA-M24	150
1320 0 ※ 350135	**-135**	1	50.8	135	36	99	99	19.05	10	65	14		

When placing an order, please specify high or low pressure. For high pressure type, please add (–H) on end of the description.

1. UTS5040 is available in high pressure only.
2. Clamp bolt is included.

Ordering Example

Low pressure type

0 ~ 1.0MPa (UTS10080 : 0 ~ 2.0MPa)

UTS6350 - **FMA** **25.4** - **60**

Shank size | D1 | L1

Ordering Example

High pressure type

1.1 ~ 7.0MPa (UTS10080 : 2.1 ~ 7.0MPa)

UTS6350 - **FMA** **25.4** - **60** - **H**

Shank size | D1 | L1 | High pressure type

Inch to Metric (mm) → Inch × 25.4
Metric (mm) to Inch → Metric ÷ 25.4 or Metric × 0.03937

Special / Custom Sizes on request

SPECIALIZED MACHINE SERIES TOOLING SYSTEM

Quick Change Stub Holder

Application

- Stub drilling and reaming.
  Endmilling possible with KH-E.
- For special purpose machines, transfer lines etc.

Feature

Bushingless machining
Use of short stub drills increases rigidity.

Simple machine design
Bushingless machining reduce cost for machine design and manufacturing.

Reduction of tool cost
Stub drills offer high rigidity and long tool life.

Easy disposal of chips
The simple stub holder design allows for easy chip removal.

Secure gripping of drill
NT's high precision collets assures maximum gripping power and precise hole location.

Reduction of preparation time
Insertion / removal of the stub holders is easily achieved by a single hand operation.
The projection length of stub drill can be adjusted by the preset screw.

No Rust

Special Surface Treatment
- Rust-free under normal use conditions. No loss of precision due to rust.
- Minimum maintenance required.

Stub Holder
KH-E
KH-EC1



Stub Holder
KH-A
KH



Stub Tapper
KD-NL



Stub Holder
KD
KD-T



Problems with Old Style Drilling

- Old holders tend to get rusty quickly, and require maintenance.
- Bushings are required due to low rigidity of drill and spindle.
- The use of bushings and bush plates limits chip disposal. Longer time is needed for machine design.
- Expensive MT shank drills are required to secure high gripping accuracy.
- It takes a longer time to replace the tools.
- Longer drill projections reduces accuracy.

Inch to Metric (mm) → Inch × 25.4
Metric (mm) to Inch → Metric ÷ 25.4 or Metric × 0.03937

Special / Custom Sizes on request

KH-E

Quick Change Stub Holder

Feature

Endmilling, which was not available before, becomes possible.

High Rigidity Owing to the locking function incorporated, the holder doesn't come off spindle even though drawing force works.

High Precision As the high precision collet is employed, the runout is available within 10 microns at 4×D (4×tool shank dia. distance from the holder nose).

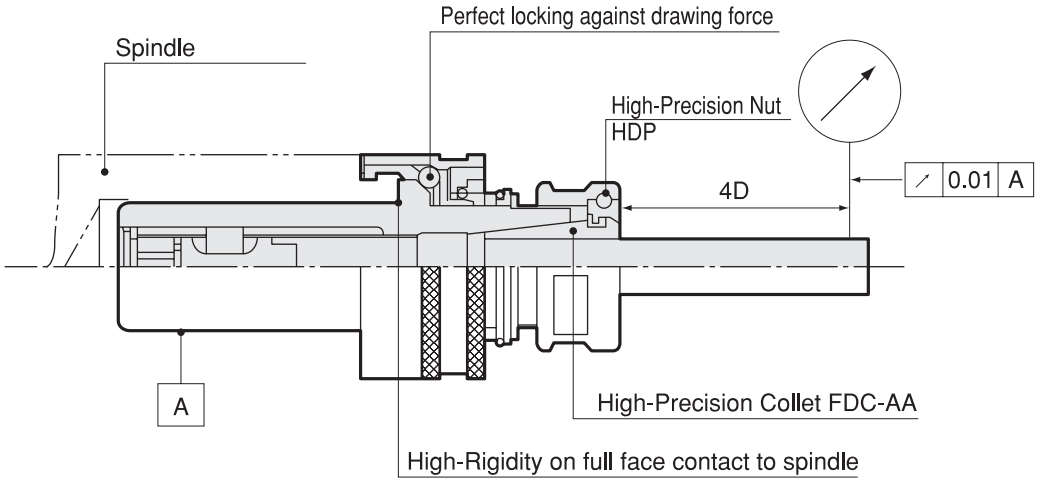

Significant Difference between KH-E and other stub holders

Strong chucking prevents pull out of cutting tool

↓

Locking mechanism stops pulling force caused by spiral cutting tools such as end mill.

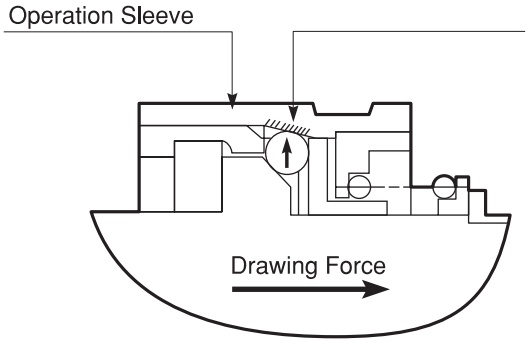

Low-pitched taper on operation sleeve does not allow the holder to come off because steel balls which move to radial direction by drawing force are stuck on the taper.

Enlarged Locking Function

Note ●For center-thru coolant feed, select KH-EC1 or KH-EC2 models on page

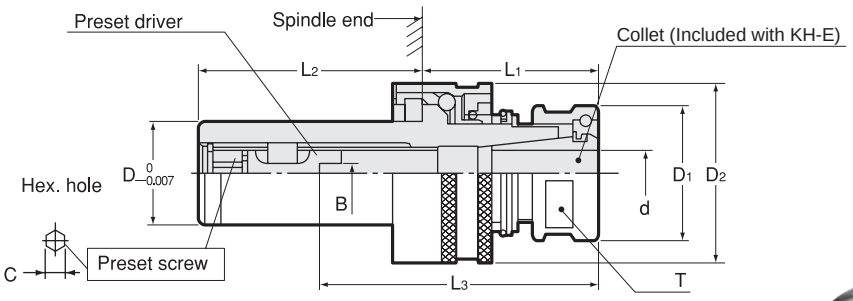



KH-E Collet set

Holder + Preset driver + Nut + Collet

Code	Model	D	B	Chucking range d	Preset driver	L3	D1	D2	L1	L2	C	kg	Collet	Nut	Spanner
3050 12 # # # ※※※	**KH-12E**	12	0	0.5 ~ 6.0	KHS -00006	20 ~ 45	23	24.3	34	35	3	0.1	FDC-d07AA	HDP-07A	S-0
			2.4	3.1 ~ 5.0	KHS -02406	24 ~ 48									
			3.0	5.1 ~ 6.0	KHS -03006	25 ~ 48									
3050 14 # # # ※※※	**KH-14E**	14	0	0.5 ~ 7.0	KHS -00007	20 ~ 45	23	26.3	34	35	4	0.1	FDC-d07AA	HDP-07A	S-0
			2.4	3.1 ~ 5.0	KHS -02407	24 ~ 48									
			3.0	5.1 ~ 6.0	KHS -03007	25 ~ 48									
			4.0	6.1 ~ 7.0	KHS -04007	27 ~ 48									
3050 16 # # # ※※※	**KH-16E**	16	0	2.6 ~ 9.0	KHS -00009	29 ~ 46	26	32	35	40	4	0.2	FDC-d09AA	HDP-09	S-1L
			2.4	3.1 ~ 5.0	KHS -02409	32 ~ 49									
			3.0	5.1 ~ 6.0	KHS -03009	34 ~ 51									
			4.0	6.1 ~ 9.0	KHS -04009	34 ~ 51									
3050 19 # # # ※※※	**KH-19E**	19	0	2.6 ~ 9.0	KHS -00009	29 ~ 51	26	35	35	45	4	0.2	FDC-d09AA	HDP-09	S-1L
			2.4	3.1 ~ 5.0	KHS -02409	32 ~ 54									
3050 20 # # # ※※※	**KH-20E**	20	3.0	5.1 ~ 6.0	KHS -03009	34 ~ 56	26	35	35	45	4	0.2	FDC-d09AA	HDP-09	S-1L
			4.0	6.1 ~ 9.0	KHS -04009	34 ~ 56									
3050 22 # # # ※※※	**KH-22E**	22	0	2.6 ~ 12.0	KHS -00012	35 ~ 62	32	38	35	55	5	0.3	FDC-d12AA	HDP-12	S-3L
			2.4	3.1 ~ 5.0	KHS -02412	33 ~ 60									
			3.0	5.1 ~ 6.0	KHS -03012	33 ~ 60									
3050 24 # # # ※※※	**KH-24E**	24	4.0	6.1 ~ 9.0	KHS -04012	37 ~ 64	32	40	35	55	5	0.3	FDC-d12AA	HDP-12	S-3L
			5.0	9.1 ~ 12.0	KHS -05012	37 ~ 64									
3050 25 # # # ※※※	**KH-25E**	25	0	3.6 ~ 16.0	KHS -00016	36 ~ 64 (69)	36	44	35	60	6	0.4	FDC-d16AA	HDP-16	S-4L
			2.4	3.6 ~ 5.0	KHS -02416	39 ~ 67 (72)									
3050 26 # # # ※※※	**KH-26E**	26	3.0	5.1 ~ 6.0	KHS -03016	39 ~ 67 (72)	36	44	35	60	6	0.4	FDC-d16AA	HDP-16	S-4L
3050 28 # # # ※※※	**KH-28E**	28	4.0	6.1 ~ 9.0	KHS -04016	40 ~ 68 (73)	36	47	35	65	6	0.5	FDC-d16AA	HDP-16	S-4L
			5.0	9.1 ~ 12.0	KHS -05016	41 ~ 69 (74)									
3050 30 # # # ※※※	**KH-30E**	30	6.0	12.1 ~ 16.0	KHS -06016	44 ~ 72 (77)	36	47	35	65	6	0.5	FDC-d16AA	HDP-16	S-4L
3050 32 # # # ※※※	**KH-32E**	32	0	3.6 ~ 22.0	KHS -00022	41 ~ 74	46	51	40	80	6	0.7	FDC-d22AA	HDP-22	S-5L
			2.4	3.6 ~ 5.0	KHS -02422	39 ~ 75									
			3.0	5.1 ~ 6.0	KHS -03022	39 ~ 75									
3050 35 # # # ※※※	**KH-35E**	35	4.0	6.1 ~ 9.0	KHS -04022	42 ~ 78	46	55	40	80	6	0.8	FDC-d22AA	HDP-22	S-5L
			5.0	9.1 ~ 12.0	KHS -05022	48 ~ 84									
3050 36 # # # ※※※	**KH-36E**	36	6.0	12.1 ~ 16.0	KHS -06022	54 ~ 90	46	55	40	80	6	0.8	FDC-d22AA	HDP-22	S-5L
			8.0	16.1 ~ 22.0	KHS -08022	54 ~ 90									
3050 48 # # # ※※※	**KH-48E**	48	0	20.1 ~ 32.0	KHS -00032	66 ~ 87	65	75	50	100	6	2.0	FDC-d32A	HDP-32	S-6
			8.0	20.1 ~ 32.0	KHS -08032	70 ~ 93									
			12.0	22.1 ~ 32.0	KHS -12032	78 ~ 109									

Inch to Metric (mm) → Inch × 25.4
Metric (mm) to Inch → Metric ÷ 25.4 or Metric × 0.03937

Special / Custom Sizes on request

KHB-E Holder body

Holder + Preset driver + Nut (without collet)

Code	Model	B	L3	D $^{0}_{-0.07}$	D1	D2	L1	L2	T	kg
3054 12□□□000	KHB -12E /00006	0	20～45	12	23	24.3	34	35	–	0.1
	/02406	2.4	24～48							
	/03006	3	25～48							
3054 14□□□000	KHB -14E /00007	0	20～45	14	23	26.3	34	35	–	0.1
	/02407	2.4	24～48							
	/03007	3	25～48							
	/04007	4	27～48							
3054 16□□□000	KHB -16E /00009	0	29～46	16	26	32	35	40	24	0.2
	/02409	2.4	32～49							
	/03009	3	34～51							
	/04009	4	34～51							
3054 19□□□000	KHB -19E /00009	0	29～51	19	26	35	35	45	24	0.2
	/02409	2.4	32～54							
3054 20□□□000	KHB -20E /03009	3	34～56	20	26	35	35	45	24	0.2
	/04009	4	34～56							
3054 22□□□000	KHB -22E /00012	0	35～62	22	32	38	35	55	30	0.3
	/02412	2.4	33～60							
	/03012	3	33～60							
3054 24□□□000	KHB -24E /04012	4	37～64	24	32	40	35	55	30	0.3
	/05012	5	37～64							
3054 25□□□000	KHB -25E /00016	0	36～64 (69)	25	36	44	35	60	33	0.4
	/02416	2.4	39～67 (72)							
3054 26□□□000	KHB -26E /03016	3	39～67 (72)	26	36	44	35	60	33	0.4
3054 28□□□000	KHB -28E /04016	4	40～68 (73)	28	36	47	35	65	33	0.5
	/05016	5	41～69 (74)							
3054 30□□□000	KHB -30E /06016	6	44～72 (77)	30	36	47	35	65	33	0.5
3054 32□□□000	KHB -32E /00022	0	41～74	32	46	51	40	80	42	0.6
	/02422	2.4	39～75							
	/03022	3	39～75							
3054 35□□□000	KHB -35E /04022	4	42～78	35	46	55	40	80	42	0.7
	/05022	5	48～84							
3054 36□□□000	KHB -36E /06022	6	54～90	36	46	55	40	80	42	0.8
	/08022	8	54～90							
3054 48□□□000	KHB -48E /00032	0	66～87	48	65	75	50	100	–	1.8
	/08032	8	70～93							
	/12032	12	78～109							

1.L3 dimension in bracket stands for max. dimension of KH-28E & KH-30E.
2.Please select preset driver according to tang size of cutting tool. (Refer to P.433)
3.Spanner is sold separately.
4.Refer to P.439 for spindle dimension.

Collet P. 086 , 444

Spanner P. 446

Preset driver P. 433







KH-E (Collet set)

Ordering Example

KH-20E / 04009 / 7.0

Preset driver / Collet I.D.

KHB-E (Holder body)

Ordering Example

KHB-20E / 04009

Preset driver

Inch to Metric (mm) → Inch × 25.4
Metric (mm) to Inch → Metric ÷ 25.4 or Metric × 0.03937

Special / Custom Sizes on request

KH-EC1

Quick Change Stub Holder (For High Coolant Pressure)

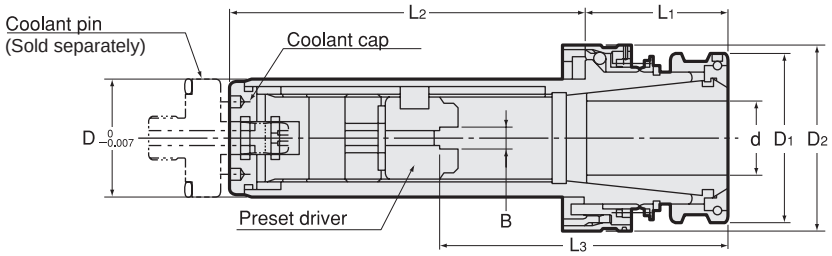

KHB-EC1 Holder body

Holder + Preset driver + Nut

Code	Model	B	Collet I.D. d	L3	D	D1	D2	L1	L2	kg	Max. Coolant	Coolant pin	Collet
3055 14 ※※※ 000	KHB -14EC1 /00007	0	3.0 ~ 7.0	20 ~ 45	14	23	26.3	34	50	0.1	8MPa	KH-14EC-P	FDC-07-OH or C
	/02407	2.4	3.1 ~ 5.0	24 ~ 48									
	/03007	3.0	5.1 ~ 6.0	25 ~ 48									
	/04007	4.0	6.1 ~ 7.0	27 ~ 48									
3055 16 ※※※ 000	KHB -16EC1 /00009	0	3.0 ~ 9.0	29 ~ 47	16	26	32	35	55	0.2	8MPa	KH-16EC-P	FDC-09-OH or C
	/02409	2.4	3.1 ~ 5.0	32 ~ 50									
	/03009	3.0	5.1 ~ 6.0	34 ~ 52									
	/04009	4.0	6.1 ~ 9.0	34 ~ 52									
3055 19 ※※※ 000	KHB -19EC1 /00009	0	3.0 ~ 9.0	29 ~ 52	19	26	35	35	60	0.2	8MPa	KH-19EC-P	FDC-09-OH or C
	/02409	2.4	3.1 ~ 5.0	32 ~ 55									
3055 20 ※※※ 000	KHB -20EC1 /03009	3.0	5.1 ~ 6.0	34 ~ 57	20	26	35	35	60	0.2	8MPa	KH-20EC-P	FDC-09-OH or C
	/04009	4.0	6.1 ~ 9.0	34 ~ 57									
3055 22 ※※※ 000	KHB -22EC1 /00012	0	3.0 ~ 12	35 ~ 62	22	32	38	35	70	0.3	8MPa	KH-22EC-P	FDC-12-OH or C
	/02412	2.4	3.1 ~ 5.0	34 ~ 61									
	/03012	3.0	5.1 ~ 6.0	35 ~ 61									
3055 24 ※※※ 000	KHB -24EC1 /04012	4.0	6.1 ~ 9.0	37 ~ 64	24	32	40	35	70	0.4	8MPa	KH-24EC-P	FDC-12-OH or C
	/05012	5.0	9.1 ~ 12	37 ~ 64									
3055 25 ※※※ 000	KHB -25EC1 /00016	0	6.0 ~ 16	36 ~ 64 (69)	25	36	44	35	80	0.4	8MPa	KH-25EC-P	FDC-16-OH or C
3055 26 ※※※ 000	KHB -26EC1 /03016	3.0	6.0	40 ~ 67 (72)	26	36	44	35	80	0.4	8MPa	KH-26EC-P	FDC-16-OH or C
3055 28 ※※※ 000	KHB -28EC1 /04016	4.0	6.1 ~ 9.0	42 ~ 68 (73)	28	36	47	35	85	0.5	8MPa	KH-28EC-P	FDC-16-OH or C
3055 30 ※※※ 000	KHB -30EC1 /05016	5.0	9.1 ~ 12	42 ~ 69 (74)	30	36	47	35	85	0.6	8MPa	KH-30EC-P	FDC-16-OH or C
3055 32 ※※※ 000	KHB -32EC1 /06016	6.0	12.1 ~ 16	44 ~ 72 (77)	32	46	51	40	100	0.7	8MPa	KH-32EC-P	FDC-22-OH or C
	/00022	0	6.0 ~ 22	43 ~ 79									
	/03022	3.0	6.0	47 ~ 82									
3055 35 ※※※ 000	KHB -35EC1 /04022	4.0	6.1 ~ 9.0	49 ~ 83	35	46	55	40	100	0.8	8MPa	KH-35EC-P	FDC-22-OH or C
	/05022	5.0	9.1 ~ 12	49 ~ 84									
3055 36 ※※※ 000	KHB -36EC1 /06022	6.0	12.1 ~ 16	54 ~ 90	36	46	55	40	100	0.9	6MPa	KH-36EC-P	FDC-22-OH or C
	/08022	8.0	16.1 ~ 22	54 ~ 90									

Collet P. 087-088
Spanner P. 446
Coolant Pin P. 426





1. L3 in bracket stands for KHB-28EC1 KHB-30EC1.
2. Coolant pin, collet and spanner are sold separately.
3. After removing coolant cap by adjustable pin wrench(sold separately), L3 dimension can be adjusted.
4. Please select preset driver according to tang size of cutting tool. (Refer to P.433)
5. Refer to P.439 for spindle dimension.

adjustable pin wrench (sold separately)

Code	Model	Holder Size
0150 09300000	GWA1	KHB14 ~ KHB30
0150 09300040	GWA40	KHB32 ~ KHB36

Ordering Example

KHB-20EC 1 / 03009

High coolant pressure type — Preset driver

Inch to Metric (mm) → Inch × 25.4
Metric (mm) to Inch → Metric ÷ 25.4 or Metric × 0.03937

Special / Custom Sizes on request

KH-EC2

Quick Change Stub Holder (For Low Coolant Pressure)

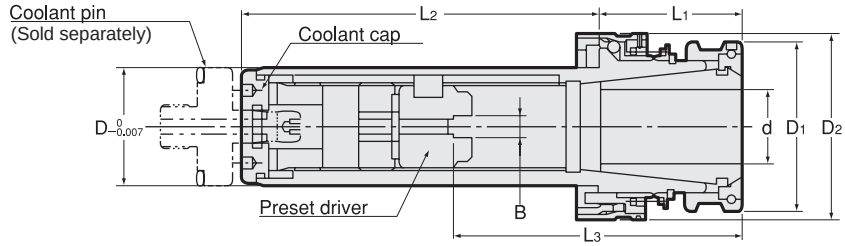

KHB-EC2 Holder body

Holder + Preset driver + Nut

Code	Model		B	Collet I.D. d	L3	D	D1	D2	L1	L2	kg	Max. Coolant	Coolant pin	Collet
305614 ※※※ 000	KHB -14EC2	/00007	0	3.0 ~ 7.0	20 ~ 45	14	23	26.3	34	50	0.1	5MPa	KH-14EC-P	FDC-07-OH or C
		/02407	2.4	3.1 ~ 5.0	24 ~ 48									
		/03007	3.0	5.1 ~ 6.0	25 ~ 48									
		/04007	4.0	6.1 ~ 7.0	27 ~ 48									
305616 ※※※ 000	KHB -16EC2	/00009	0	3.0 ~ 9.0	29 ~ 47	16	26	32	35	55	0.2	5MPa	KH-16EC-P	FDC-09-OH or C
		/02409	2.4	3.1 ~ 5.0	32 ~ 50									
		/03009	3.0	5.1 ~ 6.0	34 ~ 52									
		/04009	4.0	6.1 ~ 9.0	34 ~ 52									
305619 ※※※ 000	KHB -19EC2	/00009	0	3.0 ~ 9.0	29 ~ 52	19	26	35	35	60	0.2	5MPa	KH-19EC-P	FDC-09-OH or C
		/02409	2.4	3.1 ~ 5.0	32 ~ 55									
305620 ※※※ 000	KHB -20EC2	/03009	3.0	5.1 ~ 6.0	34 ~ 57	20	26	35	35	60	0.2	5MPa	KH-20EC-P	FDC-09-OH or C
		/04009	4.0	6.1 ~ 9.0	34 ~ 57									
305622 ※※※ 000	KHB -22EC2	/00012	0	3.0 ~ 12	35 ~ 62	22	32	38	35	70	0.3	4MPa	KH-22EC-P	FDC-12-OH or C
		/02412	2.4	3.1 ~ 5.0	34 ~ 61									
		/03012	3.0	5.1 ~ 6.0	35 ~ 61									
305624 ※※※ 000	KHB -24EC2	/04012	4.0	6.1 ~ 9.0	37 ~ 64	24	32	40	35	70	0.4	4MPa	KH-24EC-P	FDC-12-OH or C
		/05012	5.0	9.1 ~ 12	37 ~ 64									
305625 ※※※ 000	KHB -25EC2	/00016	0	6.0 ~ 16	36 ~ 64 (69)	25	36	44	35	80	0.4	3MPa	KH-25EC-P	FDC-16-OH or C
305626 ※※※ 000	KHB -26EC2	/03016	3.0	6.0	40 ~ 67 (72)	26	36	44	35	80	0.4	3MPa	KH-26EC-P	FDC-16-OH or C
305628 ※※※ 000	KHB -28EC2	/04016	4.0	6.1 ~ 9.0	42 ~ 68 (73)	28	36	47	35	85	0.5	3MPa	KH-28EC-P	FDC-16-OH or C
305630 ※※※ 000	KHB -30EC2	/05016	5.0	9.1 ~ 12	42 ~ 69 (74)	30	36	47	35	85	0.6	3MPa	KH-30EC-P	FDC-16-OH or C
		/06016	6.0	12.1 ~ 16	44 ~ 72 (77)									
305632 ※※※ 000	KHB -32EC2	/00022	0	6.0 ~ 22	43 ~ 79	32	46	51	40	100	0.7	3MPa	KH-32EC-P	FDC-22-OH or C
		/03022	3.0	6.0	47 ~ 82									
305635 ※※※ 000	KHB -35EC2	/04022	4.0	6.1 ~ 9.0	49 ~ 83	35	46	55	40	100	0.8	3MPa	KH-35EC-P	FDC-22-OH or C
		/05022	5.0	9.1 ~ 12	49 ~ 84									
305636 ※※※ 000	KHB -36EC2	/06022	6.0	12.1 ~ 16	54 ~ 90	36	46	55	40	100	0.9	3MPa	KH-36EC-P	FDC-22-OH or C
		/08022	8.0	16.1 ~ 22	54 ~ 90									

Collet P. 087-088

Spanner P. 446

Coolant Pin P. 426







1. L3 in bracket stands for KHB-28EC2 KHB-30EC2.
2. Coolant pin, collet and spanner are sold separately.
3. Please select preset driver according to tang size of cuttingtool. (Refer to P.433)
   Refer to P.439 for spindle dimension.

adjustable pin wrench (sold separately)		
Code	Model	Holder Size
0150 09300000	GWA1	KHB14 ~ KHB30
0150 09300040	GWA40	KHB32 ~ KHB36

Ordering Example

KHB-20EC 2 / 03009

Low coolant pressure type — Preset driver

Inch to Metric (mm) → Inch × 25.4
Metric (mm) to Inch → Metric ÷ 25.4 or Metric × 0.03937

Special / Custom Sizes on request

Coolant pin

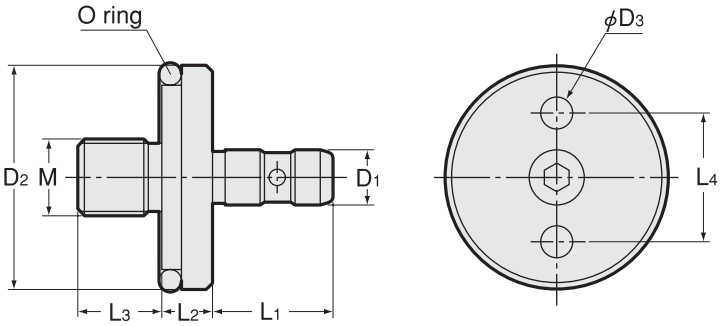

Code	Model	D1	D2	D3	L1	L2	L3	L4	kg	M	O ring
3055 00001402	**KH14EC-P**	5.7	13.9	3.5	15	8	13	9.6	0.01	M8 P=1	P-10A 1-B
3055 00001602	**KH16EC-P**	5.7	15.9	3.5	15	8	13	11	0.02	M8 P=1	P-12 1-B
3055 00001902	**KH19EC-P**	5.7	18.9	3.5	15	8	13	11	0.03	M8 P=1	P-15 1-B
3055 00002002	**KH20EC-P**	5.7	19.9	3.5	15	8	13	11	0.03	M8 P=1	P-16 1-B
3055 00002202	**KH22EC-P**	7.6	21.9	5.5	16.5	8	13	15.4	0.03	M10 P=1	P-18 1-B
3055 00002402	**KH24EC-P**	7.6	23.9	5.5	16.5	8	13	15.4	0.04	M10 P=1	P-20 1-B
3055 00002502	**KH25EC-P**	8.6	24.9	5.5	19	8	13	17	0.04	M12 P=1	P-21 1-B
3055 00002602	**KH26EC-P**	8.6	25.9	5.5	19	8	13	17	0.04	M12 P=1	P-22 1-B
3055 00002802	**KH28EC-P**	8.6	27.9	5.5	19	8	13	17	0.05	M12 P=1	P-22A 1-B
3055 00003002	**KH30EC-P**	8.6	29.9	5.5	19	8	13	17	0.05	M12 P=1	P-24 1-B
3055 00003202	**KH32EC-P**	8.6	31.9	5.5	19	8	13	20	0.06	M12 P=1	P-26 1-B
3055 00003502	**KH35EC-P**	8.6	34.9	5.5	19	8	13	20	0.06	M12 P=1	P-29 1-B
3055 00003602	**KH36EC-P**	8.6	35.9	5.5	19	8	13	20	0.06	M12 P=1	P-30 1-B

Coolant pin wrench

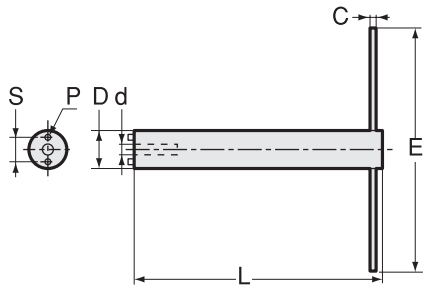

Model	Coolant pin	d	D	S	P	L	C	E	kg
HDMC -14G	KH14EC-P	6	13.5	9.6	3	120	6	120	
-16G	KH16EC-P KH19EC-P KH20EC-P	6	15.5	11	3	140	6	120	
-22G	KH22EC-P KH24EC-P	8	21.5	15.4	5	160	10	160	0.5
-25G	KH25EC-P KH26EC-P KH28EC-P KH30EC-P	9	24.5	17	5	180	10	160	0.7
-32G	KH32EC-P KH35EC-P KH36EC-P	9	31.5	20	5	200	12	200	1.4

Coolant pin wrench is necessary to replace coolant pin.

Inch to Metric (mm) → Inch × 25.4
Metric (mm) to Inch → Metric ÷ 25.4 or Metric × 0.03937

Special / Custom Sizes on request

Stub Holder KH-E Endmilling Guidelines

Shape	Material	Cutter's dia	Rotation (min-1)	Feed (mm/min)	Max. cutting length L			
					KH16E	KH22E	KH26E	KH35E
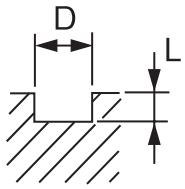	Aluminum (AC4C)	ϕ 6	4,000	387	1D	1D	—	—
		ϕ 12	3,150	400	—	1D	1D	—
		ϕ 16	2,000	345	—	—	0.75D	0.75D
		ϕ 20	1,000	315	—	—	—	0.5D
	Cast Iron (FC25)	ϕ 6	2,240	150	0.75D	1D	—	—
		ϕ 12	1,000	190	—	0.75D	0.75D	—
		ϕ 16	800	170	—	—	1D	0.75D
		ϕ 20	630	160	—	—	—	0.5D
	Steel (S45C)	ϕ 6	1,000	48	1D	1D	—	—
		ϕ 12	450	60	—	0.75D	1D	—
		ϕ 16	355	60	—	—	0.5D	0.5D
		ϕ 20	280	56	—	—	—	0.5D
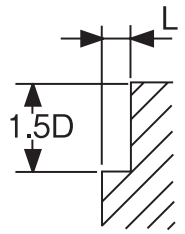	Aluminum (AC4C)	ϕ 6	9,000	1,000	0.3D	0.3D	—	—
		ϕ 12	4,000	1,180	—	0.3D	0.3D	—
		ϕ 16	3,150	1,060	—	—	0.3D	0.2D
		ϕ 20	2,500	1,000	—	—	—	0.1D
	Cast Iron (FC25)	ϕ 6	2,650	355	0.1D	0.1D	—	—
		ϕ 12	1,180	450	—	0.2D	0.2D	—
		ϕ 16	950	400	—	—	0.2D	0.1D
		ϕ 20	750	375	—	—	—	0.1D
	Steel (S45C)	ϕ 6	1,320	125	0.2D	0.2D	—	—
		ϕ 12	600	160	—	0.2D	0.2D	—
		ϕ 16	470	160	—	—	0.2D	0.1D
		ϕ 20	375	150	—	—	—	0.1D

KH-A

Quick Change Stub Holder

● Stub drilling for special purpose machines and transfer machines.

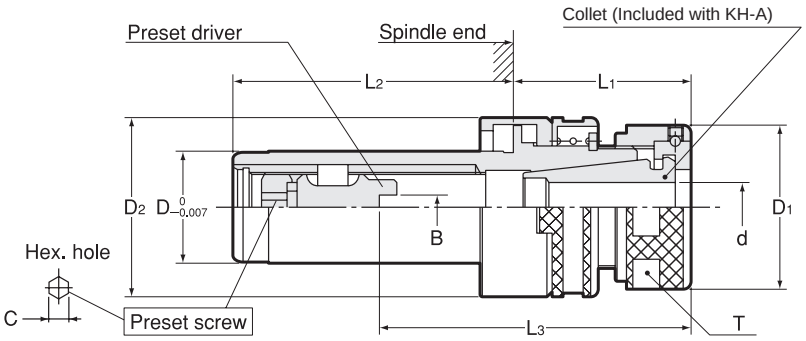



KH-A Collet set

Holder + Preset driver + Nut + Collet

Code	Model	D	B	Chucking range d	Preset driver	L3	D1	D2	L1	L2	C	kg	Collet	Nut	Spanner
2340 121 □□※※※	**KH-12AR**	12	0	0.5 ~ 6.0	KHS -00006	23 ~ 45	19	20	34	35	3	0.1	FDC-d07A	KDP-1414	Flat 17mm width
			2.4	3.1 ~ 5.0	KHS -02406	26 ~ 48									
			3.0	5.1 ~ 6.0	KHS -03006	26 ~ 48									
2340 141 □□※※※	**KH-14AR**	14	0	0.5 ~ 7.0	KHS -00007	23 ~ 45	19	24.3	34	35	4	0.1	FDC-d07A	KDP-1414	Flat 17mm width
			2.4	3.1 ~ 5.0	KHS -02407	26 ~ 48									
			3.0	5.1 ~ 6.0	KHS -03007	26 ~ 48									
			4.0	6.1 ~ 7.0	KHS -04007	27 ~ 48									
2340 160 □□※※※	**KH-16A**	16	0	2.8 ~ 9.0	KHS -00009	28 ~ 45	26	29	35	40	4	0.2	EDC-d19	KDP-1916	S-1L
			2.4	3.1 ~ 5.0	KHS -02409	31 ~ 48									
			3.0	5.1 ~ 6.0	KHS -03009	33 ~ 50									
			4.0	6.1 ~ 9.0	KHS -04009	34 ~ 50									
2340 190 □□※※※	**KH-19A**	19	0	2.8 ~ 9.0	KHS -00009	28 ~ 50	26	32	35	45	4	0.2	EDC-d19	KDP-1916	S-1L
			2.4	3.1 ~ 5.0	KHS -02409	31 ~ 53									
2340 200 □□※※※	**KH-20A**	20	3.0	5.1 ~ 6.0	KHS -03009	33 ~ 55	26	32	35	45	4	0.2	EDC-d19	KDP-1916	S-1L
			4.0	6.1 ~ 9.0	KHS -04009	34 ~ 55									
2340 220 □□※※※	**KH-22A**	22	0	2.8 ~ 12	KHS -00012	34 ~ 61	32	35	35	55	5	0.3	EDC-d24	KDP-2422	S-3L
			2.4	3.1 ~ 5.0	KHS -02412	32 ~ 59									
			3.0	5.1 ~ 6.0	KHS -03012	32 ~ 59									
2340 240 □□※※※	**KH-24A**	24	4.0	6.1 ~ 9.0	KHS -04012	36 ~ 63	32	37	35	55	5	0.3	EDC-d24	KDP-2422	S-3L
			5.0	9.1 ~ 12	KHS -05012	39 ~ 63									
2340 250 □□※※※	**KH-25A**	25	0	4.0 ~ 16	KHS -00016	41 ~ 60 (65)	36	41	35	60	6	0.4	EDC-d28	KDP-2825	S-4L
2340 260 □□※※※	**KH-26A**	26	2.4	4.0 ~ 5.0	KHS -02416	36 ~ 58 (63)	36	41	35	60	6	0.4	EDC-d28	KDP-2825	S-4L
			3.0	5.1 ~ 6.0	KHS -03016	39 ~ 61 (66)									
2340 280 □□※※※	**KH-28A**	28	4.0	6.1 ~ 9.0	KHS -04016	42 ~ 64 (69)	36	44	35	65	6	0.5	EDC-d28	KDP-2825	S-4L
2340 300 □□※※※	**KH-30A**	30	5.0	9.1 ~ 12	KHS -05016	47 ~ 69 (74)	36	44	35	65	6	0.5	EDC-d28	KDP-2825	S-4L
			6.0	12.1 ~ 16	KHS -06016	51 ~ 72 (77)									
2340 320 □□※※※	**KH-32A**	32	0	4.0 ~ 22	KHS -00022	46 ~ 75	46	48	40	80	6	0.7	EDC-d36	KDP-3632	S-5L
			2.4	4.0 ~ 5.0	KHS -02422	39 ~ 76									
2340 350 □□※※※	**KH-35A**	35	3.0	5.1 ~ 6.0	KHS -03022	39 ~ 76	46	52	40	80	6	0.8	EDC-d36	KDP-3632	S-5L
			4.0	6.1 ~ 9.0	KHS -04022	42 ~ 79									
			5.0	9.1 ~ 12	KHS -05022	48 ~ 85									
2340 360 □□※※※	**KH-36A**	36	6.0	12.1 ~ 16	KHS -06022	54 ~ 91	46	52	40	80	6	0.8	EDC-d36	KDP-3632	S-5L
			8.0	16.1 ~ 22	KHS -08022	58 ~ 91									
2340 481 □□※※※	**KH-48A**	48	0	20.1 ~ 32	KHS -00032	66 ~ 83	65	70	45	100	6	1.8	FDC-d32B	HDP-32	S-6
			8.0	20.1 ~ 22	KHS -08032	70 ~ 89									
			12.0	22.1 ~ 32	KHS -12032	78 ~ 105									

Inch to Metric (mm) → Inch × 25.4
Metric (mm) to Inch → Metric ÷ 25.4 or Metric × 0.03937

Special / Custom Sizes on request

KHB-A Holder body

Holder + Preset driver + Nut

Code	Model		B	L3	D	D1	D2	L1	L2	T	kg
2340 121 □□□ 06	KHB-12AR	/00006	0	23 ~ 45	12	19	20	34	35	17	0.1
		/02406	2.4	26 ~ 48							
		/03006	3	26 ~ 48							
2340 141 □□□ 07	KHB-14AR	/00007	0	23 ~ 45	14	19	24.3	34	35	17	0.1
		/02407	2.4	26 ~ 48							
		/03007	3	26 ~ 48							
		/04007	4	27 ~ 48							
2340 160 □□□ 09	KHB-16A	/00009	0	28 ~ 45	16	26	29	35	40	24	0.15
		/02409	2.4	31 ~ 48							
		/03009	3	33 ~ 50							
		/04009	4	34 ~ 50							
2340 190 □□□ 09	KHB-19A	/00009	0	28 ~ 50	19	26	32	35	45	24	0.2
		/02409	2.4	31 ~ 53							
2340 200 □□□ 09	KHB-20A	/03009	3	33 ~ 55	20	26	32	35	45	24	0.2
		/04009	4	34 ~ 55							
2340 220 □□□ 12	KHB-22A	/00012	0	34 ~ 61	22	32	35	35	55	30	0.25
		/02412	2.4	32 ~ 59							
		/03012	3	32 ~ 59							
2340 240 □□□ 12	KHB-24A	/04012	4	36 ~ 63	24	32	37	35	55	30	0.3
		/05012	5	39 ~ 63							
2340 250 □□□ 16	KHB-25A	/00016	0	41 ~ 60(65)	25	36	41	35	60	33	0.35
		/02416	2.4	36 ~ 58(63)							
2340 260 □□□ 16	KHB-26A	/03016	3	39 ~ 61(66)	26	36	41	35	60	33	0.35
		/04016	4	42 ~ 64(69)							
2340 280 □□□ 16	KHB-28A	/05016	5	47 ~ 69(74)	28	36	44	35	65	33	0.4
2340 300 □□□ 16	KHB-30A	/06016	6	51 ~ 72(77)	30	36	44	35	65	33	0.45
2340 320 □□□ 22	KHB-32A	/00022	0	46 ~ 75	32	46	48	40	80	42	0.6
		/02422	2.4	39 ~ 76							
		/03022	3	39 ~ 76							
2340 350 □□□ 22	KHB-35A	/04022	4	42 ~ 79	35	46	52	40	80	42	0.7
		/05022	5	48 ~ 85							
2340 360 □□□ 22	KHB-36A	/06022	6	54 ~ 91	36	46	52	40	80	42	0.8
		/08022	8	58 ~ 91							
2340 480 □□□ 32	KHB-48A	/00032	0	66 ~ 83	48	65	70	45	100	–	1.6
		/08032	8	70 ~ 89							
		/12032	12	78 ~ 105							

1.L3 dimension in bracket stands for max. dimension of KH-28E & KH-30E.
2.Please select preset driver according to tang size of cutting tool. (Refer to P.433)
3.Spanner is sold separately.
4.Refer to P.440 for spindle dimension.

Collet P. 444



Spanner P. 446



Preset driver P. 433

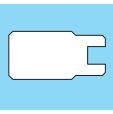

KH-A (Collet set)
Ordering Example

KH-20A / 04009 / 7.0
Preset driver / Collet I.D.

KHB-A (Holder body)
Ordering Example

KHB-20A / 04009
Preset driver

Inch to Metric (mm) → Inch × 25.4
Metric (mm) to Inch → Metric ÷ 25.4 or Metric × 0.03937

Special / Custom Sizes on request

KH-A-NL

Quick Change Stub Tapper

Applications

- Designed for use on KH-A spindle.
- Spindle Feed: All kinds of feed styles.For spindle feed other than pitch feed, use KH-A-NL in a condition where the tension feature always works a little. In this case, the length adjustment should be retained less than half.

Feature

- Small projection length. Stable tapping.
- Projection length is adjustable
- Length compensation.
- Quick change

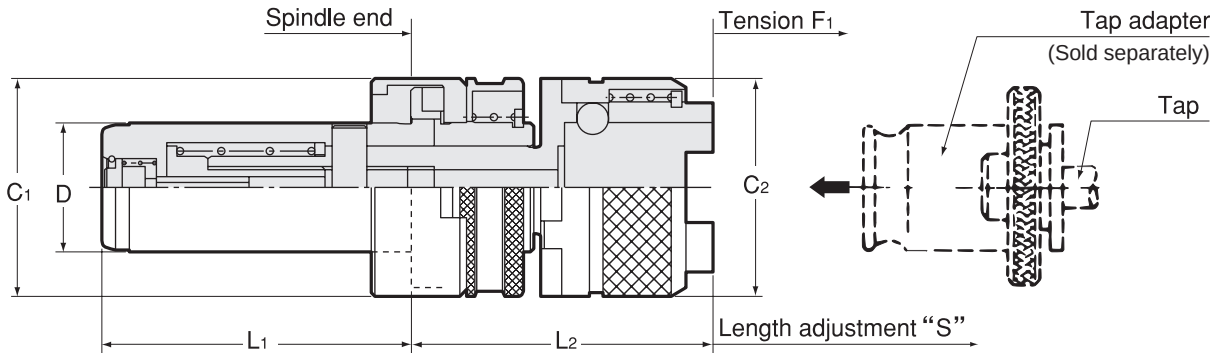

⚠ For capable tap sizes, please refer to P. 462-464 chart.

Code	Model	Tap Size	Adapter size	D	C1	C2	L1	L2	S Max	F1	kg
2940 00014006	**KH 14A-NL006**	M3 ～ M8（M10） U1/4 ～ U5/16 （U3/8）	0	14	24.3	23	35	50+S	6	6 － S	0.13
2940 00016008	**KH 16A-NL008**		0	16	29	23	40	47+S	8	8 － S	0.2
2940 00019110	**KH 19A-NL110**	M3 ～ M12（M15） U1/4 ～ U7/16 （U9/16） Pipe(PT,PS,PF)1/8 ～ 1/4	1	19	32	32	45	45+S	10	10 － S	0.25
2940 00020110	**KH 20A-NL110**		1	20	32	32	45	45+S	10	10 － S	0.25
2940 00022110	**KH 22A-NL110**		1	22	35	32	55	45+S	10	10 － S	0.33
2940 00024110	**KH 24A-NL110**		1	24	37	32	55	45+S	10	10 － S	0.37
2940 00025115	**KH 25A-NL115**		1	25	41	32	60	45+S	15	15 － S	0.45
2940 00026115	**KH 26A-NL115**		1	26	41	32	60	45+S	15	15 － S	0.45
2940 00028215	**KH 28A-NL215**	M8 ～ M22 U3/8 ～ U7/8 Pipe(PT,PS,PF)1/8 ～ 1/2	2	28	44	50	65	60+S	15	15 － S	0.75
2940 00030215	**KH 30A-NL215**		2	30	44	50	65	60+S	15	15 － S	0.8
2940 00032220	**KH 32A-NL220**		2	32	48	50	80	60+S	20	20 － S	
2940 00035220	**KH 35A-NL220**		2	35	52	50	80	60+S	20	20 － S	
2940 00036220	**KH 36A-NL220**		2	36	52	50	80	60+S	20	20 － S	
2940 00048320	**KH 48A-NL320**	M16 ～ M38	3	48	70	72	100	90+S	20	20 － S	

1.Tap sizes in brackets are for light tapping only.
2.Tap adapter is sold separately.
3.We recommend you to have 1mm leeway in your tool layout, as L2 dimension is dispersed.
4.Refer to P.440 for spindle dimension.

Tap Adapter
P. 458

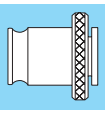

Ordering Example

KH-14A - NL 006

Length compensation (S Max)
Adapter size

Inch to Metric (mm) → Inch × 25.4
Metric (mm) to Inch → Metric ÷ 25.4 or Metric × 0.03937

Special / Custom Sizes on request

KH

Quick Change Stub Holder

Applications

- For aluminum alloy and cast iron. (For cast iron, drilling only.) In case of using φ12 and above drill size or spot-facing cast iron, please contact NT Tool.
- Special purpose machine
  For transfer machine, etc.

Feature

- **For narrow spindle pitch processing.**

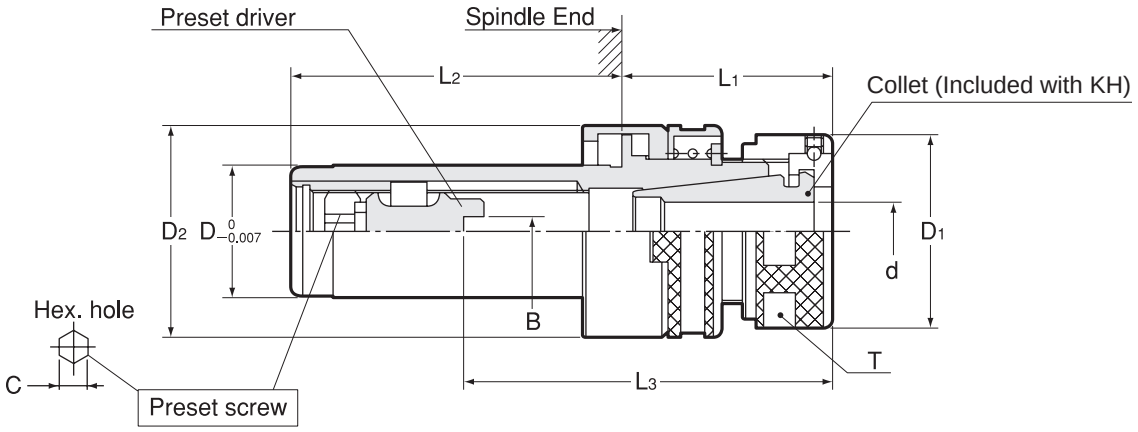

※ Incompatible with KH-E and KH-A.

KH Collet set

Holder + Preset driver + Nut + Collet

Code	Model	D	B	Chucking range d	Preset driver	L3	D1	D2	L1	L2	T	C	kg	Collet	Nut	Spanner
2300141 □□※※※	**KH-14R**	14	0	0.5 ~ 7.0	KHS -00007	23 ~ 45	19	22	34	35	17	4	0.1	FDC-d07A	KDP-1414	Flat 17mm width
			2.4	3.1 ~ 5.0	KHS -02407	26 ~ 48										
			3.0	5.1 ~ 6.0	KHS -03007	26 ~ 48										
			4.0	6.1 ~ 7.0	KHS -04007	27 ~ 48										
2300160 □□※※※	**KH-16**	16	0	2.8 ~ 9.0	KHS -00009	28 ~ 45	26	26	35	40	24	4	0.15	EDC-d19	KDP-1916	S-1L
			2.4	3.1 ~ 5.0	KHS -02409	31 ~ 48										
			3.0	5.1 ~ 6.0	KHS -03009	33 ~ 50										
			4.0	6.1 ~ 9.0	KHS -04009	34 ~ 50										
2300190 □□※※※	**KH-19**	19	0	2.8 ~ 9.0	KHS -00009	28 ~ 50	26	30	35	45	24	4		EDC-d19	KDP-1916	S-1L
			2.4	3.1 ~ 5.0	KHS -02409	31 ~ 53										
2300200 □□※※※	**KH-20**	20	3.0	5.1 ~ 6.0	KHS -03009	33 ~ 55	26	30	35	45	24	4		EDC-d19	KDP-1916	S-1L
			4.0	6.1 ~ 9.0	KHS -04009	34 ~ 55										
2300220 □□※※※	**KH-22**	22	0	2.8 ~ 12	KHS -00012	34 ~ 61	32	33	35	55	30	5	0.27	EDC-d24	KDP-2422	S-3L
			2.4	3.1 ~ 5.0	KHS -02412	32 ~ 59										
			3.0	5.1 ~ 6.0	KHS -03012	32 ~ 59										
2300240 □□※※※	**KH-24**	24	4.0	6.1 ~ 9.0	KHS -04012	36 ~ 63	32	35	35	55	30	5		EDC-d24	KDP-2422	S-3L
			5.0	9.1 ~ 12	KHS -05012	39 ~ 63										

Inch to Metric (mm) → Inch × 25.4
Metric (mm) to Inch → Metric ÷ 25.4 or Metric × 0.03937

Special / Custom Sizes on request

KHB Holder body

Holder + Preset driver + Nut

Code	Model		B	L3	D	D1	D2	L1	L2	T	C
2340 141 □□□ 07	KHB -14R	/00007	0	23 ~ 45	14	19	22	34	35	17	4
		/02407	2.4	26 ~ 48							
		/03007	3.0	26 ~ 48							
		/04007	4.0	27 ~ 48							
2340 160 □□□ 09	KHB -16	/00009	0	28 ~ 45	16	26	26	35	40	24	4
		/02409	2.4	31 ~ 48							
		/03009	3.0	33 ~ 50							
		/04009	4.0	34 ~ 50							
2340 190 □□□ 09	KHB -19	/00009	0	28 ~ 50	19	26	30	35	45	24	4
		/02409	2.4	31 ~ 53							
2340 200 □□□ 09	KHB -20	/03009	3.0	33 ~ 55	20	26	30	35	45	24	4
		/04009	4.0	34 ~ 55							
2340 220 □□□ 12	KHB -22	/00012	0	34 ~ 61	22	32	33	35	55	30	5
		/02412	2.4	32 ~ 59							
		/03012	3.0	32 ~ 59							
2340 240 □□□ 12	KHB -24	/04012	4.0	36 ~ 63	24	32	35	35	55	30	5
		/05012	5.0	39 ~ 63							

Collet
P. 444



Spanner
P. 446



Preset driver
P. 433



KH (Collet set)
Ordering Example

KH-20 / 04009 / 7.0
Preset driver / Collet I.D.

KHB (Holder body)
Ordering Example

KHB-20 / 04009
Preset driver

Inch to Metric (mm) → Inch × 25.4
Metric (mm) to Inch → Metric ÷ 25.4 or Metric × 0.03937

Special / Custom Sizes on request

Accessories

Preset driver（For KH-E、KH-A、KH）

Type1 without tang

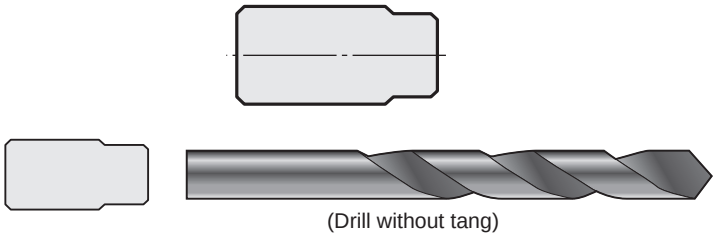

(Drill without tang)

Type2 with tang

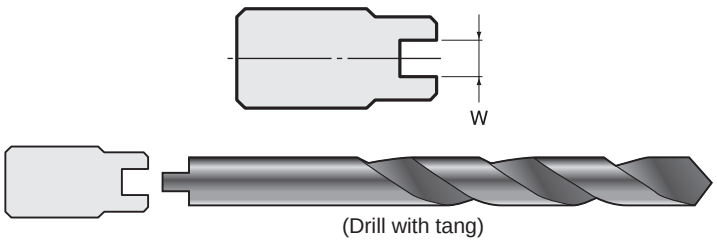

(Drill with tang)

Model		Holder model	Type	W $^{+0.4}_{+0.3}$
KHS	-00006	KH-12E KH-12AR	1	—
	-02406		2	2.4
	-03006		2	3
KHS	-00007	KH-14E KH-14AR KH-14R	1	—
	-02407		2	2.4
	-03007		2	3
	-04007		2	4
KHS	-00009	KH-16E,16A,16 KH-19E,19A,19 KH-20E,20A,20	1	—
	-02409		2	2.4
	-03009		2	3
	-04009		2	4
KHS	-00012	KH-22E,22A,22 KH-24E,24A,24	1	—
	-02412		2	2.4
	-03012		2	3
	-04012		2	4
	-05012		2	5
KHS	-00016	KH-25E,25A KH-26E,26A KH-28E,28A KH-30E,30A	1	—
	-02416		2	2.4
	-03016		2	3
	-04016		2	4
	-05016		2	5
	-06016		2	6
KHS	-00022	KH-32E,32A KH-35E,35A KH-36E,36A	1	—
	-02422		2	2.4
	-03022		2	3
	-04022		2	4
	-05022		2	5
	-06022		2	6
	-08022		2	8
KHS	-00032	KH-48E KH-48A	1	—
	-08032		2	8
	-12032		2	12

Preset driver（For KH-EC）

Type1 without tang

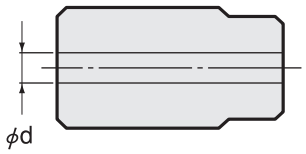

Type2 with tang

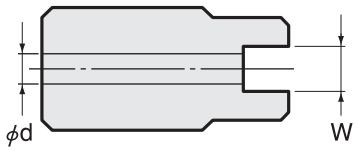

Model		Holder Model	Type	W $^{+0.4}_{+0.3}$	d
KHS	00007-OH	KHB-14EC1,2	2	2.4	2.5
	02407-OH		2	2.4	2.5
	03007-OH		2	3	2.5
	04007-OH		2	4	2.5
KHS	00009-OH	KHB-16EC1,2 KHB-19EC1,2 KHB-20EC1,2	2	2.4	2.5
	02409-OH		2	2.4	2.5
	03009-OH		2	3	3
	04009-OH		2	4	3
KHS	00012-OH	KHB-22EC1,2 KHB-24EC1,2	1	—	2.5
	02412-OH		2	2.4	2.5
	03012-OH		2	3	3
	04012-OH		2	4	4
	05012-OH		2	5	5
KHS	00016-OH	KHB-25EC1,2 KHB-26EC1,2 KHB-28EC1,2 KHB-30EC1,2	1	—	2.5
	03016-OH		2	3	3
	04016-OH		2	4	4
	05016-OH		2	5	5
	06016-OH		2	6	6
KHS	00022-OH	KHB-32EC1,2 KHB-35EC1,2 KHB-36EC1,2	1	—	2.5
	03022-OH		2	3	3
	04022-OH		2	4	4
	05022-OH		2	5	5
	06022-OH		2	6	6
	08022-OH		2	8	8

Inch to Metric (mm) → Inch × 25.4
Metric (mm) to Inch → Metric ÷ 25.4 or Metric × 0.03937

Special / Custom Sizes on request

KD

Quick Change Stub Holder

● It covers a wide range of φ0.5-32mm cutter shanks.

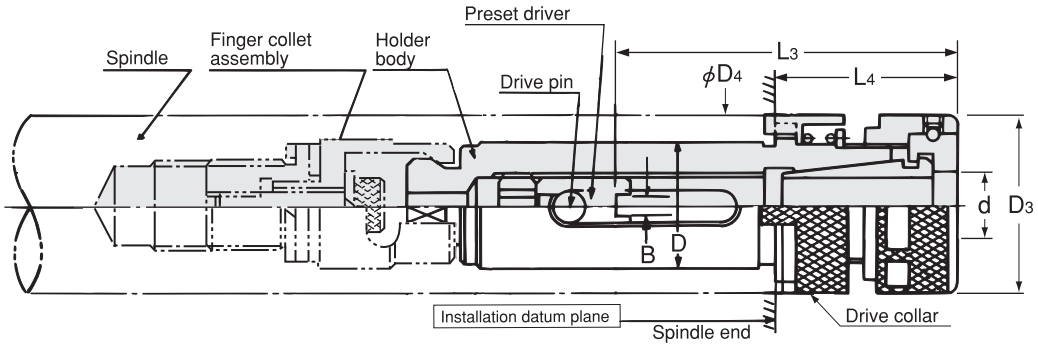



KD Collet set

Holder + Preset driver + Nut + Collet

Code	Model	D	B	Chucking range d	Presetdriver	L3	D3	D4	L4 MAX	kg	Collet	Nut	Spanner	Finger collet assembly
0800 1420 □※※※	KD-14R2	14	0	0.5 ~ 7.0	KDS -007F	31 ~ 49	19	19.5	30	0.08	FDC-d07A	KDP-1414	Flat 17mm width	KDA-14
			2.4	3.1 ~ 5.0	KDS -2.407F	31 ~ 49								
			3	5.1 ~ 6.0	KDS -307F	31 ~ 49								
			4	6.1 ~ 7.0	KDS -407F	31 ~ 49								
0800 1600 □※※※	KD-16	16	0	2.8 ~ 9.0	KDS -009F	31 ~ 50	26	26	30	0.13	EDC-d19	KDP-1916	S-1L	KDA-16
			2.4	3.1 ~ 5.0	KDS -2.409F	31 ~ 50								
			3	5.1 ~ 6.0	KDS -309F	33 ~ 52								
			4	6.1 ~ 9.0	KDS -409F	34 ~ 52								
0800 1900 □※※※	KD-19	19	0	2.8 ~ 9.0	KDS -009F	31 ~ 54	26	28	30	0.2	EDC-d19	KDP-1916	S-1L	KDA-19
			2.4	3.1 ~ 5.0	KDS -2.409F	31 ~ 54								
0800 2000 □※※※	KD-20	20	3	5.1 ~ 6.0	KDS -309F	33 ~ 56	26	28	30	0.2	EDC-d19	KDP-1916	S-1L	KDA-20
			4	6.1 ~ 9.0	KDS -409F	34 ~ 56								
0800 2200 □※※※	KD-22	22	0	2.8 ~ 12.0	KDS -012F	32 ~ 57	32	32	30	0.25	EDC-d24	KDP-2422	S-3L	KDA-22
			2.4	3.1 ~ 5.0	KDS -2.412F	32 ~ 57								
			3	5.1 ~ 6.0	KDS -312F	32 ~ 57								
0800 2400 □※※※	KD-24	24	4	6.1 ~ 9.0	KDS -412F	35 ~ 60	32	32	30	0.3	EDC-d24	KDP-2422	S-3L	KDA-24
			5	9.1 ~ 12.0	KDS -512F	39 ~ 60								
0800 2500 □※※※	KD-25	25	0	4.0 ~ 16.0	KDS -016F	41 ~ 60	36	36	30	0.35	EDC-d28	KDP-2825	S-4L	KDA-25
			2.4	4.0 ~ 5.0	KDS -2.416F	37 ~ 60								
0800 2600 □※※※	KD-26	26	3	5.1 ~ 6.0	KDS -316F	37 ~ 60	36	36	30	0.4	EDC-d28	KDP-2825	S-4L	KDA-26
0800 2800 □※※※	KD-28	28	4	6.1 ~ 9.0	KDS -416F	39 ~ 62	36	36	30	0.45	EDC-d28	KDP-2825	S-4L	KDA-28
0800 3000 □※※※	KD-30	30	5	9.1 ~ 12.0	KDS -516F	46 ~ 69	36	38	30	0.5	EDC-d28	KDP-2825	S-4L	KDA-30
			6	12.1 ~ 16.0	KDS -616F	51 ~ 74								
0800 3200 □※※※	KD-32	32	0	4.0 ~ 22.0	KDS -022F	46 ~ 84	46	46	35	0.65	EDC-d36	KDP-3632	S-5L	KDA-32
			2.4	4.0 ~ 5.0	KDS -2.422F	42 ~ 84								
			3	5.1 ~ 6.0	KDS -322F	42 ~ 84								
0800 3500 □※※※	KD-35	35	4	6.1 ~ 9.0	KDS -422F	42 ~ 84	46	46	35	0.75	EDC-d36	KDP-3632	S-5L	KDA-35
			5	9.1 ~ 12.0	KDS -522F	45 ~ 87								
0800 3600 □※※※	KD-36	36	6	12.1 ~ 16.0	KDS -622F	51 ~ 91	46	46	35	0.8	EDC-d36	KDP-3632	S-5L	KDA-36
			8	16.1 ~ 22.0	KDS -822F	58 ~ 91								
0800 4810 □※※※	KD-48	48	0	20.1 ~ 32.0	KDS -032F	60 ~ 106	65	66	40	1.7	FDC-d32B	HDP-32	S-6	KDA-48
			8	20.1 ~ 22.0	KDS -832F	70 ~ 106								
			12	22.1 ~ 32.0	KDS -1232F	78 ~ 106								

Inch to Metric (mm) → Inch × 25.4
Metric (mm) to Inch → Metric ÷ 25.4 or Metric × 0.03937

Special / Custom Sizes on request

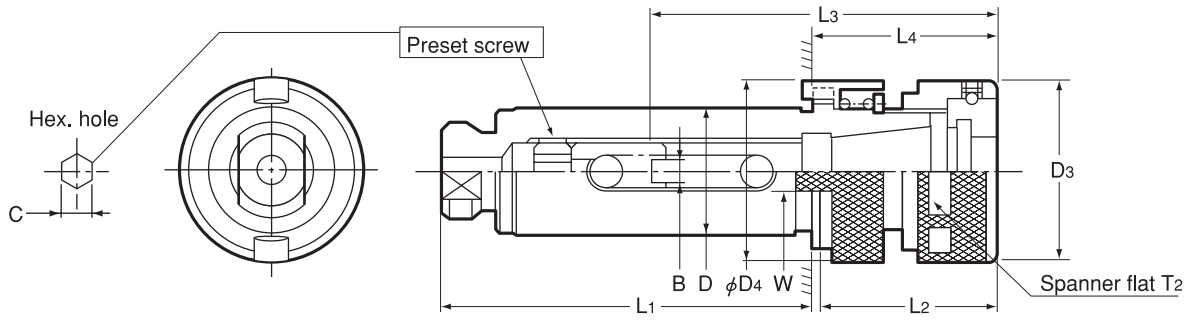

KDB Holder body

Holder + Preset driver + Nut

Code	Model	B	L3	D $^{0}_{-0.01}$	D3	D4	L1	L2	L4 MAX	W	T2	C	kg
0801 142 □□□ 07	KDB -14R2 /007F	0	31 ~ 49	14	19	19.5	48	17	30	8	17	4	0.07
	/2407F	2.4	31 ~ 49										
	/307F	3	31 ~ 49										
	/407F	4	31 ~ 49										
0801 160 □□□ 09	KDB -16 /009F	0	31 ~ 50	16	26	26	55.5	27.5	30	8	24	4	0.12
	/2409F	2.4	31 ~ 50										
	/309F	3	33 ~ 52										
	/409F	4	34 ~ 52										
0801 190 □□□ 09	KDB -19 /009F	0	31 ~ 54	19	26	28	60.5	27.5	30	9	24	4	0.18
	/2409F	2.4	31 ~ 54										
0801 200 □□□ 09	KDB -20 /309F	3	33 ~ 56	20	26	28	60.5	27.5	30	9	24	4	0.18
	/409F	4	34 ~ 56										
0801 220 □□□ 12	KDB -22 /012F	0	32 ~ 57	22	32	32	70	33	30	10	30	5	0.23
	/2412F	2.4	32 ~ 57										
	/312F	3	32 ~ 57										
0801 240 □□□ 12	KDB -24 /412F	4	35 ~ 60	24	32	32	70	33	30	10	30	5	0.27
	/512F	5	39 ~ 60										
0801 250 □□□ 16	KDB -25 /016F	0	41 ~ 60	25	36	36	83	43	30	10	33	6	0.3
0801 260 □□□ 16	KDB -26 /2416F	2.4	37 ~ 60	26	36	36	83	43	30	10	33	6	0.35
0801 280 □□□ 16	KDB -28 /316F	3	37 ~ 60	28	36	36	83	43	30	10	33	6	0.4
0801 300 □□□ 16	KDB -30 /416F	4	39 ~ 62	30	36	38	83	43	30	10	33	6	0.45
	/516F	5	46 ~ 69										
	/616F	6	51 ~ 74										
0801 320 □□□ 22	KDB -32 /022F	0	46 ~ 84	32	46	46	100	49	35	10	42	6	0.55
	/2422F	2.4	42 ~ 84										
0801 350 □□□ 22	KDB -35 /322F	3	42 ~ 84	35	46	46	100	49	35	10	42	6	0.65
	/422F	4	42 ~ 84										
	/522F	5	45 ~ 87										
0801 360 □□□ 22	KDB -36 /622F	6	51 ~ 91	36	46	46	100	49	35	10	42	6	0.7
	/822F	8	58 ~ 91										
0801 481 □□□ 32	KDB -48 /032F	0	60 ~ 106	48	65	66	117	64	40	11	—	6	1.4
	/832F	8	70 ~ 106										
	/1232F	12	78 ~ 106										

1.Please select preset driver according to tang size of cutting tool. (Refer to P.438)
2.Spanner and finger collet assembly is sold separately.
3.Refer to P.441 for spindle dimension.

Collet	Spanner	Preset driver	Finger collet assembly
P. 444	P. 446	P. 438	P. 438



KD (Collet set)
Ordering Example
KD-16 / 009F / 7.0
Preset driver / Collet I.D.

KDB (Holder body)
Ordering Example
KDB-16 / 309F
Preset driver

Inch to Metric (mm) → Inch × 25.4
Metric (mm) to Inch → Metric ÷ 25.4 or Metric × 0.03937

Special / Custom Sizes on request

KD-NL

Quick Change Stub Tapper

- Designed for use on KD spindle.
- Spindle Feed: All kinds of feed styles.For spindle feed other than pitch feed, use KD-NL in a condition where the tension feature always works a little. In this case, the length adjustment should be retained less than half.

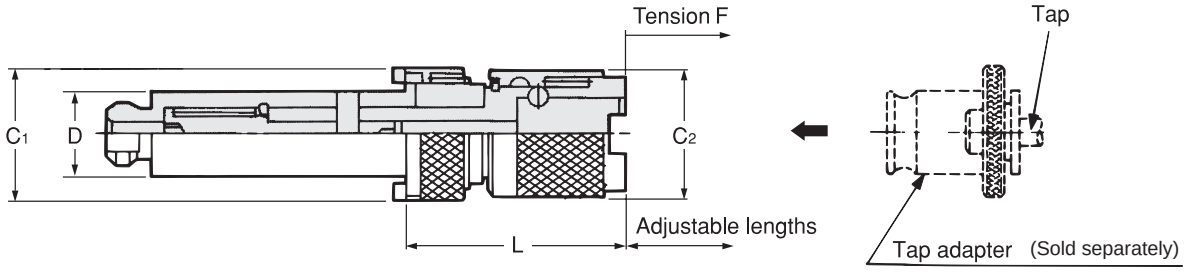

For capable tap sizes, please refer to P.462-464 chart.

Code	Model	Tap Size	Adapter size	D	C2	C1	L	S MAX	F	kg
0830 00014008	**KD 14 -NL008**	M3 ~ M8 (M10) U1/4 ~ U5/16 (U3/8)	0	14	23	19.5	45 + S	8	8-S	0.12
0830 00016010	**KD 16 -NL010**		0	16	23	26	43 + S	10	10-S	0.16
0830 00019110	**KD 19 -NL110**	M3 ~ M12 (M15) U1/4 ~ U7/16 (U9/16) Pipe(PT,PS,PF)1/8 ~ 1/4	1	19	32	28	41 + S	10	10-S	0.25
0830 00020110	**KD 20 -NL110**		1	20	32	28	41 + S	10	10-S	0.25
0830 00022110	**KD 22 -NL110**		1	22	32	32	41 + S	10	10-S	0.32
0830 00024110	**KD 24 -NL110**		1	24	32	32	41 + S	10	10-S	0.36
0830 00025115	**KD 25 -NL115**		1	25	32	36.2	41 + S	15	15-S	0.42
0830 00026115	**KD 26 -NL115**		1	26	32	36.2	41 + S	15	15-S	0.45
0830 00028215	**KD 28 -NL215**	M8 ~ M22 U3/8 ~ U7/8 Pipe(PT,PS,PF)1/8 ~ 1/2	2	28	50	36.2	56 + S	15	15-S	0.75
0830 00030215	**KD 30 -NL215**		2	30	50	38	56 + S	15	15-S	
0830 00032220	**KD 32 -NL220**		2	32	50	46	59 + S	20	20-S	
0830 00035220	**KD 35 -NL220**		2	35	50	46	59 + S	20	20-S	
0830 00036220	**KD 36 -NL220**		2	36	50	46	59 + S	20	20-S	1.15

1.Tap adapter is sold separately.
2.Finger collet assembly is sold separately.

Tap Adapter
P. 458

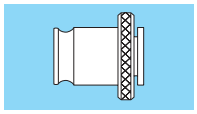

Finger collet assembly
P. 438

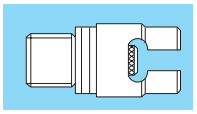

Ordering Example

KD28 - NL 006

Length compensation (S Max)
Adapter size

Inch to Metric (mm) → Inch × 25.4
Metric (mm) to Inch → Metric ÷ 25.4 or Metric × 0.03937

Special / Custom Sizes on request

KD-T

Quick Change Stub Holder

- Back-lash in radial direction is little since taper guide portion on the end face of spindle bore and taper portion of holder body securely attached.
- Except the taper guide feature, all other features and condition of use are the same as KD.

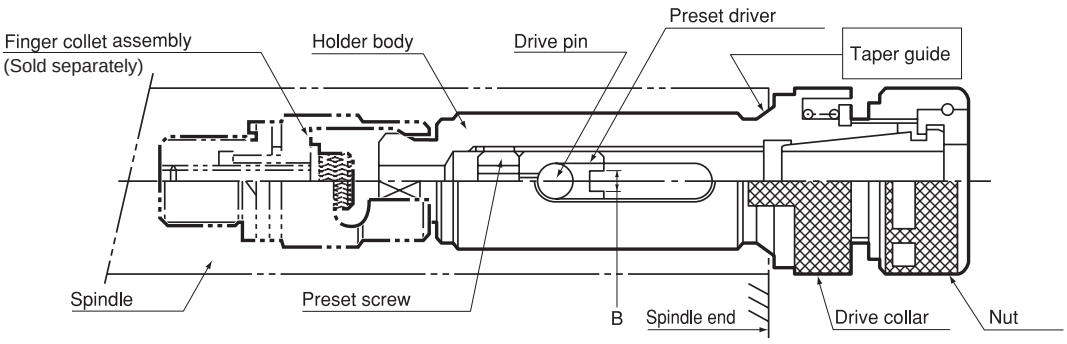

KD-T Collet set

Holder + Preset driver + Nut + Collet

Code	Model	B	Chucking range d	Preset driver	Collet	Nut	Spanner	Finger collet assembly
0850 1420 □※※※	**KD-14R2T/□□07F/** ※※	0 2.4 3 4	0.5 ~ 7.0 3.1 ~ 5.0 5.1 ~ 6.0 6.1 ~ 7.0	KDS -007F KDS -2.407F KDS -307F KDS -407F	FDC-d07A	KDP-1414	Flat 17mm width	KDA-14
0850 1600 □※※※	**KD-16T/□□09F/** ※※	0	2.8 ~ 9.0	KDS -009F	EDC-d19	KDP-1916	S-1L	KDA-16
0850 1900 □※※※	**KD-19T/□□09F/** ※※	2.4 3	3.1 ~ 5.0 5.1 ~ 6.0	KDS -2.409F KDS -309F	EDC-d19	KDP-1916	S-1L	KDA-19
0850 2000 □※※※	**KD-20T/□□09F/** ※※	4	6.1 ~ 9.0	KDS -409F	EDC-d19	KDP-1916	S-1L	KDA-20
0850 2200 □※※※	**KD-22T/□□12F/** ※※	0 2.4 3	2.8 ~ 12.0 3.1 ~ 5.0 5.1 ~ 6.0	KDS -012F KDS -2.412F KDS -312F	EDC-d24	KDP-2422	S-3L	KDA-22
0850 2400 □※※※	**KD-24T/□□12F/** ※※	4 5	6.1 ~ 9.0 9.1 ~ 12.0	KDS -412F KDS -512F	EDC-d24	KDP-2422	S-3L	KDA-24
0850 2500 □※※※	**KD-25T/□□16F/** ※※	0	4.0 ~ 16.0	KDS -016F	EDC-d28	KDP-2825	S-4L	KDA-25
0850 2600 □※※※	**KD-26T/□□16F/** ※※	2.4 3	4.0 ~ 5.0 5.1 ~ 6.0	KDS -2.416F KDS -316F	EDC-d28	KDP-2825	S-4L	KDA-26
0850 2800 □※※※	**KD-28T/□□16F/** ※※	4	6.1 ~ 9.0	KDS -416F	EDC-d28	KDP-2825	S-4L	KDA-28
0850 3000 □※※※	**KD-30T/□□16F/** ※※	5 6	9.1 ~ 12.0 12.1 ~ 16.0	KDS -516F KDS -616F	EDC-d28	KDP-2825	S-4L	KDA-30
0850 3200 □※※※	**KD-32T/□□22F/** ※※	0 2.4	4.0 ~ 22.0 4.0 ~ 5.0	KDS -022F KDS -2.422F	EDC-d36	KDP-3632	S-5L	KDA-32
0850 3500 □※※※	**KD-35T/□□22F/** ※※	3 4 5	5.1 ~ 6.0 6.1 ~ 9.0 9.1 ~ 12.0	KDS -322F KDS -422F KDS -522F	EDC-d36	KDP-3632	S-5L	KDA-35
0850 3600 □※※※	**KD-36T/□□22F/** ※※	6 8	12.1 ~ 16.0 16.1 ~ 22.0	KDS -622F KDS -822F	EDC-d36	KDP-3632	S-5L	KDA-36
0850 4810 □※※※	**KD-48RT/□□32F/** ※※	0 8 12	20.1 ~ 32.0 20.1 ~ 22.0 22.1 ~ 32.0	KDS -032F KDS -832F KDS -1232F	FDC-d32B	HDP-32	S-6	KDA-48

1.Please select preset driver according to tang size of cutting tool. (Refer to P.438)
2.Spanner and finger collet assembly is sold separately
3.Refer to P.441 for spindle dimension.

Spanner P. 446
Preset driver P. 438
Finger collet assembly P. 438


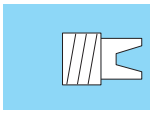
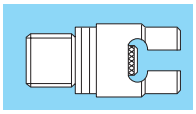

Ordering Example

KD-19T / 3 09F / 6.0

Tang width | Collet I.D.
Max. cutter dia.

Inch to Metric (mm) → Inch × 25.4
Metric (mm) to Inch → Metric ÷ 25.4 or Metric × 0.03937

Special / Custom Sizes on request

Finger collet assembly (Spindle parts)

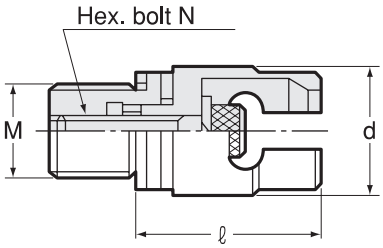

Model	Holder	d	ℓ	M (P=1)	N
KDA -14	KD-14R2	14	27.3	M10	M5
KDA -16	KD-16	16	24.3	M12	M5
KDA -19	KD-19	19	29.3	M12	M5
KDA -20	KD-20	20	29.3	M12	M5
KDA -22	KD-22	22	27	M16	M6
KDA -24	KD-24	24	27	M16	M6
KDA -25	KD-25	25	29.5	M18	M8
KDA -26	KD-26	26	29.5	M18	M8
KDA -28	KD-28	28	29.5	M18	M8
KDA -30	KD-30	30	29.5	M18	M8
KDA -32	KD-32	32	30.5	M22	M8
KDA -35	KD-35	35	30.5	M22	M8
KDA -36	KD-36	36	30.5	M22	M8
KDA -48	KD-48	48	35.5	M22	M10

Tang

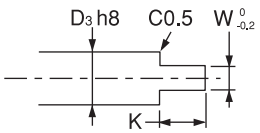

D3		W	K
Exceeding	Below		
3.1	5	2.4	5
5.1	6	3	6
6.1	9	4	8
9.1	12	5	8
12.1	16	6	10
16.1	22	8	12
22.1	32	12	12

Preset driver (For KD、KD-T)

Type1 without tang

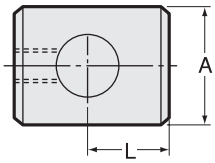

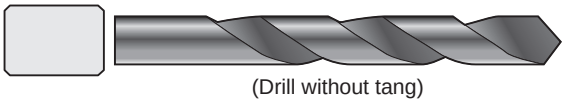

(Drill without tang)

Type2 with tang

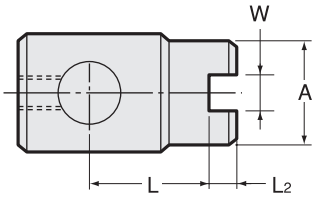

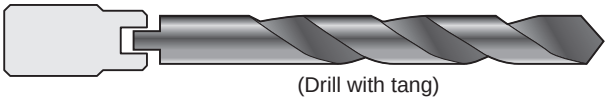

(Drill with tang)

Code	Model	Holder body	Type	W +0.4 +0.3	A	L	L2
0802 02000071	**KDS -007F**	KDB-14R2	1	—	7	5	—
0802 02024071	**-2.407F**		2	2.4	7	5	4
0802 02003071	**-307F**		2	3	7	5	4
0802 02004071	**-407F**		2	4	7	5	4
0802 02000091	**KDS -009F**	KDB-16,19,20	1	—	9	7.5	—
0802 02024091	**-2.409F**		2	2.4	7	7.5	3
0802 02003091	**-309F**		2	3	9	5.5	3
0802 02004091	**-409F**		2	4	9	5.5	3
0802 02000121	**KDS -012F**	KDB-22,24	1	—	10	12.5	—
0802 02024121	**-2.412F**		2	2.4	10.8	12.5	4
0802 02003121	**-312F**		2	3	10.8	12.5	4
0802 02004121	**-412F**		2	4	10.8	9.5	4
0802 02005121	**-512F**		2	5	10.8	9.5	4
0802 02000161	**KDS -016F**	KDB-25,26,28,30	1	—	7	21	—
0802 02024161	**-2.416F**		2	2.4	12.5	21	3
0802 02003161	**-316F**		2	3	12.5	21	3
0802 02004161	**-416F**		2	4	12.5	19	3
0802 02005161	**-516F**		2	5	12.5	12	4
0802 02006161	**-616F**		2	6	16	7	5
0802 02000221	**KDS -022F**	KDB-32,35,36	1	—	19	14	—
0802 02024221	**-2.422F**		2	2.4	19	14	3
0802 02003221	**-322F**		2	3	19	14	3
0802 02004221	**-422F**		2	4	19	14	3
0802 02005221	**-522F**		2	5	19	11	3
0802 02006221	**-622F**		2	6	19	7	3
0802 02008221	**-822F**		2	8	19	7	3
0802 02000321	**KDS -032F**	KDB-48	1	—	29	12	—
0802 02008321	**-832F**		2	8	29	12	8
0802 02012321	**-1232F**		2	12	29	12	8

Inch to Metric (mm) → Inch × 25.4
Metric (mm) to Inch → Metric ÷ 25.4 or Metric × 0.03937

Special / Custom Sizes on request

Spindle Dimensions For Quick Change Stub Holder

Dimension for KH-E spindle

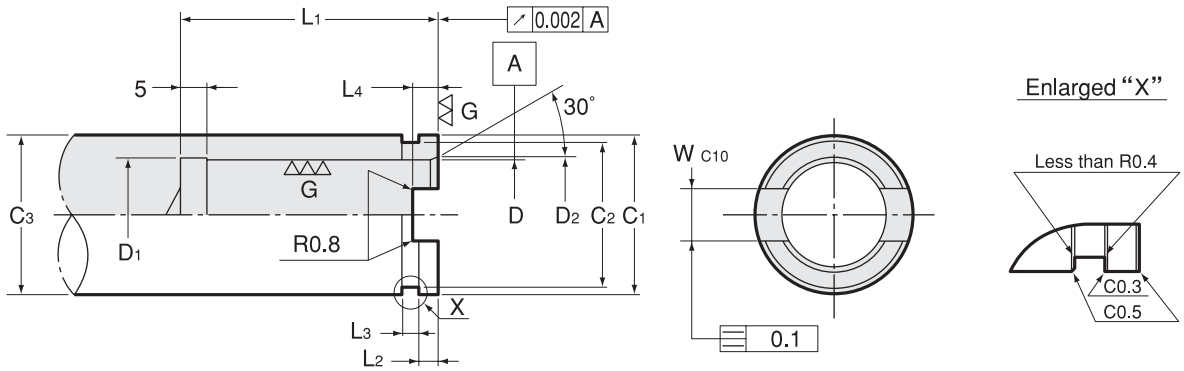

Size	D $^{+0.010}_{+0.005}$	D1	D2	C1 $^{0}_{-0.1}$	C2 $^{0}_{-0.1}$	C3	L1	L2 $^{+0.1}_{0}$	L3	L4	W C10
12E	12	12.4	13.5	18	16.5	18 or more	38	2.5	2.5	3.5	6
14E	14	14.4	15.5	22	20	20 or more	38	2.5	2.5	3.5	8
16E	16	16.4	17.5	26.4	24	25 or more	43	3.5	3.0	4.5	8
19E	19	19.4	20.5	29.4	27	28 or more	48	3.5	3.0	4.5	9
20E	20	20.4	21.5	29.4	27	28 or more	48	3.5	3.0	4.5	9
22E	22	22.4	23.5	32.4	30	32 or more	58	3.5	3.0	4.5	10
24E	24	24.4	25.5	34.4	32	32 or more	58	3.5	3.0	4.5	10
25E	25	25.4	26.5	37.4	35	35 or more	63	3.5	3.0	4.5	10
26E	26	26.4	27.5	37.4	35	35 or more	63	3.5	3.0	4.5	10
28E	28	28.4	29.5	40.4	38	40 or more	68	3.5	3.0	4.5	10
30E	30	30.4	31.5	40.4	38	40 or more	68	3.5	3.0	4.5	10
32E	32	32.4	33.5	43.8	41	45 or more	83	3.5	3.0	4.5	10
35E	35	35.4	36.5	47.8	45	45 or more	83	3.5	3.0	4.5	10
36E	36	36.4	37.5	47.8	45	45 or more	83	3.5	3.0	4.5	10
48E	48	48.4	49.5	65.4	62	65 or more	103	4.5	4.0	5.5	11

All corners not specified should be chamfered to C0.5.

- Material of spindle end : SCM415
- Heat treatment : HV613 ~ 697
- Carburized depth : 0.4 ~ 0.6

Dimension for KH-EC spindle

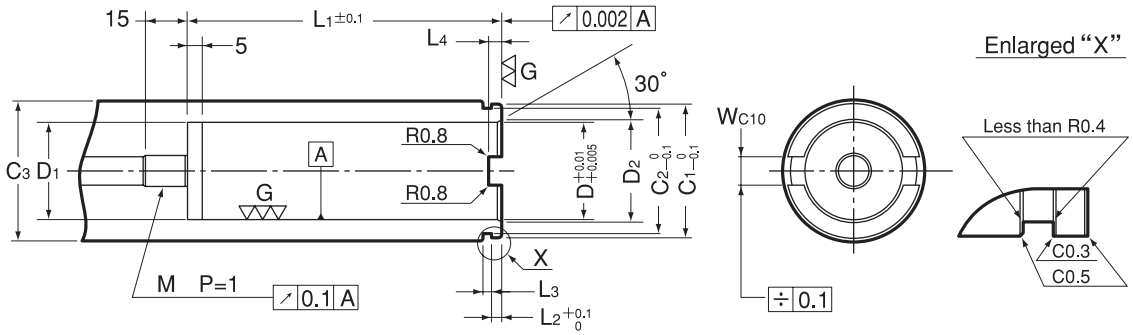

Size	D $^{+0.010}_{+0.005}$	D1	D2	C1 $^{0}_{-0.1}$	C2 $^{0}_{-0.1}$	C3	L1	L2 $^{+0.1}_{0}$	L3	W C10	L4	M
14EC	14	14.4	15.5	22	20	20 or more	60	2.5	2.5	8	3.5	M8 P=1
16EC	16	16.4	17.5	26.4	24	25 or more	65	3.5	3.0	8	4.5	M8 P=1
19EC	19	19.4	20.5	29.4	27	28 or more	70	3.5	3.0	9	4.5	M8 P=1
20EC	20	20.4	21.5	29.4	27	28 or more	70	3.5	3.0	9	4.5	M8 P=1
22EC	22	22.4	23.5	32.4	30	32 or more	80	3.5	3.0	10	4.5	M10 P=1
24EC	24	24.4	25.5	34.4	32	32 or more	80	3.5	3.0	10	4.5	M10 P=1
25EC	25	25.4	26.5	37.4	35	35 or more	91	3.5	3.0	10	4.5	M12 P=1
26EC	26	26.4	27.5	37.4	35	35 or more	91	3.5	3.0	10	4.5	M12 P=1
28EC	28	28.4	29.5	40.4	38	40 or more	96	3.5	3.0	10	4.5	M12 P=1
30EC	30	30.4	31.5	40.4	38	40 or more	96	3.5	3.0	10	4.5	M12 P=1
32EC	32	32.4	33.5	43.8	41	45 or more	111	3.5	3.0	10	4.5	M12 P=1
35EC	35	35.4	36.5	47.8	45	45 or more	111	3.5	3.0	10	4.5	M12 P=1
36EC	36	36.4	37.5	47.8	45	45 or more	111	3.5	3.0	10	4.5	M12 P=1

All corners not specified should be chamfered to C0.5.

- Material of spindle end : SCM415
- Heat treatment : HV613 ~ 697
- Carburized depth : 0.4 ~ 0.6

Inch to Metric (mm) → Inch × 25.4
Metric (mm) to Inch → Metric ÷ 25.4 or Metric × 0.03937

Special / Custom Sizes on request

Dimension for KH-A spindle

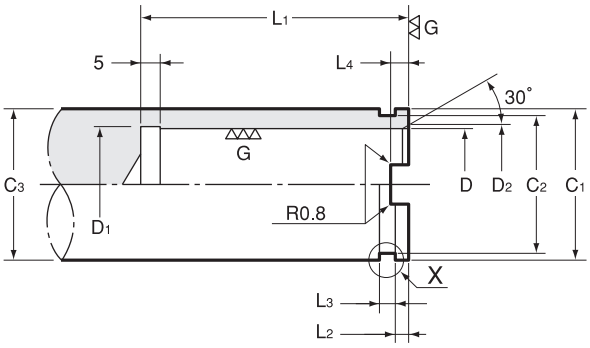

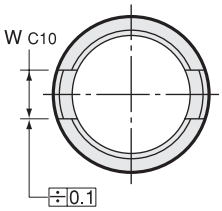

Enlarged "X"

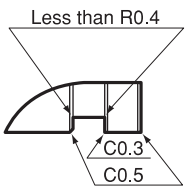

Size	D +0.015 +0.005	D1	D2	C1 0 -0.1	C2 0 -0.1	C3	L1	L2 +0.1 0	L3	W C10	L4
12AR	12	12.4	13.5	18	16.5	18 or more	38	2.5	2.5	6	3.5
14AR	14	14.4	15.5	22	20	20 or more	38	2.5	2.5	8	3.5
16A	16	16.4	17.5	26.4	24	25 or more	43	3.5	3.0	8	4.5
19A	19	19.4	20.5	29.4	27	28 or more	48	3.5	3.0	9	4.5
20A	20	20.4	21.5	29.4	27	28 or more	48	3.5	3.0	9	4.5
22A	22	22.4	23.5	32.4	30	32 or more	58	3.5	3.0	10	4.5
24A	24	24.4	25.5	34.4	32	32 or more	58	3.5	3.0	10	4.5
25A	25	25.4	26.5	37.4	35	35 or more	63	3.5	3.0	10	4.5
26A	26	26.4	27.5	37.4	35	35 or more	63	3.5	3.0	10	4.5
28A	28	28.4	29.5	40.4	38	40 or more	68	3.5	3.0	10	4.5
30A	30	30.4	31.5	40.4	38	40 or more	68	3.5	3.0	10	4.5
32A	32	32.4	33.5	43.8	41	45 or more	83	3.5	3.0	10	4.5
35A	35	35.4	36.5	47.8	45	45 or more	83	3.5	3.0	10	4.5
36A	36	36.4	37.5	47.8	45	45 or more	83	3.5	3.0	10	4.5
48A	48	48.4	49.5	65.4	62	65 or more	10	4.5	4.0	11	5.5

1. Spindle dimension for KH-A only, not for KH.
2. All corners not specified should be chamfered to C0.5.

- Material of spindle end : SCM415
- Heat treatment : HV613 ~ 697
- Carburized depth : 0.4 ~ 0.6

Dimension for KH-spindle

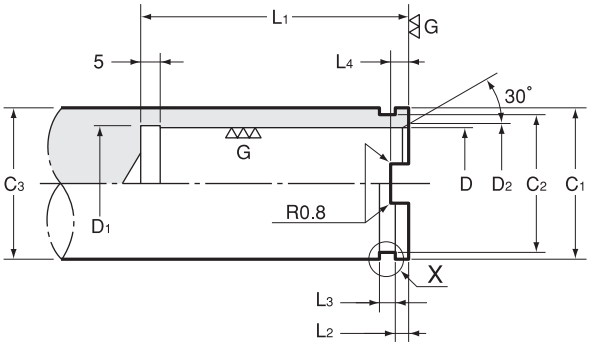

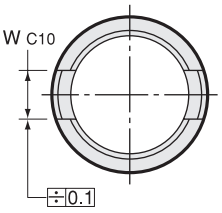

Enlarged "X"

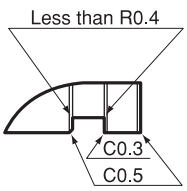

Size	D +0.015 +0.005	D1	D2	C1 0 -0.1	C2 0 -0.1	C3	L1	L2 +0.1 0	L3	W C10	L4
14	14	14.4	15.5	19.8	18	20 or more	38	2.5	2.5	8	3.5
16	16	16.4	17.5	23.8	21.4	25 or more	43	3.5	3.0	8	4.5
19	19	19.4	20.5	27.8	25.4	28 or more	48	3.5	3.0	9	4.5
20	20	20.4	21.5	27.8	25.4	28 or more	48	3.5	3.0	9	4.5
22	22	22.4	23.5	30.3	27.9	32 or more	58	3.5	3.0	10	4.5
24	24	24.4	25.5	32.3	29.9	35 or more	58	3.5	3.0	10	4.5

1. Spindle dimension for KH only, not for KH-A.
2. All corners not specified should be chamfered to C0.5.

- Material of spindle end : SCM415
- Heat treatment : HV613 - 697
- Carburized depth : 0.4 - 0.6

Inch to Metric (mm) → Inch × 25.4
Metric (mm) to Inch → Metric ÷ 25.4 or Metric × 0.03937

Special / Custom Sizes on request

Dimension for KD spindle

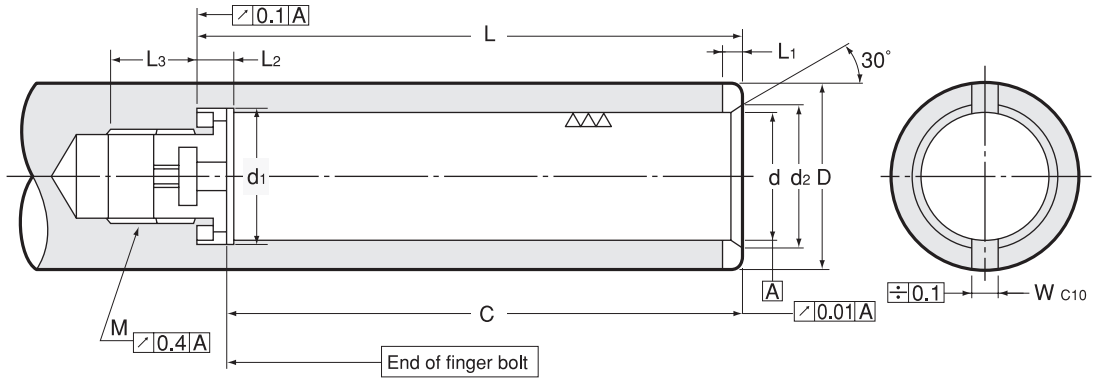

Size	d G6	d2	D Min	d1	L ± 0.1	L1 +0.2 +0.1	L2	L3	W C10	M P=1
14	14	15.5	20	14.4	68	3	5	15	8	10
16	16	17.5	25	16.4	72.5	3	5	15	8	12
19	19	20.5	28	19.4	82.5	3	5	15	9	12
20	20	21.5	28	20.4	82.5	3	5	15	9	12
22	22	23.5	32	22.4	89.5	3	5	15	10	16
24	24	25.5	32	24.4	89.5	3	5	15	10	16
25	25	26.5	35	25.4	105	3	8	20	10	18
26	26	27.5	35	26.4	105	3	8	20	10	18
28	28	29.5	38	28.4	105	3	8	20	10	18
30	30	31.5	40	30.4	105	3	8	20	10	18
32	32	33.5	42	32.4	123	3	8	20	10	22
35	35	36.5	45	35.4	123	3	8	20	10	22
36	36	37.5	45	36.4	123	3	8	20	10	22
48	48	49.5	65	48.4	145	4.5	8	20	11	22

1. C dimension shows length from end of finger bolt to end of spindle. (refer to P. 443)
2. Don't carburize thread (M) portion.

Dimension for KD-T spindle

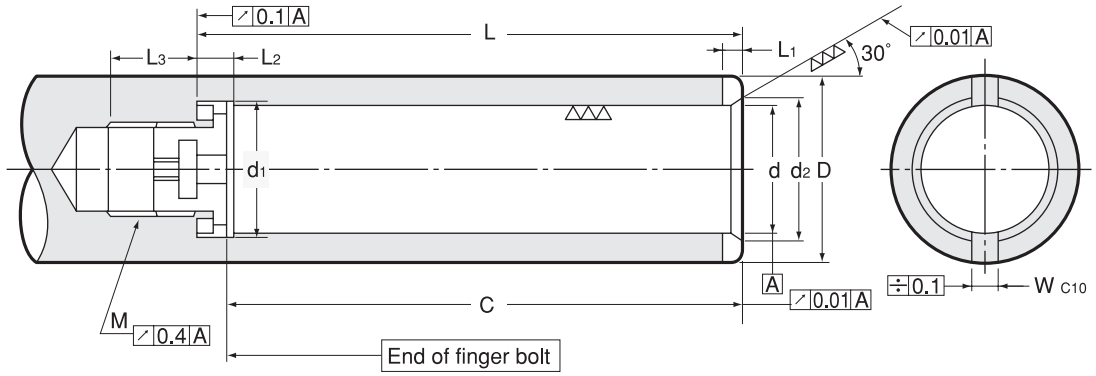

Size	d G6	d2 +0.02 −0.08	D Min	d1	L ± 0.1	L1 +0.2 +0.1	L2	L3	W C10	M P=1
14T	14	15.5	20	14.4	68	3	5	15	8	10
16T	16	17.5	25	16.4	72.5	3	5	15	8	12
19T	19	20.5	28	19.4	82.5	3	5	15	9	12
20T	20	21.5	28	20.4	82.5	3	5	15	9	12
22T	22	23.5	32	22.4	89.5	3	5	15	10	16
24T	24	25.5	32	24.4	89.5	3	5	15	10	16
25T	25	26.5	35	25.4	105	3	8	20	10	18
26T	26	27.5	35	26.4	105	3	8	20	10	18
28T	28	29.5	38	28.4	105	3	8	20	10	18
30T	30	31.5	40	30.4	105	3	8	20	10	18
32T	32	33.5	42	32.4	123	3	8	20	10	22
35T	35	36.5	45	35.4	123	3	8	20	10	22
36T	36	37.5	45	36.4	123	3	8	20	10	22
48T	48	49.5	65	48.4	145	4.5	8	20	11	22

1. KD model can be used for KD-T spindle.
2. C dimension shows length from end of finger bolt to end of spindle. (refer to P. 443)
3. In case of heat treatment on the spindle, don't carburize thread (M) portion.
4. For 30° taper gauge information, please contact NT.

Inch to Metric (mm) → Inch × 25.4
Metric (mm) to Inch → Metric ÷ 25.4 or Metric × 0.03937

Special / Custom Sizes on request

How to assemble KDA

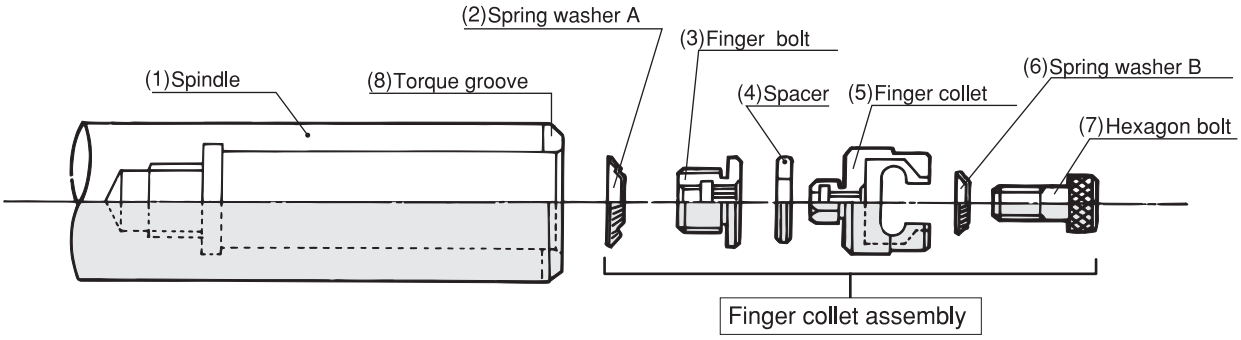

1.Make inside portion of spindle KD dimensions.
2.Assemble each of component parts in the order of A, B, C……F.

Assembling process

A

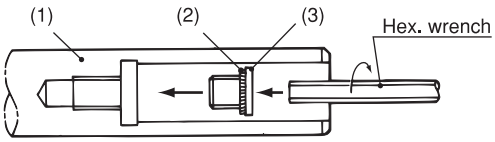

● Fit (2) into (3). Then, fit them into (1) by using a torque wrench. Clamping value shall be 30-35Nm.

B

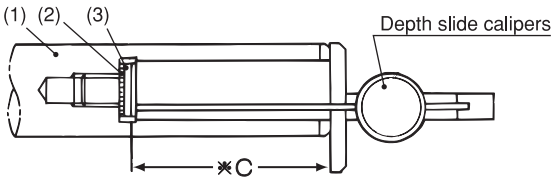

Modify spacer thickness to match measured C dimension.

C

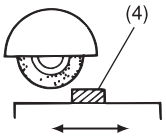

● Modification of spacer thickness

D

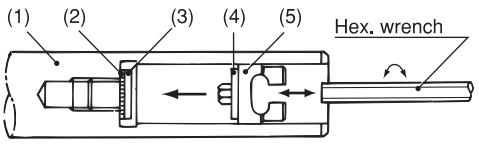

● Fit (5) into (4). Then, fit them into (3) by using hex. wrench. Keep turning the hex. wrench until it does not turn any more.

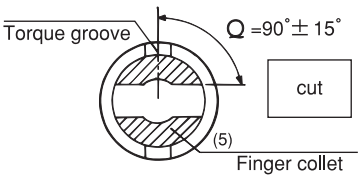

E

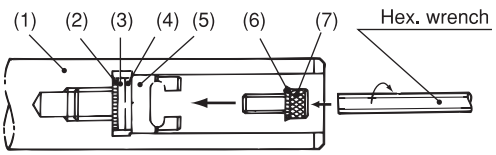

● Fit (6) into (7). Then turn them by using hex. wrench.

● When assembling (5), form a 90° angle between torque groove portion and cut portion of (5).

F
COMPLETE

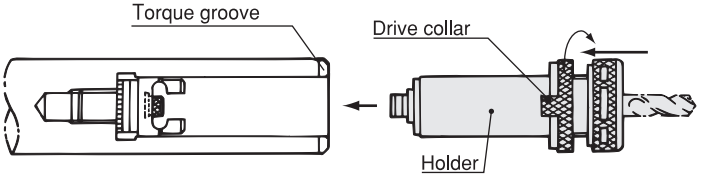

● After modifying (4), follow the procedures D, E and F.

● Install the holder into spindle and twist it right and left. (When holder is firmly fixed into spindle, drive collar is locked to the torque groove of spindle with a 'click' sound.)

Inch to Metric (mm) → Inch × 25.4
Metric (mm) to Inch → Metric ÷ 25.4 or Metric × 0.03937

Special / Custom Sizes on request

Spacer Dimension

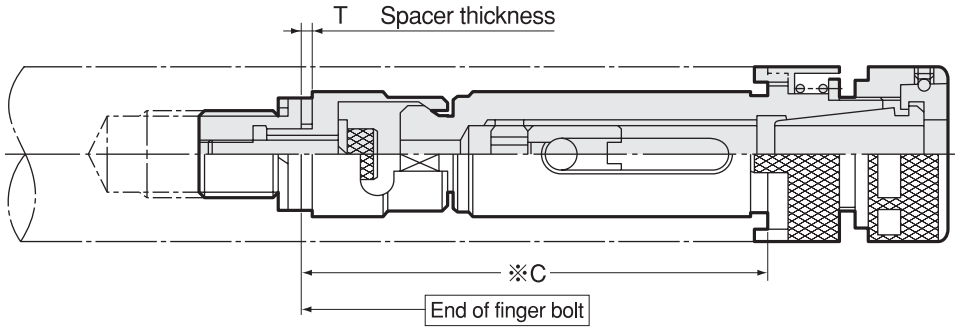

Model	※ C: Measured figure	T ± 0.01
KD-14R2	58.26 ~ 58.41	0.83
	58.42 ~ 58.57	0.98
	58.58 ~ 58.73	1.13
KD-16	68.26 ~ 68.41	2.24
	68.42 ~ 68.57	2.39
	68.58 ~ 68.73	2.54
KD-19	78.26 ~ 78.41	2.24
	78.42 ~ 78.57	2.39
KD-20	78.58 ~ 78.73	2.54
KD-22	83.96 ~ 84.11	1.94
	84.12 ~ 84.27	2.09
KD-24	84.28 ~ 84.43	2.24
KD-25	99.26 ~ 99.41	3.24
KD-26	99.42 ~ 99.57	3.39
KD-28		
KD-30	99.58 ~ 99.73	3.54
KD-32	117.26 ~ 117.41	2.74
KD-35	117.42 ~ 117.57	2.89
KD-36	117.58 ~ 117.73	3.04
KD -48R	139.26 ~ 139.41	2.74
	139.42 ~ 139.57	2.89
	139.58 ~ 139.73	3.04

Inch to Metric (mm) → Inch × 25.4
Metric (mm) to Inch → Metric ÷ 25.4 or Metric × 0.03937

Special / Custom Sizes on request

EDC、FDC-07A、FDC-32B

Collet

Cutter's shank dia.	Model			
	EDC-19	EDC-24	EDC-28	EDC-36
ϕ 2.8 ~ 3.0	EDC-0319	EDC-0324	–	–
ϕ 3.0 ~ 3.3	EDC-03319	EDC-03324	–	–
ϕ 3.3 ~ 3.6	EDC-03619	EDC-03624	–	–
ϕ 3.6 ~ 3.9	EDC-03919	EDC-03924	–	–
ϕ 3.9 ~ 4.2	EDC-04219	EDC-04224	EDC-04228	EDC-04236
ϕ 4.2 ~ 4.5	EDC-04519	EDC-04524	EDC-04528	EDC-04536
ϕ 4.5 ~ 5.0	EDC-0519	EDC-0524	EDC-0528	EDC-0536
ϕ 5.0 ~ 5.5	EDC-05519	EDC-05524	EDC-05528	EDC-05536
ϕ 5.5 ~ 6.0	EDC-0619	EDC-0624	EDC-0628	EDC-0636
ϕ 6.0 ~ 6.5	EDC-06519	EDC-06524	EDC-06528	EDC-06536
ϕ 6.5 ~ 7.0	EDC-0719	EDC-0724	EDC-0728	EDC-0736
ϕ 7.0 ~ 7.5	EDC-07519	EDC-07524	EDC-07528	EDC-07536
ϕ 7.5 ~ 8.0	EDC-0819	EDC-0824	EDC-0828	EDC-0836
ϕ 8.0 ~ 8.5	EDC-08519	EDC-08524	EDC-08528	EDC-08536
ϕ 8.5 ~ 9.0	EDC-0919	EDC-0924	EDC-0928	EDC-0936
ϕ 9.0 ~ 9.5	–	EDC-09524	EDC-09528	EDC-09536
ϕ 9.5 ~ 10.0	–	EDC-1024	EDC-1028	EDC-1036
ϕ 10.0 ~ 10.5	–	EDC-10524	EDC-10528	EDC-10536
ϕ 10.5 ~ 11.0	–	EDC-1124	EDC-1128	EDC-1136
ϕ 11.0 ~ 11.5	–	EDC-11524	EDC-11528	EDC-11536
ϕ 11.5 ~ 12.0	–	EDC-1224	EDC-1228	EDC-1236
ϕ 12.0 ~ 12.5	–	–	EDC-12528	EDC-12536
ϕ 12.5 ~ 13.0	–	–	EDC-1328	EDC-1336
ϕ 13.0 ~ 13.5	–	–	EDC-13528	EDC-13536
ϕ 13.5 ~ 14.0	–	–	EDC-1428	EDC-1436
ϕ 14.0 ~ 14.5	–	–	EDC-14528	EDC-14536
ϕ 14.5 ~ 15.0	–	–	EDC-1528	EDC-1536
ϕ 15.0 ~ 15.5	–	–	EDC-15528	EDC-15536
ϕ 15.5 ~ 16.0	–	–	EDC-1628	EDC-1636
ϕ 16.0 ~ 16.5	–	–	–	EDC-16536
ϕ 16.5 ~ 17.0	–	–	–	EDC-1736
ϕ 17.0 ~ 17.5	–	–	–	EDC-17536
ϕ 17.5 ~ 18.0	–	–	–	EDC-1836
ϕ 18.0 ~ 18.5	–	–	–	EDC-18536
ϕ 18.5 ~ 19.0	–	–	–	EDC-1936
ϕ 19.0 ~ 19.5	–	–	–	EDC-19536
ϕ 19.5 ~ 20.0	–	–	–	EDC-2036
ϕ 20.0 ~ 20.5	–	–	–	EDC-20536
ϕ 20.5 ~ 21.0	–	–	–	EDC-2136
ϕ 21.0 ~ 21.5	–	–	–	EDC-21536
ϕ 21.5 ~ 22.0	–	–	–	EDC-2236

Cutter's shank dia.	Model
	FDC-07A
ϕ 0.5 ~ 1.0	FDC-01007A
ϕ 1.0 ~ 1.5	FDC-01507A
ϕ 1.5 ~ 2.0	FDC-02007A
ϕ 2.0 ~ 2.5	FDC-02507A
ϕ 2.5 ~ 3.0	FDC-03007A
ϕ 3.0 ~ 3.5	FDC-03507A
ϕ 3.5 ~ 4.0	FDC-04007A
ϕ 4.0 ~ 4.5	FDC-04507A
ϕ 4.5 ~ 5.0	FDC-05007A
ϕ 5.0 ~ 5.5	FDC-05507A
ϕ 5.5 ~ 6.0	FDC-06007A
ϕ 6.0 ~ 6.5	FDC-06507A
ϕ 6.5 ~ 7.0	FDC-07007A

Cutter's shank dia.	Model
	FDC-32B
ϕ 20.0 ~ 20.5	FDC-20532B
ϕ 20.5 ~ 21.0	FDC-21032B
ϕ 21.0 ~ 21.5	FDC-21532B
ϕ 21.5 ~ 22.0	FDC-22032B
ϕ 22.0 ~ 22.5	FDC-22532B
ϕ 22.5 ~ 23.0	FDC-23032B
ϕ 23.0 ~ 23.5	FDC-23532B
ϕ 23.5 ~ 24.0	FDC-24032B
ϕ 24.0 ~ 24.5	FDC-24532B
ϕ 24.5 ~ 25.0	FDC-25032B
ϕ 25.0 ~ 25.5	FDC-25532B
ϕ 25.5 ~ 26.0	FDC-26032B
ϕ 26.0 ~ 26.5	FDC-26532B
ϕ 26.5 ~ 27.0	FDC-27032B
ϕ 27.0 ~ 27.5	FDC-27532B
ϕ 27.5 ~ 28.0	FDC-28032B
ϕ 28.0 ~ 28.5	FDC-28532B
ϕ 28.5 ~ 29.0	FDC-29032B
ϕ 29.0 ~ 29.5	FDC-29532B
ϕ 29.5 ~ 30.0	FDC-30032B
ϕ 30.0 ~ 30.5	FDC-30532B
ϕ 30.5 ~ 31.0	FDC-31032B
ϕ 31.0 ~ 31.5	FDC-31532B
ϕ 31.5 ~ 32.0	FDC-32032B

EDC

Ordering Example

EDC - 065 19

MAX. chucking dia. 19 Series

FDC-07A

Ordering Example

FDC - 060 07 A

MAX. chucking dia. | Accuracy

07 Series

FDC-32B

Ordering Example

FDC - 310 32 B

MAX. chucking dia. | Accuracy

32 Series

Inch to Metric (mm) → Inch × 25.4
Metric (mm) to Inch → Metric ÷ 25.4 or Metric × 0.03937

Special / Custom Sizes on request

EDC Collet Dimension

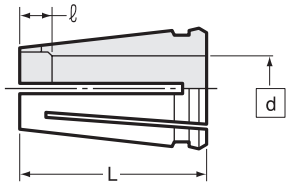

Collet	EDC-d19						EDC-d24				EDC-d28								EDC-d36							
Nut	KDP-1916						KDP-2422				KDP-2825								KDP-3632							
L	25				20		25		30		25		40				30		25		45				40	
d ℓ	d	ℓ	d	ℓ	d	ℓ	d	ℓ	d	ℓ	d	ℓ	d	ℓ	d	ℓ	d	ℓ	d	ℓ	d	ℓ	d	ℓ	d	ℓ
	3.0	7.0	5.0	4.5	8.5	0	3.0	7.0	4.5	11.5	4.2	7.0	4.5	18.5	12.5	4.5	14.5	0	4.2	4.0	4.5	23.5	12.5	7.0	20.5	0
	3.3	7.0	5.5	4.0	9.0	0	3.3	7.0	5.0	9.5			5.0	16.5	13.0	4.0	15.0	0			5.0	21.5	13.0	6.5	21.0	0
	3.6	7.0	6.0	4.0			3.6	7.0	5.5	9.0			5.5	16.0	13.5	0	15.5	0			5.5	21.0	13.5	6.0	21.5	0
	3.9	7.0	6.5	4.0			3.9	7.0	6.0	8.5			6.0	13.0	14.0	0	16.0	0			6.0	17.0	14.0	6.0	22.0	0
	4.2	7.0	7.0	4.0			4.2	7.0	6.5	8.0			6.5	13.0							6.5	17.0	14.5	5.5		
	4.5	6.5	7.5	4.0					7.0	5.0			7.0	13.0							7.0	15.0	15.0	5.0		
			8.0	0					7.5	5.0			7.5	13.0							7.5	15.0	15.5	5.0		
									8.0	5.0			8.0	11.5							8.0	15.0	16.0	5.0		
									8.5	5.0			8.5	10.5							8.5	15.0	16.5	5.0		
									9.0	5.0			9.0	10.5							9.0	15.0	17.0	5.0		
									9.5	4.5			9.5	10.0							9.5	14.5	17.5	5.0		
									10.0	4.5			10.0	10.0							10.0	11.5	18.0	4.0		
									10.5	4.0			10.5	5.0							10.5	11.0	18.5	4.0		
									11.0	4.0			11.0	5.0							11.0	10.5	19.0	4.0		
									11.5	4.0			11.5	5.0							11.5	10.0	19.5	4.0		
									12.0	0			12.0	4.5							12.0	10.0	20.0	0		

Shrinkage Allowance：0.3mm for d 4.5 or smaller
0.5mm for d 5.0 or bigger

KDP Nut Dimension

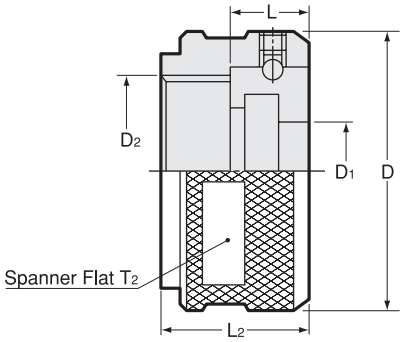

Code	Model	Collet	D	D1	D2	L	L2	T2
0070 00001916	**KDP -1916**	EDC-d19	26	10	M19 P=1	6.7	14	24
0070 00002422	**KDP -2422**	EDC-d24	32	12.5	M24 P=1	7.2	15	30
0070 00002825	**KDP -2825**	EDC-d28	36	16.5	M28 P=1	7.5	15	33
0070 00003632	**KDP -3632**	EDC-d36	46	23	M36 P=1	10.0	18.5	42

Inch to Metric (mm) → Inch × 25.4
Metric (mm) to Inch → Metric ÷ 25.4 or Metric × 0.03937

Special / Custom Sizes on request

Combination of accessories

Collet		Nut		Spanner	
Code	Model	Code	Model	Code	Model
2480 0120 ※※ 07	**FDC-07A**	0070 01001407	**KDP-1414**	—	**Flat17mm width**
0070 000190 ※※	**EDC-19**	0070 00001916	**KDP-1916**	0803 00000011	**S-1L**
0070 00024 ※※※	**EDC-24**	0070 00002422	**KDP-2422**	0803 00000013	**S-3L**
0070 00028 ※※※	**EDC-28**	0070 00002825	**KDP-2825**	0803 00000014	**S-4L**
0070 00036 ※※※	**EDC-36**	0070 00003632	**KDP-3632**	0803 00000015	**S-5L**
2480 003 ※※※ 32	**FDC-32B**	2544 00000032	**HDP-32**	0803 00000006	**S-6**

Spanner



Use of NT spanners on NT products prevent over-tightening and breakage.
As NT spanner flats are made to NT specifications, conventional spanner may not fit properly on NT products.

Collet insertion and removal

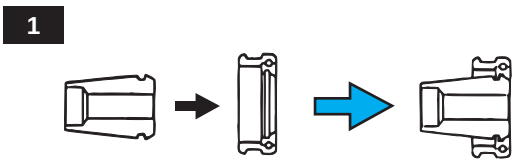



1.To insert
Place EDC collet into threaded end of KDP nut. Press down on rear of the collet to "clip" the collet into the nut.
2.To remove
While holding KDP nut firmly in one hand grasp EDC collet in the other while pushing sideways.

Inch to Metric (mm) → Inch × 25.4
Metric (mm) to Inch → Metric ÷ 25.4 or Metric × 0.03937

Special / Custom Sizes on request

Dimension for Collet and Nut

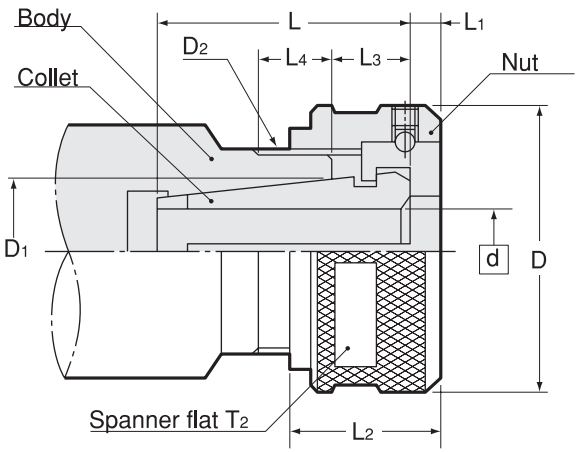

Collet	Nut	Spanner	d	D	D1	D2	L	L1	L2	L3	L4 MIN	T2
EDC -d19	KDP-1916	S-1L	2.8 ~ 9	26	13.73	M19 P=1	(25)	2.5	14	3.5 ~ 7.0	8	24
EDC -d24	KDP-2422	S-3L	2.8 ~ 12	32	18.59	M24 P=1	(30)	3.0	15	3.5 ~ 7.0	8	30
EDC -d28	KDP-2825	S-4L	3.9 ~ 16	36	22.3	M28 P=1	(40)	3.0	15	4.0 ~ 7.5	8	33
EDC -d36	KDP-3632	S-5L	3.9 ~ 22	46	30.6	M36 P=1	(45)	4.3	18.5	5.5 ~ 9.0	10	42

L dimension varies from size to size.

Dimension for body

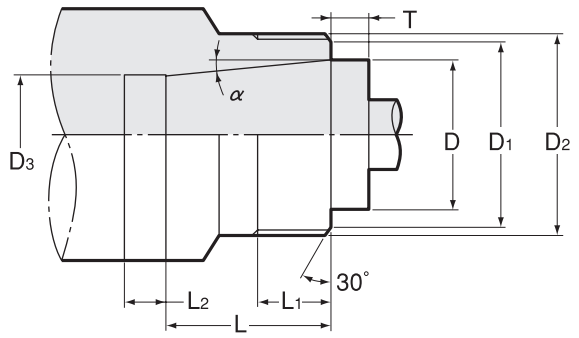

Collet	Nut	D	T ± 0.1	D1	D2	D3	L	L1 MIN	(L2)	α
EDC -d19	KDP-1916	13.73	4.24	18	M19 P=1	(10.8)	21	8	(6.0)	5° 59′
EDC -d24	KDP-2422	18.59	4.19	23	M24 P=1	(14.8)	26	8	(6.6)	5° 59′
EDC -d28	KDP-2825	22.3	4.52	27	M28 P=1	(18.5)	35.5	8	(10)	5° 59′
EDC -d36	KDP-3632	30.6	5	35	M36 P=1	(24.8)	39	10	(10)	5° 59′

D3 and L2 are for reference only and can be changed to your designing.
Contact us for taper gauge.

DS

Dust Seal

● By installing a dust seal into nut, chips are prevented from entering. To insert dust seal, apply some adhesive to nut and press down on the dust seal to snap it into place.

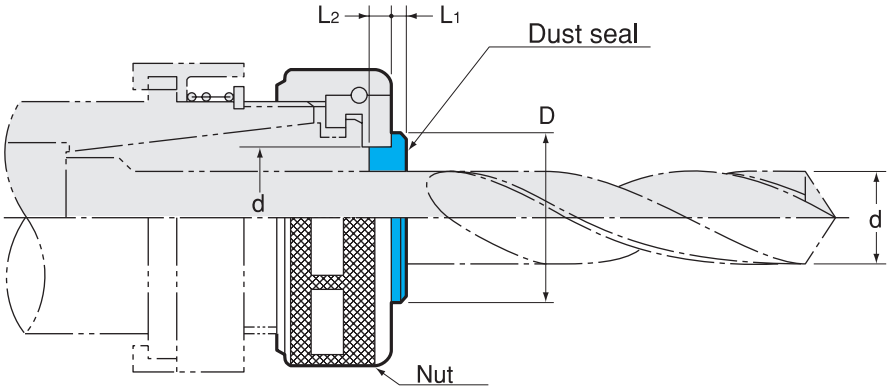

⚠ Applicable only for KDP series and HDP32 nut.

Code	Collet	Nut	Collet	d	D	d	L1	L2
0071 00009 ※※※	**DS9-**[d]	KDP-1916	EDC-19	2.8 ~ 9	15	10	1.5	2.3
0071 00012 ※※※	**DS12-**[d]	KDP-2422	EDC-24	2.8 ~ 11.5	18	12.5	1.5	2.7
0071 00016 ※※※	**DS16-**[d]	KDP-2825	EDC-28	4.0 ~ 15.5	22	16.5	2	2.7
0071 00022 ※※※	**DS22-**[d]	KDP-3632	EDC-36	4.0 ~ 22	30	23	2	4
0071 00032 ※※※	**DS32-**[d]	HDP-32	FDC-32B	20.0 ~ 32	40	33	2	4

1.Shank diameter of a cutting tool will be inserted in " ※※※ ". Product code for DS16-12.0 will be 0071 00016120 .
2.When ordering, please specify tool shank diameter.

Ordering Example

DS 16 - 12.0
dust seal | Tool shank dia. in use
Max. collet size

Inch to Metric (mm) → Inch × 25.4
Metric (mm) to Inch → Metric ÷ 25.4 or Metric × 0.03937

Special / Custom Sizes on request

MEMO

Dimension for Adjustable Shank (DIN Standard)

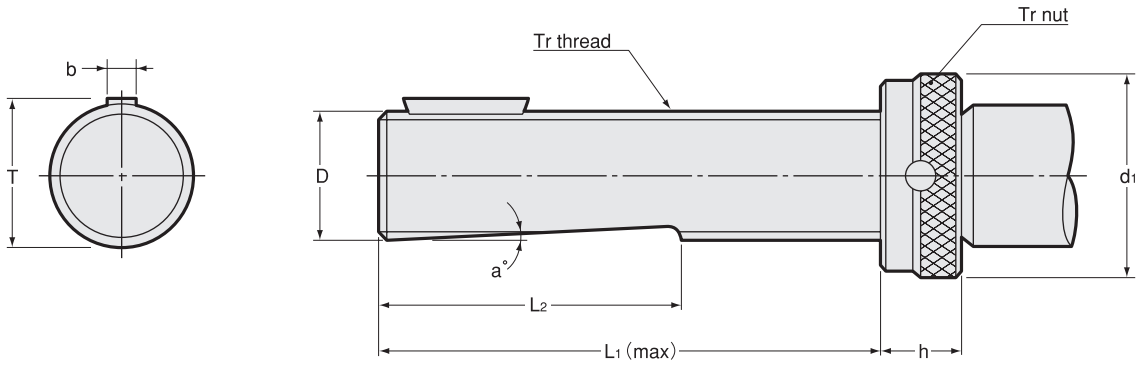

Tr thread size	D h6	d1	T	b h9	L1	L2	h	a °
Tr.16×1.5	16	25	17.1 $^{0}_{-0.25}$	5	73	43	12	2
Tr.20×2	20	32	21.1 $^{0}_{-0.25}$	5	76	46	12	2
Tr.28×2	28	40	29.5 $^{0}_{-0.25}$	6	83	51	12	2
Tr.36×2	36	50	37.5 $^{0}_{-0.35}$	8	104	65	14	2
Tr.48×2	48	67	49.9 $^{0}_{-0.35}$	10	126	76	18	2

DIN Spindle Dimension

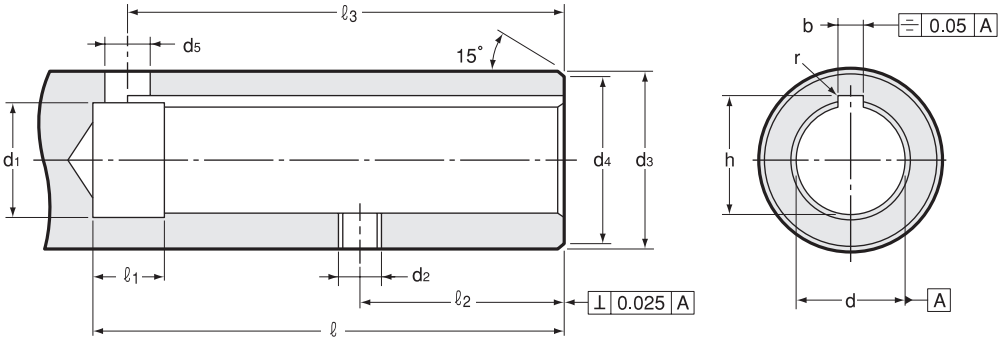

Size	d H6	ℓ (min)	d1	d2	d3 g6	d4	d5	ℓ 1	ℓ 2 ± 0.1	ℓ 3	b	h + 0.1 0	r
16	16	74	16.6	M6	25	24	6	8	34	70	5 $^{+0.145}_{+0.070}$	17.3	0.2
20	20	77	20.6	M6	32	31	6	8	34	73	5 $^{+0.145}_{+0.070}$	21.3	0.2
28	28	85	28.6	M8	40	39	8	10	38	80	6 $^{+0.145}_{+0.070}$	29.7	0.4
36	36	106	36.8	M8	50	49	10	10	45	101	8 $^{+0.170}_{+0.080}$	37.7	0.4
48	48	129	48.8	M10	67	66	12	12	57	123	10 $^{+0.170}_{+0.080}$	50.1	0.4

Inch to Metric (mm) → Inch × 25.4
Metric (mm) to Inch → Metric ÷ 25.4 or Metric × 0.03937

Special / Custom Sizes on request

KTP

Quick Change Stub Tapper

Applications

- Spindle Feed : Pitch Feed
- Designed for use on special-purpose machine, transfer machine etc.

Feature

- Small shank and projection length makes your tapping job very stable.
- Simple spindle designing/machining makes your machine compact.
- Radial float corrects alignment discrepancies between pre-drilled hole and tap.
- Quick change

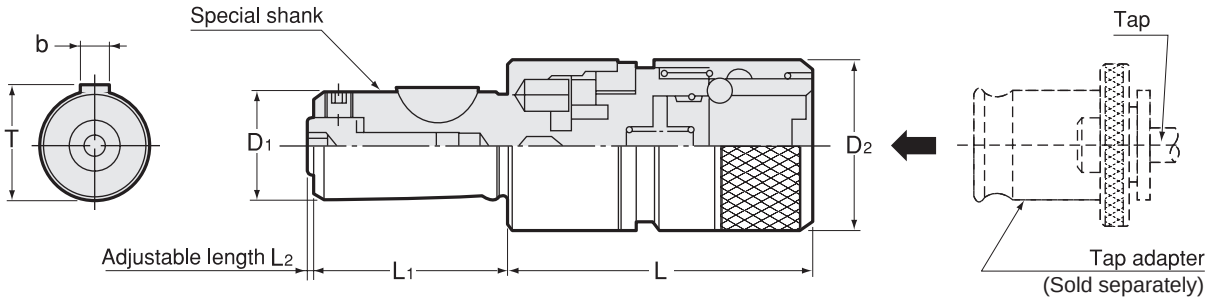

For capable tap sizes, please refer to P. 462-464 chart.

Code	Model	Tap Size	Adapter size	Radial float	D1 h6	D2	L	L1 ± 0.1	T	b	L2	kg
0831 00000000	**KTP0**	M3 ~ M8 (M10) U1/4 ~ U5/16 (U3/8)	0	0.25	16	23	54	31	17.1	5	0 ~ 2	0.2
0831 00000001	**KTP1**	M3 ~ M12 (M15) U1/4 ~ U7/16 (U9/16) Pipe(PT,PS,PF)1/8 ~ 1/4	1	0.5	20	32	58	37	21.1	5	0 ~ 2	0.4
0831 00000040	**KTP40**	M6 ~ M18 U1/4 ~ U3/4	40	0.75	28	40	78	49	29.5	6	0 ~ 2	0.8
0831 00000002	**KTP2**	M8 ~ M22 U3/8 ~ U7/8 Pipe(PT,PS,PF)1/8 ~ 1/2	2	1	28	50	85	49	29.5	6	0 ~ 2	1.2

1.Tap size in brackets are for light tapping only.
2.Tap adapter is sold separately.

Tap Adapter

P. 458

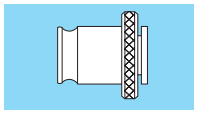

Ordering Example

KTP1

Adapter size

Inch to Metric (mm) → Inch × 25.4
Metric (mm) to Inch → Metric ÷ 25.4 or Metric × 0.03937

Special / Custom Sizes on request

KTL

Quick Change Stub Tapper

Applications

- Spindle Feed : All kinds of feed styles. For spindle feeds other than pitch feed, compression should not be activated while tapping.
- Designed for use on special-purpose machine, transfer machine, tapping machine etc.

Feature

- Small shank and projection length makes your tapping job very stable.
- Simple spindle designing/machining makes your machine compact.
- Length compensation allows for feed discrepancies between spindle and tap.
- Quick change

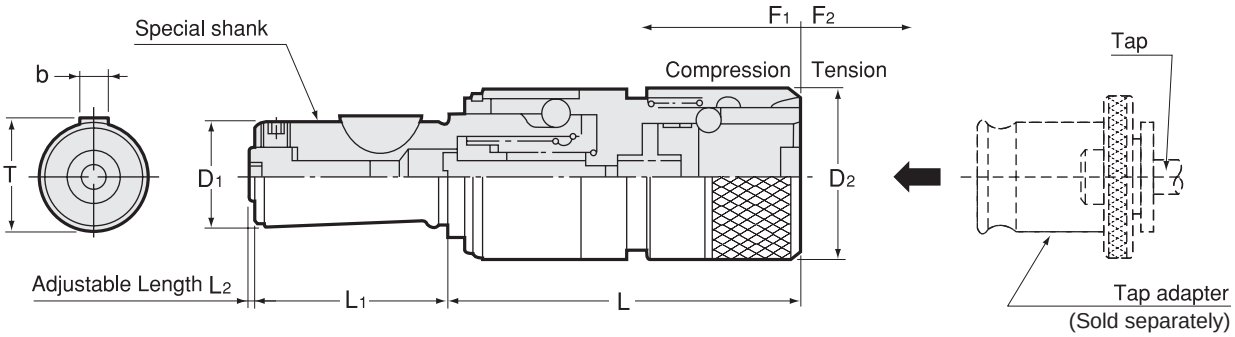

⚠ For capable tap sizes, please refer to P.462-464 chart.

Code	Model	Tap Size	Adapter size	Axial compensation		D1 h6	D2	L	L1 ± 0.1	T	b	L2	kg
				F1 Compression	F2 Tension								
0832 00000013	**KTL 013-3**	M3 ~ M8 (M10) U1/4 ~ U5/16 (U3/8)	0	3	10	16	23	65	31	17.1	5	0 ~ 2	0.2
0832 00010010	**010-0**			0	10	16	23	65	31	17.1	5	0 ~ 2	0.2
0832 00000113	**KTL 113-3**	M3 ~ M12 (M15) U1/4 ~ U7/16 (U9/16) Pipe(PT,PS,PF)1/8 ~ 1/4	1	3	10	20	32	70	37	21.1	5	0 ~ 2	0.4
0832 00010110	**110-0**			0	10	20	32	70	37	21.1	5	0 ~ 2	0.4
0832 00004015	**KTL 4015-3**	M6 ~ M18 U1/4 ~ U3/4	40	3	12	28	40	85	49	29.5	6	0 ~ 2	0.8
0832 00014012	**4012-0**			0	12	28	40	85	49	29.5	6	0 ~ 2	0.8
0832 00000215	**KTL 215-3**	M8 ~ M22 U3/8 ~ U7/8 Pipe(PT,PS,PF)1/8 ~ 1/2	2	3	12	28	50	95	49	29.5	6	0 ~ 2	1.2
0832 00010212	**212-0**			0	12	28	50	95	49	29.5	6	0 ~ 2	1.2

1.Tap size in brackets are for light tapping only.
2.In case of alignment discrepancy between predrilled hole and tap, use KTLP.
3.Tap adapter is sold separately.

Tap Adapter
P. 458

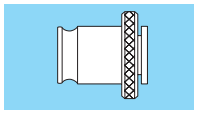

Ordering Example

KTL1 13 - 3
Adapter size | Compression(F1)
F1 + F2=13

Inch to Metric (mm) → Inch × 25.4
Metric (mm) to Inch → Metric ÷ 25.4 or Metric × 0.03937

Special / Custom Sizes on request

KTLP

Quick Change Stub Tapper

Applications

- Designed for use on special-purpose machine, transfer machine etc.
- Spindle Feed : All kinds of feed styles. For spindle feeds other than pitch feed, use a tapping chuck with tension so that compression does not work.

Feature

- Small shank and projection length makes your tapping job very stable.
- Simple spindle designing/machining makes your machine compact.
- Length compensation allows for feed discrepancies between spindle and tap.
- Radial float corrects alignment discrepancies between pre-drilled hole and tap.
- Quick change

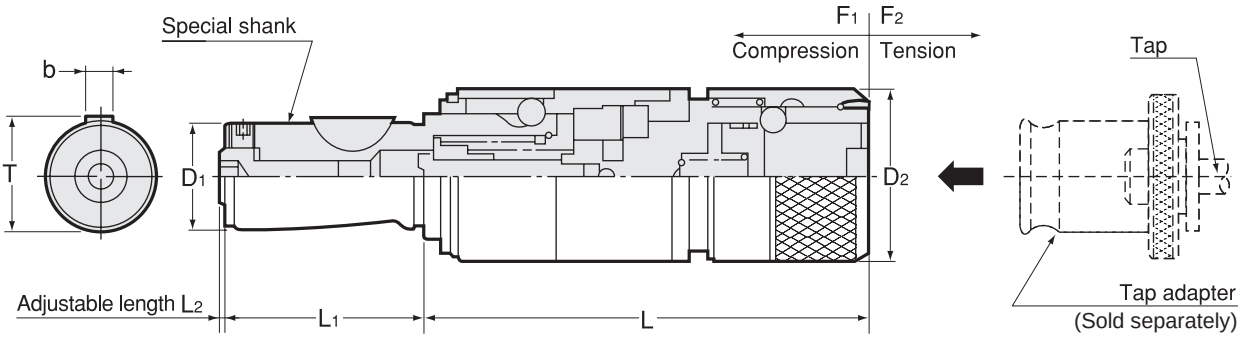

⚠ For capable tap sizes, please refer to P.462-464 chart.

Code	Model	Tap Size	Adapter size	Radial float	Axial compensation		D1 h6	D2	L	L1 ± 0.1	T	b	L2	kg
					F1 Compression	F2 Tension								
0833 00000013	**KTLP 013-3**	M3 ~ M8 (M10) U1/4 ~ U5/16 (U3/8)	0	0.25	3	10	16	23	83	31	17.1	5	0 ~ 2	0.3
0833 00010010	**010-0**			0.25	0	10	16	23	83	31	17.1	5	0 ~ 2	0.3
0833 00000113	**KTLP 113-3**	M3 ~ M12 (M15) U1/4 ~ U7/16 (U9/16) Pipe(PT,PS,PF)1/8 ~ 1/4	1	0.5	3	10	20	32	85	37	21.1	5	0 ~ 2	0.5
0833 00010110	**110-0**			0.5	0	10	20	32	85	37	21.1	5	0 ~ 2	0.5
0833 00004015	**KTLP 4015-3**	M6 ~ M18 U1/4 ~ U3/4	40	0.75	3	12	28	40	109	49	29.5	6	0 ~ 2	1.0
0833 00014012	**4012-0**			0.75	0	12	28	40	109	49	29.5	6	0 ~ 2	1.0
0833 00000215	**KTLP 215-3**	M8 ~ M22 U3/8 ~ U7/8 Pipe(PT,PS,PF)1/8 ~ 1/2	2	1	3	12	28	50	119	49	29.5	6	0 ~ 2	1.6
0833 00010212	**212-0**			1	0	12	28	50	119	49	29.5	6	0 ~ 2	1.6

1.Tap size in brackets are for light tapping only.
2.Tap adapter is sold separately.

Tap Adapter

P. 458

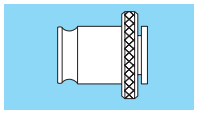

Ordering Example

KTLP1 13 - 3

Adapter size | Compression(F1)

F1 + F2=13

Inch to Metric (mm) → Inch × 25.4
Metric (mm) to Inch → Metric ÷ 25.4 or Metric × 0.03937

Special / Custom Sizes on request

Special Spindle Dimension

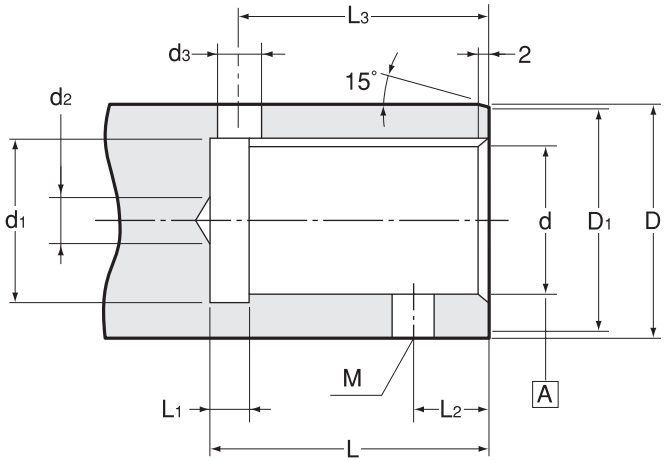

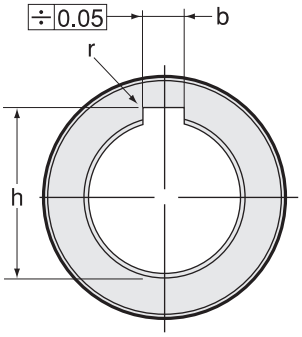

For KTP, KTL, KTLP

Size	d H6	L +0.5 0	d1	d2 (MAX)	D g6	D1	d3	L1	L2	M	L3	b +0.145 +0.07	h +0.1 +0	r
16	16	31	16.6	4	25	24	6	5	10	M6	27	5	17.3	0.2
20	20	37	20.6	6	32	31	6	5	10	M6	33	5	21.3	0.2
28	28	49	28.6	10	40	39	8	5	12	M8	44	6	29.7	0.4

Inch to Metric (mm) → Inch × 25.4
Metric (mm) to Inch → Metric ÷ 25.4 or Metric × 0.03937

Special / Custom Sizes on request

MEMO

QUICK CHANGE TAP ADAPTER

Basic 4 Models

WE

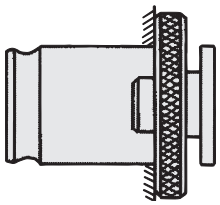

WE Quick Change

WES • B

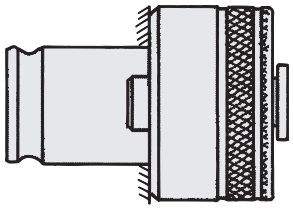

WE Quick Change

S Safety Torque

WEN

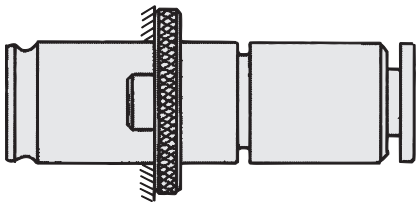

WE Quick Change

N Length Adjustment

WESN • B

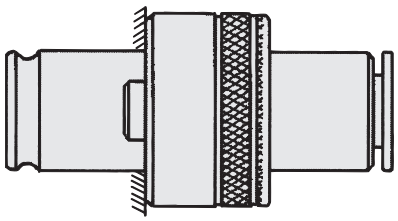

WE Quick Change

S Safety Torque

N Length Adjustment

In addition to the basic 4 models, wide variety of models (extended size, enlarged size, R type for short shank tap etc.) are available.

Inch to Metric (mm) → Inch × 25.4
Metric (mm) to Inch → Metric ÷ 25.4 or Metric × 0.03937

Special / Custom Sizes on request

WE : Quick Change

Tapping chuck and tapping adapter

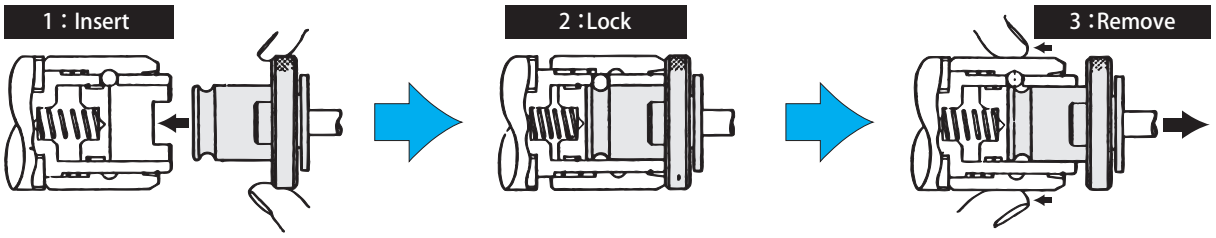

1 : Simply insert tap adapter into tapping chuck.
2 : Tapping chuck and tap adapter are connected firmly.

3 : Push down on operation sleeve of tapping chuck while removing tap adapter.

Tapping adapter and Tap

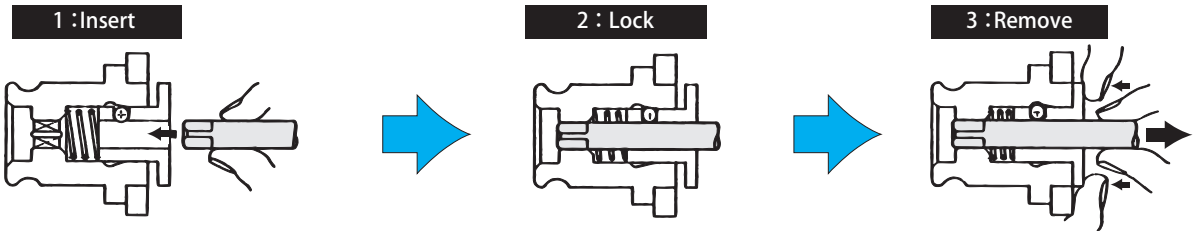

1 : Insert tap into bottom of tap adapter, and rotate tap manually to connect them firmly.
2 : Tap and adapter are connected firmly.
3 : Push down on ball bush while removing tap.

S : Safety torque

Safe torque device activates to prevent breakage tap when torque more than fixed amount is applied to tap. (Use with a tapper equipped with axial compensation mechanism.)

Normal operation (Normal machining)

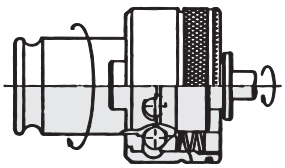

Empty operation (Abnormal machining torque)

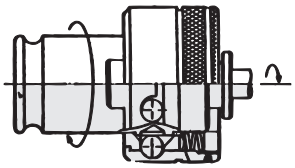

Reverse operation (Torque device dosen't move in the reverse direction)

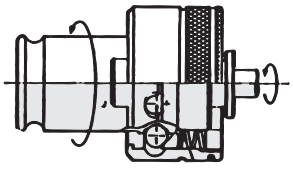

When using left handed tap adapter, please specify.

N : Length adjustment

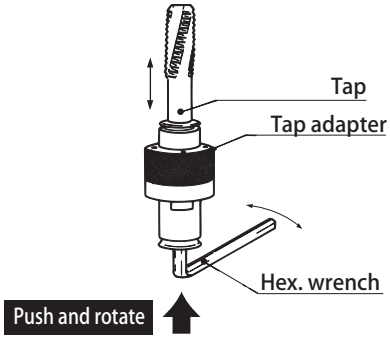

Insert hex. wrench into bottom of tap adapter and turn to adjust tool length.

Tap adapter with tool adjustment mechanism can be recommended for following conditions.
1.Tool adjustment with prestting gauge.
2.When tap length changes due to re-grinding.
3.When you do not want to use N/C machine tool compensation function.

WE

Quick Change Tap Adapter

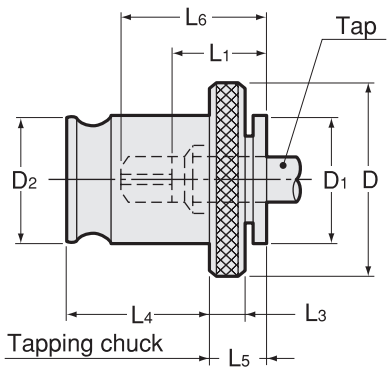

Applications

● For through hole, blind hole, right-hand thread and left-hand thread.

Feature

● Quick Change
※ In case you are afraid of tap breakage, choose a WES‧B and a tapping chuck with safety torque clutch.

⚠ For capable tap sizes, please refer to P.462-464 chart.

Code	Model	Tap Size	Chuck size	D	D1	D2	L1	L3	L4	L5	kg
0210 00000 ※※※	**WE0**	M3 ~ M8（M10） U1/4 ~ U5/16（U3/8）	0	22	12.5	13	15	4	19.5	7	0.03
0210 00001 ※※※	**WE1**	M3 ~ M12（M15） U1/4 ~ U7/16（U9/16） Pipe(PT,PS,PF)1/8 ~ 1/4	1 32	30	19	19	17	4	21.5	7	0.06
0210 00040 ※※※	**WE40**	M6 ~ M18 U1/4 ~ U3/4	40	40	25	26	30	5	32	13	0.12
0210 00002 ※※※	**WE2**	M8 ~ M22 U3/8 ~ U7/8	2	48	30	31	30	5	35	11	0.25
0210 00003 ※※※	**WE3**	M26 ~ M38 U1 ~ U1 3/8	3	70	47	48	44	6	55.5	14	0.8
—	**WE4**	7/8 ~ 1-3/4 M22 ~ M48	4	90	60	60	71	13	63	42	

1.Tap sizes in brackets are for light tapping only.
2.Calculate tap projection length from L1 dimension.
3.L1 and L6 dimensions fluctuate with tap sizes. Always take into account ± 1.5mm allowance.
4.Refer to P.462 for tap shank dia. and square dimension.

Ordering Example

WE1 **M8J**
Adapter size Tap size

Inch to Metric (mm) → Inch × 25.4
Metric (mm) to Inch → Metric ÷ 25.4 or Metric × 0.03937

Special / Custom Sizes on request

WES · B

Quick Change Tap Adapter

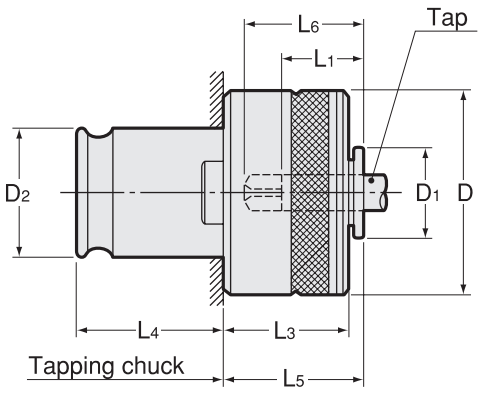

Applications

● For right-hand thread only. Through hole and blind hole.

Feature

● Quick Change
● Safety torque clutch actuates to prevent tap breakage when an excessive torque is applied to tap. In this case, a tapping chuck with compression device should be used together.

⚠ For capable tap sizes, please refer to P.462-464 chart.

Code	Model	Tap Size	Chuck size	D	D1	D2	L1	L3	L4	L5	kg
0210 06000 ※※※	**WES0B**	M3 ~ M8（M10） U1/4 ~ U5/16（U3/8）	0	23	12.5	13	15	20	19.5	21	0.06
0210 06001 ※※※	**WES1B**	M3 ~ M12（M15） U1/4 ~ U7/16（U9/16） Pipe(PT,PS,PF)1/8 ~ 1/4	1 32	32	19	19	17	25	21.5	25	0.15
0210 06040 ※※※	**WES40B**	M6 ~ M18 U1/4 ~ U3/4	40	40	25	26	30	27	32	30	0.3
0210 06002 ※※※	**WES2B**	M8 ~ M22 U3/8 ~ U7/8	2	50	30	31	30	31	35	33	0.6
0210 06003 ※※※	**WES3B**	M26 ~ M38 U1 ~ U1 3/8	3	72	47	48	44	41	55.5	45	1.5
—	**WES4B**	7/8 ~ 1-3/4 M22 ~ M48	4	95	60	60	71	61	63	68	

1.Tap sizes in brackets are for light tapping only.
2.Calculate tap projection length from L1 dimension.
3.Tapping chuck with compression device should be used together.
4.Specify PT, PS or PF when using a pipe tap, as each of them has various safety torque value.
5.L1 and L6 dimensions fluctuate with tap sizes. Always take into account ± 1.5mm allowance.
6.Refer to P.462 for tap shank dia. and square dimension.

Ordering Example

WES1B M8J
Adapter size Tap size

WEN

Quick Change Tap Adapter

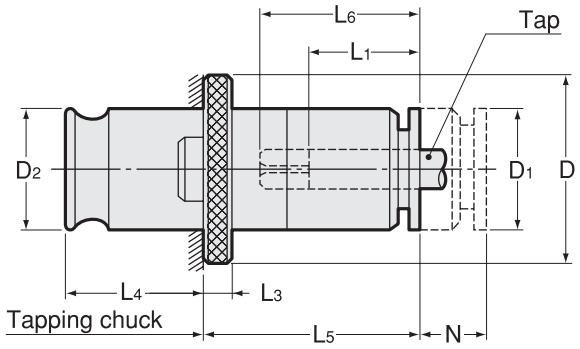

Applications

- For through hole, blind hole, right-hand thread and left-hand thread.

Feature

- Quick Change
- Length adjustment facilitates your depth control of re-ground tap.

For capable tap sizes, please refer to P.462-464 chart.

Code	Type	Tap Size	Chuck Size	N	D	D1	D2	L1	L3	L4	L5
—	WEN0	M3 ~ M8(M10) U1/4 ~ U5/16 (U3/8)	0	8	22	13	13	15	4	19.5	29
—	WEN1	#0-12, 1/4 - 1/2 M3-M12	1	10	30	19	19	17	4	21.5	34
—	WEN2	5/16 - 7/8 M8-M20	2	15	48	30	31	30	5	35	60
—	WEN3	13/16 - 1-3/8 M14-M33	3	25	70	48	48	44	6	55.5	83

1.Tap sizes in brackets are for light tapping only.
2.Calculate tap projection length from L1 dimension.
3.L1 and L6 dimensions fluctuate with tap sizes. Always take into account ± 1.5mm allowance.
4.Refer to P.462 for tap shank dia. and square dimension.

Ordering Example

WEN1 Adapter size **M11** Tap size

Inch to Metric (mm) → Inch × 25.4
Metric (mm) to Inch → Metric ÷ 25.4 or Metric × 0.03937

Special / Custom Sizes on request

WESN • B

Quick Change Tap Adapter

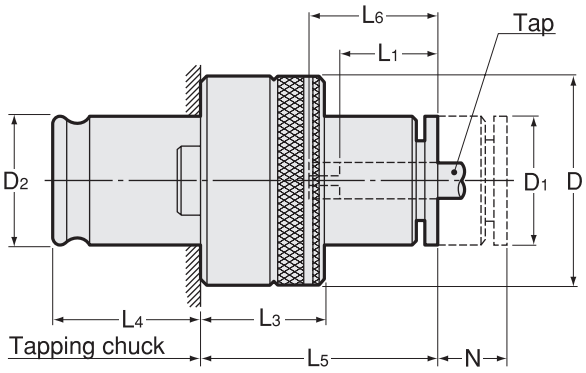

Applications

- For right-hand thread only. Through hole and blind hole.

Feature

- Quick Change
- Safety torque clutch actuates to prevent tap breakage when an excessive torque is applied to tap. In this case, a tapping chuck with compression device should be used together.
- Length Adjustment facilitates your depth control of re-ground tap.

For capable tap sizes, please refer to P.462-464 chart.

Code	Model	Tap Size	Chuck size	N Adjustable length	D	D1	D2	L1	L3	L4	L5	kg
0210 06100 ※※※	**WESN0B**	M3 ~ M8 (M10) U1/4 ~ U5/16 (U3/8)	0	8	23	13	13	15	20	19.5	28	0.1
0210 06101 ※※※	**WESN1B**	M3 ~ M12 (M15) U1/4 ~ U7/16 (U9/16) Pipe(PT,PS,PF)1/8 ~ 1/4	1 32	10	32	19	19	17	25	21.5	33	0.2
0210 06140 ※※※	**WESN40B**	M6 ~ M18 U1/4 ~ U3/4	40	15	40	25	26	30	27	32	53	0.4
0210 06102 ※※※	**WESN2B**	M8 ~ M22 U3/8 ~ U7/8	2	15	50	30	31	30	31	35	59	0.7
0210 06103 ※※※	**WESN3B**	M26 ~ M38 U1 ~ U1 3/8	3	25	72	48	48	44	41	55.5	82.5	2.1

1.Tap sizes in brackets are for light tapping only.
2.Calculate tap projection length from L1 dimension.
3.Tapping chuck with compression device should be used together.
4.Specify PT, PS or PF when using a pipe tap, as each of them has various safety torque value.
5.L1 and L6 dimensions fluctuate with tap sizes. Always take into account ± 1.5mm allowance.
6.Refer to P.462 for tap shank dia. and square dimension.

Ordering Example

WESN2B M12J

Adapter size Tap size

Tapping Capacity

Dimension L6

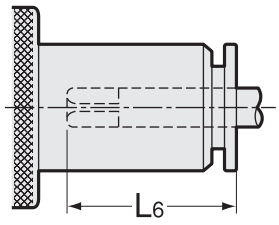

Symbol

◎ : For JIS (old) Tap

● : For Coarse Thread Tap

※ : For light machining on aluminum alloy and the like

For capable tap sizes, please refer to P.462-464 chart.

WESN・B、WES・B、WE

Tap Dimension						WESN・B WES・B WE 0		WESN・B WES・B WE 1		WESN・B WES・B WE 40		WESN・B WES・B WE 2		WESN・B WES・B WE 3	
Metric Thread		Uuified Thread	Whit-worth Thread	Shank Dia. Φ	Square □		L6		L6		L6		L6		L6
M3		NO5,NO6		4	3.2	◎	22	◎	23						
M4	M4.5	NO8		5	4	◎	22.5	◎	24.5						
M5	M5.5	NO10,NO12		5.5	4.5	◎	22.5	◎	24.5						
M6		U1/4	W1/4	6	4.5	◎	22	◎	24.5	◎	36.5				
		U5/16	W5/16	6.1	5	◎	23	◎	25	◎	37.5				
M8	M7			6.2	5	◎	23	◎	25.5	◎	37	◎	37		
M10	M9	U3/8	W3/8	7	5.5	※	23.5	◎	25.5	◎	37	◎	37		
	M11	U7/16	W7/16	8	6			◎	26.5	●	38.5	●	38.5		
M12				8.5	6.5			◎	26.5	●	38	●	38		
		U1/2	W1/2	9	7			◎	27	◎	38.5	◎	38.5		
	M14 M15	U9/16	W9/16	10.5	8			※	28	●	40	●	40		
		U5/8	W5/8	12	9					◎	41.5	◎	41.5		
M16				12.5	10					●	42	●	42		
	M17			13	10					◎	42	◎	42		
	M18	U3/4	W3/4	14	11					◎	43.5	◎	43.5		
M20				15	12							◎	44		
	M22	U7/8	W7/8	17	13							◎	45		
	M27 M26	U1	W1	20	15									●	62
	M28			21	17									●	63.5
		U1 1/8	W1 1/8	22	17									●	62.5
M30				23	17									●	62
	M32	U1 1/4	W1 1/4	24	19									●	66
	M33			25	19									●	66
	M35 M34	U1 3/8	W1 3/8	26	21									●	68
M36	M38			28	21									●	67
Pipe Tap Dimension															
PT		PS	PF	ϕ	□										
1/8		1/8	1/8	8	6			◎	26.5						
1/4		1/4	1/4	11	9			◎	29						

Inch to Metric (mm) → Inch × 25.4
Metric (mm) to Inch → Metric ÷ 25.4 or Metric × 0.03937

Special / Custom Sizes on request

Tapping Capacity

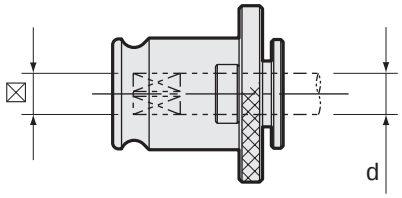

ANSI

Unit : Inch

Type	Chuck size	Tap size	ϕ d Tap Shank	☒ Drive Square
WE0 WES0B WEN0 WESN0B	0	#0-6	0.141	0.110
		#8	0.168	0.131
		#10	0.194	0.152
		#12	0.220	0.165
		1/4	0.255	0.191
		5/16	0.318	0.238
WE1 WES1B WEN1 WESN1B	1	#0-6	0.141	0.110
		#8	0.168	0.131
		#10	0.194	0.152
		#12	0.220	0.165
		1/4	0.255	0.191
		5/16	0.318	0.238
		3/8	0.381	0.286
		7/16	0.323	0.242
		1/2	0.367	0.275
		1/8SPT	0.313	0.234
		1/8LPT	0.437	0.328
WE2 WES2B WEN2 WESN2B	2	5/16	0.318	0.238
		3/8	0.381	0.286
		7/16	0.323	0.242
		1/2	0.367	0.275
		9/16	0.429	0.322
		5/8	0.480	0.360
		11/16	0.542	0.406
		3/4	0.590	0.442
		13/16	0.652	0.489
		7/8	0.697	0.523
		1/4PT	0.562	0.421
		3/8PT	0.700	0.531
		1/2PT	0.687	0.515
WE3 WES3B WEN3 WESN3B	3	13/16	0.652	0.489
		7/8	0.697	0.523
		15/16	0.760	0.570
		1	0.800	0.600
		1-1/8	0.896	0.672
		1-1/4	1.021	0.766
		1-3/8	1.108	0.831
		1/2PT	0.687	0.515
		3/4PT	0.906	0.679
		1PT	1.125	0.843
WE4 WES4B	4	7/8	0.697	0.523
		15/16	0.760	0.570
		1	0.800	0.600
		1-1/8	0.896	0.672
		1-1/4	1.021	0.766
		1-3/8	1.108	0.831
		1-1/2	1.233	0.925
		1-3/4	1.430	1.072

ISO

Unit : Metric

Type	Chuck size	Tap size	ϕ d Tap Shank	☒ Drive Square
WE0 WES0B WEN0 WESN0B	0	Please contact NT USA for details.		
WE1 WES1B WEN1 WESN1B	1	M3-1	2.24	1.8
		M3.5, M2	2.5	2.0
		M2.5, M2.2	2.8	2.24
		M4-1, M3-2	3.15	2.5
		M4.5, M3.5	3.55	2.8
		M5-1, M4-2	4.0	3.15
		M6-1	4.5	3.55
		M5-2	5.0	4.0
		M5-3	5.6	4.5
		M8-1, M6-2	6.3	5.0
		M7	7.1	5.6
		M11, M10-1, M8-2	8.0	6.3
		M12, M9	9.0	7.1
		M10-2	10.0	8.0
		M14	11.2	9.0
WE2 WES2B WEN2 WESN2B	2	M5-1, M4-2	4.0	3.15
		M6-1	4.5	3.55
		M5-2	5.0	4.0
		M5-3	5.6	4.5
		M8-1, M6-2	6.3	5.0
		M7	7.1	5.6
		M11, M10-1, M8-2	8.0	6.3
		M12, M9	9.0	7.1
		M10-2	10.0	8.0
		M14	11.2	9.0
		M16	12.5	10.0
		M20, M18	14.0	11.2
		M22	16.0	12.5
		M24	18.0	14.0
WE3 WES3B WEN3 WESN3B	3	M12, M9	9.0	7.1
		M10-2	10.0	8.0
		M14	11.2	9.0
		M16	12.5	10.0
		M20, M18	14.0	11.2
		M22	16.0	12.5
		M24	18.0	14.0
		M30, M27	20.0	16.0
		M33-1	22.4	18.0
		M36, M33-2	25.0	20.0
		M42, M39	28.0	22.4
WE4 WES4B	4	M22	16.0	12.5
		M24	18.0	14.0
		M30, M27	20.0	16.0
		M33-1	22.4	18.0
		M36, M33-2	25.0	20.0
		M42, M39	28.0	22.4

Inch to Metric (mm) → Inch × 25.4
Metric (mm) to Inch → Metric ÷ 25.4 or Metric × 0.03937

Special / Custom Sizes on request

Tapping Capacity

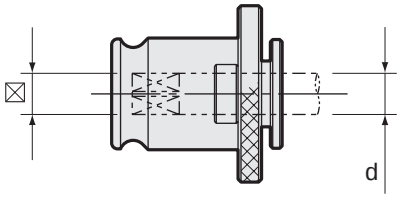

DIN

Unit : Metric

Type	Chuck size	Tap size	ϕ d Tap Shank	☒ Drive Square
WE0 WES0B WEN0 WESN0B	0	M3, M5	3.5	2.7
		M4, M6	4.5	3.4
		M5, M6, M8	6.0	4.9
		M10	7.0	5.5
		M8, M10	8.0	6.2
WE1 WES1B WEN1 WESN1B	1	M3, M5	3.5	2.7
		M3.5	4.0	3.0
		M4, M6	4.5	3.4
		M5, M6, M8	6.0	4.9
		M10	7.0	5.5
		M8, M10	8.0	6.2
		M12	9.0	7.0
		M10	10.0	8.0
		M14	11.0	9.0
WE2 WES2B WEN2 WESN2B	2	M3, M5	3.5	2.7
		M3.5	4.0	3.0
		M4, M6	4.5	3.4
		M5, M6, M8	6.0	4.9
		M10	7.0	5.5
		M8, M10	8.0	6.2
		M12	9.0	7.0
		M10	10.0	8.0
		M14	11.0	9.0
		M16	12.0	9.0
		M18	14.0	11.0
		M20	16.0	12.0
		M22, M24	18.0	14.5
WE3 WES3B WEN3 WESN3B	3	M12	9.0	7.0
		M10	10.0	8.0
		M14	11.0	9.0
		M16	12.0	9.0
		M18	14.0	11.0
		M20	16.0	12.0
		M22, M24	18.0	14.5
		M27, M30	20.0	16.0
		M33, M36	22.0	18.0
		M36	25.0	20.0
WE4 WES4B	4	M22, M24	18.0	14.5
		M27, M30	20.0	16.0
		M30	22.0	18.0
		M33, M36	25.0	20.0
		M36	28.0	22.0
		M39, M42	32.0	24.0
		M45, M48	36.0	29.0

JIS

Unit : Metric

Type	Chuck size	Tap size	ϕ d Tap Shank	☒ Drive Square
WE0 WES0B WEN0 WESN0B	0	M3	4.0	3.2
		M4, M4.5	5.0	4.0
		M5, M5.5	5.5	4.5
		M6	6.0	4.5
		M7, M8	6.2	5.0
		M9, M10	7.0	5.5
		M11	8.0	6.0
WE1 WES1B WEN1 WESN1B	1	M3	4.0	3.2
		M4, M4.5	5.0	4.0
		M5, M5.5	5.5	4.5
		M6	6.0	4.5
		M7, M8	6.2	5.0
		M9, M10	7.0	5.5
		M11	8.0	6.0
		M12	8.5	6.5
		M13	9.5	7.0
		M14, M15	10.5	8.0
WE2 WES2B WEN2 WESN2B	2	M6	6.0	4.5
		M7, M8	6.2	5.0
		M9, M10	7.0	5.5
		M11	8.0	6.0
		M12	8.5	6.5
		M13	9.5	7.0
		M14, M15	10.5	8.0
		M16	12.5	10.0
		M17	13.0	10.0
		M18	14.0	11.0
		M20	15.0	12.0
		M22	17.0	13.0
WE3 WES3B WEN3 WESN3B	3	M14, M15	10.5	8.0
		M16	12.5	10.0
		M17	13.0	10.0
		M18	14.0	11.0
		M20	15.0	12.0
		M22	17.0	13.0
		M24, M25	19.0	15.0
		M26, M27	20.0	15.0
		M28	21.0	17.0
		M30	23.0	17.0
		M32	24.0	19.0
		M33	25.0	19.0
		M34, M35	26.0	21.0
		M36, M38	28.0	21.0
WE4 WES4B	4	M22	17.0	13.0
		M24, M25	19.0	15.0
		M26, M27	20.0	15.0
		M28	21.0	17.0
		M30	23.0	17.0
		M32	24.0	19.0
		M33	25.0	19.0
		M34, M35	26.0	21.0
		M36, M38	28.0	21.0
		M39, M40	30.0	23.0
		M42	32.0	26.0
		M45	35.0	26.0
		M48	38.0	29.0

Inch to Metric (mm) → Inch × 25.4
Metric (mm) to Inch → Metric ÷ 25.4 or Metric × 0.03937

Special / Custom Sizes on request

Torque Setting

Torque Wrench (for right thread) G type

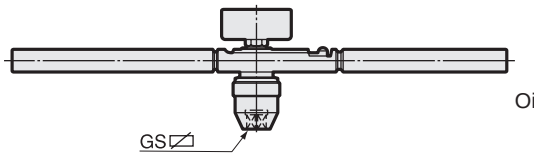

Oil pressure torque wrench with N-m, divisions.

Code	Model	Adapter size	(N-m)	GS
0150 09000000	**G0**	0	15	13
0150 09000001	**G1**	0.1	30	13
0150 09000002	**G2**	2.40	120	13
0150 09000003	**G3**	3	300	13
0150 09000004	**GE4-RD4**	4	1,000	25

Setting Shank GS type

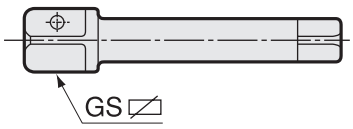

Code	Model	GS	Tapsize
0210 091100 ※※	**GS13-M ※※**	13	M3 ~ M38
0210 091110 ※※	**GS25-M ※※**	25	M22 ~ M48

1.Tap size will be inserted in " ※※ ".

2.Square head of setting shank fit into square part of torque wrench.

Setting Socket GW type

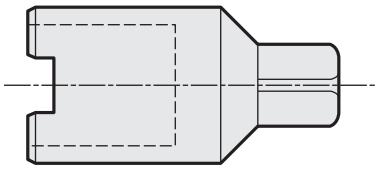

Code	Model	Adapter size
0210 09200000	**GW0**	0
0210 09200001	**GW1**	1
0210 09200040	**GW40**	40
0210 09200002	**GW2**	2
0210 09200003	**GW3**	3
0210 09200004	**GW4**	4

Fix square part of setting socket on vise, and then insert tap adapter into it for torque setting.

Adjustable Pin Wrench GWA type

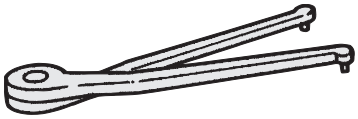

Code	Model	Pin diameter	Adapter size
0150 09300000	**GWA0**	2	0
0150 09300001	**GWA1**	2.5	1
0150 09300040	**GWA40**	3	2、3、40
0150 09300004	**GWA4**	6	4

Rotate sled ring of tap adapter by pin wrench for torque adjustment.

Torque setting

Tap adapter type WES・B

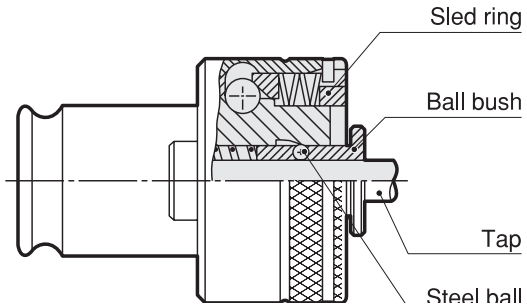

Tap adapter type WESN・B

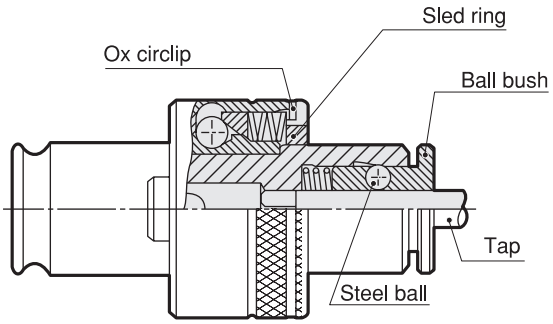

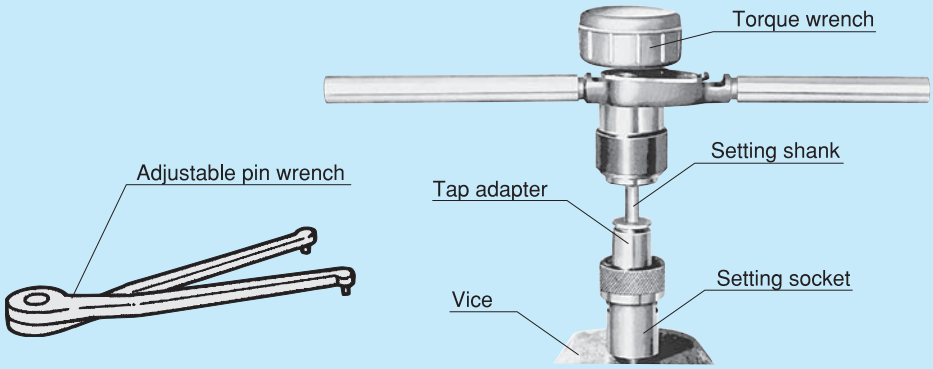

Torque setting by special tool

1) Fix square part of setting socket by using vise.
2) Insert tap adapter into the setting socket.
3) Insert the setting shank into the tap adapter.
4) Insert square part of torque wrench into head part of setting shank.
5) Check current torque.
6) When changing torque, remove horn part of ox circlip.
7) Insert adjustable pin wrench into pin hole of sled ring.
8) Rotate sled ring clockwise when increase torque or counterclockwise when decrease torque.
9) Check torque again after setting torque.
10) After setting the torque, return horn part of ox circlip to original position to fix sled ring.

Torque setting without special tool

1) Remove horn part of ox circlip.
2) Insert adjustable pin wrench into pin hole of sled ring.
3) Rotate sled ring clockwise when increase torque or counterclockwise when decrease torque. Sled ring rotation must be 45 ~ 90°
4) After setting the torque, return horn part of ox circlip to original position to fix sled ring.

Inch to Metric (mm) → Inch × 25.4
Metric (mm) to Inch → Metric ÷ 25.4 or Metric × 0.03937

Special / Custom Sizes on request

Guidelines for Torque Value

Metric Tap		Inch Tap		PT Tap		PS and PF Taps	
Tap Size	Torque（N-m）	Tap Size	Torque（N-m）	Tap Size	Torque（N-m）	Tap Size	Torque（N-m）
M3	1.0	1/8″	2.0	1/8″	26.0	1/8″	8.0
M4	2.3	1/4″	8.0	1/4″	35.0	1/4″	26.0
M5	3.7	5/16″	14.0	3/8″	47.0	3/8″	32.0
M6	6.0	3/8″	22.0	1/2″	100.0	1/2″	65.0
M7	7.5	7/16″	32.0	3/4″	120.0	3/4″	90.0
M8	12.0	1/2″	45.0	1″	240.0	1″	160.0
M9	14.0	9/16″	52.0	1 1/4″	270.0	1 1/4″	200.0
M10	22.0	5/8″	65.0	1 3/8″	300.0	1 3/8″	220.0
M11	26.0			1 1/2″	310.0	1 1/2″	240.0
M12	32.0	3/4″	90.0				
M14	47.0						
M16	52.0	7/8″	120.0				
M18	82.0						
M20	90.0	1″	160.0				
M22	100.0	1 1/8″	220.0				
M24	135.0	1 1/4″	250.0				
M27	160.0	1 3/8″	325.0				
M30	230.0	1 1/2″	360.0				
M33	250.0	1 5/8″	580.0				
M36	310.0	1 3/4″	630.0				
M39	325.0	1 7/8″	750.0				
M40（細）	210.0	2″	800.0				
M42	420.0						
M45	480.0						
M48	630.0						
M50（細）	260.0						

Inch to Metric (mm) → Inch × 25.4
Metric (mm) to Inch → Metric ÷ 25.4 or Metric × 0.03937

Special / Custom Sizes on request

D

Adjustable Adapter Short Design Type D



Applications

Drilling and spot-facing.

Feature

1. Both Tr and SSMA nut types are available in many sizes.
2. SSMA nut type is suitable for use with drilling chuck.

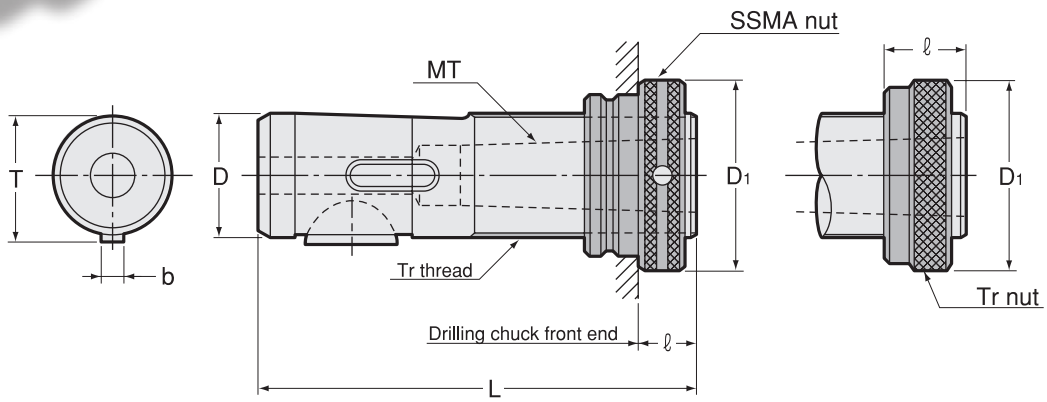

Model			MT	D	D1 ± 0.2		L	b	T	kg		ℓ	
					SSMA	Tr				SSMA	Tr	SSMA	Tr
D16	-1	/SSMA16 /Tr16	1	16	26	25	85	5	17.1	0.10	0.09	9 ~ 37	12 ~ 38
D20	-1	/SSMA20 /Tr20	1	20	33	32	88	5	21.1	0.19	0.18	9 ~ 37	12 ~ 38
D25	-1	/SSMA25	1	25	40	37	95	6	26.5	0.36	0.33	10 ~ 40	12 ~ 42
	-2	/Tr25	2	25	40	37	95	6	26.5	0.29	0.25	10 ~ 40	12 ~ 42
D26	-1	/Tr26	1	26	–	40	95	5	27.5	–	0.37	–	12 ~ 42
	-2		2	26	–	40	95	5	27.5	–	0.29	–	12 ~ 42
D28	-1	/SSMA28	1	28	42	40	95	6	29.5	0.45	0.42	10 ~ 40	12 ~ 42
	-2	/Tr28	2	28	42	40	95	6	29.5	0.37	0.34	10 ~ 40	12 ~ 42
D32	-2	/SSMA32	2	32	47	45	118	8	33.5	0.65	0.63	10 ~ 46	14 ~ 48
	-3	/Tr32	3	32	47	45	118	8	33.5	0.50	0.48	10 ~ 46	14 ~ 48
D35	-1	/Tr35	1	35	–	50	118	6	36.5	–	0.88	–	14 ~ 48
	-2		2	35	–	50	118	6	36.5	–	0.79	–	14 ~ 48
	-3		3	35	–	50	118	6	36.5	–	0.64	–	14 ~ 48
D36	-2	/SSMA36	2	36	54	50	118	8	37.5	0.88	0.83	10 ~ 46	14 ~ 48
	-3	/Tr36	3	36	54	50	118	8	37.5	0.74	0.68	10 ~ 46	14 ~ 48
D48	-2	/SSMA48 /Tr48	2	48	72	67	144	10	49.9	2.13	2.01	14 ~ 61	18 ~ 63
	-3		3	48	72	67	144	10	49.9	1.97	1.85	14 ~ 61	18 ~ 63
	-4		4	48	72	67	144	10	49.9	1.64	1.51	14 ~ 61	18 ~ 63
	-3-8		3	48	72	67	144	8	49.9	1.97	1.85	14 ~ 61	18 ~ 63
	-4-8		4	48	72	67	144	8	49.9	1.63	1.51	14 ~ 61	18 ~ 63

Ordering Example

D 20 - 1 / SSMA20

D MT1 SSMA nut

Inch to Metric (mm) → Inch × 25.4
Metric (mm) to Inch → Metric ÷ 25.4 or Metric × 0.03937

Special / Custom Sizes on request

Adjustable Adapter		SSMA	Tr
Model		Model	Model
D16	-1	SSMA16	Tr16
D20	-1	SSMA20	Tr20
D25	-1	SSMA25	Tr25
D25	-2	SSMA25	Tr25
D26	-1	—	Tr26
D26	-2	—	Tr26
D28	-1	SSMA28	Tr28
D28	-2	SSMA28	Tr28
D32	-2	SSMA32	Tr32
D32	-3	SSMA32	Tr32
D35	-1	—	Tr35
D35	-2	—	Tr35
D35	-3	—	Tr35
D36	-2	SSMA36	Tr36
D36	-3	SSMA36	Tr36
D48	-2	SSMA48	Tr48
D48	-3	SSMA48	Tr48
D48	-4	SSMA48	Tr48
D48	-3-8	SSMA48	Tr48
D48	-4-8	SSMA48	Tr48

1.To avoid troubles, please do not use our products with another manufacturer's products.
2.Refer to P.476 for DIN spindle dimension.

Ordering Example

SSMA	20	Tr	20
	Size		Size

F

Adjustable Adapter Long Design Type F

Applications

Drilling and spot-facing.

Feature

1. Both Tr and SSMA nut types are available in many sizes.
2. SSMA nut type is suitable for use with drilling chuck.

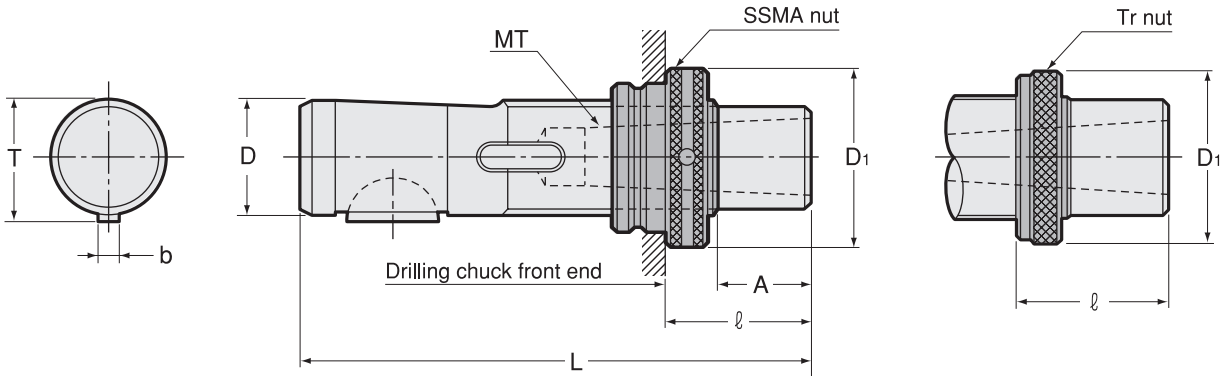

Model			MT	A	D	D1 ± 0.2		L	b	T	kg	ℓ	
						SSMA	Tr					SSMA	Tr
F16-1	-25	/SSMA16 /Tr16	1	25	16	26	25	110	5	17.1	0.13	34 ~ 62	37 ~ 63
	-50		1	50	16	26	25	135	5	17.1	0.16	59 ~ 87	62 ~ 88
	-75		1	75	16	26	25	160	5	17.1	0.19	84 ~ 112	87 ~ 113
	-100		1	100	16	26	25	185	5	17.1	0.22	109 ~ 137	112 ~ 138
F20-1	-25	/SSMA20 /Tr20	1	25	20	33	32	113	5	21.1	0.24	34 ~ 62	37 ~ 63
	-50		1	50	20	33	32	138	5	21.1	0.28	59 ~ 87	62 ~ 88
	-75		1	75	20	33	32	163	5	21.1	0.33	84 ~ 112	87 ~ 113
	-100		1	100	20	33	32	188	5	21.1	0.38	109 ~ 137	112 ~ 138
F25-1	-25	/SSMA25 /Tr25	1	25	25	40	37	120	6	26.5	0.44	35 ~ 65	37 ~ 67
	-50		1	50	25	40	37	145	6	26.5	0.52	60 ~ 90	62 ~ 92
	-75		1	75	25	40	37	170	6	26.5		85 ~ 115	87 ~ 117
	-100		1	100	25	40	37	195	6	26.5		110 ~ 140	112 ~ 142
F25-2	-25	/SSMA25 /Tr25	2	25	25	40	37	120	6	26.5	0.37	35 ~ 65	37 ~ 67
	-50		2	50	25	40	37	145	6	26.5	0.41	60 ~ 90	62 ~ 92
	-75		2	75	25	40	37	170	6	26.5	0.52	85 ~ 115	87 ~ 117
	-100		2	100	25	40	37	195	6	26.5	0.6	110 ~ 140	112 ~ 142
F26-1	-25	/Tr26	1	25	26	—	40	120	5	27.5	0.45	—	37 ~ 67
	-50		1	50	26	—	40	145	5	27.5	0.54	—	62 ~ 92
	-75		1	75	26	—	40	170	5	27.5	0.62	—	87 ~ 117
	-100		1	100	26	—	40	195	5	27.5	0.7	—	112 ~ 142
F26-2	-25	/Tr26	2	25	26	—	40	120	5	27.5	0.38	—	37 ~ 67
	-50		2	50	26	—	40	145	5	27.5	0.46	—	62 ~ 92
	-75		2	75	26	—	40	170	5	27.5	0.54	—	87 ~ 117
	-100		2	100	26	—	40	195	5	27.5	0.62	—	112 ~ 142
F28-1	-25	/SSMA28 /Tr28	1	25	28	42	40	120	6	29.5	0.55	35 ~ 65	37 ~ 67
	-50		1	50	28	42	40	145	6	29.5	0.65	60 ~ 90	62 ~ 92
	-75		1	75	28	42	40	170	6	29.5	0.74	85 ~ 115	87 ~ 117
	-100		1	100	28	42	40	195	6	29.5	0.84	110 ~ 140	112 ~ 142
F28-2	-25	/SSMA28 /Tr28	2	25	28	42	40	120	6	29.5	0.47	35 ~ 65	37 ~ 67
	-50		2	50	28	42	40	145	6	29.5	0.57	60 ~ 90	62 ~ 92
	-75		2	75	28	42	40	170	6	29.5	0.66	85 ~ 115	87 ~ 117
	-100		2	100	28	42	40	195	6	29.5	0.73	110 ~ 140	112 ~ 142

Inch to Metric (mm) → Inch × 25.4
Metric (mm) to Inch → Metric ÷ 25.4 or Metric × 0.03937

Special / Custom Sizes on request

Model			MT	A	D	D1 ± 0.2		L	b	T	kg	ℓ	
						SSMA	Tr					SSMA	Tr
F32-2	-30	/SSMA32 /Tr32	2	30	32	47	45	148	8	33.5	0.83	40 ~ 76	44 ~ 78
	-60		2	60	32	47	45	178	8	33.5	0.98	70 ~ 106	74 ~ 108
	-90		2	90	32	47	45	208	8	33.5		100 ~ 136	104 ~ 138
	-120		2	120	32	47	45	238	8	33.5		130 ~ 166	134 ~ 168
F32-3	-30	/SSMA32 /Tr32	3	30	32	47	45	148	8	33.5	0.67	40 ~ 66	44 ~ 78
	-60		3	60	32	47	45	178	8	33.5	0.81	70 ~ 106	74 ~ 108
	-90		3	90	32	47	45	208	8	33.5	0.97	100 ~ 136	104 ~ 138
	-120		3	120	32	47	45	238	8	33.5		130 ~ 166	134 ~ 168
F35-2	-30	/Tr35	2	30	35	–	50	148	6	36.5		–	44 ~ 78
	-60		2	60	35	–	50	178	6	36.5	1.18	–	74 ~ 108
	-90		2	90	35	–	50	208	6	36.5		–	104 ~ 138
	-120		2	120	35	–	50	238	6	36.5	1.56	–	134 ~ 168
F35-3	-30	/Tr35	3	30	35	–	50	148	6	36.5	0.83	–	44 ~ 78
	-60		3	60	35	–	50	178	6	36.5	1.03	–	74 ~ 108
	-90		3	90	35	–	50	208	6	36.5		–	104 ~ 138
	-120		3	120	35	–	50	238	6	36.5		–	134 ~ 168
F36-2	-30	/SSMA36 /Tr36	2	30	36	54	50	148	8	37.5	1.1	40 ~ 66	44 ~ 78
	-60		2	60	36	54	50	178	8	37.5	1.3	70 ~ 106	74 ~ 108
	-90		2	90	36	54	50	208	8	37.5		100 ~ 136	104 ~ 138
	-120		2	120	36	54	50	238	8	37.5		130 ~ 166	134 ~ 168
F36-3	-30	/SSMA36 /Tr36	3	30	36	54	50	148	8	37.5	0.94	40 ~ 66	44 ~ 78
	-60		3	60	36	54	50	178	8	37.5	1.1	70 ~ 106	74 ~ 108
	-90		3	90	36	54	50	208	8	37.5	1.34	100 ~ 136	104 ~ 138
	-120		3	120	36	54	50	238	8	37.5		130 ~ 166	134 ~ 168
F48-3	-40	/SSMA48 /Tr48	3	40	48	72	67	184	10	49.9		54 ~ 101	58 ~ 103
	-80		3	80	48	72	67	224	10	49.9		94 ~ 141	98 ~ 143
	-120		3	120	48	72	67	264	10	49.9		134 ~ 181	138 ~ 183
	-160		3	160	48	72	67	304	10	49.9		174 ~ 221	178 ~ 223
F48-4	-40	/SSMA48 /Tr48	4	40	48	72	67	184	10	49.9		54 ~ 101	58 ~ 103
	-80		4	80	48	72	67	224	10	49.9	2.53	94 ~ 141	98 ~ 143
	-120		4	120	48	72	67	264	10	49.9	3.02	134 ~ 181	138 ~ 183
	-160		4	160	48	72	67	304	10	49.9		174 ~ 221	178 ~ 223
F48-3	-40-8	/SSMA48 /Tr48	3	40	48	72	67	184	8	49.9	2.37	54 ~ 101	58 ~ 103
	-80-8		3	80	48	72	67	224	8	49.9		94 ~ 141	98 ~ 143
	-120-8		3	120	48	72	67	264	8	49.9		134 ~ 181	138 ~ 183
	-160-8		3	160	48	72	67	304	8	49.9		174 ~ 221	178 ~ 223
F48-4	-40-8	/SSMA48 /Tr48	4	40	48	72	67	184	8	49.9	2.02	54 ~ 101	58 ~ 103
	-80-8		4	80	48	72	67	224	8	49.9	2.52	94 ~ 141	98 ~ 143
	-120-8		4	120	48	72	67	264	8	49.9		134 ~ 181	138 ~ 183
	-160-8		4	160	48	72	67	304	8	49.9		174 ~ 221	178 ~ 223

1.To avoid troubles, please do not use our products with another manufacturer's products.
2.Refer to P.476 for DIN spindle dimension.

Ordering Example

F 20 - 1 - 50 / SSMA20

D MT1 A SSMA nut

H , M

Adjustable Adapter "H" And "M" Series

H Series

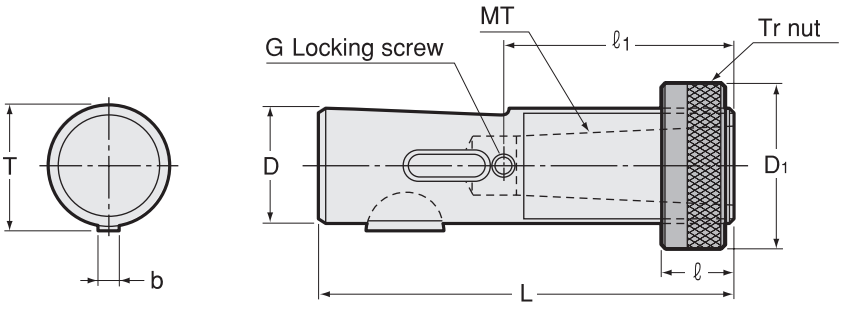

Code	Model	MT	D	D1 ± 0.2	L	b	T	ℓ	ℓ1	G	kg
0610 04111810	H -11810 /Tr18H	1	18	32	102	4	19.5	12 ~ 52	48	M6 P=1	0.17
0610 04111811	-11811 /Tr18H	1	18	32	112	4	19.5	12 ~ 62	48	M6 P=1	0.19
0610 04111812	-11812 /Tr18H	1	18	32	122	4	19.5	12 ~ 72	48	M6 P=1	0.21
0610 04111813	-11813 /Tr18H	1	18	32	132	4	19.5	12 ~ 82	48	M6 P=1	
0610 04111814	-11814 /Tr18H	1	18	32	142	4	19.5	12 ~ 92	48	M6 P=1	
0610 04112610	H -12610 /Tr26H	1	26	40	102	5	27.5	12 ~ 52	48	M6 P=1	0.40
0610 04112611	-12611 /Tr26H	1	26	40	112	5	27.5	12 ~ 62	48	M6 P=1	
0610 04112612	-12612 /Tr26H	1	26	40	122	5	27.5	12 ~ 72	48	M6 P=1	
0610 04112613	-12613 /Tr26H	1	26	40	132	5	27.5	12 ~ 82	48	M6 P=1	0.51
0610 04112614	-12614 /Tr26H	1	26	40	142	5	27.5	12 ~ 92	48	M6 P=1	
0610 04122610	H -22610 /Tr26H	2	26	40	102	5	27.5	12 ~ 52	56.3	M6 P=1	
0610 04122611	-22611 /Tr26H	2	26	40	112	5	27.5	12 ~ 62	56.3	M6 P=1	0.35
0610 04122612	-22612 /Tr26H	2	26	40	122	5	27.5	12 ~ 72	56.3	M6 P=1	0.39
0610 04122613	-22613 /Tr26H	2	26	40	132	5	27.5	12 ~ 82	56.3	M6 P=1	0.43
0610 04122614	-22614 /Tr26H	2	26	40	142	5	27.5	12 ~ 92	56.3	M6 P=1	

M Series

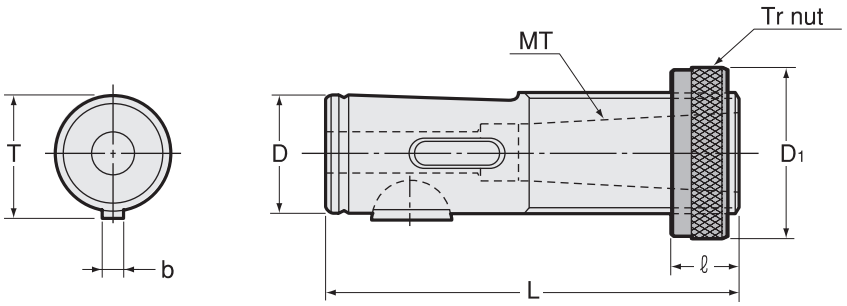

Code	Model	MT	D	D1 ± 0.2	L	b	T	ℓ	kg
0610 14300161	M1 -16×1 /Tr16	1	16	25	78	4	17.5	12 ~ 38	0.08
0610 14300201	M1 -20×1 /Tr20	1	20	32	78	5	22	12 ~ 38	0.17
0610 14300261	M1 -26×1 /Tr26	1	26	40	94	5	28	12 ~ 43	0.36
0610 14300262	-26×2 /Tr26	2	26	40	94	5	28	12 ~ 43	0.29
0610 14300281	M1 -28×1 /Tr28	1	28	40	94	5	30	12 ~ 43	0.41
0610 14300282	-28×2 /Tr28	2	28	40	94	5	30	12 ~ 43	0.34
0610 14300322	M1 -32×2 /Tr32	2	32	45	117	6	34.4	14 ~ 47	0.63
0610 14300323	-32×3 /Tr32	3	32	45	117	6	34.4	14 ~ 47	0.48

Ordering Example

M1 - 16 × 1 / Tr16

D MT1 Tr nut

Inch to Metric (mm) → Inch × 25.4
Metric (mm) to Inch → Metric ÷ 25.4 or Metric × 0.03937

Special / Custom Sizes on request

N

Adjustable Adapter "N" Series

N Series

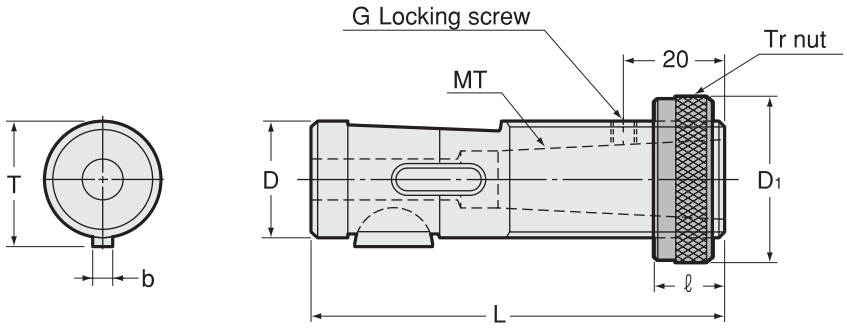

Code	Model	MT	D	D1 ± 0.2	L	b	T 0 -0.2	ℓ	G	kg
0610 02111611	N -1161 /Tr16N	1	16	25	85	4	17.5	12 ~ 37	M5 P=0.8	0.09
0610 02112011	N -1201 /Tr20N	1	20	32	85	5	22	12 ~ 37	M5 P=0.8	
0610 02112411	N -1241 /Tr24N	1	24	37	85	5	26	12 ~ 37	M5 P=0.8	0.27
0610 02112611	N -1261 /Tr26N	1	26	40	96	7	28.6	12 ~ 43	M6 P=1.0	
0610 02112621	-1262 /Tr26N	2	26	40	96	7	28.6	12 ~ 43	M6 P=1.0	0.30
0610 02113021	N -1302 /Tr30N	2	30	45	100	7	32.6	14 ~ 46	M6 P=1.0	0.47
0610 02113621	N -1362 /Tr36N	2	36	50	118	10	39.2	14 ~ 54	M6 P=1.0	0.84
0610 02113631	-1363 /Tr36N	3	36	50	118	10	39.2	14 ~ 54	M6 P=1.0	0.69
0610 02114831	N -1483 /Tr48N	3	48	67	142	12	51.2	18 ~ 64	M6 P=1.0	1.82
0610 02114841	-1484 /Tr48N	4	48	67	142	12	51.2	18 ~ 64	M6 P=1.0	

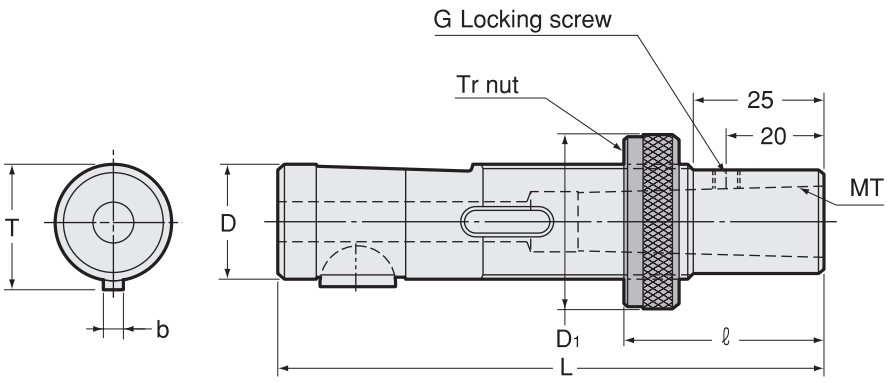

Code	Model	MT	D	D1 ± 0.2	L	b	T 0 -0.2	ℓ	G	kg
0610 02121611	N -2161 /Tr16N	1	16	25	110	4	17.5	38 ~ 62	M5 P=0.8	0.12
0610 02122011	N -2201 /Tr20N	1	20	32	110	5	22	38 ~ 62	M5 P=0.8	
0610 02122411	N -2241 /Tr24N	1	24	37	110	5	26	38 ~ 62	M5 P=0.8	
0610 02122611	N -2261 /Tr26N	1	26	40	121	7	28.6	38 ~ 68	M6 P=1.0	
0610 02122621	-2262 /Tr26N	2	26	40	121	7	28.6	38 ~ 68	M6 P=1.0	
0610 02123021	N -2302 /Tr30N	2	30	45	125	7	32.6	40 ~ 71	M6 P=1.0	
0610 02123621	N -2362 /Tr36N	2	36	50	143	10	39.2	40 ~ 79	M6 P=1.0	1.00
0610 02123631	-2363 /Tr36N	3	36	50	143	10	39.2	40 ~ 79	M6 P=1.0	0.84
0610 02124831	N -2483 /Tr48N	3	48	67	167	12	51.2	44 ~ 89	M6 P=1.0	
0610 02124841	-2484 /Tr48N	4	48	67	167	12	51.2	44 ~ 89	M6 P=1.0	

Ordering Example

N-2161 / Tr16N

Tr nut

Inch to Metric (mm) → Inch × 25.4
Metric (mm) to Inch → Metric ÷ 25.4 or Metric × 0.03937

Special / Custom Sizes on request

T

Adjustable Adapter "T" Series

T Series

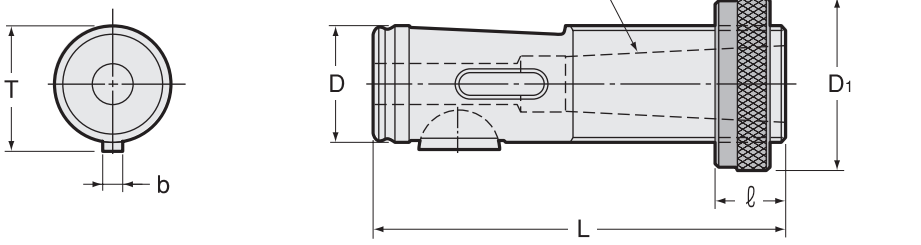

Code	Model	MT	D	D1 ± 0.2	L	b	T 0 -0.2	ℓ	kg
0610 03100116	T -1×16 /Tr16×2	1	16	25	80	3	17	12 ~ 35	0.08
0610 03100119	T -1×19 /Tr19	1	19	32	80	5	21	12 ~ 35	0.15
0610 03100122	T -1×22 /Tr22	1	22	32	92	5	24	12 ~ 40	0.23
0610 03100222	-2×22 /Tr22	2	22	32	92	5	24	12 ~ 40	0.15
0610 03100126	T -1×26 /Tr26	1	26	40	102	5	28	12 ~ 45	0.39
0610 03100226	-2×26 /Tr26	2	26	40	102	5	28	12 ~ 45	0.31
0610 03100335	T -3×35 /Tr35	3	35	50	122	7	38	14 ~ 52	0.66
0610 03100448	T -4×48 /Tr48	4	48	67	152	7	51	18 ~ 62	

Ordering Example

T - 1 × 16 / Tr16×2

MT1 D Tr nut

Inch to Metric (mm) → Inch × 25.4
Metric (mm) to Inch → Metric ÷ 25.4 or Metric × 0.03937

Special / Custom Sizes on request

Spindle Dimensions

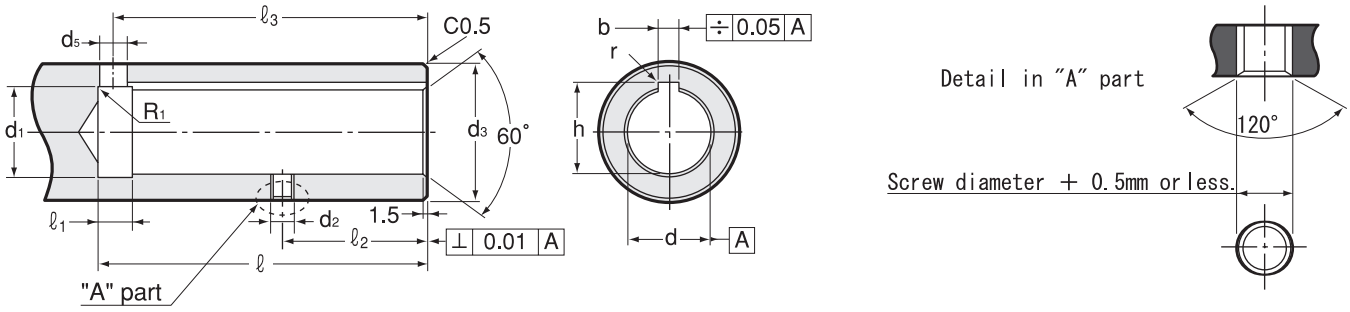

Chamfer 120°at “A” part. (Max. chamfering diameter = Screw diameter + 0.5 mm or less)

N Series

Size	d H6	ℓ (min)	d1	d2	d3 g6	d5	ℓ1	ℓ2 ± 0.1	ℓ3	b	h +0.1 0	r
16	16	81	17	M8 P=1.25	28	8	12	32	75	4 +0.078 +0.030	17.7	0.2
20	20	81	21	M8 P=1.25	32	8	12	32	75	5 +0.078 +0.030	22.5	0.2
24	24	81	25	M8 P=1.25	36	8	12	32	75	5 +0.078 +0.030	26.5	0.2
24	24	81	25	M8 P=1.25	38	8	12	32	75	5 +0.078 +0.030	26.5	0.2
26	26	92	27	M10 P=1.5	42	10	12	38	83	7 +0.098 +0.040	29.5	0.4
30	30	96	31	M10 P=1.5	50	10	12	42	87	7 +0.098 +0.040	33.5	0.4
36	36	114	37	M10 P=1.5	60	12	12	50	108	10 +0.098 +0.040	40	0.4
48	48	135	49	M10 P=1.5	75	14	12	57	126	12 +0.120 +0.050	52	0.4

H Series

Size	d H6	ℓ (min)	d1	d2	d3 g6	d4	d5	ℓ1	ℓ2 ± 0.1	ℓ3	b	h +0.1 0	r
18	18	92	18.6	M6 P=1.0	26	25	5	8	46	88	4 +0.145 +0.070	19.7	0.2
26	26	92	26.6	M6 P=1.0	35	34.5	6	10	46	87	5 +0.145 +0.070	27.7	0.2

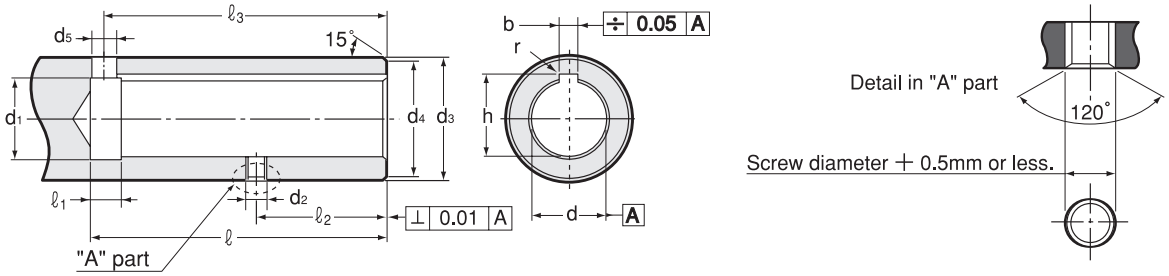

Chamfer 120°at “A” part. (Max. chamfering diameter = Screw diameter + 0.5 mm or less)

M Series

Size	d H6	ℓ (min)	d1	d2	d3 g6	d4	d5	ℓ 1	ℓ 2 ± 0.1	ℓ 3	b	h +0.1 0	r
16	16	68	16.6	M6 P=1.0	25	24	5	8	34	64	4 +0.145 +0.070	17.7	0.2
20	20	68	20.6	M8 P=1.25	32	31	6	8	34	64	5 +0.145 +0.070	22.2	0.2
26	26	84	26.6	M8 P=1.25	40	39	6	10	41	79	5 +0.145 +0.070	28.2	0.2
28	28	84	28.6	M8 P=1.25	40	39	6	10	41	79	5 +0.145 +0.070	30.2	0.2
32	32	105	32.8	M10 P=1.5	45	44	8	10	45	100	6 +0.145 +0.070	34.6	0.2

T Series

Size	d	ℓ (min)	d1	d2	d3 h7	d4	d5	ℓ 1	ℓ 2 ± 0.1	ℓ 3	b	h +0.3 +0.1
16	16 +0.027 +0.015	75	17	M6 P=0.75	25	24	4	10	31.3	66	3 +0.27 +0.19	17.5
19	19 +0.027 +0.015	75	20	M8 P=0.75	32	31	6	10	31.3	67	5 +0.28 +0.20	21.5
22	22 +0.032 +0.018	88	23	M8 P=0.75	36	35	6	10	36.3	80	5 +0.28 +0.20	24.5
26	26 +0.032 +0.018	98	28	M8 P=0.75	40	39	6	10	41.3	90	5 +0.28 +0.20	28.5
35	35 +0.038 +0.021	116	37	M8 P=0.75	52	51	8	10	46.3	106	7 +0.29 +0.21	38.5
48	48 +0.038 +0.021	147	50	M8 P=0.75	65	64	8	10	62.3	136	7 +0.29 +0.21	51.5

DIN Spindle Dimension

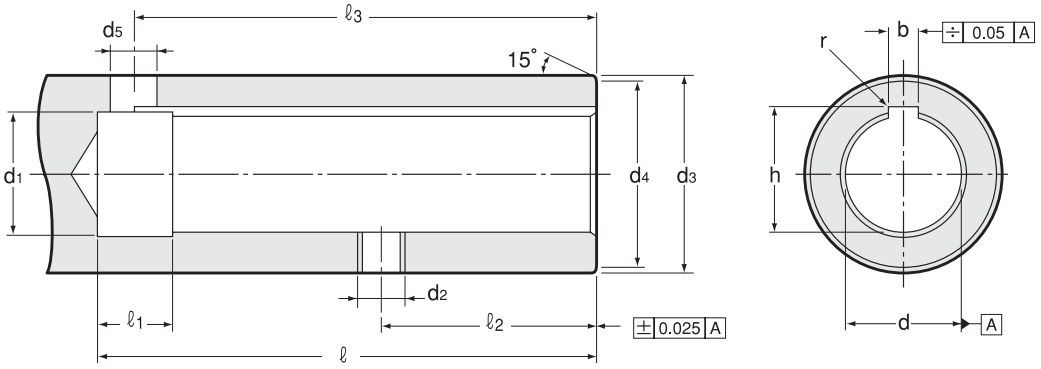

Size	d H6	ℓ (min)	d1	d2	d3 g6	d4	d5	ℓ 1	ℓ 2 ± 0.1	ℓ 3	b +0.120 +0.060	h +0.1 0	r
8	8	42	8.6	M4	15	14.4	3.5	8	16	35	2	9	0.2
10	10	52	10.6	M5	18	17.4	5	8	22	48	3	11	0.2
12	12	52	12.6	M5	20	19.2	5	8	22	48	3	13	0.2
16	16	74	16.6	M6	25	24	6	8	34	70	5	17.3	0.2
20	20	77	20.6	M8	32	31	6	8	34	73	5	21.3	0.2
25	25	85	25.6	M8	37	36	8	10	38	80	6	26.7	0.4
26	26	85	26.6	M8	40	39	6	10	38	80	5	27.7	0.2
28	28	85	28.6	M8	40	39	8	10	38	80	6	29.7	0.4
32	32	106	32.8	M8	45	44	10	10	45	101	8	33.7	0.4
35	35	106	35.8	M8	50	49	8	10	45	101	6	36.7	0.4
36	36	106	36.8	M8	50	49	10	10	45	101	8	37.7	0.4
48	48	129	48.8	M10	67	66	12	12	57	123	10	50.1	0.4

Inch to Metric (mm) → Inch × 25.4
Metric (mm) to Inch → Metric ÷ 25.4 or Metric × 0.03937

Special / Custom Sizes on request

MEMO

EM・A

End Mill Chuck

System Chart

19 series

Shank（ϕ 3 ～ 10）	Nut with ϕ 10.0 collet（EMP-19A）	Straight collet

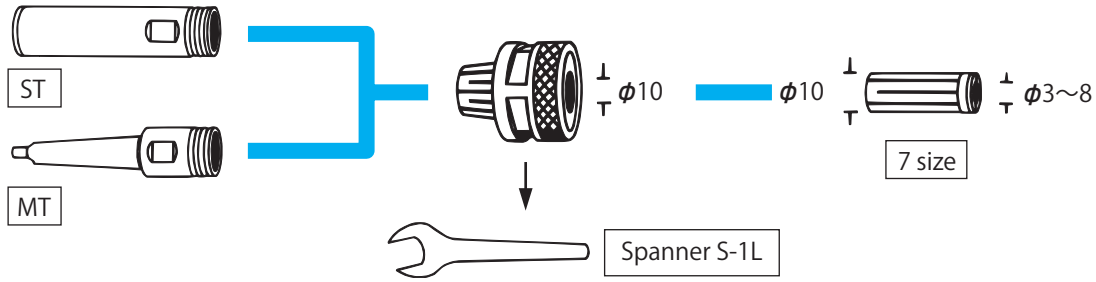

28 series

Shank（ϕ 3 ～ 16）	Nut（EMP-28A）	Taper collet	Straight collet

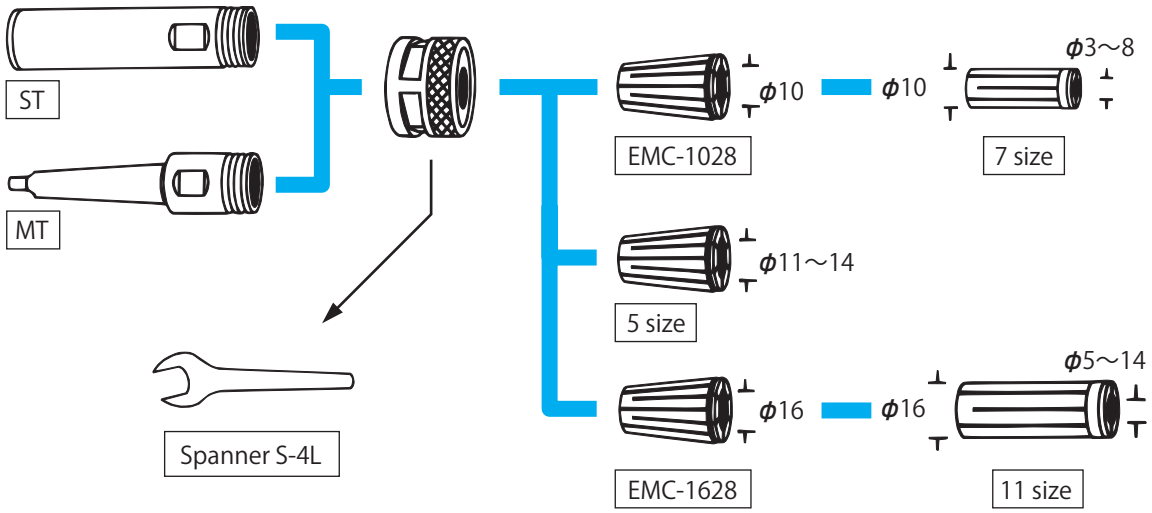

Applications

1.Small diameter end milling
2.Extension for milling chuck

Inch to Metric (mm) → Inch × 25.4
Metric (mm) to Inch → Metric ÷ 25.4 or Metric × 0.03937

Special / Custom Sizes on request

Straight shank

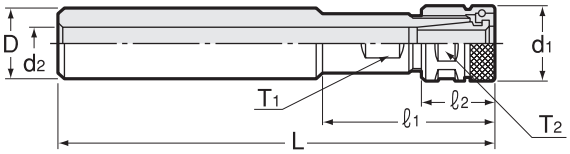

MT shank

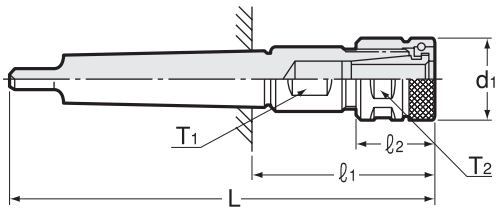

Code	Model	Series	Chucking Range	D h7	MT	d1	d2	L	ℓ 1	ℓ 2	T1	T2	kg	Nut
0041 01101619	EM -1619A	19	3 ~ 10	16	—	26	7.5	100	50	20	17	24	0.17	EMP-19A (with φ10 collet)
0041 01102019	-2019A	19	3 ~ 10	20	—	26	11.5	125	50	20	17	24	0.23	EMP-19A (with φ10 collet)
0041 01102219	-2219A	19	3 ~ 10	22	—	26	11.5	125	50	20	17	24	0.27	EMP-19A (with φ10 collet)
0041 01102519	-2519A	19	3 ~ 10	25	—	26	11.5	150	50	20	17	24	0.41	EMP-19A (with φ10 collet)
0041 01103219	-3219A	19	3 ~ 10	32	—	26	11.5	150	65	20	22	24	0.65	EMP-19A (with φ10 collet)
0041 01104219	-4219A	19	3 ~ 10	42	—	26	11.5	175	80	20	22	24	1.20	EMP-19A (with φ10 collet)
0041 01100119	-T119A	19	3 ~ 10	—	1	26	—	120	58	20	17	24	0.16	EMP-19A (with φ10 collet)
0041 01100219	-T219A	19	3 ~ 10	—	2	26	—	150	75	20	17	24	0.27	EMP-19A (with φ10 collet)
0041 01100319	-T319A	19	3 ~ 10	—	3	26	—	180	86	20	17	24		EMP-19A (with φ10 collet)
0041 01102028	EM -2028A	28	3 ~ 16	20	—	36	11.5	125	60	25	27	33	0.34	EMP-28A
0041 01102228	-2228A	28	3 ~ 16	22	—	36	11.5	125	60	25	27	33		EMP-28A
0041 01102528	-2528A	28	3 ~ 16	25	—	36	17.5	150	60	25	27	33	0.4	EMP-28A
0041 01125428	-25428A	28	3 ~ 16	25.4	—	36	17.5	150	60	25	27	33		EMP-28A
0041 01103028	-3028A	28	3 ~ 16	30	—	36	17.5	150	60	25	27	33	0.55	EMP-28A
0041 01131728	-317528A	28	3 ~ 16	31.75	—	36	17.5	150	60	25	27	33		EMP-28A
0041 01103228	-3228A	28	3 ~ 16	32	—	36	17.5	150	60	25	27	33	0.62	EMP-28A
0041 01103528	-3528A	28	3 ~ 16	35	—	36	17.5	175	60	25	27	33		EMP-28A
0041 01104228	-4228A	28	3 ~ 16	42	—	36	17.5	175	60	25	27	33	1.24	EMP-28A
0041 01100228	-T228A	28	3 ~ 16	—	2	36	—	150	75	25	27	33		EMP-28A
0041 01100328	-T328A	28	3 ~ 16	—	3	36	—	180	86	25	27	33	0.58	EMP-28A
0041 01100428	-T428A	28	3 ~ 16	—	4	36	—	205	87.5	25	27	33		EMP-28A

1.Complete with nut.
2.Collet and spanner are sold separately. (Please refer to the subsequent page.)

Ordering Example

EM - 20 28A
Size Min. boring dia. 28 series

Accessories

Straight collet for 19 series and 28 series EMS

Code	Model	I.D.
0070 01010030	EMS -0310	3.0
0070 01010035	-03510	3.5
0070 01010040	-0410	4.0
0070 01010050	-0510	5.0
0070 01010060	-0610	6.0
0070 01010077	-07710	7.7
0070 01010080	-0810	8.0

Straight collet for 28 series EMS

Code	Model	I.D.
0070 01016050	EMS -0516	5.0
0070 01016060	-0616	6.0
0070 01016077	-07716	7.7
0070 01016080	-0816	8.0
0070 01016090	-0916	9.0
0070 01016100	-1016	10.0
0070 01016110	-1116	11.0
0070 01016120	-1216	12.0
0070 01016125	-12516	12.5
0070 01016130	-1316	13.0
0070 01016140	-1416	14.0

Taper collet

Code	Model	I.D.
0070 01028100	EMC -1028	10.0
0070 01028110	-1128	11.0
0070 01028120	-1228	12.0
0070 01028125	-12528	12.5
0070 01028130	-1328	13.0
0070 01028140	-1428	14.0
0070 01028160	-1628	16.0

Spanner

Code	Model	Nut
0803 00000011	S-1L	EMP-19A
0803 00000014	S-4L	EMP-28A

Set for 19 series

19 Sries	Code	Shank	SET	Nut with collet	Straight collet				
				EMP-19A	EMS-0810	EMS-0610	EMS-0510	EMS-0410	EMS-0310
				ϕ 10	ϕ 8	ϕ 6	ϕ 5	ϕ 4	ϕ 3
STRAIGHT	0040 01016191	EM -1619A	B	Yes	Yes	Yes			
	0040 01016192	-1619A	C	Yes	Yes	Yes	Yes	Yes	Yes
	0040 01020191	-2019A	B	Yes	Yes	Yes			
	0040 01020192	-2019A	C	Yes	Yes	Yes	Yes	Yes	Yes
	0040 01022191	-2219A	B	Yes	Yes	Yes			
	0040 01022192	-2219A	C	Yes	Yes	Yes	Yes	Yes	Yes
	0040 01025191	-2519A	B	Yes	Yes	Yes			
	0040 01025192	-2519A	C	Yes	Yes	Yes	Yes	Yes	Yes
	0040 01032191	-3219A	B	Yes	Yes	Yes			
	0040 01032192	-3219A	C	Yes	Yes	Yes	Yes	Yes	Yes
	0040 01042191	-4219A	B	Yes	Yes	Yes			
	0040 01042192	-4219A	C	Yes	Yes	Yes	Yes	Yes	Yes
MORSETAPER	0040 01001191	EM -T119A	B	Yes	Yes	Yes			
	0040 01001192	-T119A	C	Yes	Yes	Yes	Yes	Yes	Yes
	0040 01002191	-T219A	B	Yes	Yes	Yes			
	0040 01002192	-T219A	C	Yes	Yes	Yes	Yes	Yes	Yes
	0040 01003191	-T319A	B	Yes	Yes	Yes			
	0040 01003192	-T319A	C	Yes	Yes	Yes	Yes	Yes	Yes

Each set completes with a spanner and collets marked "Yes" .

Inch to Metric (mm) → Inch × 25.4
Metric (mm) to Inch → Metric ÷ 25.4 or Metric × 0.03937

Special / Custom Sizes on request

Set for 28 series

28 Sries	Code	Shank	SET	Nut EMP-28A	Taper collet	Straight collet				
					EMC-1628	EMS-1216	EMS-1016	EMS-0816	EMS-0616	EMS-0516
					ϕ 16	ϕ 12	ϕ 10	ϕ 8	ϕ 6	ϕ 5
STRAIGHT	0040 01020281	EM -2028A	B	Yes	Yes	Yes	Yes			
	0040 01020282	-2028A	C	Yes	Yes	Yes	Yes	Yes	Yes	Yes
	0040 01022281	-2228A	B	Yes	Yes	Yes	Yes			
	0040 01022282	-2228A	C	Yes	Yes	Yes	Yes	Yes	Yes	Yes
	0040 01025281	-2528A	B	Yes	Yes	Yes	Yes			
	0040 01025282	-2528A	C	Yes	Yes	Yes	Yes	Yes	Yes	Yes
	0040 01025421	-25428A	B	Yes	Yes	Yes	Yes			
	0040 01025422	-25428A	C	Yes	Yes	Yes	Yes	Yes	Yes	Yes
	0040 01030281	-3028A	B	Yes	Yes	Yes	Yes			
	0040 01030282	-3028A	C	Yes	Yes	Yes	Yes	Yes	Yes	Yes
	0040 01031751	-317528A	B	Yes	Yes	Yes	Yes			
	0040 01031752	-317528A	C	Yes	Yes	Yes	Yes	Yes	Yes	Yes
	0040 01032281	-3228A	B	Yes	Yes	Yes	Yes			
	0040 01032282	-3228A	C	Yes	Yes	Yes	Yes	Yes	Yes	Yes
	0040 01035281	-3528A	B	Yes	Yes	Yes	Yes			
	0040 01035282	-3528A	C	Yes	Yes	Yes	Yes	Yes	Yes	Yes
	0040 01042281	-4228A	B	Yes	Yes	Yes	Yes			
	0040 01042282	-4228A	C	Yes	Yes	Yes	Yes	Yes	Yes	Yes
MORSETAPER	0040 01002281	EM -T228A	B	Yes	Yes	Yes	Yes			
	0040 01002282	-T228A	C	Yes	Yes	Yes	Yes	Yes	Yes	Yes
	0040 01003281	-T328A	B	Yes	Yes	Yes	Yes			
	0040 01003282	-T328A	C	Yes	Yes	Yes	Yes	Yes	Yes	Yes
	0040 01004281	-T428A	B	Yes	Yes	Yes	Yes			
	0040 01004282	-T428A	C	Yes	Yes	Yes	Yes	Yes	Yes	Yes

Each set completes with a spanner and collets marked "Yes" .

Ordering Example

EM - 20 19A - C

Shank size 19 series C set

DC

Straight Drill Chuck

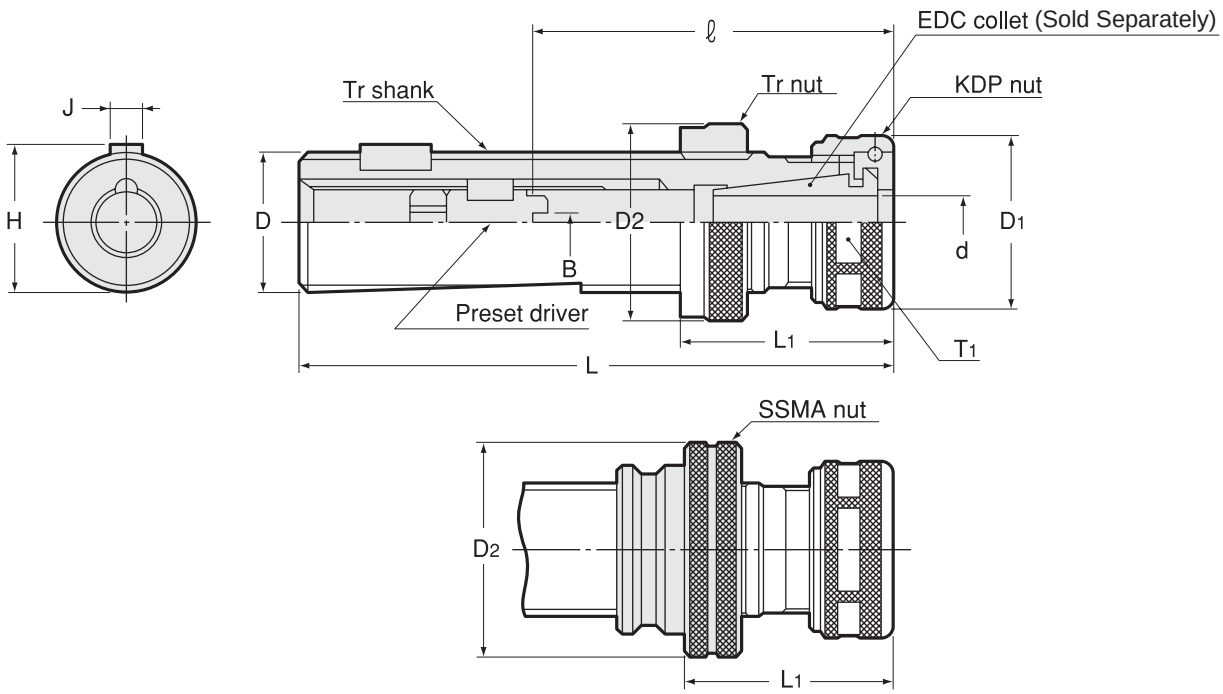

Code	Model	D h6	d Chucking Range	B	ℓ	Preset driver	L	D1	D2	L1	H	J	T1	Nut	kg
0060 3016 ※ 000	**DC-1619 /Tr16**	16	2.8 ~ 9	0	18 ~ 58	DCS -009	103	26	25	35 ~ 50	17.1	5	24	KDP-1916	0.1
0060 4016 ※ 000	**/SSMA16**	16	2.8 ~ 9	4	31 ~ 71	DCS -409	103	26	26	32 ~ 47	17.1	5	24	KDP-1916	0.1
0060 3020 ※ 000	**DC-2019 /Tr20**	20	2.8 ~ 9	0	18 ~ 58	DCS -009	108	26	32	35 ~ 50	21.1	5	24	KDP-1916	0.2
0060 4020 ※ 000	**/SSMA20**	20	2.8 ~ 9	4	31 ~ 71	DCS -409	108	26	33	32 ~ 47	21.1	5	24	KDP-1916	0.2
0060 3025 ※ 000	**DC-2524 /Tr25**	25	2.8 ~ 12	0	23 ~ 63	DCS -012	118	32	37	38 ~ 63	26.5	6	30	KDP-2422	0.3
0060 4025 ※ 000	**/SSMA25**	25	2.8 ~ 12	5	33 ~ 73	DCS -512	118	32	40	36 ~ 61	26.5	6	30	KDP-2422	0.4
0060 3028 ※ 000	**DC-2828 /Tr28**	28	4.0 ~ 16	0	28 ~ 78	DCS -016	122	36	40	40 ~ 68	29.5	6	33	KDP-2825	0.4
				5	43 ~ 93	DCS -516									
0060 4028 ※ 000	**/SSMA28**	28	4.0 ~ 16	6	43 ~ 93	DCS -616	122	36	42	38 ~ 66	29.5	6	33	KDP-2825	0.4
0060 3032 ※ 000	**DC-3228 /Tr32**	32	4.0 ~ 16	0	28 ~ 78	DCS -016	143	36	45	40 ~ 68	33.5	8	33	KDP-2825	0.6
				5	43 ~ 93	DCS -516									
0060 4032 ※ 000	**/SSMA32**	32	4.0 ~ 16	6	43 ~ 93	DCS -616	143	36	47	36 ~ 64	33.5	8	33	KDP-2825	0.7
0060 3036 ※ 000	**DC-3636 /Tr36**	36	4.0 ~ 22	0	29 ~ 89	DCS -022	143	46	50	45 ~ 80	37.5	8	42	KDP-3632	0.8
				5	48 ~ 108	DCS -522									
0060 4036 ※ 000	**/SSMA36**	36	4.0 ~ 22	6	48 ~ 108	DCS -622	143	46	54	41 ~ 76	37.5	8	42	KDP-3632	0.8
				8	48 ~ 108	DCS -822									

1.Complete with nut and preset driver. Collet and spanner are sold separately. (P. 444 - 446)
2.Dimension B will be inserted in " ※ "

Collet
P. 444

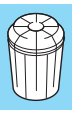

Spanner
P. 446



Accessories

Holder Model	Nut	Collet	Spanner
DC -1619	KDP-1916	EDC-d19	S-1L
DC -2019	KDP-1916	EDC-d19	S-1L
DC -2524	KDP-2422	EDC-d24	S-3L
DC -2828	KDP-2825	EDC-d28	S-4L
DC -3228	KDP-2825	EDC-d28	S-4L
DC -3636	KDP-3632	EDC-d36	S-5L

Ordering Example

DC-2828 / **Tr28** / **016**
Nut — Preset driver

Inch to Metric (mm) → Inch × 25.4
Metric (mm) to Inch → Metric ÷ 25.4 or Metric × 0.03937

Special / Custom Sizes on request

DC・T , DC・N

Straight Drill Chuck

● Use with drilling chuck with SSMA nut enables quick change.

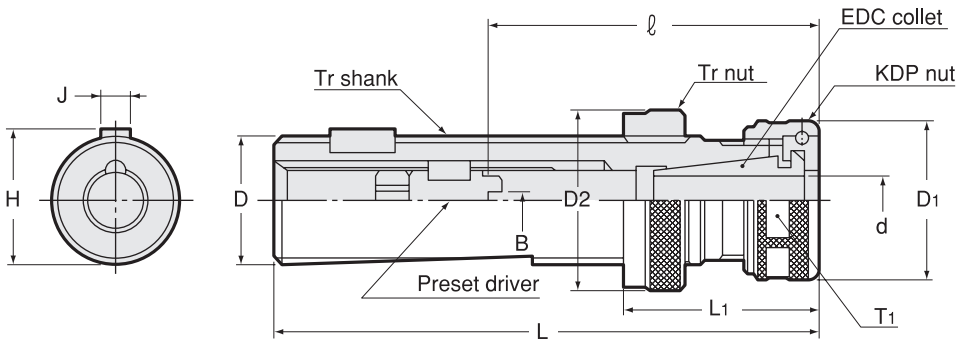



Applications

● For special purpose machine, transfer lines, machining center, NC lathe, automatic lathe, multiple drilling machine etc.

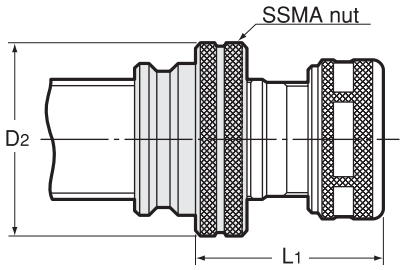

Code	Model	D h6	d Chucking Range	B	ℓ	Preset driver	L	D1	D2	L1	H	J	T1	Nut	kg
0060 3216 ※ 000	**DC-1619N /Tr16N**	16	2.8 ~ 9	0	18 ~ 58	DCS -009	103	26	25	35 ~ 50	17.5	4	24	KDP-1916	
0060 4216 ※ 000	**/SSMA16N (×2)**	16	2.8 ~ 9	4	31 ~ 71	DCS -409	103	26	26	32 ~ 47	17.5	4	24	KDP-1916	
0060 3416 ※ 000	**DC-1619T /Tr16×2**	16	2.8 ~ 9	0	18 ~ 58	DCS -009	103	26	25	35 ~ 50	17.0	3	24	KDP-1916	
0060 4416 ※ 000	**/SSMA16 (×2)**	16	2.8 ~ 9	4	31 ~ 71	DCS -409	103	26	26	32 ~ 47	17.0	3	24	KDP-1916	
0060 3419 ※ 000	**DC-1919T /Tr19**	19	2.8 ~ 9	0	18 ~ 58	DCS -009	103	26	32	35 ~ 50	21.0	5	24	KDP-1916	0.2
0060 4419 ※ 000	**/SSMA19-20**	19	2.8 ~ 9	4	31 ~ 71	DCS -409	103	26	33	32 ~ 47	21.0	5	24	KDP-1916	0.2
0060 3220 ※ 000	**DC-2019N /Tr20N**	20	2.8 ~ 9	0	18 ~ 58	DCS -009	108	26	32	35 ~ 50	22.0	5	24	KDP-1916	0.2
0060 4220 ※ 000	**/SSMA20N**	20	2.8 ~ 9	4	31 ~ 71	DCS -409	108	26	33	32 ~ 47	22.0	5	24	KDP-1916	0.2
0060 3422 ※ 000	**DC-2224T /Tr22**	22	2.8 ~ 12	0	23 ~ 63	DCS -012	118	32	32	38 ~ 63	24.0	5	30	KDP-2422	0.3
0060 4422 ※ 000	**/SSMA22**	22	2.8 ~ 12	5	33 ~ 73	DCS -512	118	32	37	36 ~ 61	24.0	5	30	KDP-2422	0.3
0060 3224 ※ 000	**DC-2424N /Tr24N**	24	2.8 ~ 12	0	23 ~ 63	DCS -012	108	32	37	38 ~ 63	26.0	5	30	KDP-2422	0.3
0060 4224 ※ 000	**/SSMA24-25N**	24	2.8 ~ 12	5	33 ~ 73	DCS -512	108	32	40	36 ~ 61	26.0	5	30	KDP-2422	0.3
0060 3226 ※ 000	**DC-2624N /Tr26N**	26	2.8 ~ 12	0	23 ~ 63	DCS -012	122	32	40	38 ~ 63	28.6	7	30	KDP-2422	0.4
0060 4226 ※ 000	**/SSMA26-28N**	26	2.8 ~ 12	5	33 ~ 73	DCS -512	122	32	42	36 ~ 61	28.6	7	30	KDP-2422	0.4
0060 3426 ※ 000	**DC-2624T /Tr26**	26	2.8 ~ 12	0	23 ~ 63	DCS -012	122	32	40	38 ~ 63	28.0	5	30	KDP-2422	0.4
0060 4426 ※ 000	**/SSMA26-28**	26	2.8 ~ 12	5	33 ~ 73	DCS -512	122	32	42	36 ~ 61	28.0	5	30	KDP-2422	0.4
0060 3230 ※ 000	**DC-3028N /Tr30N**	30	4 ~ 16	0	28 ~ 78	DCS -016	122	36	45	40 ~ 68	32.6	7	33	KDP-2825	0.6
0060 4230 ※ 000	**/SSMA30-36N**	30	4 ~ 16	5	43 ~ 93	DCS -516	122	36	54	36 ~ 64	32.6	7	33	KDP-2825	0.6
				6	43 ~ 93	DCS -616									
0060 3435 ※ 000	**DC-3536T /Tr35**	35	4 ~ 22	0	29 ~ 89	DCS -022	143	46	50	45 ~ 80	38.0	7	42	KDP-3632	0.8
				5	48 ~ 108	DCS -522									
0060 4435 ※ 000	**/SSMA35-36**	35	4 ~ 22	6	48 ~ 108	DCS -622	143	46	54	41 ~ 76	38.0	7	42	KDP-3632	0.8
				8	48 ~ 108	DCS -822									
0060 3236 ※ 000	**DC-3636N /Tr36N**	36	4 ~ 22	0	29 ~ 89	DCS -022	143	46	50	45 ~ 80	39.2	10	42	KDP-3632	0.8
				5	48 ~ 108	DCS -522									
0060 4236 ※ 000	**/SSMA36N**	36	4 ~ 22	6	48 ~ 108	DCS -622	143	46	54	41 ~ 76	39.2	10	42	KDP-3632	0.8
				8	48 ~ 108	DCS -822									

1.Collet and spanner are sold separately. (P. 444 - 446)
2.Dimension B will be inserted in " ※ "

Ordering Example

DC-3536T / **Tr35** / **622**
Nut　Preset driver

Collet
P. 444



Spanner
P. 446



Inch to Metric (mm) → Inch × 25.4
Metric (mm) to Inch → Metric ÷ 25.4 or Metric × 0.03937

Special / Custom Sizes on request

Accessories

Model	Nut（Included）	Collet	Spanner
DC -1619N	KDP-1916	EDC-d19	S-1L
DC -1619T	KDP-1916	EDC-d19	S-1L
DC -1919T	KDP-1916	EDC-d19	S-1L
DC -2019N	KDP-1916	EDC-d19	S-1L
DC -2224T	KDP-2422	EDC-d24	S-3L
DC -2424N	KDP-2422	EDC-d24	S-3L
DC -2624N	KDP-2422	EDC-d24	S-3L
DC -2624T	KDP-2422	EDC-d24	S-3L
DC -3028N	KDP-2825	EDC-d28	S-4L
DC -3536T	KDP-3632	EDC-d36	S-5L
DC -3636N	KDP-3632	EDC-d36	S-5L

Preset driver

Type1 without tang

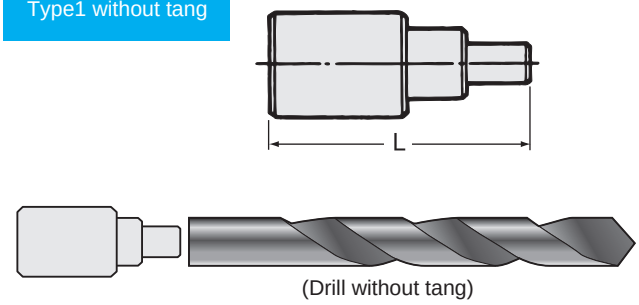

(Drill without tang)

Type2 with tang

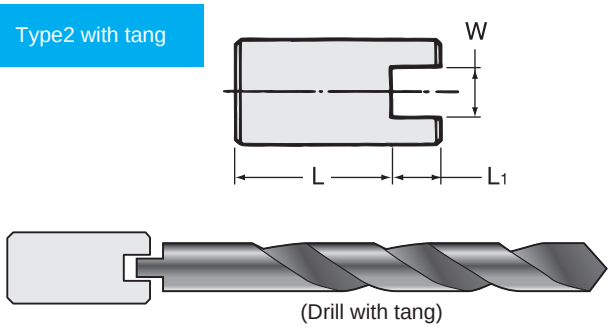

(Drill with tang)

Code	Model	Holder model	Type	W +0.3 +0.2	L	L1
0061 02000009	DCS -009	DC-1619、1619N、1619T、1919T、2019、2019N	1	—	28.3	—
0061 02000409	DCS -409	DC-1619、1619N、1619T、1919T、2019、2019N	2	4	15.3	3.5
0061 02000012	DCS -012	DC-2224T、2424N、2524、2624T、2624N	1	—	29.0	—
0061 02000512	DCS -512	DC-2224T、2424N、2524、2624T、2624N	2	5	19.5	3.5
0061 02000016	DCS -016	DC-2828、3028N、3228	1	—	35.0	—
0061 02000516	DCS -516	DC-2828、3028N、3228	2	5	20.0	4.0
0061 02000616	DCS -616	DC-2828、3028N、3228	2	6	20.0	4.0
0061 02000022	DCS -022	DC-3536T、3636、3636N	1	—	46.5	—
0061 02000522	DCS -522	DC-3536T、3636、3636N	2	5	27.5	4.0
0061 02000622	DCS -622	DC-3536T、3636、3636N	2	6	27.5	4.0
0061 02000822	DCS -822	DC-3536T、3636、3636N	2	8	27.5	4.0

Inch to Metric (mm) → Inch × 25.4
Metric (mm) to Inch → Metric ÷ 25.4 or Metric × 0.03937

Special / Custom Sizes on request

ED • A

Straight Drill Chuck

ST Type1

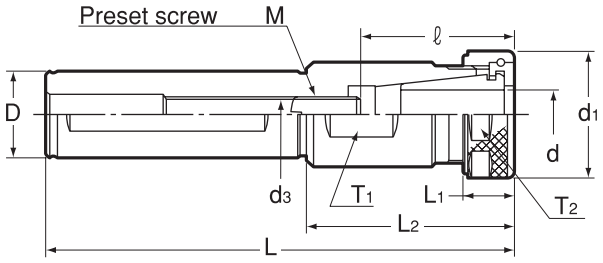

ST Type2

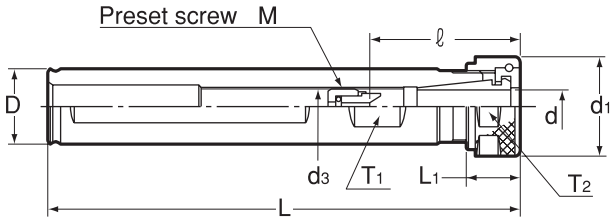

ST Type3

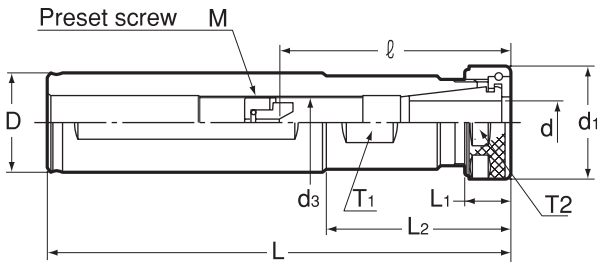

Code	Model	Chucking range (d)	Type	D h6	L	d1	L1	L2	M	d3	ℓ	T1	T2	Nut	kg
0060 52001619	ED -1619A	2.8 ~ 9	1	16	125	26	14	50	M8	6.8	30 ~ 40	17	24	KDP-1916	0.2
0060 52002019	-2019A	2.8 ~ 9	2	20	125	26	14	—	M10	9.3	30 ~ 60	17	24	KDP-1916	
0060 52002219	-2219A	2.8 ~ 9	3	22	125	26	14	50	M10	9.3	30 ~ 60	17	24	KDP-1916	
0060 52002519	-2519A	2.8 ~ 9	3	25	125	26	14	50	M10	9.3	30 ~ 60	17	24	KDP-1916	
0060 52025419	-25419A	2.8 ~ 9	3	25.4	125	26	14	50	M10	9.3	30 ~ 60	17	24	KDP-1916	
0060 52031719	-317519A	2.8 ~ 9	3	31.75	150	26	14	60	M10	9.3	30 ~ 60	17	24	KDP-1916	
0060 52003219	-3219A	2.8 ~ 9	3	32	150	26	14	60	M10	9.3	30 ~ 60	17	24	KDP-1916	
0060 52002028	ED -2028A	4 ~ 16	1	20	135	36	15	60	M10	8.6	43 ~ 55	27	33	KDP-2825	0.4
0060 52002228	-2228A	4 ~ 16	1	22	135	36	15	60	M10	8.6	43 ~ 55	27	33	KDP-2825	0.4
0060 52002528	-2528A	4 ~ 16	1	25	135	36	15	60	M10	8.6	43 ~ 55	27	33	KDP-2825	0.5
0060 52025428	-25428A	4 ~ 16	1	25.4	135	36	15	60	M10	8.6	43 ~ 55	27	33	KDP-2825	0.5
0060 52031728	-317528A	4 ~ 16	3	31.75	150	36	15	60	M17	16.3	43 ~ 75	27	33	KDP-2825	0.6
0060 52003228	-3228A	4 ~ 16	3	32	150	36	15	60	M17	16.3	43 ~ 75	27	33	KDP-2825	0.6
0060 52004028	-4028A	4 ~ 16	3	40	175	36	15	75	M17	16.3	43 ~ 75	27	33	KDP-2825	1.1
0060 52004228	-4228A	4 ~ 16	3	42	175	36	15	75	M17	16.3	43 ~ 75	27	33	KDP-2825	1.1

Collet and spanner are sold separately.

Collet
P. 444



Spanner
P. 446



Accessories

Model	Nut (Included)	Collet	Spanner
ED- ○○19A	KDP-1916	EDC-d19	S-1L
ED- ○○28A	KDP-2825	EDC-d28	S-4L

Ordering Example

ED - 16 19A
D 19Aseries

Inch to Metric (mm) → Inch × 25.4
Metric (mm) to Inch → Metric ÷ 25.4 or Metric × 0.03937

Special / Custom Sizes on request

MT

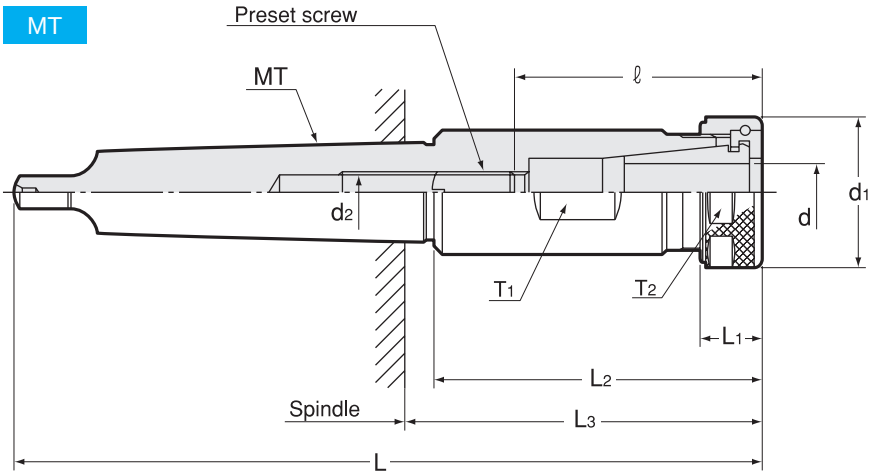

Code	Model	d Chucking range	MT	L	d1	L1	L2	M	L3	d2	ℓ	T1	T2	Nut	kg
0060 52000119	ED -T119A	2.8 ~ 9	1	120	26	14	50	–	58	–	30	17	24	KDP-1916	0.1
0060 52000219	-T219A	2.8 ~ 9	2	150	26	14	65	M10	75	9.3	30 ~ 60	17	24	KDP-1916	0.2
0060 52000319	-T319A	2.8 ~ 9	3	180	26	14	80	M10	86	9.3	30 ~ 60	17	24	KDP-1916	0.3
0060 52000228	-T228A	4 ~ 16	2	150	36	15	65	M8	75	6.8	43 ~ 55	27	33	KDP-2825	0.4
0060 52000328	-T328A	4 ~ 16	3	180	36	15	80	M10	86	8.6	43 ~ 55	27	33	KDP-2825	0.6
0060 52000428	-T428A	4 ~ 16	4	205	36	15	80	M17	88	16.3	43 ~ 75	27	33	KDP-2825	0.8

Collet and spanner are sold separately. (P. 444 - 446)

Collet
P. 444



Spanner
P. 446



Accessories			
Model	Nut (Included)	Collet	Spanner
ED- ○○19A	KDP-1916	EDC-d19	S-1L
ED- ○○28A	KDP-2825	EDC-d28	S-4L

Ordering Example

ED - T1 19A

Shank size: T1
19Aseries: 19A

Inch to Metric (mm) → Inch × 25.4
Metric (mm) to Inch → Metric ÷ 25.4 or Metric × 0.03937

Special / Custom Sizes on request

ED For Small Diameters

Straight Drill Chuck For Small Diameters

Tr Type1

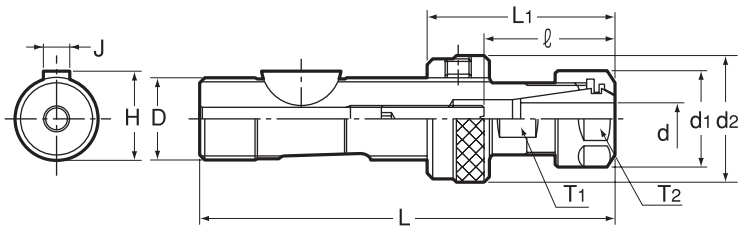

ST Type2

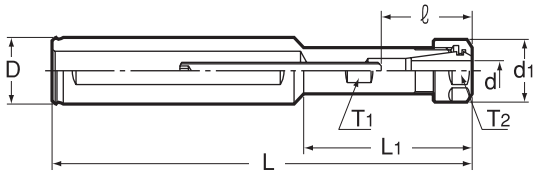

MT Type3

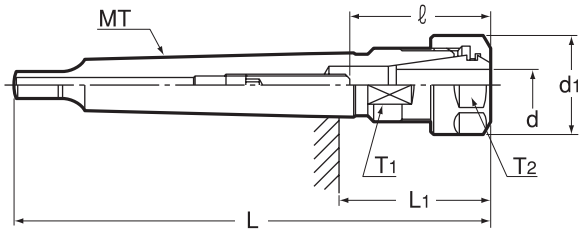

Code	Model	d Chucking range	Type	D h6	MT	L	d1	d2	ℓ	L1	H 0 -0.2	J h9	T1	T2	Nut	kg	Collet
0060 50011007	ED -Tr1007/Tr10	0.5 ~ 7	1	10	—	72	19	18	18 ~ 31 (21)	32 ~ 42	10.9	3	12	17	KDP-1414	0.1	FDC-07
0060 50011207	-Tr1207/Tr12	0.5 ~ 7	1	12	—	72	19	20	18 ~ 31	32 ~ 42	12.9	3	12	17	KDP-1414	0.1	
0060 50011607	-Tr1607/Tr16	0.5 ~ 7	1	16	—	80	19	25	18 ~ 31	35 ~ 45	17.1	5	12	17	KDP-1414	0.1	
0060 50001607	ED -1607	0.5 ~ 7	2	16	—	125	19	—	18 ~ 31	50	—	—	12	17	KDP-1414	0.1	FDC-07
0060 50002007	-2007	0.5 ~ 7	2	20	—	125	19	—	18 ~ 31	50	—	—	12	17	KDP-1414	0.2	
0060 50000007	ED -T007	0.5 ~ 7	3	—	0	85.5	19	—	18 ~ 31 (21)	29	—	—	12	17	KDP-1414		FDC-07
0060 50000107	-T107	0.5 ~ 7	3	—	1	91.5	19	—	18 ~ 31	29	—	—	12	17	KDP-1414		

1.Collet are sold separately. (P. 444)
2. ℓ dimension in bracket is vaild only when the tool shank is φ5.1mm or bigger.

Collet
P. 444



Accessories			
Holder Model	Nut (Included)	Collet	Spanner
All Model	KDP-1414	FDC-07	Width 17mm

Ordering Example

ED - 16 07
D 07series

Inch to Metric (mm) → Inch × 25.4
Metric (mm) to Inch → Metric ÷ 25.4 or Metric × 0.03937

Special / Custom Sizes on request

Spindle Dimensions for ED-07 series

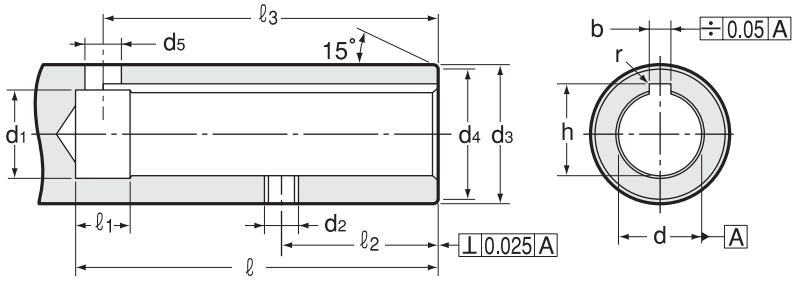

寸法 Size	d H6	ℓ (min)	d1	d2	d3 g6	d4	d5	ℓ 1	ℓ 2 ± 0.1	ℓ 3	b		h +0.1 0
10	10	41	10.6	M5	18	17.4	5	8	14	37	3	+0.012 +0.06	11
12	12	41	12.6	M5	20	19.2	5	8	14	37	3	+0.012 +0.06	13
16	16	46	16.6	M6	25	24	6	8	16	42	5	+0.145 +0.07	17.3

Special spindle dimension shown above is different from DIN standard.

Inch to Metric (mm) → Inch × 25.4
Metric (mm) to Inch → Metric ÷ 25.4 or Metric × 0.03937

Special / Custom Sizes on request

MEMO

Floating Holder

Applications

High precision reaming with special purpose machines and transfer lines.

Feature

1. Top quality floating mechanism

Radial float and angular float mechanisms compensate for misalignment between reamer and pre-drilled hole.

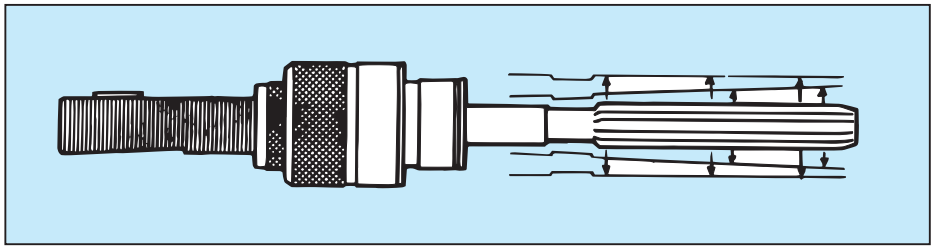

Radial & parallel float

+

Angular float

2. Use for both horizontal and vertical spindles

Built-in locking function prevents reamer from sagging on horizontal spindles.

3. No rust

No loss of precision due to rust by special surface treatment.

Inch to Metric (mm) → Inch × 25.4
Metric (mm) to Inch → Metric ÷ 25.4 or Metric × 0.03937

Special / Custom Sizes on request

FH-Tr

Floating Holder

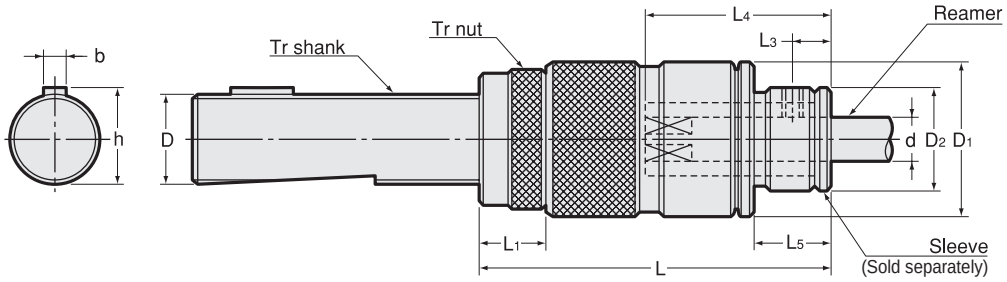



Code	Model	d Reamer shank	Sleeve size	Float		D	b	h	D1	L	L1	L3	L5	D2	kg
				Radial	Angular										
0180 00003000	**FH0 -Tr16**	3.00 ~ 8.00	FHS0	0.4	1°	16	5	17.2	28	62~80	12	7	15	19.5	0.3
0180 00003001	**-Tr16T**	3.00 ~ 8.00	FHS0	0.4	1°	16	3	17.3	28	62~80	12	7	15	19.5	
0180 00003002	**-Tr16N**	3.00 ~ 8.00	FHS0	0.4	1°	16	4	17.5	28	62~80	12	7	15	19.5	0.3
0180 00003003	**-Tr19**	3.00 ~ 8.00	FHS0	0.4	1°	19	5	21.1	28	62~80	12	7	15	19.5	0.4
0180 00003004	**-Tr20**	3.00 ~ 8.00	FHS0	0.4	1°	20	5	21.2	28	62~75	12	7	15	19.5	0.4
0180 00003100	**FH1 -Tr16**	4.00 ~ 10.00	FHS1	0~0.4 Adjustable	0~1°	16	5	17.2	36	69~87	12	8	19	23	0.4
0180 00003101	**-Tr16T**	4.00 ~ 10.00	FHS1	0~0.4 Adjustable	0~1°	16	3	17.3	36	69~87	12	8	19	23	
0180 00003102	**-Tr16N**	4.00 ~ 10.00	FHS1	0~0.4 Adjustable	0~1°	16	4	17.5	36	69~87	12	8	19	23	0.4
0180 00003103	**-Tr19**	4.00 ~ 10.00	FHS1	0~0.4 Adjustable	0~1°	19	5	21.1	36	66~84	12	8	19	23	0.5
0180 00003104	**-Tr20**	4.00 ~ 10.00	FHS1	0~0.4 Adjustable	0~1°	20	5	21.2	36	66~79	12	8	19	23	0.5
0180 00003105	**-Tr22**	4.00 ~ 10.00	FHS1	0~0.4 Adjustable	0~1°	22	5	24.1	36	66~84	12	8	19	23	0.5
0180 00003106	**-Tr24**	4.00 ~ 10.00	FHS1	0~0.4 Adjustable	0~1°	24	5	26.1	36	66~94	12	8	19	23	0.6
0180 00003107	**-Tr25**	4.00 ~ 10.00	FHS1	0~0.4 Adjustable	0~1°	25	6	26.5	36	66~84	12	8	19	23	0.6
0180 00003208	**FH2 -Tr26T**	8.10 ~ 20.00	FHS2	0~0.6 Adjustable	0~1°	26	5	28.1	55	87~110	12	14	25	38	1.2
0180 00003209	**-Tr26N**	8.10 ~ 20.00	FHS2	0~0.6 Adjustable	0~1°	26	7	28.6	55	87~110	12	14	25	38	1.2
0180 00003210	**-Tr28**	8.10 ~ 20.00	FHS2	0~0.6 Adjustable	0~1°	28	6	29.5	55	87~118	12	14	25	38	1.2
0180 00003211	**-Tr30**	8.10 ~ 20.00	FHS2	0~0.6 Adjustable	0~1°	30	7	33.1	55	89~118	14	14	25	38	1.3
0180 00003212	**-Tr32**	8.10 ~ 20.00	FHS2	0~0.6 Adjustable	0~1°	32	8	33.5	55	89~115	14	14	25	38	1.5
0180 00003213	**-Tr35**	8.10 ~ 20.00	FHS2	0~0.6 Adjustable	0~1°	35	7	38.1	55	89~125	14	14	25	38	1.6
0180 00003214	**-Tr36**	8.10 ~ 20.00	FHS2	0~0.6 Adjustable	0~1°	36	8	37.5	55	89~127	14	14	25	38	1.7
0180 00003215	**-Tr36N**	8.10 ~ 20.00	FHS2	0~0.6 Adjustable	0~1°	36	10	39.6	55	89~127	14	14	25	38	

L4 Dimension

Model	d Reamer shank	L4
FH0 FH1	3.00 ~ 3.79	23
	3.80 ~ 4.79	26
	4.80 ~ 5.49	30
	5.50 ~ 10.00	35
FH2	8.10 ~ 10.79	42
	10.80 ~ 12.09	50
	12.10 ~ 20.00	55

1. Sleeve is sold separately.
2. To adjust the floating amount, please use the adjustable pin wrench GWA.
3. Please refer to P. 465 for GWA.

Model	Wrench
FH1	GWA1
FH2	

Sleeve

P. 494

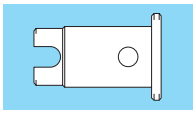

Ordering Example

FH0 - Tr20

Shank size

Inch to Metric (mm) → Inch × 25.4
Metric (mm) to Inch → Metric ÷ 25.4 or Metric × 0.03937

Special / Custom Sizes on request

FH-MT

Floating Holder

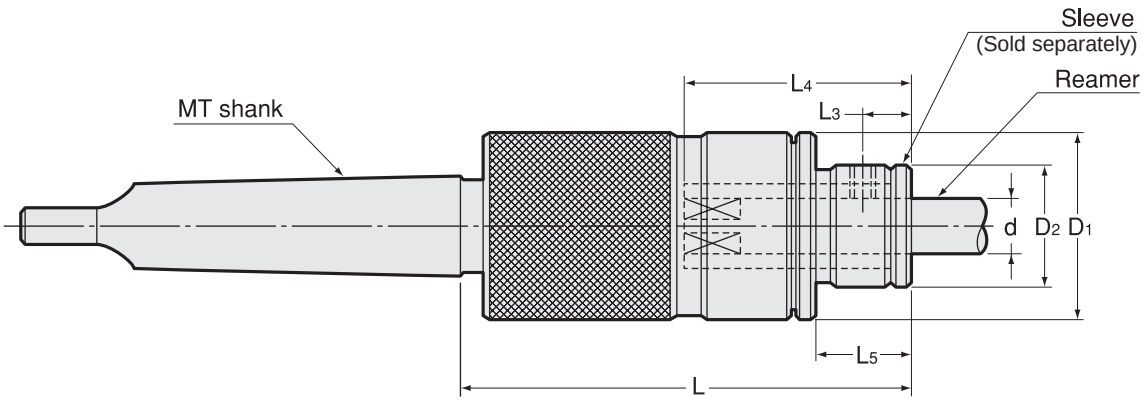

Code	Model	d Reamer shank	Sleeve size	Float		D1	L	L3	L5	D2	kg
				Radial	Angular						
0180 00002001	**FH0 -MT1**	3.00 ~ 8.00	FHS0	0.4	1°	28	65	7	15	19.5	0.3
0180 00002002	**-MT2**	3.00 ~ 8.00	FHS0	0.4	1°	28	65	7	15	19.5	0.4
0180 00002101	**FH1 -MT1**	4.00 ~ 10.00	FHS1	0 ~ 0.4 Adjustable	0 ~ 1°	36	70	8	19	23	0.4
0180 00002102	**-MT2**	4.00 ~ 10.00	FHS1	0 ~ 0.4 Adjustable	0 ~ 1°	36	70	8	19	23	0.5
0180 00002202	**FH2 -MT2**	8.10 ~ 20.00	FHS2	0 ~ 0.6 Adjustable	0 ~ 1°	55	95	14	25	38	1.2
0180 00002203	**-MT3**	8.10 ~ 20.00	FHS2	0 ~ 0.6 Adjustable	0 ~ 1°	55	95	14	25	38	1.3

L4 Dimension		
Model	d Reamer shank	L4
FH0 FH1	3.00 ~ 3.79	23
FH0 FH1	3.80 ~ 4.79	26
FH0 FH1	4.80 ~ 5.49	30
FH0 FH1	5.50 ~ 10.00	35
FH2	8.10 ~ 10.79	42
FH2	10.80 ~ 12.09	50
FH2	12.10 ~ 20.00	55

1. Sleeve is sold separately.
2. To adjust the floating amount, please use the adjustable pin wrench GWA.
   Please refer to P. 465 for GWA.

Sleeve

P. 494

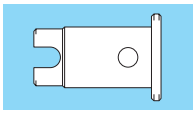

Model	Wrench
FH1	GWA1
FH2	

Ordering Example

FH0 - MT1

Shank size

Inch to Metric (mm) → Inch × 25.4
Metric (mm) to Inch → Metric ÷ 25.4 or Metric × 0.03937

Special / Custom Sizes on request

FH-ST

Floating Holder

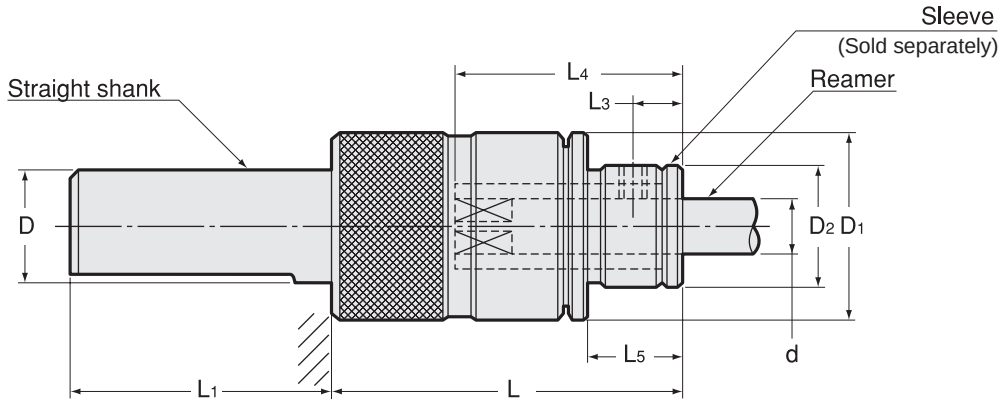

Code	Model	d Reamer shank	Sleeve size	Float Radial	Float Angular	D	D1	L	L1	L3	L5	D2	kg
0180 00001000	FH0 -ST15.875	3.00 ~ 8.00	FHS0	0.4	1°	15.875	28	50	50	7	15	19.5	0.2
0180 00001001	-ST16	3.00 ~ 8.00	FHS0	0.4	1°	16	28	50	50	7	15	19.5	0.2
0180 00001002	-ST19.05	3.00 ~ 8.00	FHS0	0.4	1°	19.05	28	50	50	7	15	19.5	0.2
0180 00001003	-ST20	3.00 ~ 8.00	FHS0	0.4	1°	20	28	50	50	7	15	19.5	0.3
0180 00001100	FH1 -ST15.875	4.00 ~ 10.00	FHS1	0 ~ 0.4 Adjustable	0 ~ 1° Adjustable	15.875	36	54	50	8	19	23	0.3
0180 00001101	-ST16	4.00 ~ 10.00	FHS1	0 ~ 0.4 Adjustable	0 ~ 1° Adjustable	16	36	54	50	8	19	23	0.3
0180 00001102	-ST19.05	4.00 ~ 10.00	FHS1	0 ~ 0.4 Adjustable	0 ~ 1° Adjustable	19.05	36	54	50	8	19	23	0.4
0180 00001103	-ST20	4.00 ~ 10.00	FHS1	0 ~ 0.4 Adjustable	0 ~ 1° Adjustable	20	36	54	50	8	19	23	0.4
0180 00001104	-ST25	4.00 ~ 10.00	FHS1	0 ~ 0.4 Adjustable	0 ~ 1° Adjustable	25	36	54	50	8	19	23	0.4
0180 00001105	-ST25.4	4.00 ~ 10.00	FHS1	0 ~ 0.4 Adjustable	0 ~ 1° Adjustable	25.4	36	54	50	8	19	23	0.4
0180 00001204	FH2 -ST25	8.10 ~ 20.00	FHS2	0 ~ 0.6 Adjustable	0 ~ 1° Adjustable	25	55	75	50	14	25	38	0.9
0180 00001205	-ST25.4	8.10 ~ 20.00	FHS2	0 ~ 0.6 Adjustable	0 ~ 1° Adjustable	25.4	55	75	50	14	25	38	0.9
0180 00001206	-ST32	8.10 ~ 20.00	FHS2	0 ~ 0.6 Adjustable	0 ~ 1° Adjustable	32	55	75	70	14	25	38	1.1
0180 00001207	-ST35	8.10 ~ 20.00	FHS2	0 ~ 0.6 Adjustable	0 ~ 1° Adjustable	35	55	75	70	14	25	38	1.2
0180 00001208	-ST38.1	8.10 ~ 20.00	FHS2	0 ~ 0.6 Adjustable	0 ~ 1° Adjustable	38.1	55	75	70	14	25	38	1.3
0180 00001209	-ST40	8.10 ~ 20.00	FHS2	0 ~ 0.6 Adjustable	0 ~ 1° Adjustable	40	55	75	70	14	25	38	1.4

L4 Dimension

Model	d Reamer shank	L4
FH0 FH1	3.00 ~ 3.79	23
FH0 FH1	3.80 ~ 4.79	26
FH0 FH1	4.80 ~ 5.49	30
FH0 FH1	5.50 ~ 10.00	35
FH2	8.10 ~ 10.79	42
FH2	10.80 ~ 12.09	50
FH2	12.10 ~ 20.00	55

1. Sleeve is sold separately.
2. To adjust the floating amount, please use the adjustable pin wrench GWA.
   Please refer to P. 465 for GWA.

Model	Wrench
FH1	GWA1
FH2	

Sleeve

P. 494

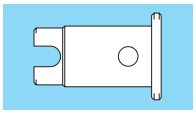

Ordering Example

FH0 - ST16

Shank size

Inch to Metric (mm) → Inch × 25.4
Metric (mm) to Inch → Metric ÷ 25.4 or Metric × 0.03937

Special / Custom Sizes on request

Floating Holder Sleeve

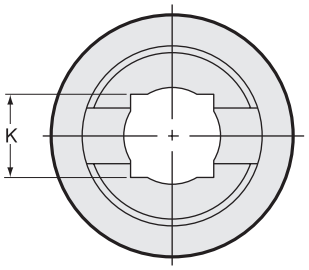

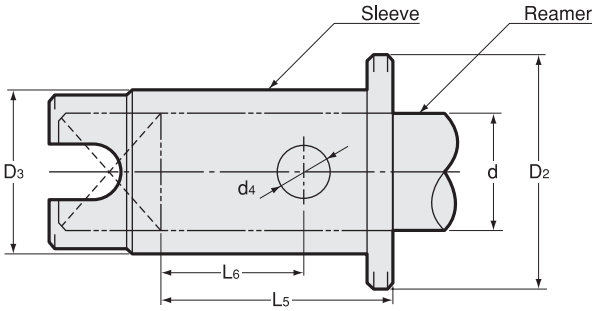

Code	Model	d Reamer shank		K C11	Holder	L5	L6	D2	D3	d4	kg
		More than	Less than								
0185 0000 ※※※※	**FHS0-ϕd**	2.99	3.35	2.5	FH0-○○	18	11	19.5	11	5	0.03
		3.35	3.78	2.8	FH0-○○	17	10	19.5	11	5	0.03
		3.78	4.30	3.2	FH0-○○	20	13	19.5	11	5	0.03
		4.30	4.70	3.5	FH0-○○	20	13	19.5	11	5	0.02
		4.70	5.40	4.0	FH0-○○	23	16	19.5	11	5	0.02
		5.40	6.00	4.5	FH0-○○	28	21	19.5	11	5	0.02
		6.00	6.70	5.0	FH0-○○	27	20	19.5	11	5	0.02
		6.70	7.30	5.5	FH0-○○	27	20	19.5	11	5	0.02
		7.30	8.00	6.0	FH0-○○	26	19	19.5	11	5	0.02
0185 0001 ※※※※	**FHS1-ϕd**	3.99	4.30	3.2	FH1-○○	20	12	23	13	6	0.04
		4.30	4.70	3.5	FH1-○○	20	12	23	13	6	0.04
		4.70	5.40	4.0	FH1-○○	23	15	23	13	6	0.03
		5.40	6.00	4.5	FH1-○○	28	20	23	13	6	0.03
		6.00	6.70	5.0	FH1-○○	27	19	23	13	6	0.03
		6.70	7.30	5.5	FH1-○○	27	19	23	13	6	0.03
		7.30	8.00	6.0	FH1-○○	26	18	23	13	6	0.03
		8.00	8.60	6.5	FH1-○○	26	18	23	13	6	0.03
		8.60	9.50	7.0	FH1-○○	25	17	23	13	6	0.02
		9.50	10.00	8.0	FH1-○○	24	16	23	13	6	0.02
0185 0002 ※※※※	**FHS2-ϕd**	8.09	8.60	6.5	FH2-○○	33	19	38	26	7	0.20
		8.60	9.50	7.0	FH2-○○	32	18	38	26	7	0.20
		9.50	10.70	8.0	FH2-○○	31	17	38	26	7	0.19
		10.70	12.00	9.0	FH2-○○	38	24	38	26	7	0.19
		12.00	13.50	10.0	FH2-○○	42	28	38	26	7	0.17
		13.50	14.70	11.0	FH2-○○	41	27	38	26	7	0.16
		14.70	16.00	12.0	FH2-○○	40	26	38	26	7	0.15
		16.00	17.20	13.0	FH2-○○	39	25	38	26	7	0.14
		17.20	18.70	14.0	FH2-○○	38	24	38	26	7	0.12
		18.70	20.00	15.0	FH2-○○	37	23	38	26	7	0.11

Available in increments of 0.01 mm according to size of reamer shank.

Ordering Example

FHS1 - 6.0

Reamer shank dia.

Inch to Metric (mm) → Inch × 25.4
Metric (mm) to Inch → Metric ÷ 25.4 or Metric × 0.03937

Special / Custom Sizes on request

FH-ST-HDC-A New

Collet Type Floating Holder

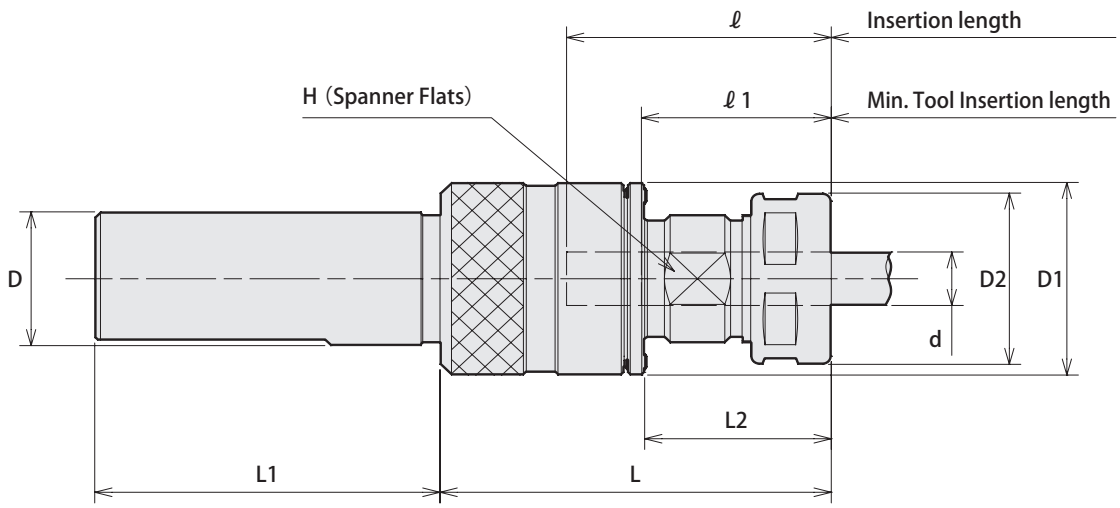

Code	Model	d	Float		D	D1	L	L1	ℓ	ℓ1	L2	D2	H	kg	Collet	Spanner	Adjustable pin wrench
			Radial	Angular													
0180 10001407	FH0 -ST25 -HDC07A	0.5 ~ 7.0	0.4	1°	25	28	62	60	35	22	27	23	17	0.1	FDC-07	S-0	—
0180 10011412	FH1 -ST25 -HDC12A	2.5 ~ 12.0	0 ~ 0.4 Adjustable	0 ~ 1°	25	36	68	60	46	33	32	32	22	0.2	FDC-12	S-3L	GWA1
0180 10021422	FH2 -ST25 -HDC22A	3.5 ~ 22.0	0 ~ 0.6 Adjustable	0 ~ 1°	25	55	95	60	68	47	44	46	35	0.5	FDC-22	S-5L	

1. For center through coolant feed, please contact NT TOOL beforehand for cutting conditions.
2. Collet and spanner are sold separately.
3. See P.499 for standard tightening torque.
4. For FH0, floating amount and angle are fixed.
5. To adjust floating amount, please use adjustable pin wrench GWA. (P.465)

Adjustable pin wrench P. 465

Collet P. 086 - 089

Spanner P. 095

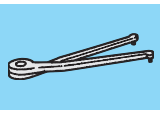





Ordering Example

FH0 - ST25 - HDC 07 A

Shank size — Max. collet I.D.

MEMO

RELATED EQUIPMENT SERIES

BT / QL-MH

Hex. Bit Socket / Torque Wrench

Hex. Bit Socket

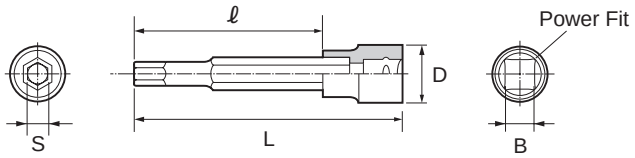

Code	Model	S	D	L	ℓ	B	Chuck model	Chuck size mm	Chuck size inch	Tightening torque (Nm)	Torque wrench
8912 00353000	**BT2-04**	4	16	54.5	32	6.3sq.	PHC·A	06-08	0250-0312	11 ~ 12	QL15N-ML
							PHC·A	09-20	0375-0750	7 ~ 8	
							PHC·S	06-12, 16	0250-0500	9 ~ 10	
							PHZ·S	06-12	—		
8912 00354000	**BT3-06**	6	17	66	37	9.5sq.	PHC·A	25, 32	1000, 1250	29 ~ 30	QL50N-ML
							PHC·S	20-25	—	23 ~ 24	

Torque wrench

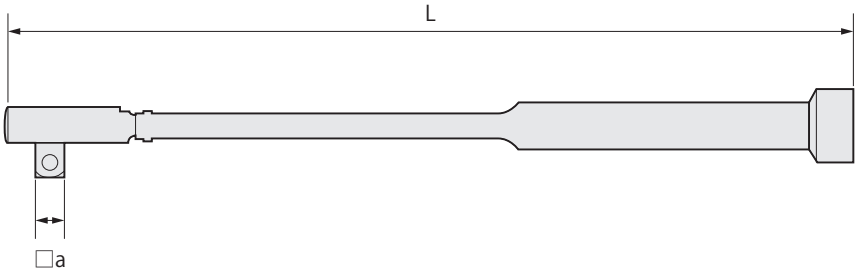

Code	Model	Torque range	□ a	L	Hex. Bit Socket
8912 00351000	**QL15N-ML**	3~15Nm	6.3	195	BT2-04
8912 00352000	**QL50N-ML**	10~50Nm	9.5	260	BT3-06

Inch to Metric (mm) → Inch × 25.4
Metric (mm) to Inch → Metric ÷ 25.4 or Metric × 0.03937

Special / Custom Sizes on request

SH / CL

Spanner Head / Torque Wrench

Spanner head

Type1

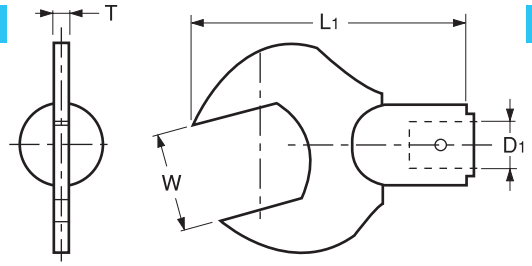

Type2

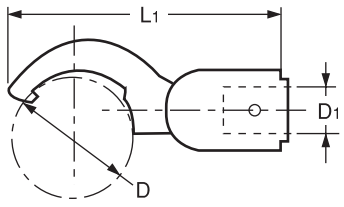

HDC·A, SDM, GDC·A, HDZ, GDZ

Code	Model	Type	W	T $^{+0.4}_{-0.2}$	D	D1	L1	Nut	Spanner	Tightening torque (Nm)	Torque wrench
3150 00000115	**SH -1A-15**	1	24	4.5	–	15	78	HDP-09,KDP-1916	S-1L	30 ~ 35	CL50N × 15D
3150 00000315	**SH -3A-15**	1	30	4.5	–	15	83	HDP-12,KDP-2422	S-3L	35 ~ 40	CL100N × 15D
3150 00000415	**SH -4A-15**	1	33	4.5	–	15	84	HDP-16,KDP-2825	S-4L	40 ~ 45	CL100N × 15D
3150 00000515	**SH -5A-15**	1	42	5.5	–	15	89	HDP-22,KDP-3632	S-5L	55 ~ 60	CL100N × 15D
3150 00002310	**SH -23-10**	2	–	–	23	10	60	HDP-07A	S-0	10 ~ 15	CL25N × 10D
3150 00002515	**SH -25-15**	2	–	–	29	15	77	GDP-09	FK-0025	30 ~ 35	CL50N × 15D
3150 00003415	**SH -34-15**	2	–	–	38	15	82	GDP-12	FK-0034	35 ~ 40	CL100N × 15D
								GDP-16	FK-0034	40 ~ 45	
3150 00004515	**SH -45-15**	2	–	–	49	15	86	GDP-22	FK-0045	55 ~ 60	CL100N × 15D
3150 00000619	**SH -6A-19**	2	–	–	66	19	118	HDP-32	S-6	80 ~ 90	CL200N × 19D

ERC, ERC-T, ERZ

Code	Model	Type	W	D	D1	L1	Nut	Spanner	Tightening torque (Nm)	Torque wrench
–	– *	1	11	–	–	–	ERP-8	S-8E	5 ~ 7	–
–	– *	1	14	–	–	–	ERP-11S	S-11E	15 ~ 20	–
3150 00002310	**SH -23-10**	2	–	23	10	60	ERP-11	S-0	10 ~ 15	CL25N × 10D
3150 00003415	**SH -34-15**	2	–	32	15	82	ERP-16	FK-0034	35 ~ 40	CL100N × 15D
				35			ERP-20		40 ~ 45	
–	– *	2	–	42	–	–	ERP-25	HS-1-16	55 ~ 66	–
–	– *	2	–	50	–	–	ERP-32	HS-2-20	65~ 70	–
–	– *	2	–	63	–	–	ERP-40	HS2.5-25	75 ~ 80	–
–	– *	2	–	78	–	–	ERP-50	HS4-42	130 ~ 140	–

* Please contact NT USA for spanner head other than listed above.

Torque wrench

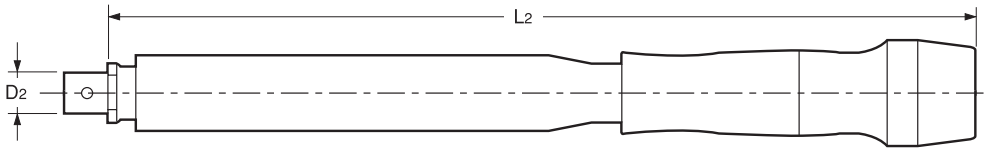

Code	Model	Torque range	D2	L2	Spanner head
3154 00010000	**CL 25N × 10D**	5 ~ 25Nm	10	189	SH-23-10
3154 00020000	**CL 50N × 15D**	10 ~ 50Nm	15	219	SH-1A-15, SH-25-15
3154 00030000	**CL 100N × 15D**	20 ~ 100Nm	15	294	SH-3A-15, SH-4A-15, SH-5A-15, SH-30-15, SH-34-15, SH-45-15
3154 00040000	**CL 200N × 19D**	40 ~ 200Nm	19	435	SH-6A-19

Please use spanner head with correct torque in accordance with manual.

Inch to Metric (mm) → Inch × 25.4
Metric (mm) to Inch → Metric ÷ 25.4 or Metric × 0.03937

Special / Custom Sizes on request

ISG3400 New

Magnetic Induction Heating Device

Heating Device

- Quick cutting tool change by induction heating.
- Both carbide and high-speed steel cutting tools can be used.

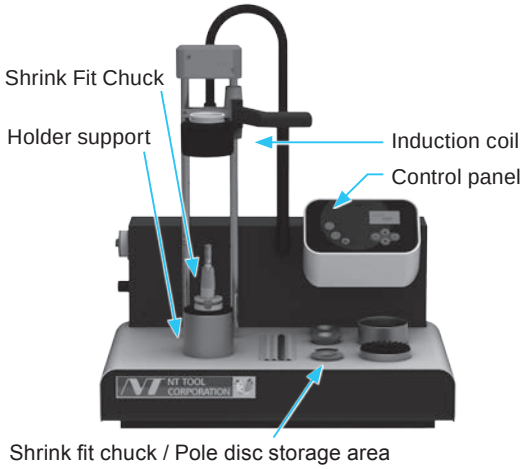

SAP No.		5046884	
Model		ISG3400 TLK-WS	
Coil		Quick Change	
Chucking Range	SC	ø3mm ~ ø32mm ø1/8" ~ ø1-1/4"	Up to ø50 by replacing the coil.
	HSS	ø6mm ~ ø32mm ø1/4" ~ ø1-1/4"	
Heating Method		Induction Heating	
Heating Range (Height)		350mm 13.77"	
Output		11kw	
Power Supply		3×480V-16A	
Dimensions D x W x H		780mm x 535mm x 950mm 31" x 22" x 38"	
Weight		45kg 100 lbs	

Included Accessories

Induction coil



SAP No.	Model	Specifications
6726141	**ISGS3200-1**	1. For the chucks whose O.D. is 53.0mm and less. (SRD32 can be heated. SRK32 cannot be heated.) Special induction coil is needed for SRK32A and SRE [L1 ≦ 60mm (2.362")] . Please contact NT TOOL for details. 2. By exchangeing a changing disk, it can be used in the edged tool size of ø 3 ~ 32mm.

Pole Disc One-Piece



SAP No.	Model	Size (Tool shank diamater)	
6726157	**ISGS3201-0**	ø 3 ~ 5.9mm	For optimal shielding of the magnetic field between coil and tool shank.
6726143	**ISGS3201-1**	ø 6 ~ 12mm	
6726144	**ISGS3201-2**	ø 12.1 ~ 22mm	
6726145	**ISGS3201-3**	ø 22.1 ~ 32mm	

Clamping Ring



SAP No.	Model	
6950431	**ISGS309**	For secure holding of the pole disc inside the coil.

Protective Gloves



SAP No.	Model	
6947666	**VA662-10**	For protection against possible burns and cutting injuries.

Inch to Metric (mm) → Inch × 25.4
Metric (mm) to Inch → Metric ÷ 25.4 or Metric × 0.03937

Heating Device Options (sold separately)

Induction coil

Special induction coil is needed for SRK32A and SRE [L1 ≦ 60mm (2.362")] . Please contact NT TOOL for details.

Pole Disc Two-Piece



SAP No.	Model	Size (Tool shank diamater)	
9074540	**ISGS3201GT-0**	ø 3 ~ 5.9mm	For use when the cutting diameter is bigger than the shrinking diameter.
9074541	**ISGS3201GT-1**	ø 6 ~ 12mm	
9074542	**ISGS3201GT-2**	ø 12.1 ~ 20mm	
9074543	**ISGS3201GT-3**	ø 20.1 ~ 32mm	

Holder support Air Cooled



SAP No.	Model, shank size
6725939	T3-W/HSK32
6725940	T3-W/HSK40
6725941	T3-W/HSK50 (Capable for UTS5040 use.)
6725942	T3-W/HSK63 (Capable for UTS6350 use.)
6725943	T3-W/HSK80 (Capable for UTS10080 use.)
6725938	T3-W/HSK100
6725958	T3-W/SK30, CAT, BT
6725944	T3-W/SK40, CAT, BT
6725945	T3-W/SK50, CAT, BT
6725933	T3-W/25, ABS25
6725934	T3-W/32, ABS32, CAPTO C3
6725935	T3-W/40, ABS40, CAPTO C4
6725936	T3-W/50, ABS50, CAPTO C5
6725937	T3-W/63, ABS63, CAPTO C6
6726048	T3-W/SCA1
6726050	T3-W/SCA2
6725948	T3-W/WE1
6725949	T3-W/WE2

1. For holding and correct positioning of the shrink chuck on the shrink unit.
2. Other than listed above, Please contact NT TOOL for details.

Cooling Plate



SAP No.	Model	
6726004	**T3-Z/WZ**	For depositing of shrunk out tools.

FKS Liquid Cooler (Sold Separately)



SAP No.	5050874
Model	FKS3400
Dimension WxLxH (mm)	W424 x L516 x H700
Air Pressure	4 bar/58 psi

1. The liquid cooler is a separate unit for cooling chucks which have been heated up during the shrinking process. With the start-button the cycle cooling and drying runs automatically.
2. Please always use zetasol120/5 coolant.
   (1ℓ of of Zetasol Emulsion liquid concentrate which needs to be diluted to 1:4 ratio is included.)

Liquid Cooler Options (sold separately)

FKS3400 Tool Holders



SAP No.	Model	shank size
6773725	**FKS03-HSK25/32**	HSK-25 / 32
6773726	**FKS03-HSK40/50**	HSK-40 /50 / F63 / UTS5040
6773728	**FKS03-SK30/40**	SK 30 / 40, CAT 30 / 40, BT 30 / 40

1. For holding and correct positioning of the shrink chuck on the liquid cooler.
2. Other than listed above, Please contact NT TOOL for details.

Inch to Metric (mm) → Inch × 25.4
Metric (mm) to Inch → Metric ÷ 25.4 or Metric × 0.03937

MEMO

SRK-HA1 , SRK-HB2

Economy Type Heater

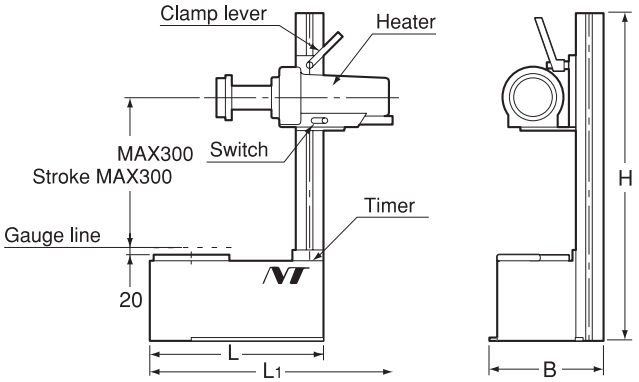

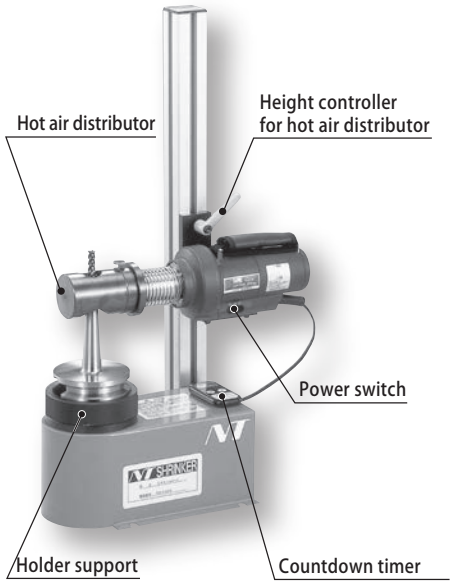

Code	Model	L	B	H	L1	Voltage	Watt	Anpere	kg
3064 00000111	**SRK- HA1**	275	190	660	380	100V (Single phase)	1200W	12A	7.5
3064 00000121	**SRK- HB2-200**	275	190	660	416	200V (Single phase)	3000W	6A	7.5
3064 00000124	**SRK- HB2-220**	275	190	660	416	220V (Single phase)	3000W	6A	7.5
3064 00000125	**SRK- HB2-230**	275	190	660	416	230V (Single phase)	3000W	6A	7.5

● Accessories

Power cord (3m), countdown timer and a pair of heat- resistant gloves are included. (Hot air distributor and holder support are sold separately.)

⚠ Not applicable for SR ※ 6A, SR ※ 8A and SRE.

Accessories

Hot air distributor (Heating head)

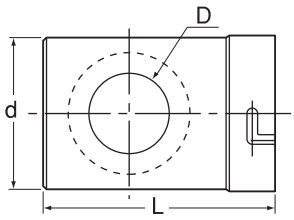

Model	Chuck type	Tool Shank Dia.	D	d	L
SRK-HA -HE15S	Slimtype (SRS)	ϕ 3 ~ 10	16	43	77
SRK-HA -HE27S	Slimtype (SRS)	ϕ 12 ~ 20	29	61	87
SRK-HA -HE15	Heavytype, DINstandard (SRK,SRD)	Heavy type ϕ 3 ~ 5	15	43	85
SRK-HA -HE26	Heavytype, DINstandard (SRK,SRD)	Heavy type ϕ6~10 DIN standard ϕ3~12	27	43	85
SRK-HA -HE32	Heavytype, DINstandard (SRK,SRD)	Heavy type ϕ12~20 DIN standard ϕ14~20	39	61	93
SRK-HA -HE40	Heavytype, DINstandard (SRK,SRD)	ϕ 25 ~ 32	59	79	122

Holder support

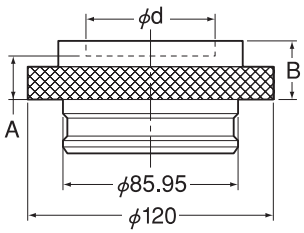

Model	d	A	B
SRK-SP -HSK 25	25.3	20	27
SRK-SP -HSK 32	32.3	20	27
SRK-SP -HSK 40	40.3	20	27
SRK-SP -BT30	46.3	20	27
SRK-SP -HSK 50	50.3	20	27
SRK-SP -HSK 63/BT40	63.8	20	27
SRK-SP -HSK 80	80.3	20	27
SRK-SP -HSK100/BT50	100.3	20	30

Inch to Metric (mm) → Inch × 25.4
Metric (mm) to Inch → Metric ÷ 25.4 or Metric × 0.03937

Special / Custom Sizes on request

SPN2-SRK-PS1

Presetting gauge

Metric only

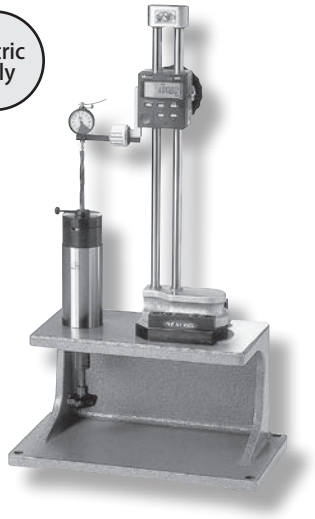

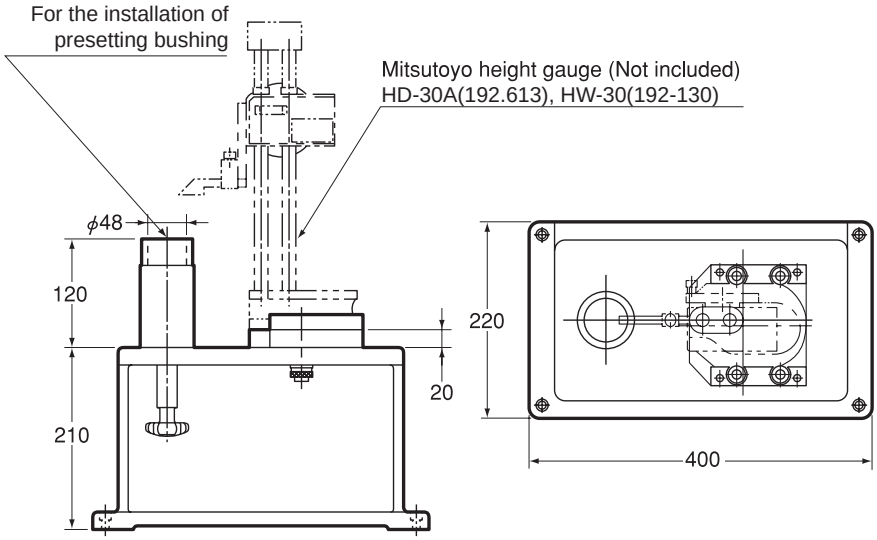

Metric measurement only.

Presetting bushing

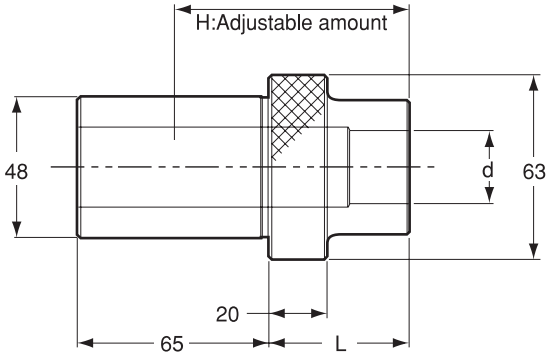

Model	d	L	H
SPN2 -SRK3-B1	3	10	10 ~ 55
SPN2 -SRK4-B1	4	12	12 ~ 57
SPN2 -SRK5-B1	5	15	15 ~ 60
SPN2 -SRK6-B1	6	26	26 ~ 71
SPN2 -SRK8-B1	8	26	26 ~ 71
SPN2 -SRK10-B1	10	32	32 ~ 77
SPN2 -SRK12-B1	12	37	37 ~ 82
SPN2 -SRK14-B1	14	37	37 ~ 82
SPN2 -SRK16-B1	16	40	40 ~ 85
SPN2 -SRK18-B1	18	40	40 ~ 85
SPN2 -SRK20-B1	20	42	42 ~ 87
SPN2 -SRK20-B2	20	55	55 ~ 100
SPN2 -SRK25-B1	25	48	48 ~ 93
SPN2 -SRK25-B2	25	65	65 ~ 110
SPN2 -SRK32-B1	32	51	51 ~ 96
SPN2 -SRK32-B2	32	75	75 ~ 120

Presetting ring

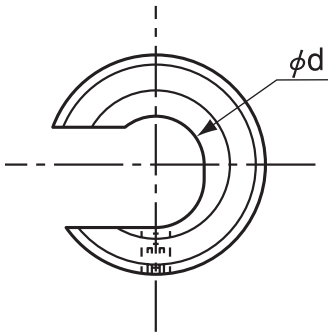

Model	ϕ d
SPN2-SRK-PR- ϕ d	3,4,5,6,8,10,12,14,16,18,20,25,32

Choose both presetting bushing and presetting ring according to shank dia.

Inch to Metric (mm) → Inch × 25.4
Metric (mm) to Inch → Metric ÷ 25.4 or Metric × 0.03937

Special / Custom Sizes on request

ZM-1 / ZM-2

Zero Master / 3D Master (Digital Measuring Equipment Of Reference Position)



Name		ZERO MASTER		3D MASTER	
Model		ZM-1		ZM-2	
Probe		With Short probe	With Long probe	With Short probe	With Long probe
Code		3900 10000001		3900 10000002	
L		102mm	143mm	113mm	153mm
Ls		24.8mm		50mm	
B		52mm		65mm	
ϕD		12mm		20mm	
ϕd		4mm	8mm	4mm	8mm
Measurement accuracy	Radial direction	±0.01mm	±0.02mm	±0.001mm	±0.002mm
	Axial direction	±0.01mm	±0.01mm	±0.001mm	±0.001mm
T:Usable dimension of probe		About 25mm	About 65mm	About 25mm	About 65mm
Weight		250g		660g	
Battery		CR2032		CR2032	

Long probe is sold separately.

Metric measurement only.

Application

Height measurement

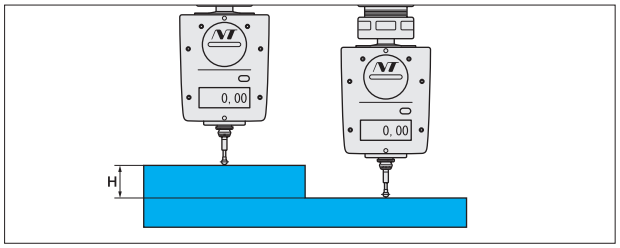

Width measurement

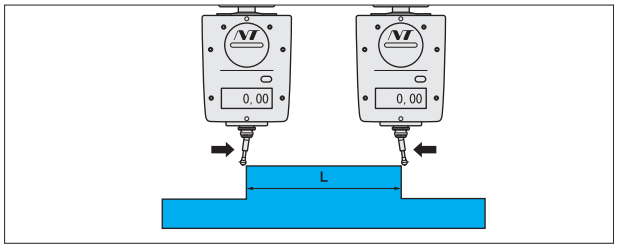

Hole and spindle center measurement ,Diameter measurement

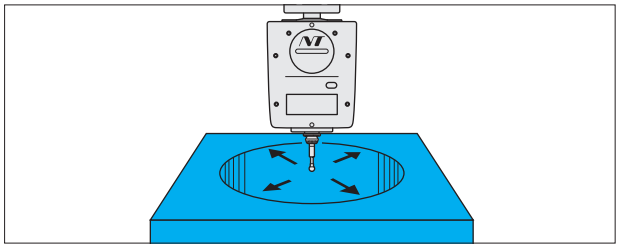

Parallelism measurement

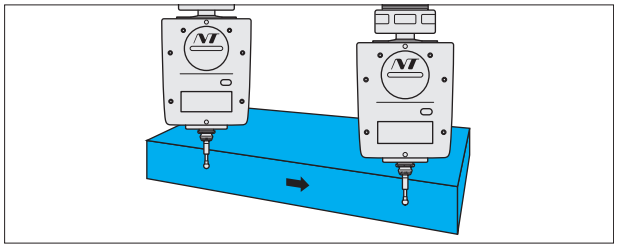

Accessories

Model	Code	Specification
ZM-P25	3900 20000025	Short probe(25mm)
ZM-P65	3900 20000065	Long probe(65mm)

Ordering Example

ZERO MASTER with short probe 25 mm

ZM-1

Inch to Metric (mm) → Inch × 25.4
Metric (mm) to Inch → Metric ÷ 25.4 or Metric × 0.03937

Special / Custom Sizes on request

OTP400 , OTP600

Contactless Tool Presetter

Feature

Metric & Inch

- Protect cutting edge by contactless measuring.
- Various cutting edge shapes can be measured.

IC1

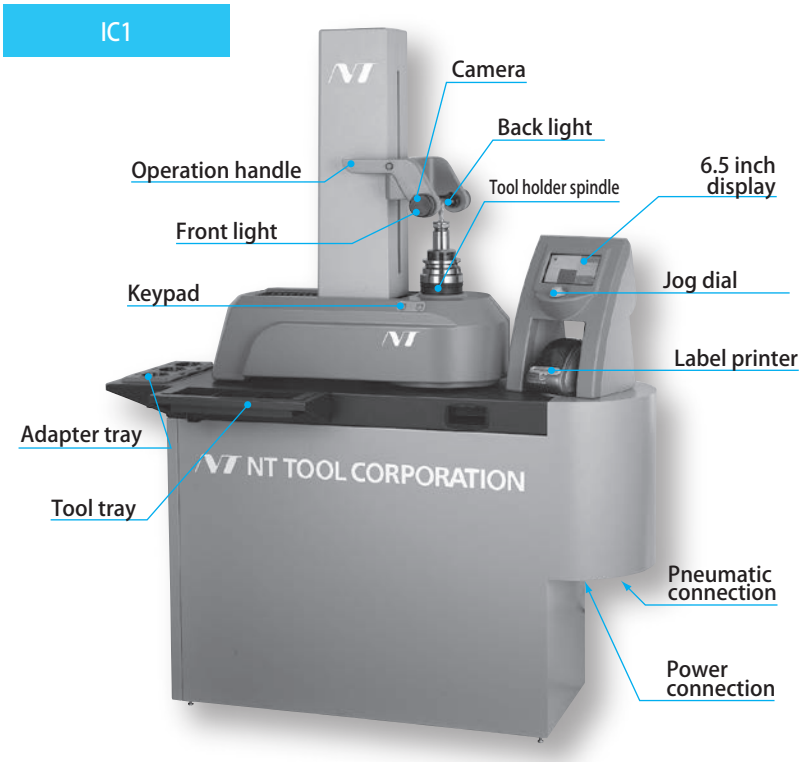

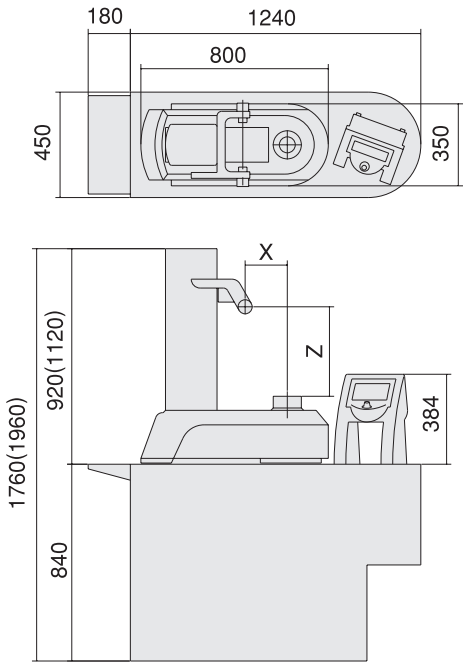

Specifications	OTP400-IC1	OTP600-IC1
External dimensions	1420 × 450 × 1760 (D × W × H)	1420 × 450 × 1960 (D × W × H)
Weight	110kg	115kg
Power supply	85 ～ 265V AC, 50/60Hz	
Power consumption	100VA and below	
Air pressure	0.4 ～ 0.6MPa	
Measurement	X-axis：ϕ0 ～ 400mm Z-axis：0 ～ 400mm	X-axis：ϕ0 ～ 400mm Z-axis：0 ～ 600mm
Min. readable unit	X-axis: ϕ0.001mm Z-axis:0.001mm	
Spindle size	Please use an adapter when using a holder other than NT50.	
Clamp method	Vacuum clamp	
Specifications of camera	488 × 468pixel	
Screen magnification ratio	12-fold	
Display size	6.5'	
Cutting edge measurement range	6.5mm × 6mm	
Menu manipulation method	Jog dial (knob button)	
Language selection	Japanese, English, German	
Accessories	Label printer, Label for printer, Adapter tray, Tool tray	

Switchable between Inch and Metric display.

Ordering Example

OTP400 - IC1

IC1type

Inch to Metric (mm) → Inch × 25.4
Metric (mm) to Inch → Metric ÷ 25.4 or Metric × 0.03937

Special / Custom Sizes on request

Adapter for OTP

Select an adapter from the following types when using shanks other than NT50.
※ The measuring range of the Z-axis is narrowed by adapters' thickness.

Ordering Example

OTP-NT50-NT30

For National taper shank



Code	Model	BT size	Loss in Z in mm ＊1
4994 00500030	**OTP-NT50-NT30**	BT30	20
4994 00500040	**OTP-NT50-NT40**	BT40	20



- Built-in calibration edge.

※ Tool presetter with vacuum mechanism draws in a holder with drawing force in proportion to the area of the holder.

For HSK shank



Code	Model	HSK size	Loss in Z in mm ＊1
4994 00502032	**OTP-NT50-HSK32A**	HSK32A(C, E), HSK40F(B, D)	50
4994 00502040	**OTP-NT50-HSK40A**	HSK40A(C, E), HSK50F(B, D)	50
4994 00502050	**OTP-NT50-HSK50A**	HSK50A(C, E), HSK63F(B, D)	50
4994 00502063	**OTP-NT50-HSK63A**	HSK63A(C, E), HSK80F(B, D)	50
4994 00502080	**OTP-NT50-HSK80A**	HSK80A(C, E), HSK100F(B, D)	60
4994 00502100	**OTP-NT50-HSK100A**	HSK100A(C, E), HSK125F(B, D)	100

- Built-in calibration edge.
- Without drive key.

※ Measuring the tools withtout clamp function.

For HSK shank with drawing-in mechanism



Code	Model	HSK size	Loss in Z in mm ＊1
4994 00506032	**OTP-NT50-HSK32A-M**	HSK32A(C, E), HSK40F(B, D)	75
4994 00506040	**OTP-NT50-HSK40A-M**	HSK40A(C, E), HSK50F(B, D)	75
4994 00506050	**OTP-NT50-HSK50A-M**	HSK50A(C, E), HSK63F(B, D)	75
4994 00506063	**OTP-NT50-HSK63A-M**	HSK63A(C, E), HSK80F(B, D)	75
4994 00506080	**OTP-NT50-HSK80A-M**	HSK80A(C, E), HSK100F(B, D)	105
4994 00506100	**OTP-NT50-HSK100A-M**	HSK100A(C, E), HSK125F(B, D)	105

- Built-in calibration edge.
- Drawing-in mechanism for HSK shanks (Wrench-operated)
- Adapter may conveniently remain attached to the presetter spindle when clamping tools that hold cutters with/without drive key.

For UTS shank



Code	Model	UTS size	Loss in Z in mm ＊1
4994 00505040	**OTP-NT50-CA-KM40**	UTS 5040	60
4994 00505050	**OTP-NT50-CA-KM50**	UTS 6350	60
4994 00505080	**OTP-NT50-CA-KM80**	UTS 10080	60

- Drawing-in mechanism for HSK shanks (Wrench-operated)
- No calibration edge.
- Adapter may conveniently remain attached to the presetter spindle when clamping tools that hold cutters.

※ When installing a holder to an adapter, wrench operation is hard.
Please make sure end face of the holder is contacting to the adapter.

＊1: Z-axis meas. range reduced value (mm)

Inch to Metric (mm) → Inch × 25.4
Metric (mm) to Inch → Metric ÷ 25.4 or Metric × 0.03937

Special / Custom Sizes on request

For Capto shank



Code	Model	Capto size	Loss in Z in mm ＊1
—	**OTP-NT50-ADC3**	Capto C3	30
—	**OTP-NT50-ADC4**	Capto C4	30
—	**OTP-NT50-ADC5**	Capto C5	30
—	**OTP-NT50-ADC6**	Capto C6	30
—	**OTP-NT50-ADC8**	Capto C8	70

- Manual tool clamping with clamping screw.
- With axial tool clamping.
- Without calibration edges.



Code	Model	Capto size	Loss in Z in mm ＊1
—	**OTP-NT50-ADC3-E**	Capto C3	130
—	**OTP-NT50-ADC4-E**	Capto C4	140
—	**OTP-NT50-ADC5-E**	Capto C5	95
—	**OTP-NT50-ADC6-E**	Capto C6	120
—	**OTP-NT50-ADC8-E**	Capto C8	140

- *Integrated calibration edges for size C3, C4.
- Manual tool clamping about ¾ turn.
- Comfortable usage since adapter must not be taken out of spindle in order to clamp tool.

Accessory(option)



Label printer (IC1 standard acc.)

Code	Model
4994 00510005	**OTP-PRINT-DY**

Cartidge-free thermal printer for printing out measured values, annotated with tool numbers, cutter numbers, adapters applied, and other information.



Label roll

Code	Model
4994 00510006	**OTP-LABEL-DY**

260 Labels (size 89 x 36mm) per roll.



Cleaning paste

Code	Model
4994 00510008	**OTP-PUTTY**



Cleanses the cutting edge for precise measurement.



Dust cover

Code	Model
4994 00510007	**OTP-PROTECTION**

Dust cover for IC1 of OTP400/OTP600 series PVC-made, clear & colorless.

AOTP New

Contactless Tool Presetter



Specification of AOTP

Code	Model	Retention Stud	
		BT	CAT
4940 00050011	AOTP-500-1A	PSB-7, PSB-8, PSB-14 PSB-19, PSB-7-OH PSB-8-OH	—
4940 00050012	AOTP-500-1B	PSB-20	—
4940 00050013	AOTP-500-1C	PSB-17	—
4940 00050024	AOTP-500-2D	PSB-24	PSC50-1
4940 00050025	AOTP-500-2E	PSB-50P	—

1. Please select a model based on the retention stud type.
2. Retention stud not shown in the above chart can be also used. Please contact NT Tool Corporation for details.

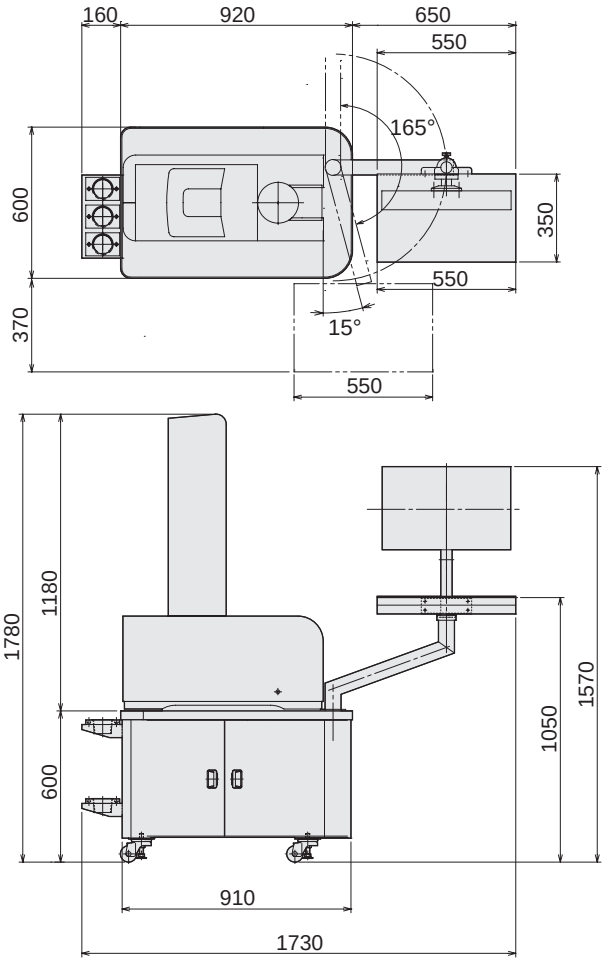

External dimensions	1730mm x 600mm x 1780mm (DxWxH)
Weight	280kg
Power supply	100 ~ 240V AC, 50/60Hz
Power consumption	300W
Air pressure	0.4 ~ 0.6Mpa
Measurement	X-axis ø400mm Z-axis 500mm
Minimum reading	0.001mm
Spindle Size	BT50 (Adapters for different spindle sizes available.) 1. When using an adapter, Z-axis measurement area will be narrower due to the height of the adapter. 2. Manual spindle rotation. Motor drive can be added as an option.
Clamp method	Mechanical clamp
Specifications of camera	1.3 million pixel CCD monochrome
Screen magnification ratio	30× Magnification
Display size	23.6"
Cutting edge measurement range	9.0 x 6.5mm
Menu manipulation method	Touch panel, mouse, keyboard
Language selection	English, Japanese, Korean
Accessories	Adapter tray

1. Switchable between Inch and Metric display.
2. Label printer is sold separately.
3. Specifications and design of the product are subject to change without notice.

Inch to Metric (mm) → Inch × 25.4
Metric (mm) to Inch → Metric ÷ 25.4 or Metric × 0.03937

Special / Custom Sizes on request

Unit Option

	Standard	Option
Spindle rotation	Manual	Automatic (Motor driven)
Cutting edge height adjustment	—	Height adjustment handle can be added to the front.

In addition to those options, customization of software and body is possible upon request. Please contact NT TOOL for details.

Adapter (Sold Separately)

To measure tool holders other than BT50 shank size, adapters are necessary.
Please contact NT TOOL for details.

For BT, CAT and SK

For BT 30 and CAT 30
For BT40, CAT40 and SK40
※Please designate the type of retention stud in use.



For HSK

HSK32, HSK40, HSK50,
HSK63, HSK100



For UTS

UTS6350, UTS10080



Accessories

Label printer

※ Sold Separately.

Model

AOTP-PRINT-KG

Thermal printer. No need for cartridges.
Measured value can be printed.
Tool name, model, comment registered beforehand can be printed together.

Label for printer

※ Sold Separately.

Model

AOTP-PRINT-LA

Approx. 70 labels.
Label size : 100 X 24mm

Cleaning putty

※ Included with AOTP.

Model

AOTP-DUST-C

To clean the cutting edge for accurate measurement.

Inch to Metric (mm) → Inch × 25.4
Metric (mm) to Inch → Metric ÷ 25.4 or Metric × 0.03937

Special / Custom Sizes on request

Basic Function

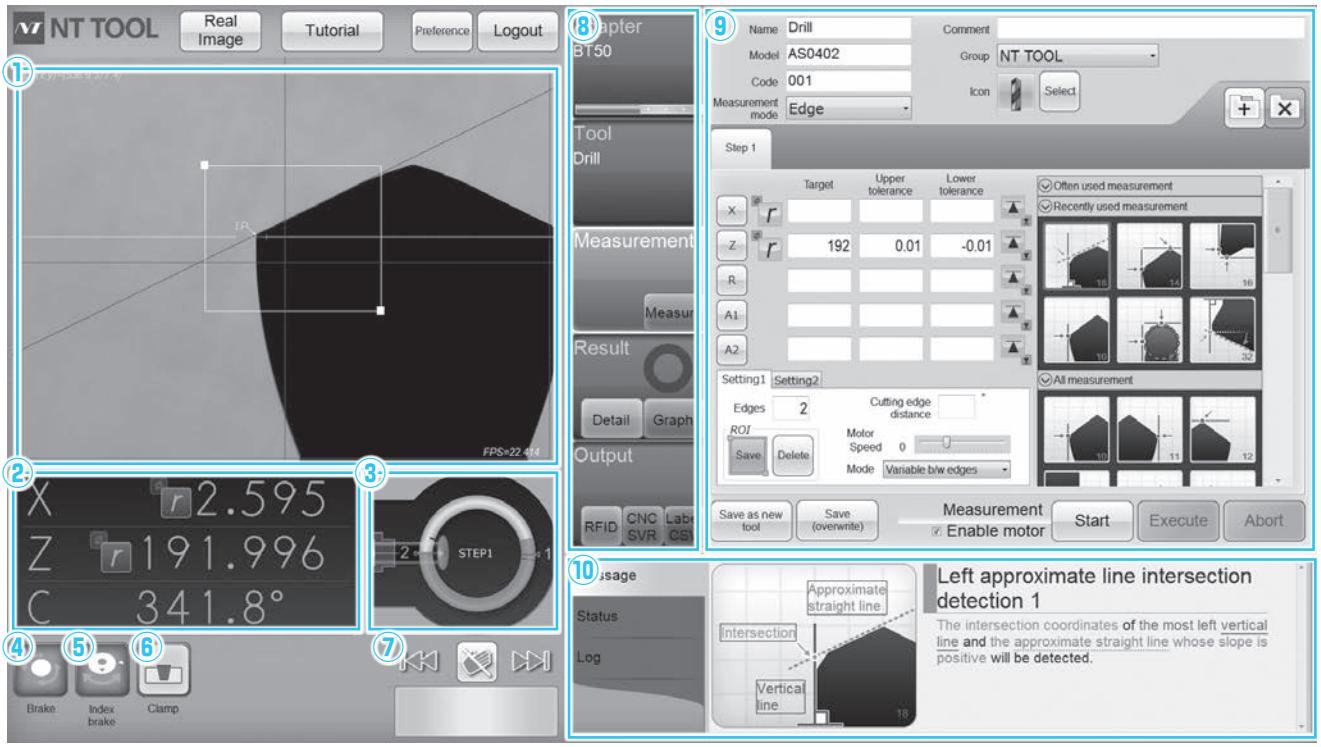

①Camera (Captured Image)
Actual field of view 9.0mm × 6.5mm
30× Magnification
35× Digital Zoom

②Coordinates
X=Radius/Diameter, Z=Height,
C=Rotational Position.
*X and Z value indicates position of the camera center when not measuring.

③Magic Eye
Cutting edge detection

④Break
Spindle can be stopped at any location.

⑤Index Break
Spindle can be pin-locked at 90 degrees.

⑥Clamp / Unclamp

⑦Spindle Control
Forward / reverse to the next / previous cutting edge.
: Free the motor.

⑧Operation Order Tab

⑨Operation Field

⑩Message Field

The software can be customized upon request.
Please contact NT Tool Corporation.

"Magic Eye" shows the positions of cutting edges.

Target cutting edge is always clear even with endmills and facemill cutters.

Beginning of measurement

The ring turns green in accordance with cutting tool rotation. Numbers are assigned on the detected cutting edges.

Actual cutting edges

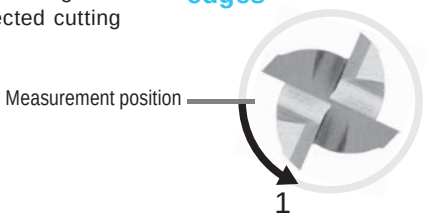

Magic eye

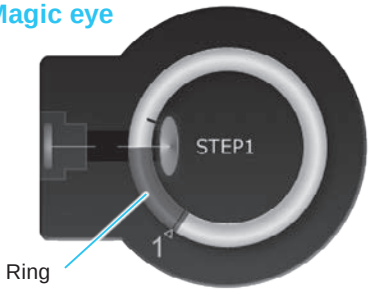

Detection of cutting edges completed.

Shows position of cutting edges in real-time.

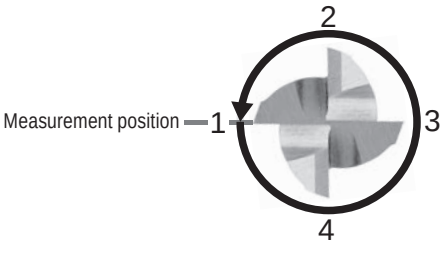

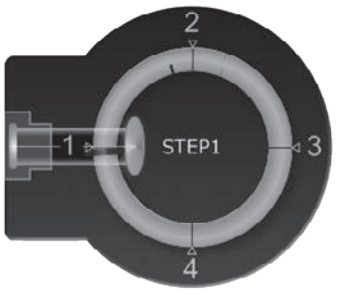

Inch to Metric (mm) → Inch × 25.4
Metric (mm) to Inch → Metric ÷ 25.4 or Metric × 0.03937

Special / Custom Sizes on request

Measurement function

Runout measurement of the cutting edge

Capture the area where you want to measure. Then, turn the spindle 360degrees.

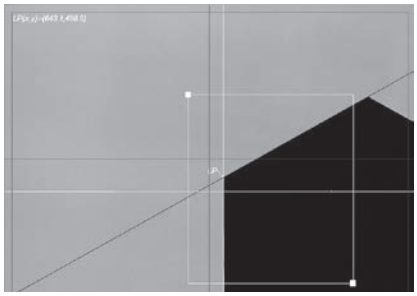

The measurement result against target value can be shown in ○×along with sound effects. The result can be also shown as a graph.



○: Good, ×: Bad

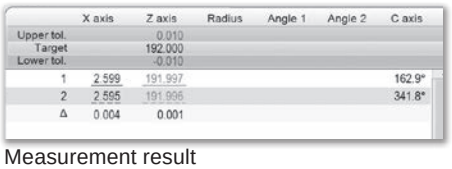

	X axis	Z axis	Radius	Angle 1	Angle 2	C axis
Upper tol.		0.010				
Target		192.000				
Lower tol.		-0.010				
1	2.599	191.997				162.9°
2	2.595	191.996				341.8°
Δ	0.004	0.001				

Measurement result

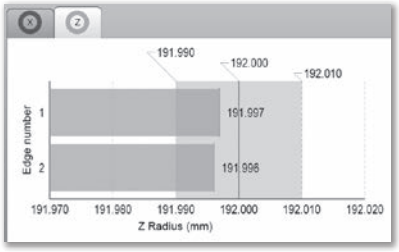

Graph

Target Bar

Easy diameter adjustment for boring bars with presetting target shown on the screen.



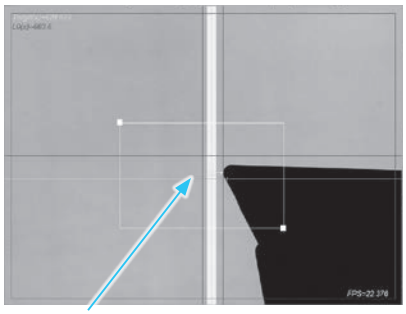

Presetting Target Range (Yellow color when the cutting edge is out of the range)

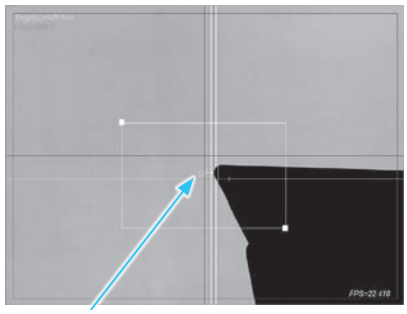

Presetting Target Range (Green color when the cutting edge is within the range)

Measuring Afterimage

The cutting tool's profile is plotted by rotating the spindle 360 degrees.



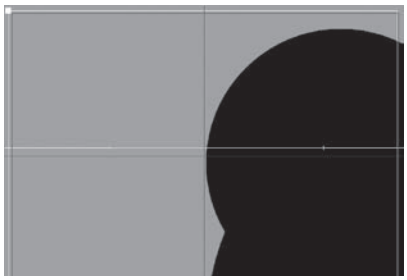

Before afterimage measurement

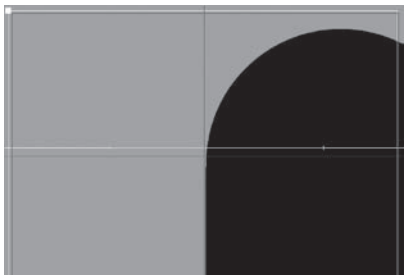

After afterimage measurement (afterimage of rotated tool is shown.)

Measuring Step Drill

Each step can be measured separately.



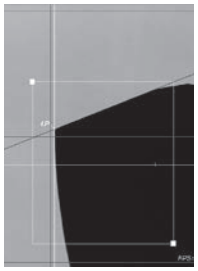

Step 1



Step 2

←Tab



	X axis	Z axis	Radius	Angle 1	Angle 2	C axis
Upper tol.						
Target						
Lower tol.						
1	3.255	211.728				71.2°
2	3.251	211.705				252.3°
Δ	0.004	0.024				

Measuring Radius

Nose-radius can be measured by based on contour of cutting edge.



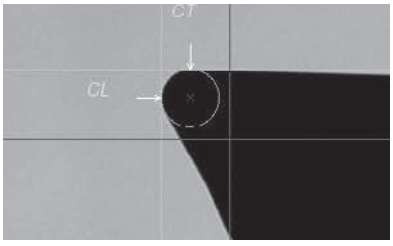

Real image of cutting edge

Wearing and chipping on cutting edge can be inspected.

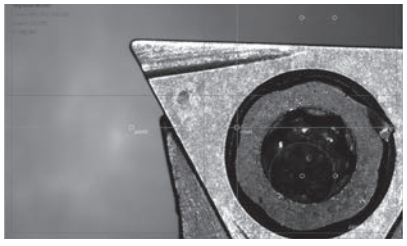

NTP-300A , NTP-400

Tool Presetter

● One presetter can measure various kinds of shanks with taper reduction parts.

NTP - 300A

Metric only



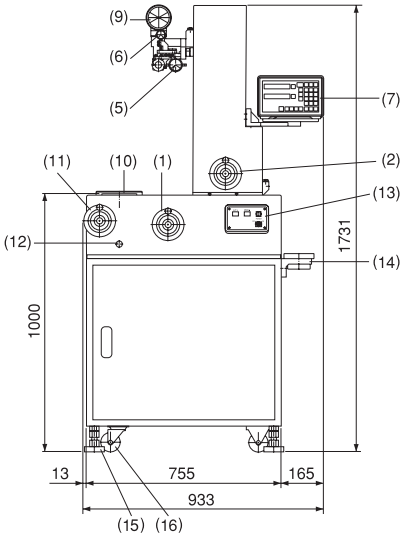

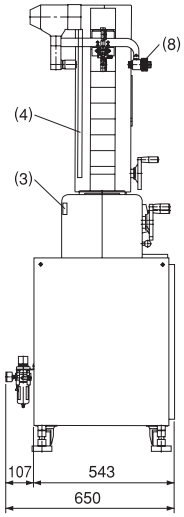

(1) X-axis handle
(2) Z-axis handle
(3) X-axis scale
(4) Z-axis scale
(5) X-axis dial gauge
(6) Z-axis dial gauge
(7) Digital display
(8) Optical projector (Light source unit)
(9) Optical projector (Projecting unit)
(10) Spindle
(11) Spindle turning handle
(12) Spindle fixing knob
(13) Control panel
(14) Tool setting pot
(15) Level bolts
(16) Casters

NTP - 400

Metric only



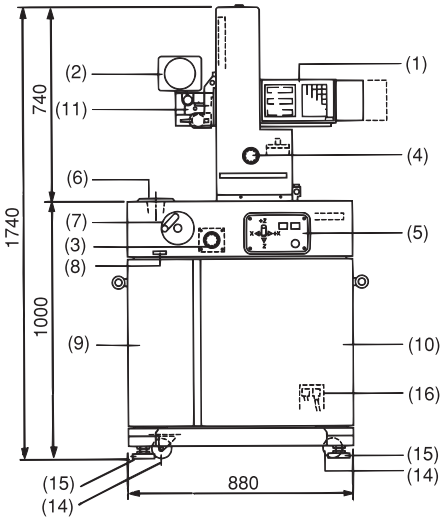

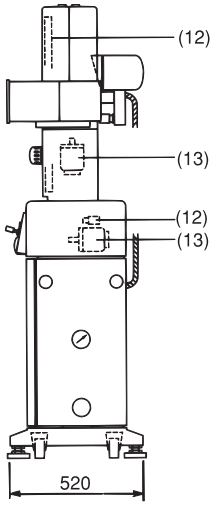

(1) Digital display
(2) Optical projector
(3) X-axis handle
(4) Z-axis handle
(5) Control panel
(6) Spinldle
(7) Spindle turning handle
(8) Spindle fixing knob
(9) Air cylinder storage unit
(10) Accessory storage unit
(11) Dial gauge for X,Z-axis
(12) Scale for X,Z-axis
(13) Motor for X,Z-axis
(14) Casters
(15) Level bolts
(16) Connecting unit

Inch to Metric (mm) → Inch × 25.4
Metric (mm) to Inch → Metric ÷ 25.4 or Metric × 0.03937

Special / Custom Sizes on request

Specifications		NTP-300A	NTP-400
Measurement range	X axis (Tool diameter) Z axis (Tool length)	D=0 ～ϕ300mm L=50 ～ 500mm	D=0 ～ϕ400mm L=50 ～ 500mm
Min. readable unit	X-axis	Digital display ϕ0.002mm（Diameter）0.001mm（Radius）	
	Z-axis	Digital display 0.005mm	
Dial gauge		X-axis 0.001mm Z-axis 0.01mm	
Spindle shank		BT30 ～ BT50 HSK32 ～ HSK100 UTS5040 ～ UTS10080（Special）	
Master gauge	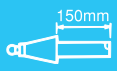	Including 150mm as standard.	
Column movement method		Handle（Manual）	Lever（Moter drive）
Power supply		AC100V±10% 50/60Hz If voltage exceeds AC 100V, please advise when ordering.	
Pneumatic supply	For auto tool lock	0.4 ～ 0.7MPa	
Weight		350kg	400kg
Standard accessories		Wrench set, Taper cleaner, Cover set, Lamp, Operating manual, Pedestal, Precision table, Spanner	

Metric measurement only.

Digital display	
A : Standard	B : with RS232C

Retention stud		
MASI	MASII	Others

When ordering others, please specify.

NTP-300A

Ordering Example

NTP-300A - A - BT40 - 2

- A: Digital display A type
- BT40: Holder Support
- 2: Retention stud MAS II

NTP-400

Ordering Example

NTP-400 - B - BT50 - 1

- B: Digital display B type
- BT50: Holder Support
- 1: Retention stud MAS I

Inch to Metric (mm) → Inch × 25.4
Metric (mm) to Inch → Metric ÷ 25.4 or Metric × 0.03937

Special / Custom Sizes on request

SPN1-HSK

HSK Clamper

Set

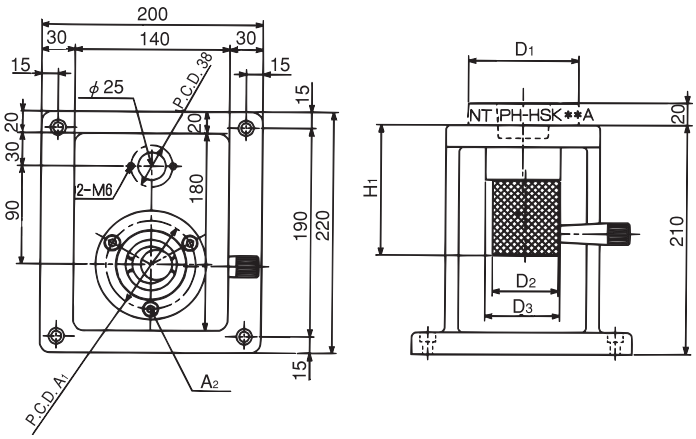

Holder support only

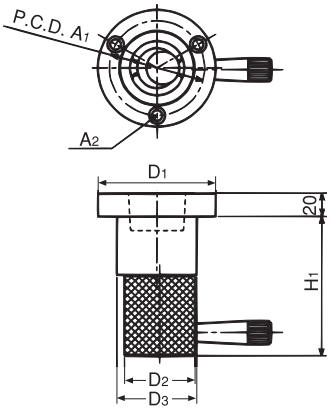

Feature

1. Easy to clamp holder as just insert HSK (A, C, or T) shank and rotate knob 90 degrees.
2. Tool length measurement is possible.

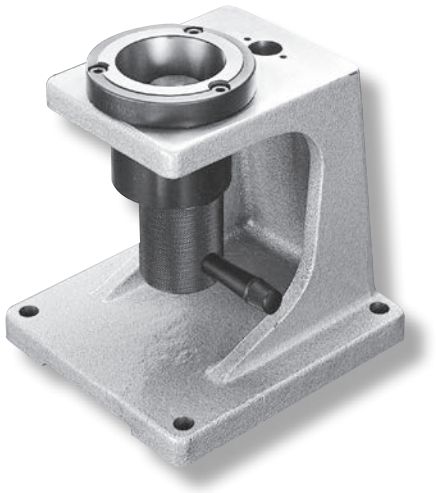

Set

Code	Model
5580 00001040	**SPN1 -HSK40A**
5580 00001050	**SPN1 -HSK50A**
5580 00001063	**SPN1 -HSK63A**
5580 00001100	**SPN1 -HSK100A**

Holder support only

Model	Code	D1	D2	D3	H1	A1	A2
PH -HSK40A	5584 00000040	80	47	54	127	65	3-M6
PH -HSK50A	5584 00000050	80	47	54	127	65	3-M6
PH -HSK63A	5584 00000063	118	60	85	125	102	3-M8
PH -HSK100A	5584 00000100	118	60	85	145	102	3-M8

Ordering Example

SPN1 - HSK63A

Base PBN-1 Shank size

Ordering Example

PH - HSK63A

Shank size

Inch to Metric (mm) → Inch × 25.4
Metric (mm) to Inch → Metric ÷ 25.4 or Metric × 0.03937

Special / Custom Sizes on request

HCL

HSK Clamper

HCL Body

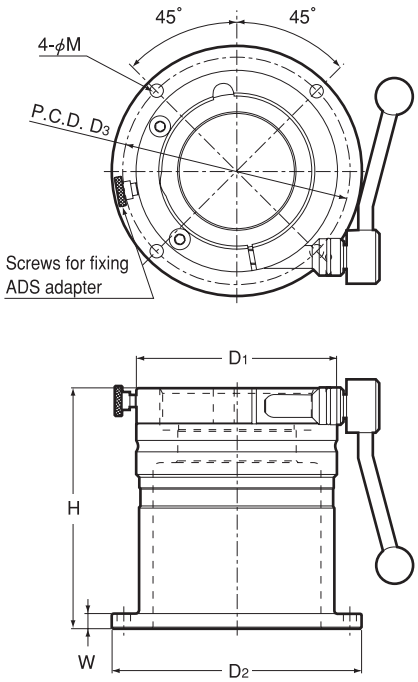

ADS (option) Adapter

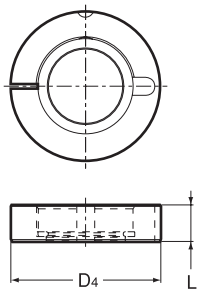

Body only



Body + Adapter



Application / Feature

1. Best suited for tightening milling chucks or collet chucks.
2. All types of HSK(A-F, and T)and UTS can be calmped.
3. With ADS adaptors, various different shanks can be clamped.
4. Tool holder can be clamped by turning the clamp lever only. The clamp lever can be turned in either direction.
5. ABS resins will prevent damages to taper or flange face of HSK/UTS shank.

Body

Code	Model	Shank size	D1	H	D2	D3	W	M	kg	Adapter
5590 06300000	**HCL -63**	HSK63、UTS6350	98	162	131	115	10	9 (For M8)	4.6	ADS-63 ＊＊
5590 10000000	**HCL -100**	HSK100、UTS10080	135	162	168	152	10	9 (For M8)	7.0	ADS-100 ＊＊

※ Do not use for measuring tool presetting length.

※ Fixing bolts (4pcs) for installing to surface plate or work table are NOT inclued.

Adapter

Model	Code	Shank size	D4	L	kg	Body
ADS -6325	5590 06325000	HSK25	63	24.2	0.5	HCL-63
ADS -6332	5590 06332000	HSK32	63	24.2	0.4	HCL-63
ADS -6340	5590 06340000	HSK40	63	24.2	0.3	HCL-63
ADS -6350	5590 06350000	HSK50、UTS5040	63	24.2	0.2	HCL-63
ADS -10063	5590 10063000	HSK63、UTS6350	100	24.2	0.9	HCL-100
ADS -10080	5590 10080000	HSK80	100	24.2	0.6	HCL-100

Body

Ordering Example

HCL - 63

Shank size

Adapter

Ordering Example

ADS - 63 50

Body size　Shank size

Inch to Metric (mm) → Inch × 25.4
Metric (mm) to Inch → Metric ÷ 25.4 or Metric × 0.03937

Special / Custom Sizes on request

SPZ-2

"R" Zero Setter

Metric only

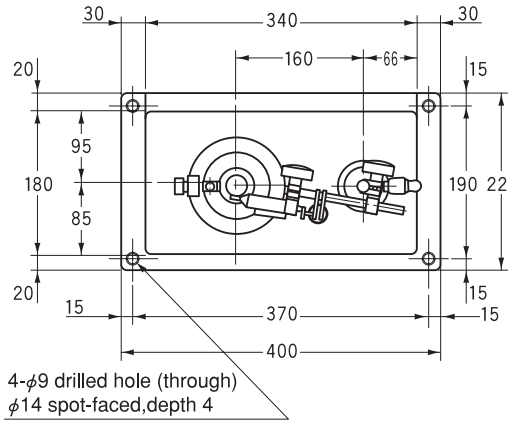

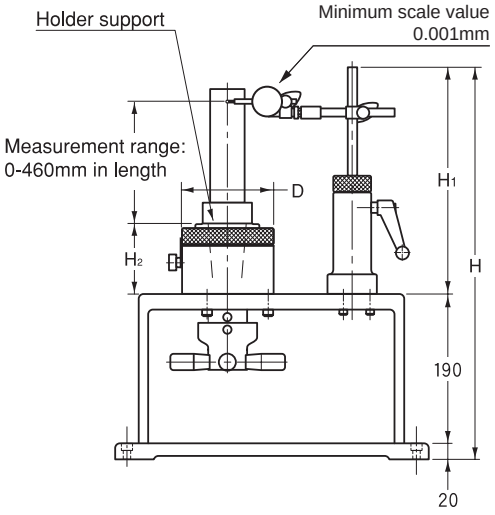

Feature

1. Less than 3 μm runout accuracy at 200mm(HSK, UTS)
2. Rotary holder support for BT, HSK, UTS.
3. Holder pull-in mechanism.

Code	Model	Holder support	D	H	H1	H2	kg	Retention stud
3030 00003011	**SPZ-2 -NT30-1**	NT30	118	660	450	90	39	BT:MAS Ⅰ MAS Ⅱ
3030 00004011	**SPZ-2 -NT40-1**	NT40	118	660	450	90	39	BT:MAS Ⅰ MAS Ⅱ
3030 00005011	**SPZ-2 -NT50-1**	NT50	158	710	500	120	46	BT:MAS Ⅰ MAS Ⅱ
3030 00003012	**SPZ-2 -NT30-2**	NT30	118	660	450	90	39	BT:JIS SK:DIN
3030 00004012	**SPZ-2 -NT40-2**	NT40	118	660	450	90	39	BT:JIS SK:DIN
3030 00005012	**SPZ-2 -NT50-2**	NT50	158	710	500	120	46	BT:JIS SK:DIN
3030 10004010	**SPZ-2 -HSK40**	HSK40A,HSK40C	118	660	450	90	40	
3030 10005010	**SPZ-2 -HSK50**	HSK50A,HSK50C	118	660	450	90	40	
3030 10006310	**SPZ-2 -HSK63**	HSK63A,HSK63C	118	660	450	90	39	
3030 10010010	**SPZ-2 -HSK100**	HSK100A,HSK100C	158	710	500	120	49	
3030 20635010	**SPZ-2 -UTS6350**	UTS6350,（HS63）	118	660	450	90	39	
3030 21008010	**SPZ-2 -UTS10080**	UTS10080,（HS100）	158	710	500	120	48	

※ Master shank is sold separaterly.
※ Retention stud with 90 degree pull-in angle (the angle of the part hooked by jaw) is not capable.
※ Metric measurement only.

Ordering Example

SPZ-2 - NT30 - 1

Holder Support　Retention size

Inch to Metric (mm) → Inch × 25.4
Metric (mm) to Inch → Metric ÷ 25.4 or Metric × 0.03937

Special / Custom Sizes on request

SPHV-3

Simple Setter

● Light weight and compact design. Placeable on work table. Digital scales adopted for both X axis and Z axis.

Metric only



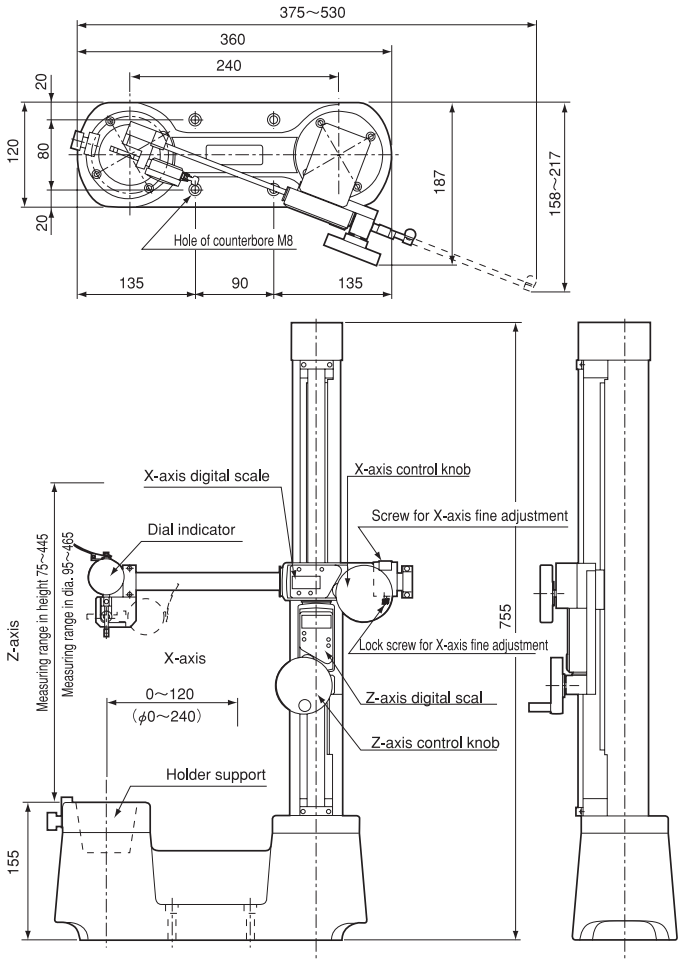

Code	Model	Taper size	Measuring range (mm)	Min readable unit (mm)	Applicable holder support
2600 30000030	**SPHV-3 -30**	NT30	X-axis ϕ0 ~ 240 Z-axis 75 ~ 445 Z height measurement 95 ~ 465 Z diameter measurement	0.01	NTSP-30
2600 30000040	**SPHV-3 -40**	NT40	X-axis ϕ0 ~ 240 Z-axis 75 ~ 445 Z height measurement 95 ~ 465 Z diameter measurement	0.01	NTSP-40
2600 30000050	**SPHV-3 -50**	NT50	X-axis ϕ0 ~ 240 Z-axis 75 ~ 445 Z height measurement 95 ~ 465 Z diameter measurement	0.01	NTSP-50

※ A suitable master arbor (GL=150) is included.
※ A longer master arbor (GL=300) is sold separately.
※ Holder support can be exchanged.
※ Holder support can not rotate.
※ Metric measurement only.

Ordering Example

SPHV-3 - 30
Support size

Inch to Metric (mm) → Inch × 25.4
Metric (mm) to Inch → Metric ÷ 25.4 or Metric × 0.03937

Special / Custom Sizes on request

SIMPLE SETTER

Expensive all purpose tool presetters are widely available in the market. However, customers have been spending a lot of time and money to make presetters for projection length of cutting tool.
NT's simple setter provides preset gauge suitable for customers needs.

Application

- Tool presetting for the use on machining centers and dedicated machines.

Feature

- Wide variety of types and sizes
- Quick-to-built-up preset gauge



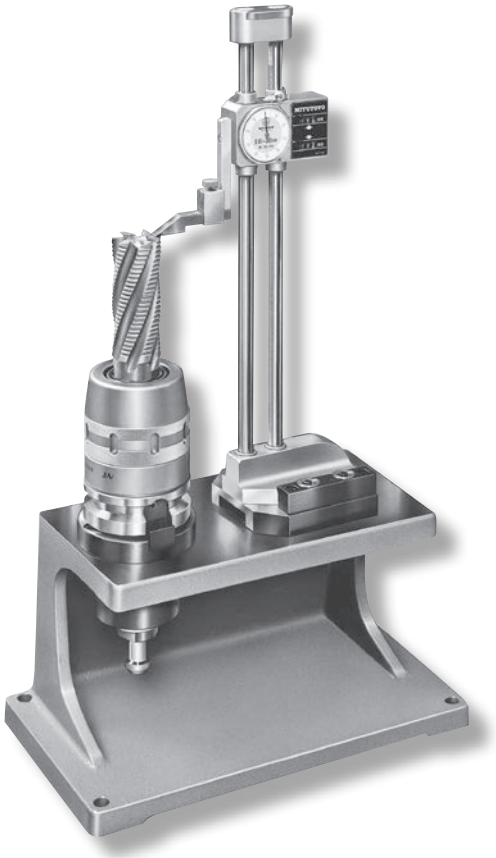

Inch to Metric (mm) → Inch × 25.4
Metric (mm) to Inch → Metric ÷ 25.4 or Metric × 0.03937

Special / Custom Sizes on request

	For NC Toolings	For NT stub holders	For tap adapters	For Tr. shank
Gauge	Height gauge 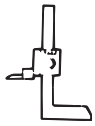 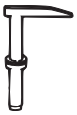 PG-1 conventional	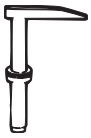 PG-1		
Gauge stand	 PS-H4  PS- ○	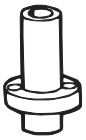 PS- ○		
Holder support	 PH-NT ○	 PH-STC ○ PH- ○ K PH-KH ○○ A	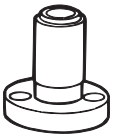 PH-WE ○	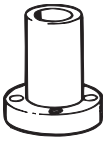 PH-Tr ○
Base	 PBN-1 ○ 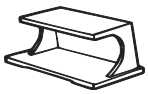 PBN-2 ○	 PBK-1 ○ 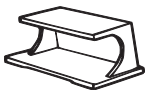 PBK-2 ○	 PBT-1 ○	 PBT-2 ○
Set-up	 SPN1-NT ○ - ○ Break-down: PG - 1, PS - ○, PH-NT ○, PBN-1 ○ — 1pc each	 SPK1-K ○ - ○ Break-down: PG - 1, PS - ○, PH-K ○, PBK-1 ○ — 1pc each	 SPW1-WE ○ - ○ Break-down: PG - 1, PS - ○, PH-WE ○, PBT-1 ○ — 1pc each	 SPT1-Tr ○ - ○ Break-down: PG - 1, PS - ○, PH-Tr ○, PBT-1 ○ — 1pc each
	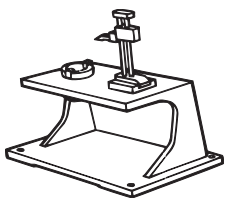 SPN2-NT ○ + Existing Height gauge Break-down: PS-H4, PH-NT ○, PBN-2 ○ — 1pc each	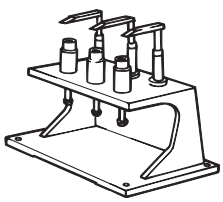 SPK2-K ○ - ○ Break-down: PG - 1, PS - ○, PH-K ○, PBK-2 ○ ·····1pc — 3pcs each	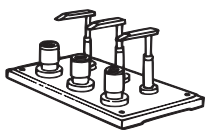 SPW2-WE ○ - ○ Break-down: PG - 1, PS - ○, PH-WE ○, PBT-2 ○ ·····1pc — 3pcs each	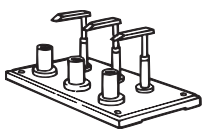 SPT2-Tr ○ - ○ Break-down: PG - 1, PS - ○, PH-Tr ○, PBT-2 ○ ·····1pc — 3pcs each

Inch to Metric (mm) → Inch × 25.4
Metric (mm) to Inch → Metric ÷ 25.4 or Metric × 0.03937

Special / Custom Sizes on request

SPN

Simple Setter For NC Tooling

SPN1

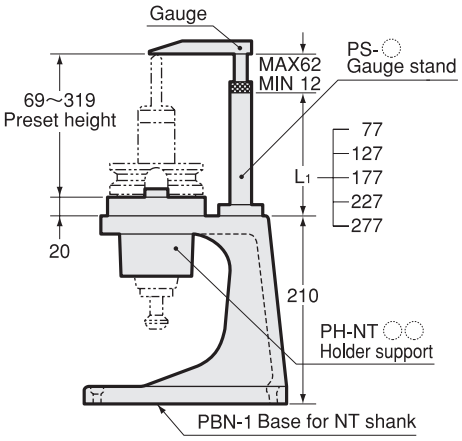

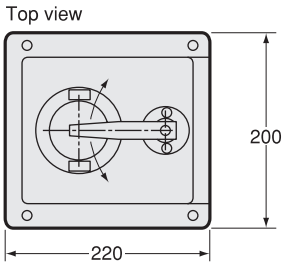

SPN2

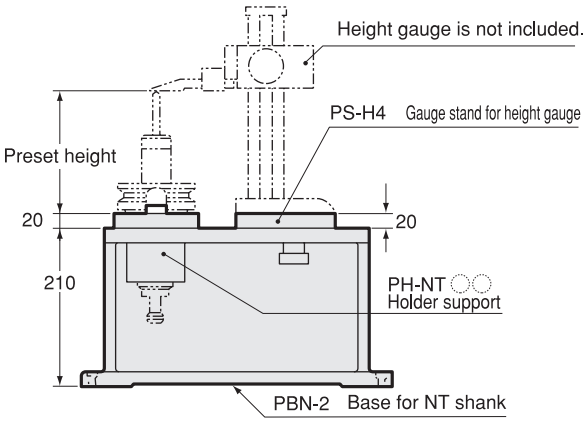

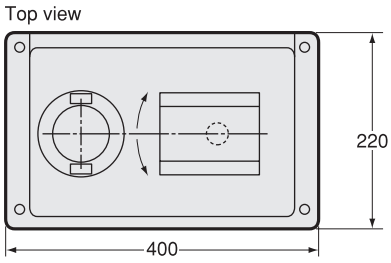

Gauge		Gauge stand		Holder support	Base	
	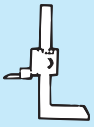					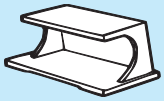
PG-1	conventional	**PS-○**	**PS-H4**	**PH-NT○**	**PBN-1○**	**PBN-2○**

Ordering Example

SPN1 - NT40 - 227

Base PBN-1 / Holder Support / Gauge stand height L1

Ordering Example

SPN2 - NT40 + PS-H4

Base PBN-2 / Holder Support / Gauge stand

Code

0090 01 1 0 4 227

227: Gauge stand height L1
1: Base PBN-1
4: Holder Support

Code

0090 01 2 0 4 4 00

4 00: Gauge stand PS-H4
2: Base PBN-2
4: Holder Support

Product code for each holder support is as follows. NT 30=1, NT 35=2, NT 40=4, NT 45=5 and NT 50=6.

Inch to Metric (mm) → Inch × 25.4
Metric (mm) to Inch → Metric ÷ 25.4 or Metric × 0.03937

Special / Custom Sizes on request

PG
Guage

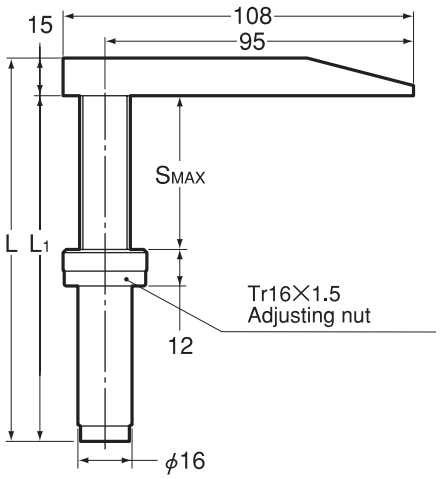

Code	Model	L	L1	SMAX	kg
0091 06000001	**PG-1**	128	113	50	0.4

PS
Guage stand

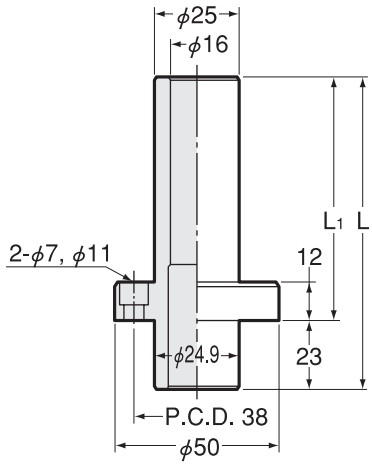

Code	Model	L	L1
0091 01000001	**PS -1**	100	77
0091 01000002	**PS -2**	150	127
0091 01000003	**PS -3**	200	177
0091 01000004	**PS -4**	250	227
0091 01000005	**PS -5**	300	277

Gauge stand for height gauge

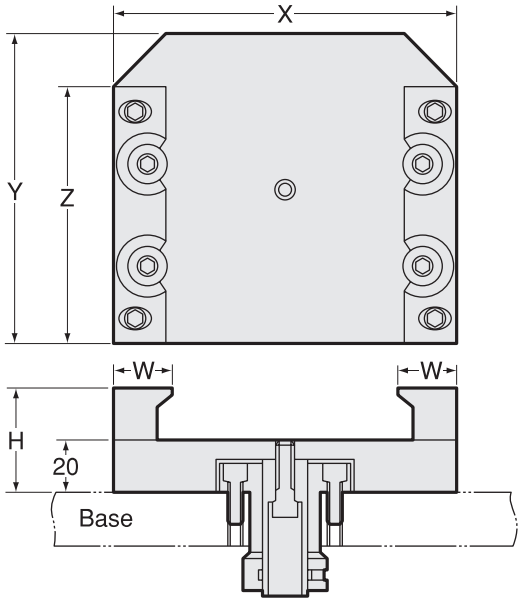

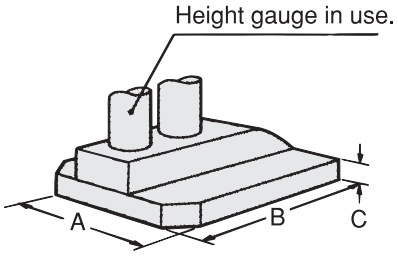

Code	Model	X	Y	Z	W	H	A	B	C
0091 01100004	**PS-H4**	136	135	110	21	37	91	135	12

1.When ordering special gauge stand, please let us know base dimensions A × B × C.
2.PS-H4 is used for Mitutoyo height gauge HD-30AX(192-613-10) or HW-30(192-130).

Holder support PH-NT

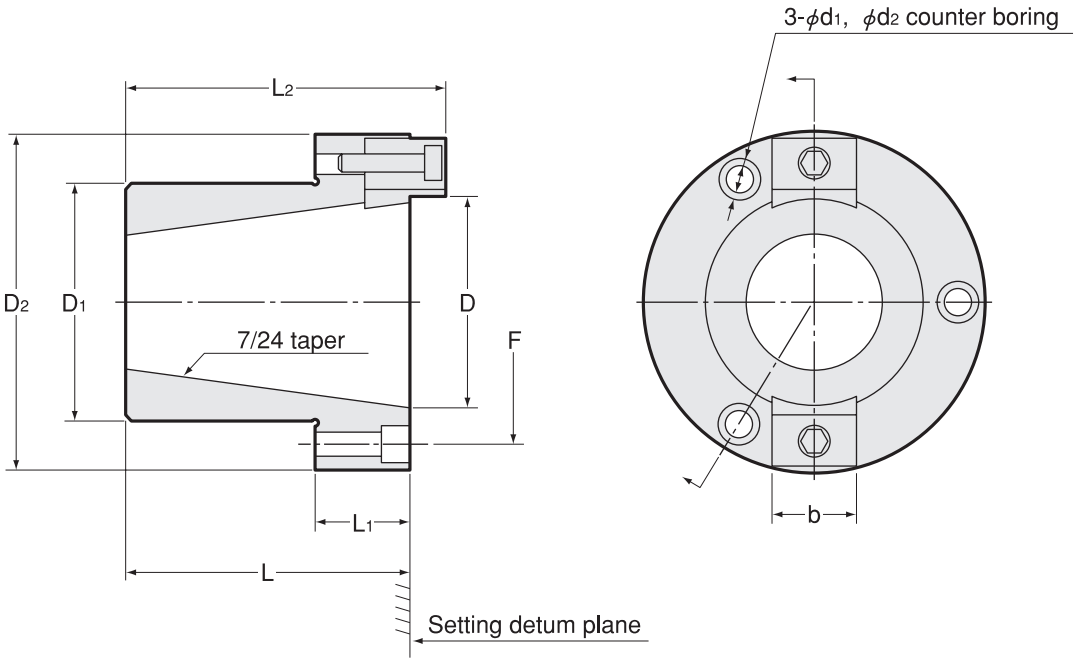

Code	Model	Shank size			D	D1	D2	L	L1	L2	F	b	d1	d2	kg
0091 02000030	**PH -NT30**	BT30	CAT30	SK30	31.75	48	74	45	20	52	59	15.7	7	11	0.9
0091 02000035	**PH -NT35**	BT35	—	—	38.1	48	74	50	20	57	59	13.8	7	11	0.8
0091 02000040	**PH -NT40**	BT40	CAT40	SK40	44.45	54	80	55	20	62	65	15.7	7	11	1.0
0091 02000045	**PH -NT45**	BT45	—	SK45	57.15	68	100	75	20	85	81	18.9	9	14	1.8
0091 02000050	**PH -NT50**	BT50	CAT50	SK50	69.85	78	110	90	20	100	92	25.3	9	14	2.3

To set CAT or SK shank holder, remove one of the stopper keys on the holder support PH-NT.

Base PBN

TYPE1

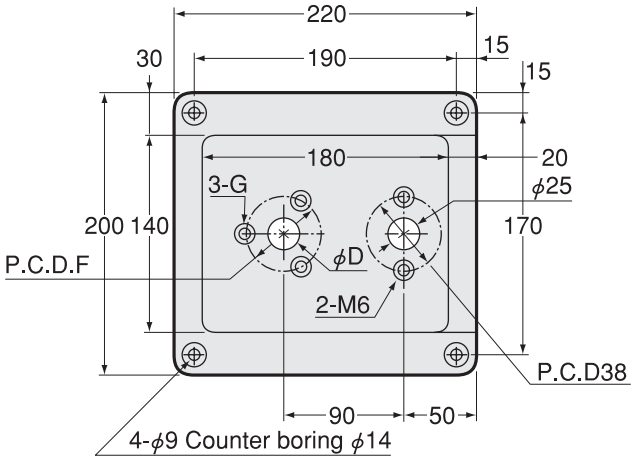

TYPE2

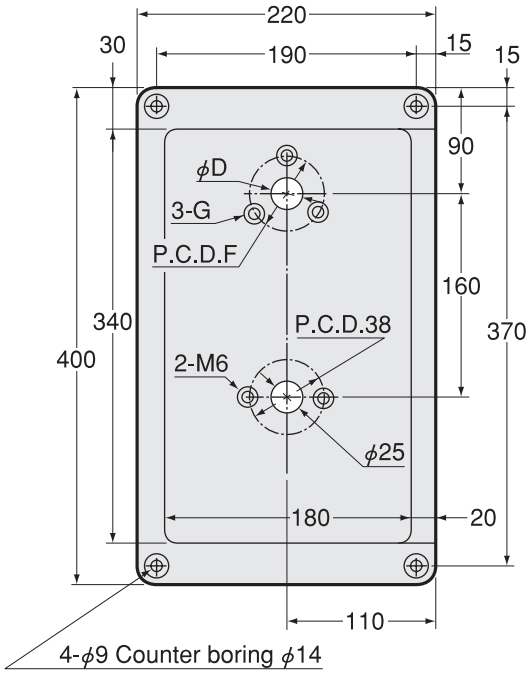

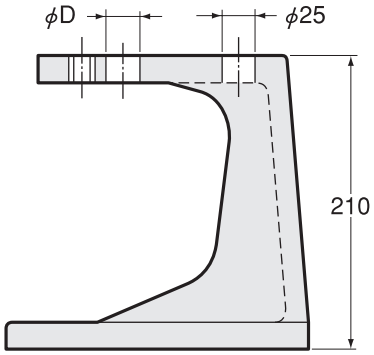

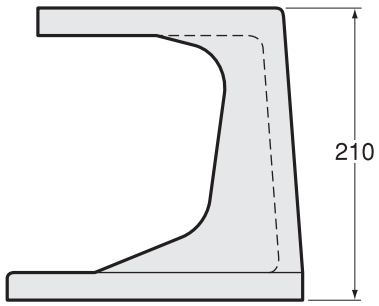

Code	Model	Type	ϕF	ϕD $^{+0.2}_{0}$	G	Holder support	Gauge stand
0091 07000130	**PBN -1-30**	1	59	48	M6	PH-NT30	PS-1 ~ PS-5 PS-H4
0091 07000230	**PBN -2-30**	2	59	48	M6	PH-NT30	PS-1 ~ PS-5 PS-H4
0091 07000135	**PBN -1-35**	1	59	48	M6	PH-NT35	PS-1 ~ PS-5 PS-H4
0091 07000235	**PBN -2-35**	2	59	48	M6	PH-NT35	PS-1 ~ PS-5 PS-H4
0091 07000140	**PBN -1-40**	1	65	54	M6	PH-NT40	PS-1 ~ PS-5 PS-H4
0091 07000240	**PBN -2-40**	2	65	54	M6	PH-NT40	PS-1 ~ PS-5 PS-H4
0091 07000145	**PBN -1-45**	1	81	68	M8	PH-NT45	PS-1 ~ PS-5 PS-H4
0091 07000245	**PBN -2-45**	2	81	68	M8	PH-NT45	PS-1 ~ PS-5 PS-H4
0091 07000150	**PBN -1-50**	1	92	78	M8	PH-NT50	PS-1 ~ PS-5 PS-H4
0091 07000250	**PBN -2-50**	2	92	78	M8	PH-NT50	PS-1 ~ PS-5 PS-H4

SPK-K

Simple Setter For Kd

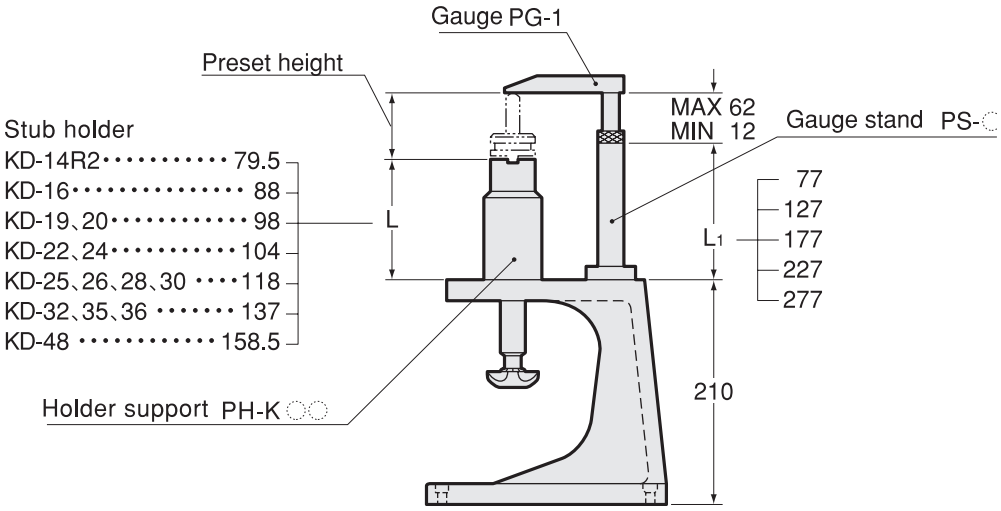

SPK1

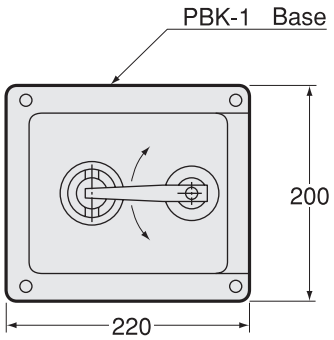

SPK2

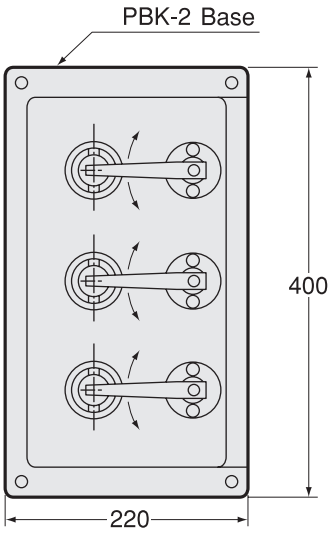

Gauge	Gauge stand	Holder support	Base
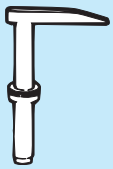 PG-1	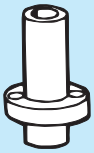 PS-○	 PH-○K	 PBK-1○ 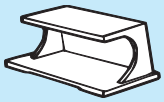 PBK-2○

Ordering Example

SPK1 - K16 - 77

Base PBK-1 | Holder Support | Gauge stand height L1

Code

0090 02 1 16 077

Gauge stand height L1

Base PBK-1 | Holder Support

Inch to Metric (mm) → Inch × 25.4
Metric (mm) to Inch → Metric ÷ 25.4 or Metric × 0.03937

Special / Custom Sizes on request

PG
Guage

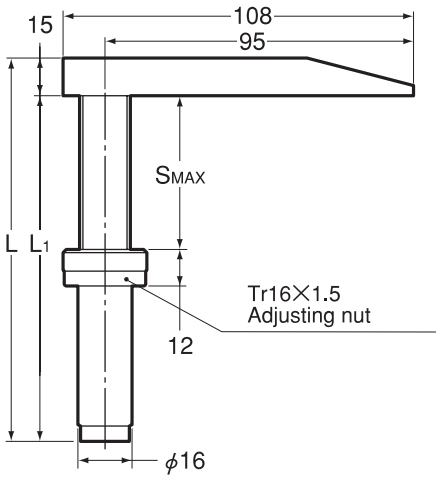

Code	Model	L	L1	SMAX	kg
0091 06000001	**PG-1**	128	113	50	0.4

PS
Guage stand

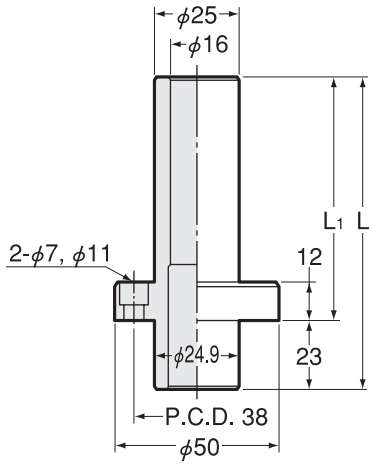

Code	Model	L	L1
0091 01000001	**PS -1**	100	77
0091 01000002	**PS -2**	150	127
0091 01000003	**PS -3**	200	177
0091 01000004	**PS -4**	250	227
0091 01000005	**PS -5**	300	277

PH-K
Holder support

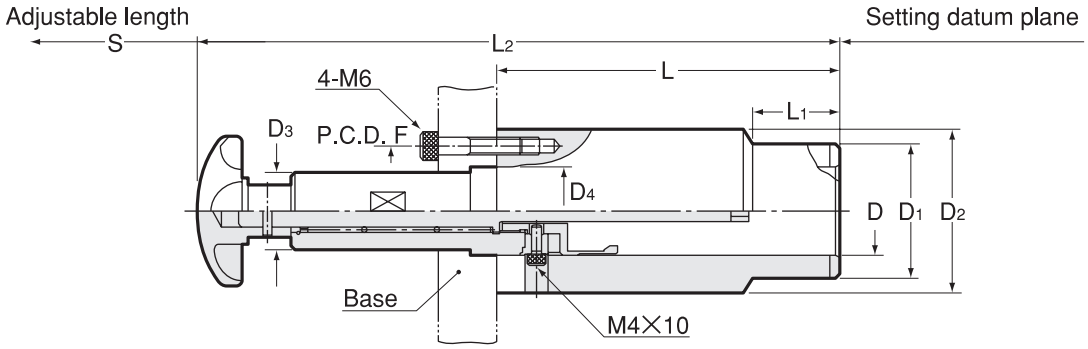

Code	Model	D	D1	D2	D3	D4	L	L1	L2	F	S	kg
0091 03000014	**PH -K14R2**	14	23	55	24	25	79.5	30	182	45	45	1.2
0091 03000016	**PH -K16**	16	25	55	24	25	88	30	190.5	45	45	1.3
0091 03000019	**PH -K19**	19	28	55	24	25	98	30	200.5	45	45	1.5
0091 03000020	**PH -K20**	20	28	55	24	25	98	30	200.5	45	45	1.5
0091 03000022	**PH -K22**	22	32	55	24	25	104	30	206.5	45	45	1.6
0091 03000024	**PH -K24**	24	32	55	24	25	104	30	206.5	45	45	1.6
0091 03000025	**PH -K25**	25	35	55	24	25	118	30	220.5	45	45	1.8
0091 03000026	**PH -K26**	26	35	55	24	25	118	30	220.5	45	45	1.8
0091 03000028	**PH -K28**	28	38	55	24	25	118	30	220.5	45	45	1.8
0091 03000030	**PH -K30**	30	40	55	24	25	118	30	220.5	45	45	
0091 03000032	**PH -K32**	32	42	55	24	25	137	30	239.5	45	45	1.9
0091 03000035	**PH -K35**	35	45	55	24	25	137	30	239.5	45	45	1.9
0091 03000036	**PH -K36**	36	45	55	24	25	137	30	239.5	45	45	1.8
0091 03000048	**PH -K48**	48	63	65	24	25	158.5	30	261	45	45	

PBK
Base

TYPE1

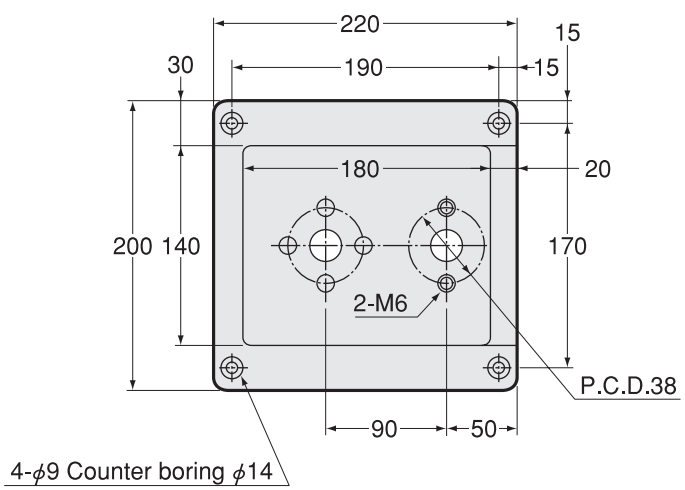

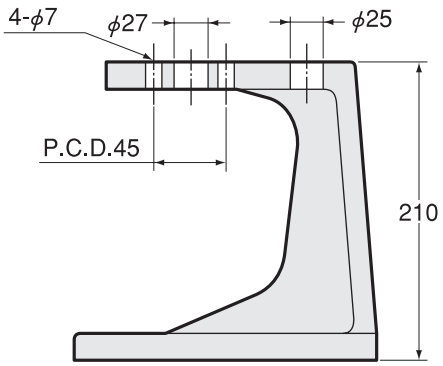

TYPE2

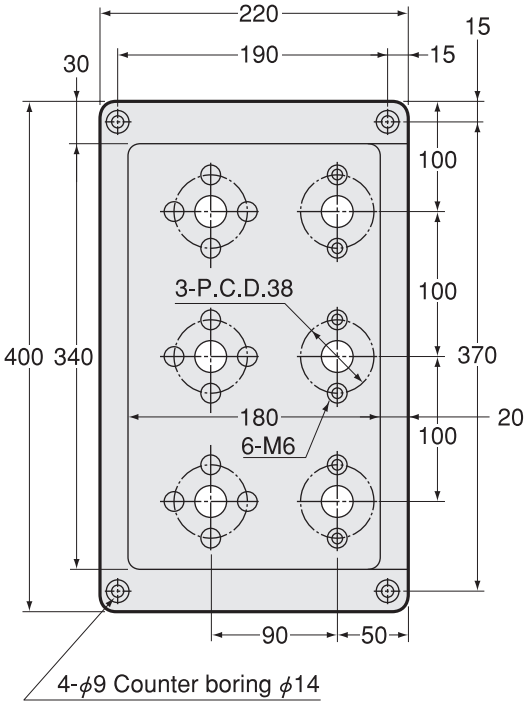

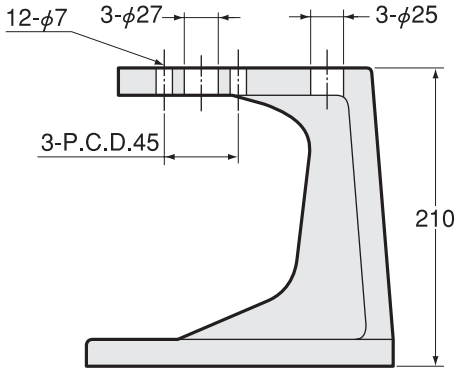

Code	Model	Type	Holder support	Gauge stand
0091 07100145	**PBK -1-45**	1	PH-K14R2 ~ PH-K48	PS-1 ~ PS-5
0091 07100245	**PBK -2-45**	2	PH-K14R2 ~ PH-K48	PS-1 ~ PS-5

Inch to Metric (mm) → Inch × 25.4
Metric (mm) to Inch → Metric ÷ 25.4 or Metric × 0.03937

Special / Custom Sizes on request

SPK-KHA

Simple Setter For KH-A, KH-E

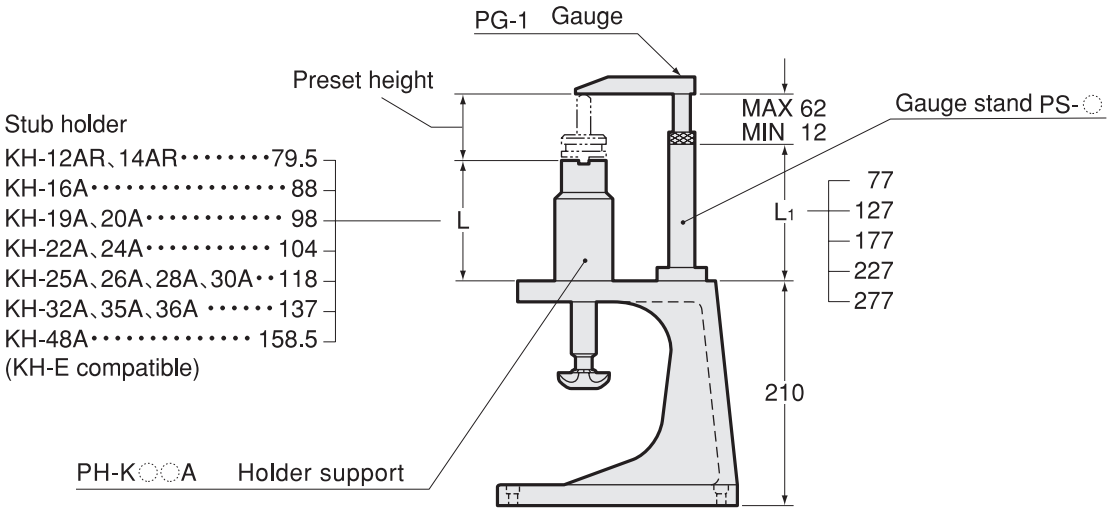

SPK1

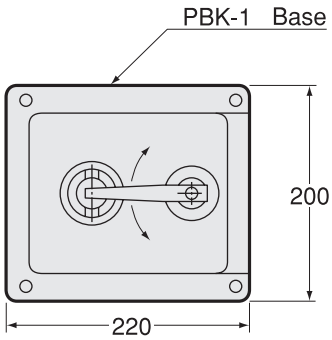

SPK2

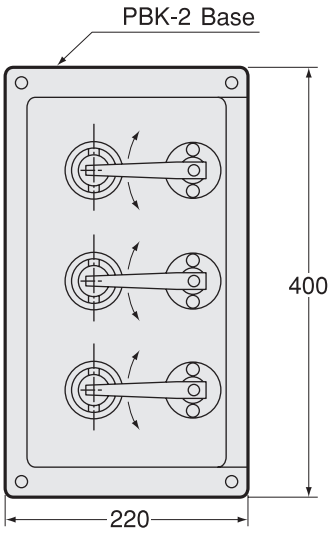

Gauge	Gauge stand	Holder support	Base
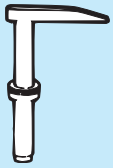 PG-1	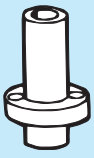 PS-◯	 PH-KH◯A	 PBK-1◯ 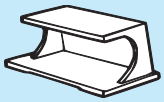 PBK-2◯

Ordering Example

SPK1 - KH16A - 77

Base PBK-1 | Holder Support | Gauge stand height L1

Code

0090 12 1 16 077

Gauge stand height L1

Base PBK-1 | Holder Support

Inch to Metric (mm) → Inch × 25.4
Metric (mm) to Inch → Metric ÷ 25.4 or Metric × 0.03937

Special / Custom Sizes on request

PG
Guage

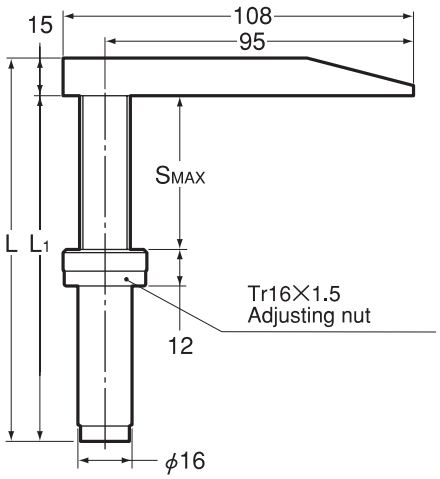

Code	Model	L	L1	SMAX	kg
0091 06000001	**PG-1**	128	113	50	0.4

PS
Guage stand

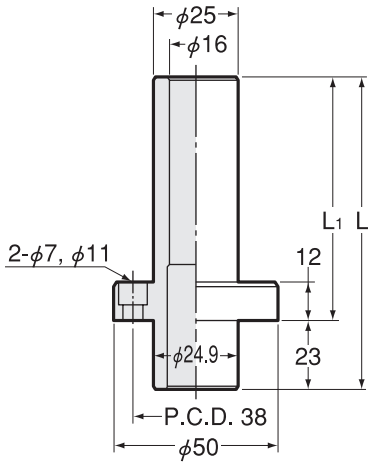

Code	Model	L	L1
0091 01000001	**PS -1**	100	77
0091 01000002	**PS -2**	150	127
0091 01000003	**PS -3**	200	177
0091 01000004	**PS -4**	250	227
0091 01000005	**PS -5**	300	277

PH-KHA
Holder support

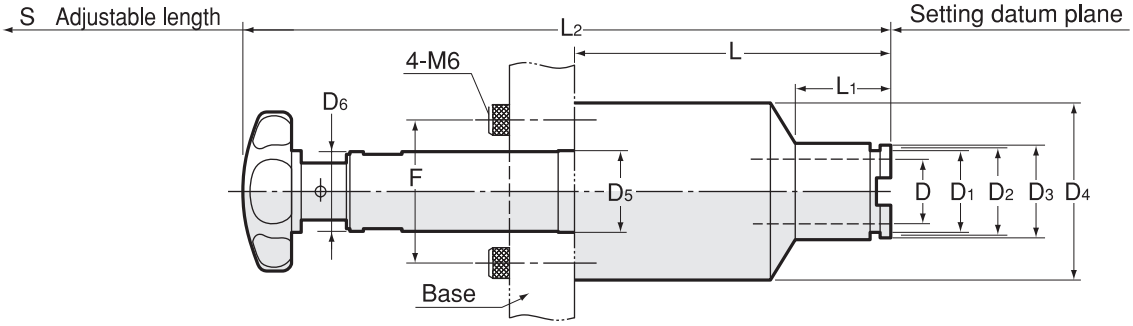

Code	Model	D	D1	D2	D3	D4	D5	D6	L	L1	L2	F	S	kg
0091 13000012	**PH -KH12AR**	12	16.5	18	20	55	25	24	79.5	30	182	45	45	1.2
0091 13000014	**PH -KH14AR**	14	20	22	24	55	25	24	79.5	30	182	45	45	1.2
0091 13000016	**PH -KH16A**	16	24	26.4	29	55	25	24	88	30	190.5	45	45	1.4
0091 13000019	**PH -KH19A**	19	27	29.4	32	55	25	24	98	30	200.5	45	45	1.5
0091 13000020	**PH -KH20A**	20	27	29.4	32	55	25	24	98	30	200.5	45	45	1.5
0091 13000022	**PH -KH22A**	22	30	32.4	35	55	25	24	104	30	206.5	45	45	1.6
0091 13000024	**PH -KH24A**	24	32	34.4	37	55	25	24	104	30	206.5	45	45	1.6
0091 13000025	**PH -KH25A**	25	35	37.4	41	55	25	24	118	30	220.5	45	45	1.9
0091 13000026	**PH -KH26A**	26	35	37.4	41	55	25	24	118	30	220.5	45	45	1.8
0091 13000028	**PH -KH28A**	28	38	40.4	44	55	25	24	118	30	220.5	45	45	1.8
0091 13000030	**PH -KH30A**	30	38	40.4	44	55	25	24	118	30	220.5	45	45	1.8
0091 13000032	**PH -KH32A**	32	41	43.8	47	55	25	24	137	30	239.5	45	45	2.0
0091 13000035	**PH -KH35A**	35	45	47.8	52	55	25	24	137	30	239.5	45	45	1.9
0091 13000036	**PH -KH36A**	36	45	47.8	52	55	25	24	137	30	239.5	45	45	1.9
0091 13000048	**PH -KH48A**	48	62	65.4	68	70	25	24	158.5	30	261	45	45	3.1

Inch to Metric (mm) → Inch × 25.4
Metric (mm) to Inch → Metric ÷ 25.4 or Metric × 0.03937

Special / Custom Sizes on request

PBK Base

TYPE1

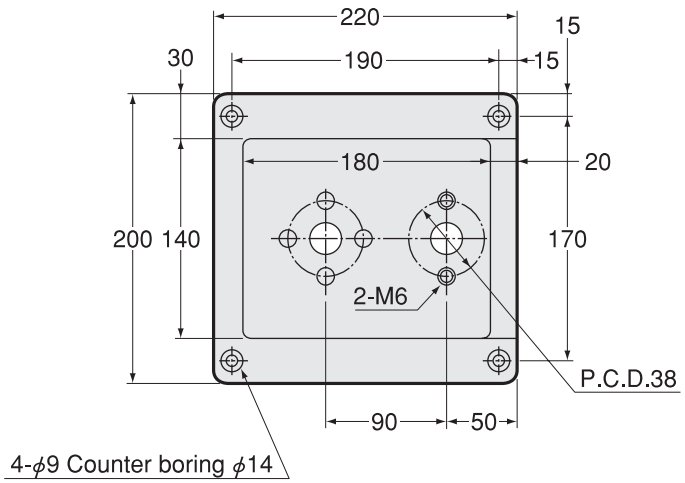

TYPE2

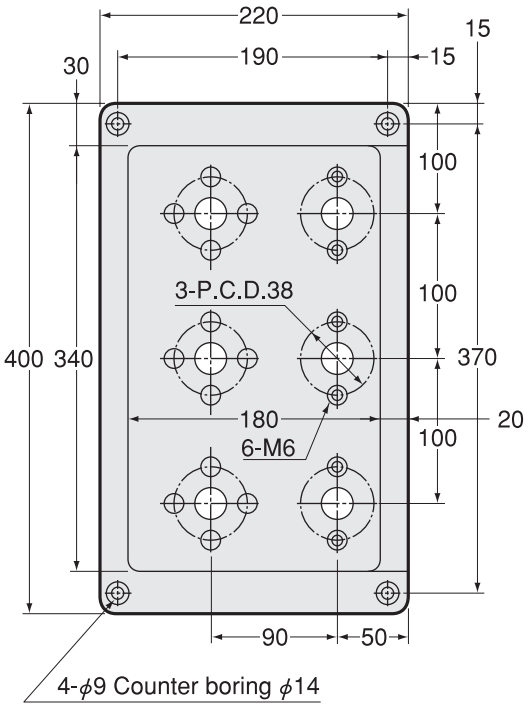

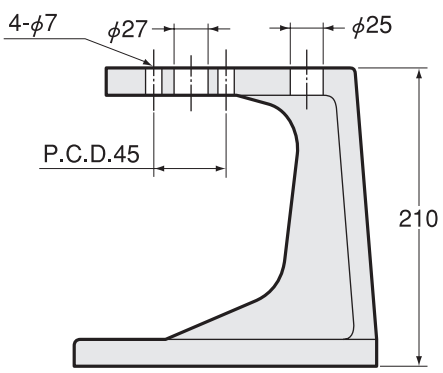

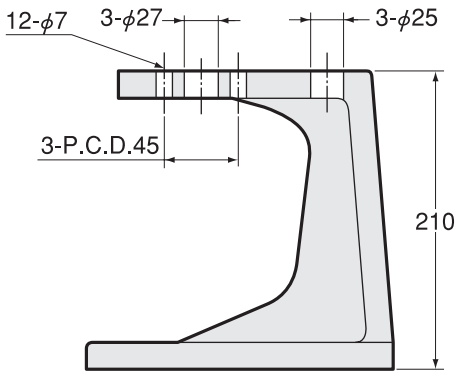

Code	Model	Type	Holder support	Gauge stand
0091 07100145	**PBK -1-45**	1	PH-KH12AR ~ PH-KH48A	PS-1 ~ PS-5
0091 07100245	**PBK -2-45**	2	PH-KH12AR ~ PH-KH48A	PS-1 ~ PS-5

SPW

Simple Setter For Tap Adapter

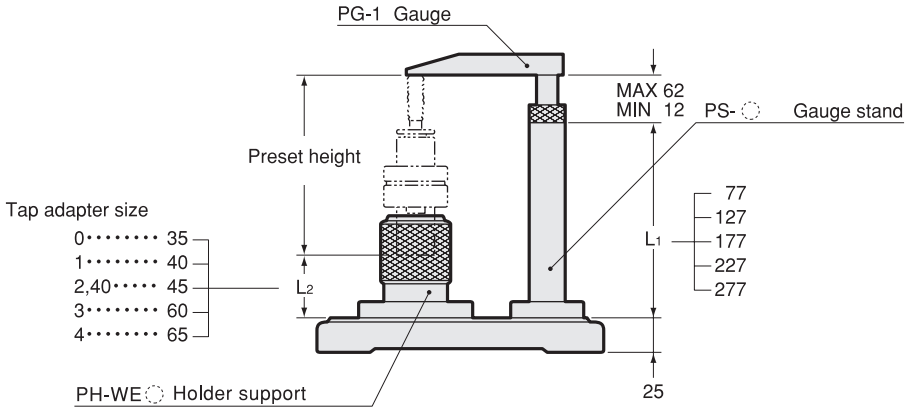

SPW1

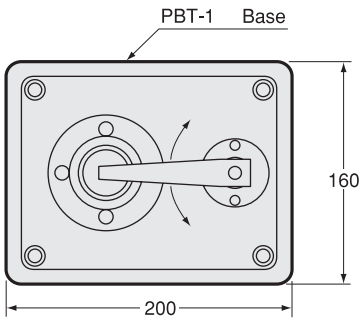

SPW2

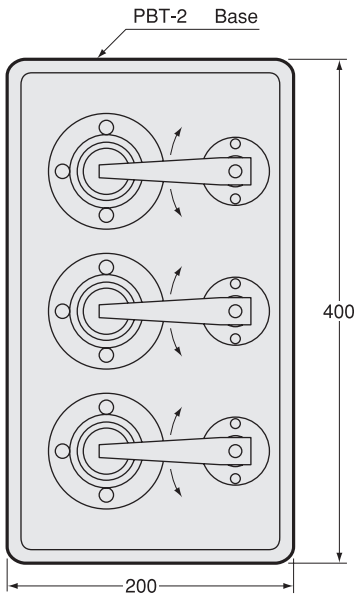

Gauge	Gauge stand	Holder support	Base
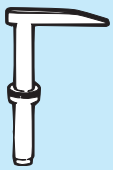 PG-1	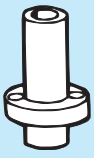 PS- ◌	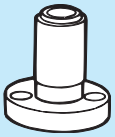 PH-WE ◌	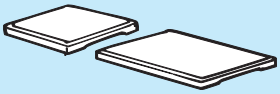 PBT-1 ◌ PBT-2 ◌

Ordering Example

SPW1 - WE1 - 127

Base PBT-1 | Holder Support | Gauge stand height L1

Code

0090 03 1 0 1 127

Gauge stand height L1

Base PBT-1 | Tap adapter size

Inch to Metric (mm) → Inch × 25.4
Metric (mm) to Inch → Metric ÷ 25.4 or Metric × 0.03937

Special / Custom Sizes on request

Guage PG

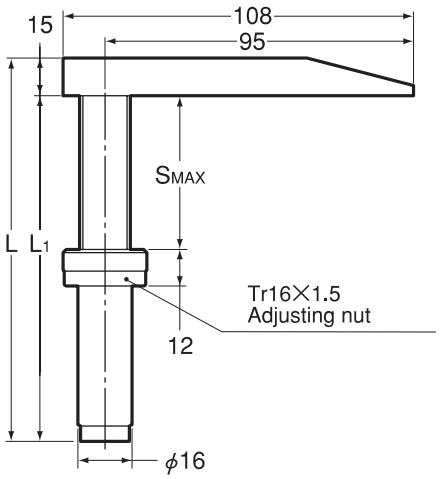

Code	Model	L	L1	SMAX	kg
0091 06000001	**PG-1**	128	113	50	0.4

Guage stand PS

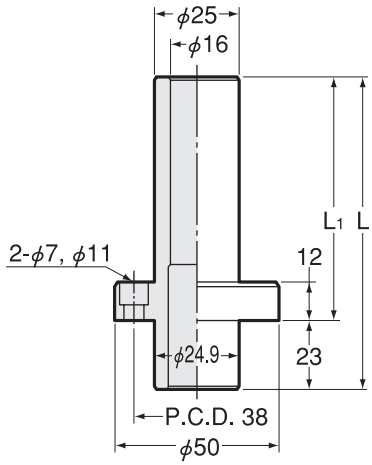

Code	Model	L	L1
0091 01000001	**PS -1**	100	77
0091 01000002	**PS -2**	150	127
0091 01000003	**PS -3**	200	177
0091 01000004	**PS -4**	250	227
0091 01000005	**PS -5**	300	277

Holder support PH-WE

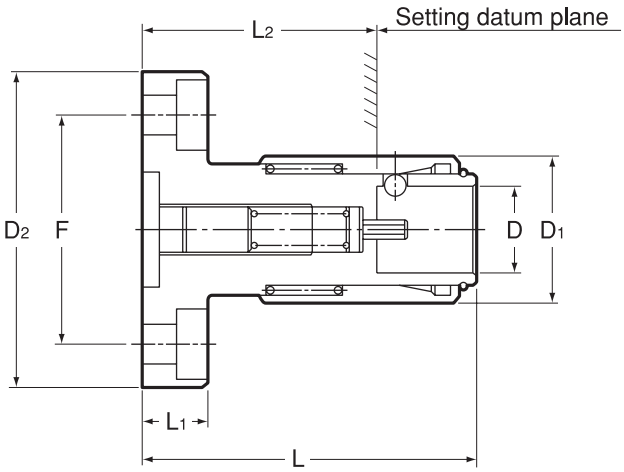

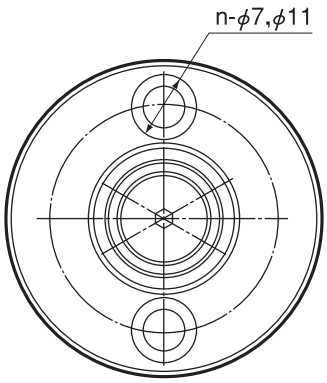

Code	Model	D	D1	D2	L	L1	L2	F	n	kg
0091 04000000	**PH -WE0**	13.5	23	50	50	12	35	36	2	0.3
0091 04000001	**PH -WE1**	19.5	32	60	56	12	40	45	2	0.5
0091 04000040	**PH -WE40**	26.5	40	65	70	12	45	51	4	
0091 04000002	**PH -WE2**	31.5	50	76	72	12	45	62	4	1.0
0091 04000003	**PH -WE3**	48.5	72	100	105	12	60	83	4	
0091 04000004	**PH -WE4**	60.5	92	120	114	12	65	105	4	

Base PBT

TYPE1

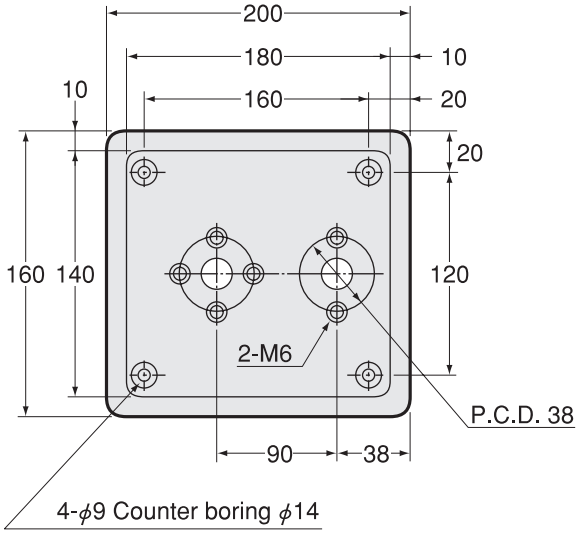

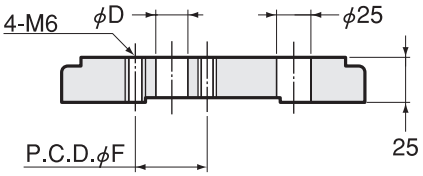

TYPE2

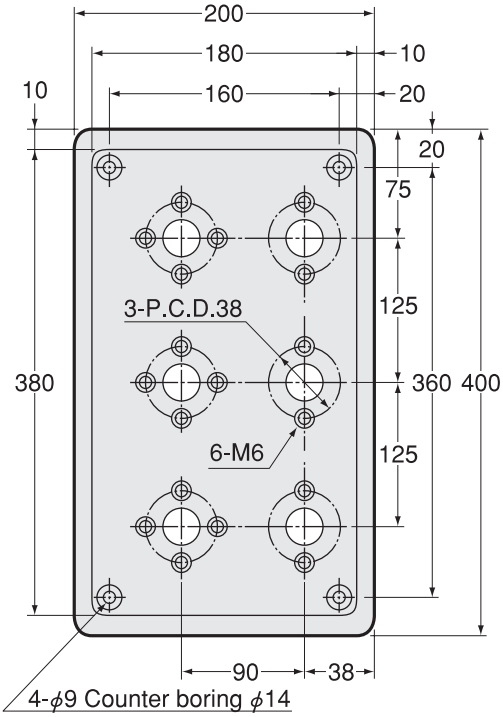

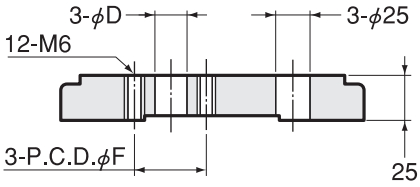

Code	Model	Type	φF	φD	Holder support	Gauge stand
0091 07200136	**PBT -1-36**	1	36	17	PH-WE0	PS-1 ~ PS-5
0091 07200236	**PBT -2-36**	2	36	17	PH-WE0	PS-1 ~ PS-5
0091 07200145	**PBT -1-45**	1	45	23	PH-WE1	PS-1 ~ PS-5
0091 07200245	**PBT -2-45**	2	45	23	PH-WE1	PS-1 ~ PS-5
0091 07200151	**PBT -1-51**	1	51	31	PH-WE40	PS-1 ~ PS-5
0091 07200251	**PBT -2-51**	2	51	31	PH-WE40	PS-1 ~ PS-5
0091 07200162	**PBT -1-62**	1	62	37	PH-WE2	PS-1 ~ PS-5
0091 07200262	**PBT -2-62**	2	62	37	PH-WE2	PS-1 ~ PS-5
0091 07200183	**PBT -1-83**	1	83	56	PH-WE3	PS-1 ~ PS-5
0091 07200283	**PBT -2-83**	2	83	56	PH-WE3	PS-1 ~ PS-5
0091 07201105	**PBT -1-105**	1	105	68	PH-WE4	PS-1 ~ PS-5
0091 07202105	**PBT -2-105**	2	105	68	PH-WE4	PS-1 ~ PS-5

Inch to Metric (mm) → Inch × 25.4
Metric (mm) to Inch → Metric ÷ 25.4 or Metric × 0.03937

Special / Custom Sizes on request

SPK-STC

Simple Setter For STC

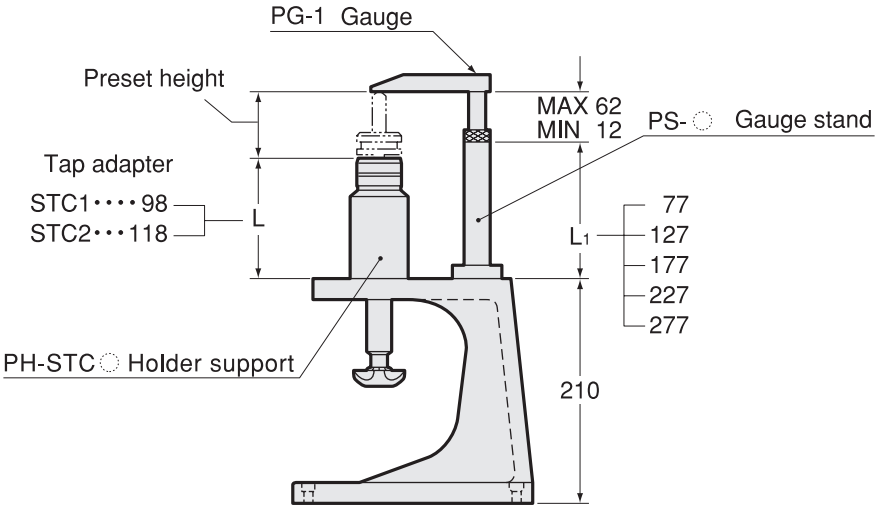

SPK1

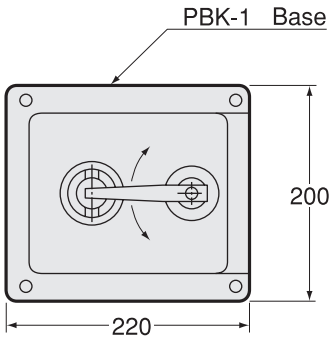

SPK2

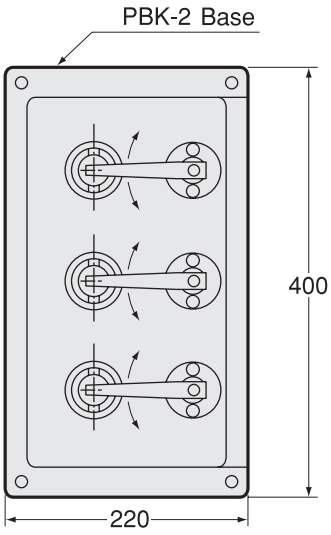

Gauge	Gauge stand	Holder support	Base
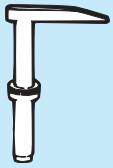 PG-1	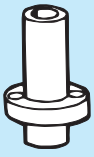 PS-◌	 PH-STC◌	 PBK-1◌ 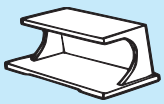 PBK-2◌

Ordering Example

SPK1 - STC1 - 77

Base PBK-1 | Holder Support | Gauge stand height L1

Code

0090 13 1 01 077

Gauge stand height L1

Base PBK-1 | Holder Support

Inch to Metric (mm) → Inch × 25.4
Metric (mm) to Inch → Metric ÷ 25.4 or Metric × 0.03937

Special / Custom Sizes on request

PG
Guage

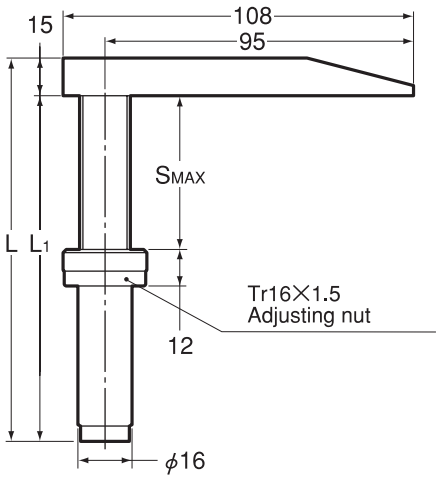

Code	Model	L	L1	SMAX	kg
0091 06000001	**PG-1**	128	113	50	0.4

PS
Guage stand

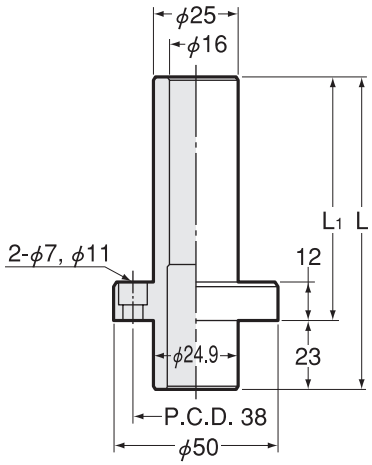

Code	Model	L	L1
0091 01000001	**PS -1**	100	77
0091 01000002	**PS -2**	150	127
0091 01000003	**PS -3**	200	177
0091 01000004	**PS -4**	250	227
0091 01000005	**PS -5**	300	277

Holder support PH-STC

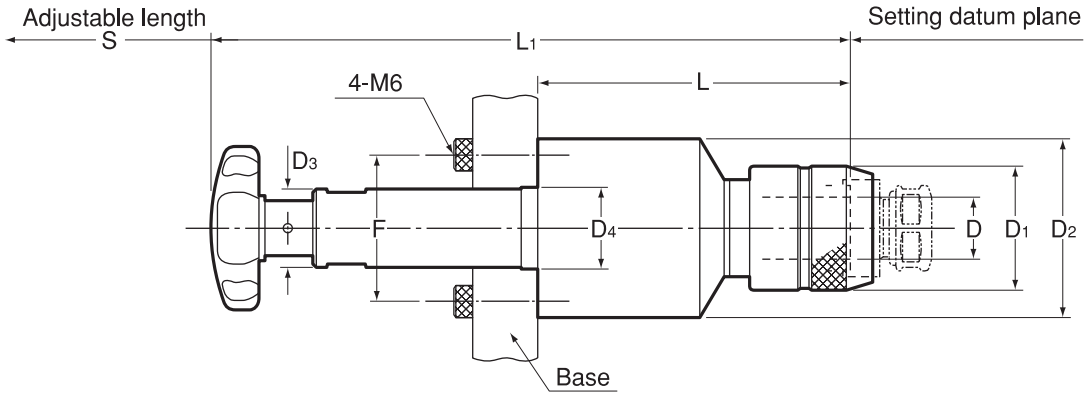

Code	Model	D	D1	D2	D3	D4	L	L1	F	S	kg
0091 14000001	**PH -STC1**	19	38	55	24	25	98	200.5	45	45	1.5
0091 14000002	**PH -STC2**	31	55	55	24	25	118	220.5	45	45	1.9

Inch to Metric (mm) → Inch × 25.4
Metric (mm) to Inch → Metric ÷ 25.4 or Metric × 0.03937

Special / Custom Sizes on request

Base PBK

TYPE1

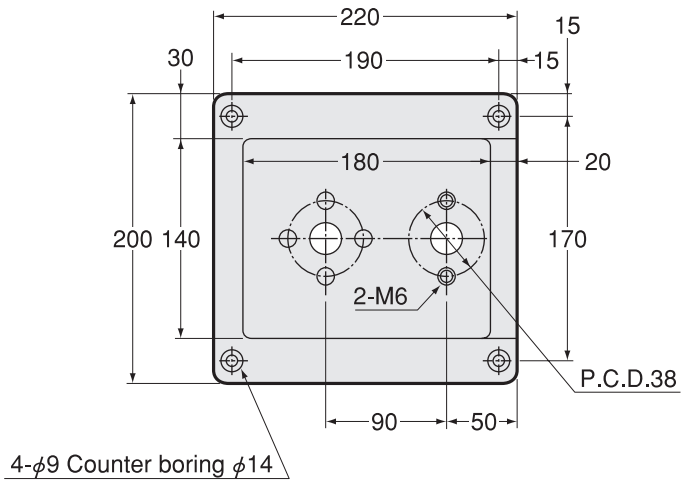

TYPE2

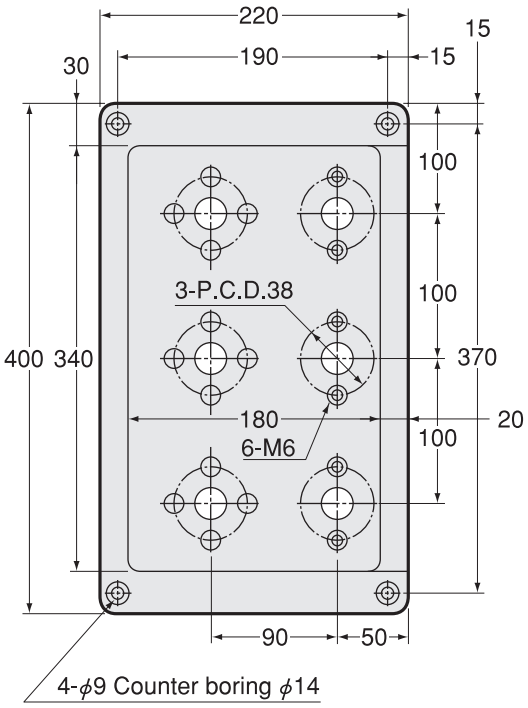

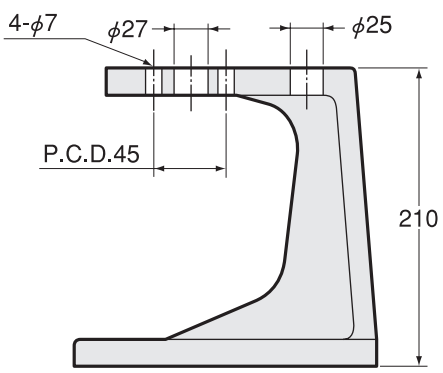

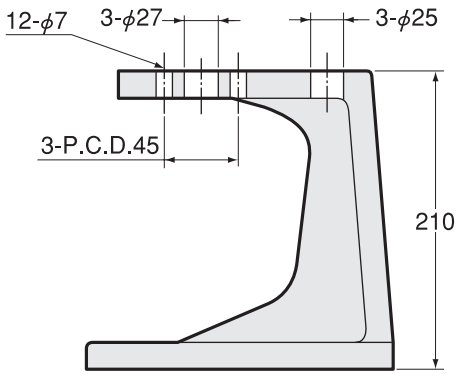

Code	Model	Type	Holder support	Gauge stand
0091 07100145	**PBK -1-45**	1	PH-STC1, PH-STC2	PS-1 ~ PS-5
0091 07100245	**PBK -2-45**	2	PH-STC1, PH-STC2	PS-1 ~ PS-5

SPT

Simple Setter For Tr Shank

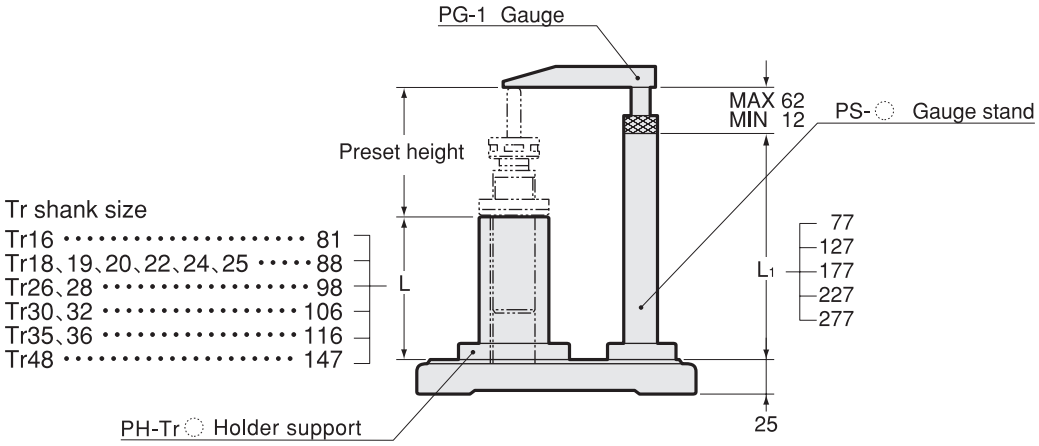

SPT1

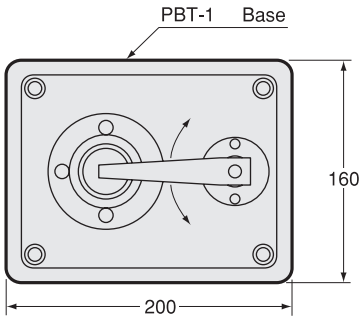

SPT2

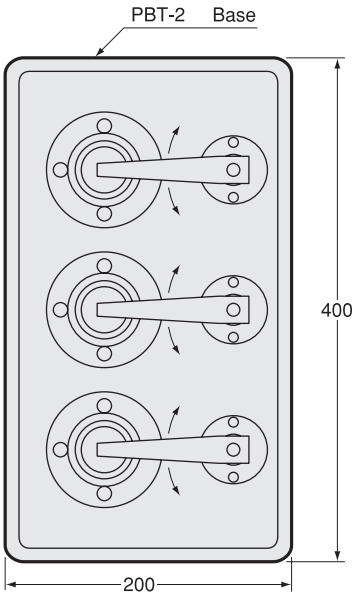

Gauge	Gauge stand	Holder support	Base
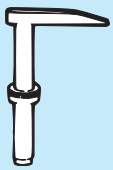 PG-1	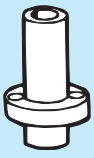 PS-◌	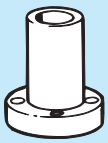 PH-Tr◌	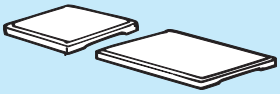 PBT-1◌ PBT-2◌

Ordering Example

SPT1 - Tr16X5 - 77

Base PBT-1 | Holder Support | Gauge stand height L1

Code

0090 4 1 16 5 077

Base PBT-1 | Key width 5 | Tr-16 | Gauge stand height L1

Inch to Metric (mm) → Inch × 25.4
Metric (mm) to Inch → Metric ÷ 25.4 or Metric × 0.03937

Special / Custom Sizes on request

Guage PG

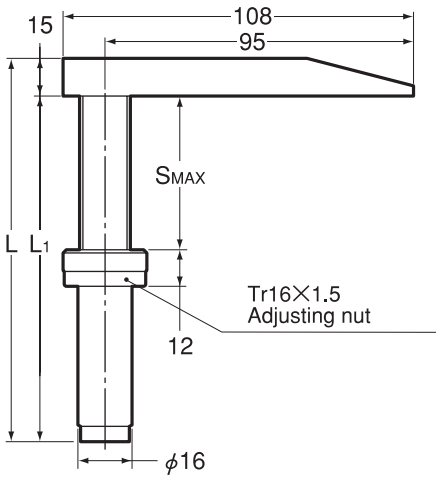

Code	Model	L	L1	SMAX	kg
0091 06000001	**PG-1**	128	113	50	0.4

Guage stand PS

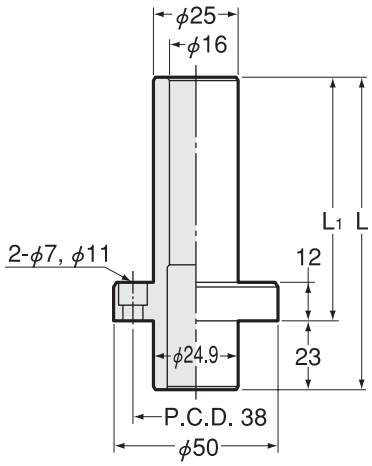

Code	Model	L	L1
0091 01000001	**PS -1**	100	77
0091 01000002	**PS -2**	150	127
0091 01000003	**PS -3**	200	177
0091 01000004	**PS -4**	250	227
0091 01000005	**PS -5**	300	277

Holder support PH-Tr

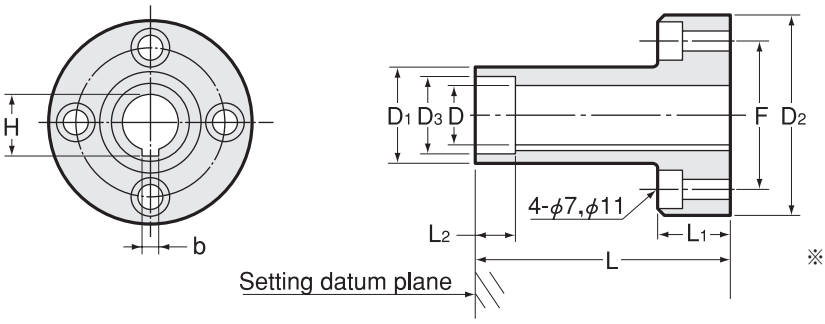

※ PH-Tr22x5 have Tr nut type and SSMA nut type respectively.
Please specify when you place an order.

Code	Model	D	D1	D2	D3	L	L1	L2	F	b	H
0091 05000163	**PH -Tr16×3**	16	24	50	20.5	81	20	10.5	36	3	17.5
0091 05000164	**PH -Tr16×4**	16	24	50	20.5	81	20	10.5	36	4	17.7
0091 05000165	**PH -Tr16×5**	16	24	50	20.5	81	20	10.5	36	5	17.5
0091 05000184	**PH -Tr18×4**	18	32	60	22.5	88	20	12	45	4	20
0091 05000195	**PH -Tr19×5**	19	32	60	26	88	20	12	45	5	21.5
0091 05000205	**PH -Tr20×5**	20	32	60	26	88	20	13	45	5	22.5
0091 05000225	**PH -Tr22×5**	22	33	60	(29.5)	88	20	13	45	5	24.5
0091 05000245	**PH -Tr24×5**	24	38	65	32.5	88	20	13	51	5	26.5
0091 05000256	**PH -Tr25×6**	25	38	65	32.5	88	20	13	51	6	27
0091 05000265	**PH -Tr26×5**	26	39	65	34.5	98	20	13	51	5	28.5
0091 05000267	**PH -Tr26×7**	26	39	65	34.5	98	20	13	51	7	29.5
0091 05000285	**PH -Tr28×5**	28	39	65	34.5	98	20	13	51	5	30.5
0091 05000286	**PH -Tr28×6**	28	39	65	34.5	98	20	13	51	6	30
0091 05000307	**PH -Tr30×7**	30	50	76	44	106	20	17	62	7	33.5
0091 05000326	**PH -Tr32×6**	32	50	76	38.5	106	20	14.5	62	6	35
0091 05000328	**PH -Tr32×8**	32	50	76	38.5	106	20	14.5	62	8	34
0091 05000356	**PH -Tr35×6**	35	50	76	44	116	20	17	62	6	37
0091 05000357	**PH -Tr35×7**	35	50	76	44	116	20	17	62	7	38.5
0091 05000368	**PH -Tr36×8**	36	50	76	44	116	20	17	62	8	38
0091 05003610	**PH -Tr36×10**	36	50	76	44	116	20	17	62	10	40
0091 05000487	**PH -Tr48×7**	48	67	100	58.5	147	20	21	83	7	51.5
0091 05000488	**PH -Tr48×8**	48	67	100	58.5	147	20	21	83	8	50.5
0091 05004810	**PH -Tr48×10**	48	67	100	58.5	147	20	21	83	10	50.5
0091 05004812	**PH -Tr48×12**	48	67	100	58.5	147	20	21	83	12	52

Inch to Metric (mm) → Inch × 25.4
Metric (mm) to Inch → Metric ÷ 25.4 or Metric × 0.03937

Special / Custom Sizes on request

Base PBT

TYPE1

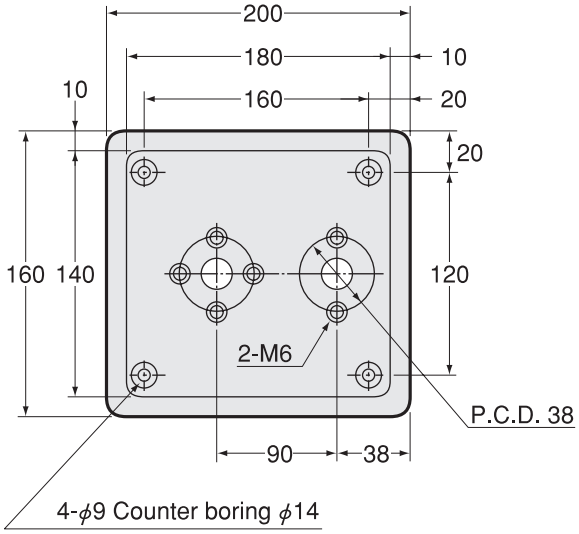

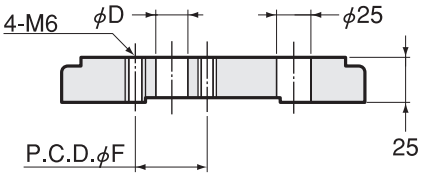

TYPE2

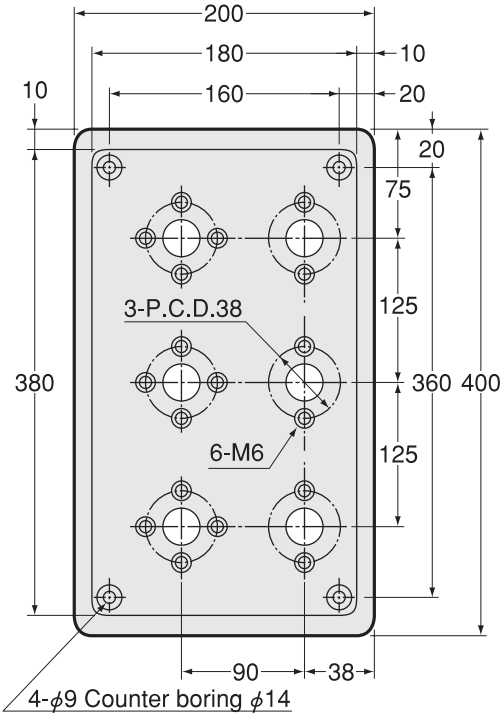

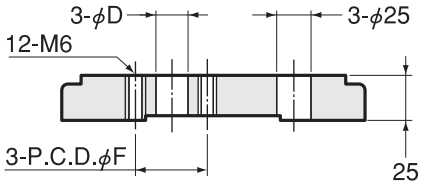

Code	Model	Type	φF	φD	Holder support	Gauge stand
0091 07200136	**PBT -1-36**	1	36	17	PH-Tr16	PS-1 ~ PS-5
0091 07200236	**PBT -2-36**	2	36	17	PH-Tr16	PS-1 ~ PS-5
0091 07200145	**PBT -1-45**	1	45	23	PH-Tr18 ~ 22	PS-1 ~ PS-5
0091 07200245	**PBT -2-45**	2	45	23	PH-Tr18 ~ 22	PS-1 ~ PS-5
0091 07200151	**PBT -1-51**	1	51	31	PH-Tr24 ~ 28	PS-1 ~ PS-5
0091 07200251	**PBT -2-51**	2	51	31	PH-Tr24 ~ 28	PS-1 ~ PS-5
0091 07200162	**PBT -1-62**	1	62	37	PH-Tr30 ~ 36	PS-1 ~ PS-5
0091 07200262	**PBT -2-62**	2	62	37	PH-Tr30 ~ 36	PS-1 ~ PS-5
0091 07200183	**PBT -1-83**	1	83	56	PH-Tr48	PS-1 ~ PS-5
0091 07200283	**PBT -2-83**	2	83	56	PH-Tr48	PS-1 ~ PS-5

Inch to Metric (mm) → Inch × 25.4
Metric (mm) to Inch → Metric ÷ 25.4 or Metric × 0.03937

Special / Custom Sizes on request

BUSHING AND CHAMFERING DRILL

Drill Jig Bushing

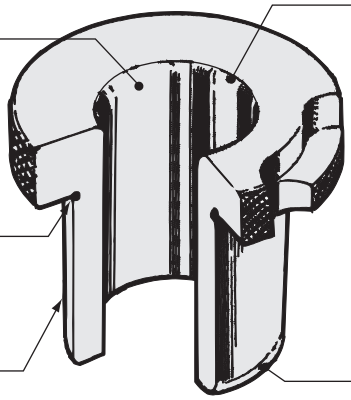

I.D.
Bushings are made in 3 different types for precise drilling, drilling and reaming. Available in increments of 0.1 mm according to size of drill or reamer.

UNDERCUT
Two-way undercut allows bushings to fit flush on top of jig.

O.D.
Highly precise finish based on I.D.

RADIUS
Blended and polished for smooth entry of cutting tool.

HARDNESS
H.R.C60° ~ 64°for long wear free.

MATERIAL
JIS SK-5 or selected steel.

CHAMFERS
Chamfers on Bushings permit easy insertion.

Type	PRESS FIT BUSHING		RENEWABLE BUSHING
Designation	HEADLESS Type A	HEADED Type B	ROUND Type C
Tool applied / Shape and sequence of fitting-in / Sectional view	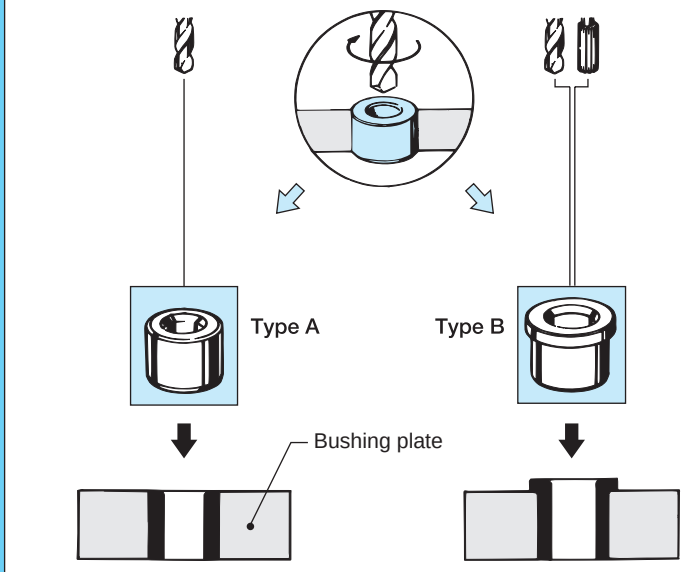		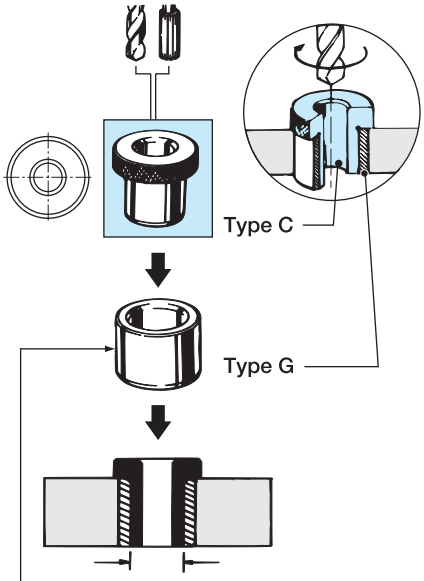

Bushings that have the same O.D. are interchangeable with each other.

HOW TO INSTALL A JIG BUSHING

PRESS FIT BUSHING Type A, B, G	RENEWABLE BUSHING Type C, D, E, F
How to press-fit 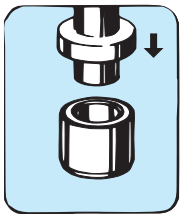	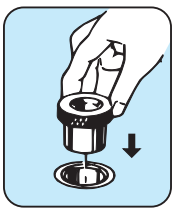
Press the bushing correctly into the bush plate.	Renewable bushing can be inserted by hand.

LINER BUSHING Type G

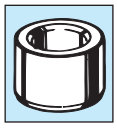

This Guides the renewable bushing for smoothe insertion or replacement.

Inch to Metric (mm) → Inch × 25.4
Metric (mm) to Inch → Metric ÷ 25.4 or Metric × 0.03937

Special / Custom Sizes on request

Name	Press fit bushing		Renewable bushing				Headless liner bushing	Lock screw	Round clamp
	Headless	Headed	Round	Right slip	Left slip	Fixed			
Shape	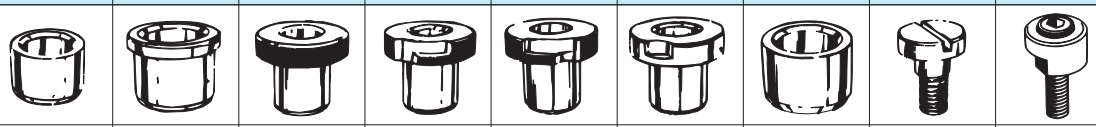								
Higher accuracy	SA	SB	SC	SD	SE	SF	G	T	R
Standard accuracy	A	B	C	D	E	F			
Reaming	—	BR	CR	DR	ER	FR			

S···for higher accuracy R···for reaming

RENEWABLE BUSHING

(R)SLIP RENEWABLE Type D

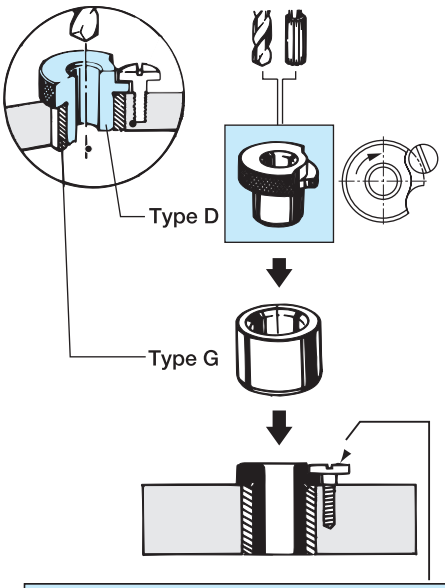

(L)SLIP RENEWABLE Type E

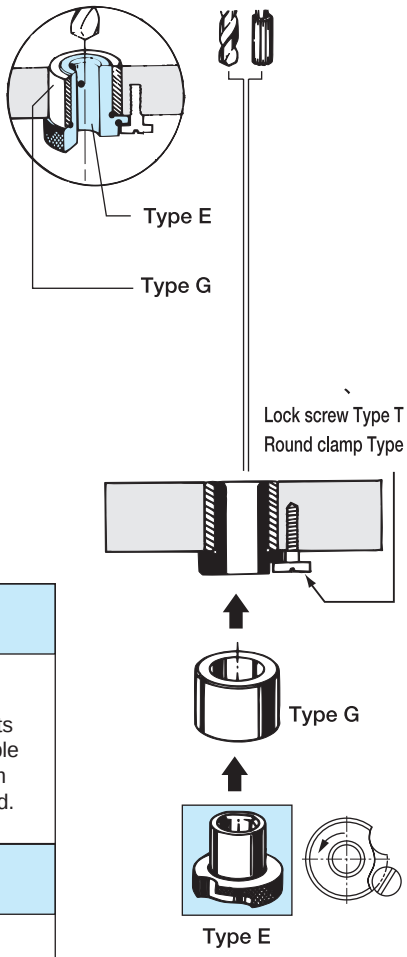

FIXED RENEWABLE Type F

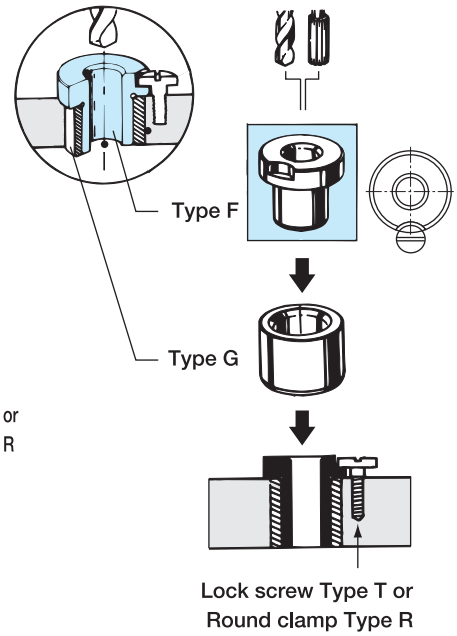

LOCK SCREW Type T

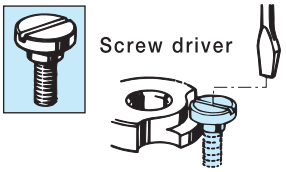

This Prevents slip renewable bushing from turning round.

ROUND CLAMP Type R

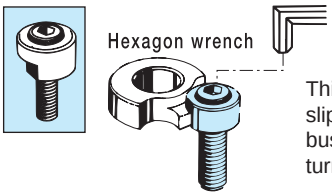

This Prevents slip renewable bushing from turning round.

Type A

Headless Press Fit Bushing Type A

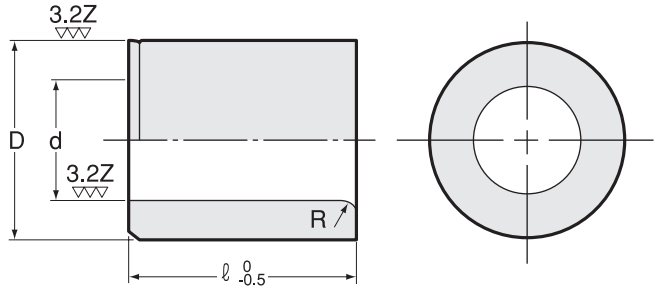

Example

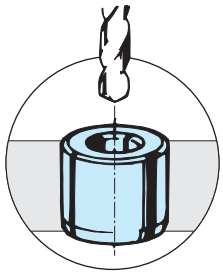

※ 1.Bushing with I.D. size smaller than 3.0mm uses 30 degreed chamfered radius (R).

Tolerance of I.D.

d	0.8 ~ 1.5	1.6 ~ 3.0	3.1 ~ 6.0	6.1 ~ 10.0	10.1 ~ 18.0	18.1 ~ 30.0	30.1 ~ 50.0	50.1 ~ 55.0
SA（G6）	–	+0.008 +0.002	+0.012 +0.004	+0.014 +0.005	+0.017 +0.006	+0.020 +0.007	+0.025 +0.009	+0.029 +0.010
A	+0.025 +0.002	+0.025 +0.002	+0.030 +0.004	+0.036 +0.005	+0.043 +0.006	+0.052 +0.007	+0.062 +0.009	+0.074 +0.010

Concentric runout (T.I.R.) of O.D.to I.D.

d	0.8 ~ 1.5	1.6 ~ 18.0	18.1 ~ 50.0	50.1 ~ 55.0
SA	–	0.005 or less	0.008 or less	0.010 or less
A	0.012 or less	0.012 or less	0.020 or less	0.025 or less

1.Renewable bushing cannot be used together with headless press fit bushing, which can be used only with headless liner bushing (Type G).
2.Bore a hole in bushing plate at H7 for bushing with O.D. (D) p6.Tolerance of hole bored by reamer with O.D. m5 is H7.

I.D.(d) of hole in bushing plate	0.8 ~ 3.0	3.1 ~ 6.0	6.1 ~ 10.0	10.1 ~ 18.0	18.1 ~ 30.0	30.1 ~ 50.0	50.1 ~ 55.0
Tolerance H7	+0.010 0	+0.012 0	+0.015 0	+0.018 0	+0.021 0	+0.025 0	+0.030 0

Inch to Metric (mm) → Inch × 25.4
Metric (mm) to Inch → Metric ÷ 25.4 or Metric × 0.03937

Special / Custom Sizes on request

SA····· For higher accuracy
A····· For standard accuracy

d	D (p6)	R	Grade	ℓ										
				6	8	10	12	16	20	25	30	35	45	55
0.8 ~ 1.0	3 +0.012 +0.006	※1												
			A	○	○									
1.1 ~ 1.5	4 +0.020 +0.012	※1												
			A	○	○									
1.6 ~ 2.0	5 +0.020 +0.012	※1	SA		○	○	○							
			A		○	○	○							
2.1 ~ 3.0	7 +0.024 +0.015	※1	SA		○	○	○							
			A		○	○	○							
3.1 ~ 4.0	8 +0.024 +0.015	1	SA			○	○	○						
			A			○	○	○						
4.1 ~ 6.0	10 +0.024 +0.015	1	SA			○	○	○						
			A			○	○	○						
6.1 ~ 8.0	12 +0.029 +0.018	2	SA				○	○	○					
			A				○	○	○					
8.1 ~ 10.0	15 +0.029 +0.018	2	SA				○	○	○					
			A				○	○	○					
10.1 ~ 12.0	18 +0.029 +0.018	2	SA					○	○	○				
			A					○	○	○				
12.1 ~ 15.0	22 +0.035 +0.022	2	SA					○	○	○				
			A					○	○	○				
15.1 ~ 18.0	26 +0.035 +0.022	2	SA						○	○	○			
			A						○	○	○			
18.1 ~ 22.0	30 +0.035 +0.022	3	SA						○	○	○			
			A						○	○	○			
22.1 ~ 26.0	35 +0.042 +0.026	3	SA							○	○	○		
			A							○	○	○		
26.1 ~ 30.0	42 +0.042 +0.026	3	SA							○	○	○		
			A							○	○	○		
30.1 ~ 35.0	48 +0.042 +0.026	4	SA								○	○	○	
			A								○	○	○	
35.1 ~ 42.0	55 +0.051 +0.032	4	SA								○	○	○	
			A								○	○	○	
42.1 ~ 48.0	62 +0.051 +0.032	4	SA									○	○	○
			A									○	○	○
48.1 ~ 55.0	70 +0.051 +0.032	4	SA									○	○	○
			A									○	○	○

Ordering Example

SA - 6.0 × 10
d ℓ

Code

0000 012 060 12
Code (A:011, SA:012) d ℓ

Inch to Metric (mm) → Inch × 25.4
Metric (mm) to Inch → Metric ÷ 25.4 or Metric × 0.03937

Special / Custom Sizes on request

Type B

Headed Press Fit Bushing Type B

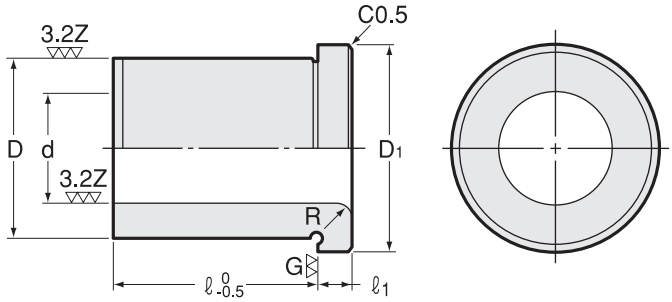

※ 1.Bushing with I.D. size smaller than 3.0mm uses 30 degreed chamfered radius (R).

Tolerance of I.D.

d	1.6 ~ 3.0	3.1 ~ 6.0	6.1 ~ 10.0	10.1 ~ 18.0	18.1 ~ 30.0	30.1 ~ 50.0	50.1 ~ 55.0
SB（G6）	+0.008 +0.002	+0.012 +0.004	+0.014 +0.005	+0.017 +0.006	+0.020 +0.007	+0.025 +0.009	+0.029 +0.010
B	+0.025 +0.002	+0.030 +0.004	+0.036 +0.005	+0.043 +0.006	+0.052 +0.007	+0.062 +0.009	+0.074 +0.010
BR	+0.014 +0.008	+0.020 +0.012	+0.024 +0.015	+0.029 +0.018	+0.034 +0.021	+0.041 +0.025	+0.049 +0.030

Concentric runout (T.I.R.) of O.D.to I.D.

d	1.6 ~ 18.0	18.1 ~ 50.0	50.1 ~ 55.0
SB/BR	0.005 or less	0.008 or less	0.010 or less
B	0.012 or less	0.020 or less	0.025 or less

1.Headed press fit bushing cannot be used together with renewable bushing, which can be used only with headless liner bushing (Type G).
2.Bore a hole in bushing plate at H7 for bushing with O.D. (D) p6.Tolerance of hole bored by reamer with O.D. m5 is H7.

I.D.(d) of hole in bushing plate	0.8 ~ 3.0	3.1 ~ 6.0	6.1 ~ 10.0	10.1 ~ 18.0	18.1 ~ 30.0	30.1 ~ 50.0	50.1 ~ 55.0
Tolerance H7	+0.010 0	+0.012 0	+0.015 0	+0.018 0	+0.021 0	+0.025 0	+0.030 0

Inch to Metric (mm) → Inch × 25.4
Metric (mm) to Inch → Metric ÷ 25.4 or Metric × 0.03937

Special / Custom Sizes on request

SB ····· For higher accuracy
B····· For standard accuracy
BR····· For reaming

d	D (p6)	D1	ℓ1	R	Grade	ℓ									
						8	10	12	16	20	25	30	35	45	55
1.6 ~ 2.0	5 +0.020 +0.012	9	2.5	※1	SB	○	○	○							
					B	○	○	○							
2.1 ~ 3.0	7 +0.024 +0.015	11	2.5	※1	SB	○	○	○							
					B	○	○	○							
3.1 ~ 4.0	8 +0.024 +0.015	12	3	1	SB		○	○	○						
					B		○	○	○						
4.1 ~ 6.0	10 +0.024 +0.015	14	3	1	SB		○	○	○						
					B		○	○	○						
6.1 ~ 8.0	12 +0.029 +0.018	16	4	2	SB			○	○	○					
					B			○	○	○					
8.1 ~ 10.0	15 +0.029 +0.018	19	4	2	SB			○	○	○					
					B			○	○	○					
10.1 ~ 12.0	18 +0.029 +0.018	22	4	2	SB				○	○	○				
					B				○	○	○				
12.1 ~ 15.0	22 +0.035 +0.022	26	5	2	SB				○	○	○				
					B				○	○	○				
15.1 ~ 18.0	26 +0.035 +0.022	30	5	2	SB					○	○	○			
					B					○	○	○			
18.1 ~ 22.0	30 +0.035 +0.022	35	6	3	SB					○	○	○			
					B					○	○	○			
22.1 ~ 26.0	35 +0.042 +0.026	40	6	3	SB						○	○	○		
					B						○	○	○		
26.1 ~ 30.0	42 +0.042 +0.026	47	6	3	SB						○	○	○		
					B						○	○	○		
30.1 ~ 35.0	48 +0.042 +0.026	55	8	4	SB							○	○	○	
					B							○	○	○	
35.1 ~ 42.0	55 +0.051 +0.032	62	8	4	SB							○	○	○	
					B							○	○	○	
42.1 ~ 48.0	62 +0.051 +0.032	69	8	4	SB								○	○	○
					B								○	○	○
48.1 ~ 55.0	70 +0.051 +0.032	77	8	4	SB								○	○	○
					B								○	○	○

List prices of type BR are identical to those of type SB.

Ordering Example

SB - 6.0 × 10
d ℓ

Code

0000 022 060 12
Code (B:021, SB:022, BR:023) d ℓ

Type C

Round Renewable Bushing Type C

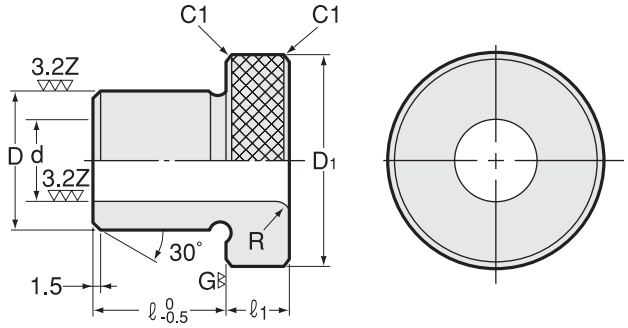

Example

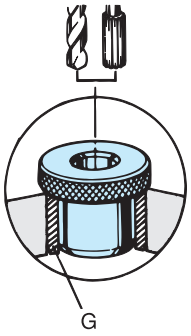

※ 1.Bushing with I.D. size smaller than 3.0mm uses 30 degreed chamfered radius (R).

Application

Round renewable bushing can be frequently used in following cases.

1.Hole size differs from one workpiece to another.

2.Drilling requires two or more different drills, or reaming is necessary after being drilled.

Tolerance of I.D.

d	1.6 ~ 3.0	3.1 ~ 6.0	6.1 ~ 10.0	10.1 ~ 18.0	18.1 ~ 30.0	30.1 ~ 42.0
SC（G6）	+0.008 +0.002	+0.012 +0.004	+0.014 +0.005	+0.017 +0.006	+0.020 +0.007	+0.025 +0.009
C	+0.025 +0.002	+0.030 +0.004	+0.036 +0.005	+0.043 +0.006	+0.052 +0.007	+0.062 +0.009
CR	+0.014 +0.008	+0.020 +0.012	+0.024 +0.015	+0.029 +0.018	+0.034 +0.021	+0.041 +0.025

Concentric runout (T.I.R.) of O.D.to I.D.

d	1.6 ~ 18.0	18.1 ~ 42.0
SC/CR	0.005 or less	0.008 or less
C	0.012 or less	0.020 or less

1.Round renewable bushing can be used in combination with headless liner bushing (Type G).

2.O.D.(D) of round renewable bushing must coincide with I.D.(d) of headless liner bushing.

Inch to Metric (mm) → Inch × 25.4
Metric (mm) to Inch → Metric ÷ 25.4 or Metric × 0.03937

Special / Custom Sizes on request

SC····· For higher accuracy
C····· For standard accuracy
CR····· For reaming

d	D (m5)	D1	ℓ1	R	Grade	ℓ						
						12	16	20	25	30	35	45
1.6 ～ 2.0	8 +0.012 +0.006	16	8	※1	SC	○						
					C	○						
2.1 ～ 3.0	8 +0.012 +0.006	16	8	※1	SC	○						
					C	○						
3.1 ～ 4.0	8 +0.012 +0.006	16	8	1	SC	○	○					
					C	○	○					
4.1 ～ 6.0	10 +0.012 +0.006	19	8	1	SC	○	○					
					C	○	○					
6.1 ～ 8.0	12 +0.015 +0.007	22	8	2	SC		○	○				
					C		○	○				
8.1 ～ 10.0	15 +0.015 +0.007	26	9	2	SC		○	○				
					C		○	○				
10.1 ～ 12.0	18 +0.015 +0.007	30	9	2	SC			○	○			
					C			○	○			
12.1 ～ 15.0	22 +0.017 +0.008	35	12	2	SC			○	○			
					C			○	○			
15.1 ～ 18.0	26 +0.017 +0.008	40	12	2	SC				○	○		
					C				○	○		
18.1 ～ 22.0	30 +0.017 +0.008	47	12	3	SC				○	○		
					C				○	○		
22.1 ～ 26.0	35 +0.020 +0.009	55	15	3	SC					○	○	
					C					○	○	
26.1 ～ 30.0	42 +0.020 +0.009	62	15	3	SC					○	○	
					C					○	○	
30.1 ～ 35.0	48 +0.020 +0.009	69	15	4	SC						○	○
					C						○	○
35.1 ～ 42.0	55 +0.024 +0.011	77	15	4	SC						○	○
					C						○	○

List prices of type CR are identical to those of type SC.

Ordering Example

SC - 6.0 × 12
d ℓ

Code

0000 032 060 12
Code (C:031, SC:032, CR:033) d ℓ

Type D

Right Slip Renewable Bushing Type D

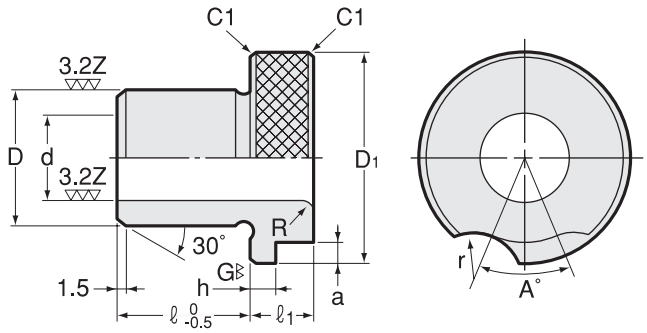

※ 1.Bushing with I.D. size smaller than 3.0mm uses 30 degreed chamfered radius (R).

Example

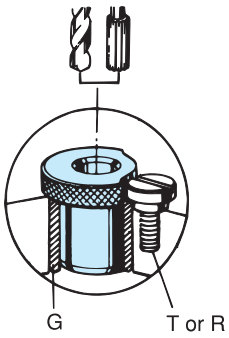

Application

Right slip renewable bushing can be frequently used in the following cases.

1.Same products are made in quantity for long period.
2.Hole size differs from one workpiece to another.
3.Drilling requires two or more different drills, or reaming is necessary after being drilled.

Tolerance of I.D.

d	1.6 ~ 3.0	3.1 ~ 6.0	6.1 ~ 10.0	10.1 ~ 18.0	18.1 ~ 30.0	30.1 ~ 42.0
SD（G6）	+0.008 +0.002	+0.012 +0.004	+0.014 +0.005	+0.017 +0.006	+0.020 +0.007	+0.025 +0.009
D	+0.025 +0.002	+0.030 +0.004	+0.036 +0.005	+0.043 +0.006	+0.052 +0.007	+0.062 +0.009
DR	+0.014 +0.008	+0.020 +0.012	+0.024 +0.015	+0.029 +0.018	+0.034 +0.021	+0.041 +0.025

Concentric runout (T.I.R.) of O.D.to I.D.

d	1.6 ~ 18.0	18.1 ~ 42.0
SD/DR	0.005 or less	0.008 or less
D	0.012 or less	0.020 or less

1.Right slip renewable bushing must be used in combination with headless liner bushing (Type G).
2.O.D.(D) of right slip renewable bushing must coincide with I.D.(d) of headless liner bushing.
3.Bushing is held in place by a lock screw or a round clamp fitted into a milled recess in the head of bushing.

Inch to Metric (mm) → Inch × 25.4
Metric (mm) to Inch → Metric ÷ 25.4 or Metric × 0.03937

Special / Custom Sizes on request

SD····· For higher accuracy
D····· For standard accuracy
DR····· For reaming

d	D (m5)		D1	ℓ1	h	a	R	A°	r	Lock screw Round clamp	Grade	ℓ						
												12	16	20	25	30	35	45
1.6 ~ 2.0	8	+0.012 +0.006	16	8	3.5	3	※1	60	7	T-5	SD	○						
										R-5	D	○						
2.1 ~ 3.0	8	+0.012 +0.006	16	8	3.5	3	※1	60	7	T-5	SD	○						
										R-5	D	○						
3.1 ~ 4.0	8	+0.012 +0.006	16	8	3.5	3	1	60	7	T-5	SD	○	○					
										R-5	D	○	○					
4.1 ~ 6.0	10	+0.012 +0.006	19	8	3.5	3	1	60	7	T-5	SD	○	○					
										R-5	D	○	○					
6.1 ~ 8.0	12	+0.015 +0.007	22	8	3.5	3	2	60	7	T-5	SD		○	○				
										R-5	D		○	○				
8.1 ~ 10.0	15	+0.015 +0.007	26	9	3.5	3	2	60	7	T-5	SD		○	○				
										R-5	D		○	○				
10.1 ~ 12.0	18	+0.015 +0.007	30	9	3.5	3	2	45	7	T-5	SD			○	○			
										R-5	D			○	○			
12.1 ~ 15.0	22	+0.017 +0.008	35	12	5	4	2	45	9	T-6	SD			○	○			
										R-6	D			○	○			
15.1 ~ 18.0	26	+0.017 +0.008	40	12	5	4	2	45	9	T-6	SD				○	○		
										R-6	D				○	○		
18.1 ~ 22.0	30	+0.017 +0.008	47	12	5	4	3	40	9	T-6	SD				○	○		
										R-6	D				○	○		
22.1 ~ 26.0	35	+0.020 +0.009	55	15	6	5	3	40	10	T-8	SD					○	○	
										R-8	D					○	○	
26.1 ~ 30.0	42	+0.020 +0.009	62	15	6	5	3	35	10	T-8	SD					○	○	
										R-8	D					○	○	
30.1 ~ 35.0	48	+0.020 +0.009	69	15	6	5	4	35	10	T-8	SD						○	○
										R-8	D						○	○
35.1 ~ 42.0	55	+0.024 +0.011	77	15	6	5	4	35	10	T-8	SD						○	○
										R-8	D						○	○

List prices of type DR are identical to those of type SD.

Ordering Example

SD - 6.0 × 12
d ℓ

Code

0000 042 060 12
Code (D:041, SD:042, DR:043) d ℓ

Inch to Metric (mm) → Inch × 25.4
Metric (mm) to Inch → Metric ÷ 25.4 or Metric × 0.03937

Special / Custom Sizes on request

Type E

Left Slip Renewable Bushing Type E

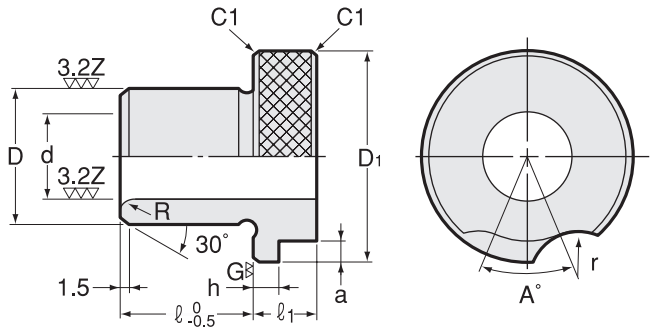

※ 1.Bushing with I.D. size smaller than 3.0mm uses 30 degreed chamfered radius (R).

Example

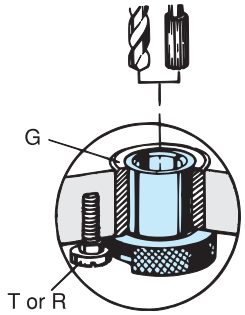

Application

Left slip renewable bushing can be frequently used in the following cases.

1.Same products are made in quantity for long period.
2.Hole size differs from one workpiece to another.
3.Drilling requires two or more different drills, or reaming is necessary after being drilled.

Tolerance of I.D.

d	1.6 ~ 3.0	3.1 ~ 6.0	6.1 ~ 10.0	10.1 ~ 18.0	18.1 ~ 30.0	30.1 ~ 42.0
SE（G6）	+0.008 +0.002	+0.012 +0.004	+0.014 +0.005	+0.017 +0.006	+0.020 +0.007	+0.025 +0.009
E	+0.025 +0.002	+0.030 +0.004	+0.036 +0.005	+0.043 +0.006	+0.052 +0.007	+0.062 +0.009
ER	+0.014 +0.008	+0.020 +0.012	+0.024 +0.015	+0.029 +0.018	+0.034 +0.021	+0.041 +0.025

Concentric runout (T.I.R.) of O.D.to I.D.

d	1.6 ~ 18.0	18.1 ~ 42.0
SE/ER	0.005 or less	0.008 or less
E	0.012 or less	0.020 or less

1.Left slip renewable bushing must be used in combination with headless liner bushing (Type G).
2.O.D.(D) of left slip renewable bushing must coincide with I.D.(d) of headless liner bushing.
3.Bushing is held in place by a lock screw or a round clamp fitted into a milled recess in the head of bushing.

Inch to Metric (mm) → Inch × 25.4
Metric (mm) to Inch → Metric ÷ 25.4 or Metric × 0.03937

Special / Custom Sizes on request

SE·····For higher accuracy
E·····For standard accuracy
ER·····For reaming

d	D (m5)	D1	ℓ1	h	a	R	A°	r	Lock screw Round clamp	Grade	ℓ						
											12	16	20	25	30	35	45
1.6 ~ 2.0	8 +0.012 +0.006	16	8	3.5	3	※1	60	7	T-5	SE	○						
									R-5	E	○						
2.1 ~ 3.0	8 +0.012 +0.006	16	8	3.5	3	※1	60	7	T-5	SE	○						
									R-5	E	○						
3.1 ~ 4.0	8 +0.012 +0.006	16	8	3.5	3	1	60	7	T-5	SE	○	○					
									R-5	E	○	○					
4.1 ~ 6.0	10 +0.012 +0.006	19	8	3.5	3	1	60	7	T-5	SE	○	○					
									R-5	E	○	○					
6.1 ~ 8.0	12 +0.015 +0.007	22	8	3.5	3	2	60	7	T-5	SE		○	○				
									R-5	E		○	○				
8.1 ~ 10.0	15 +0.015 +0.007	26	9	3.5	3	2	60	7	T-5	SE		○	○				
									R-5	E		○	○				
10.1 ~ 12.0	18 +0.015 +0.007	30	9	3.5	3	2	45	7	T-5	SE			○	○			
									R-5	E			○	○			
12.1 ~ 15.0	22 +0.017 +0.008	35	12	5	4	2	45	9	T-6	SE			○	○			
									R-6	E			○	○			
15.1 ~ 18.0	26 +0.017 +0.008	40	12	5	4	2	45	9	T-6	SE				○	○		
									R-6	E				○	○		
18.1 ~ 22.0	30 +0.017 +0.008	47	12	5	4	3	40	9	T-6	SE				○	○		
									R-6	E				○	○		
22.1 ~ 26.0	35 +0.020 +0.009	55	15	6	5	3	40	10	T-8	SE					○	○	
									R-8	E					○	○	
26.1 ~ 30.0	42 +0.020 +0.009	62	15	6	5	3	35	10	T-8	SE					○	○	
									R-8	E					○	○	
30.1 ~ 35.0	48 +0.020 +0.009	69	15	6	5	4	35	10	T-8	SE						○	○
									R-8	E						○	○
35.1 ~ 42.0	55 +0.024 +0.011	77	15	6	5	4	35	10	T-8	SE						○	○
									R-8	E						○	○

List prices of type ER are identical to those of type SE.

Ordering Example

SE - 6.0 × 12
d ℓ

Code

0000 052 060 12
Code (E:051, SE:052, ER:053) d ℓ

Type F

Fixed Renewable Bushing Type F

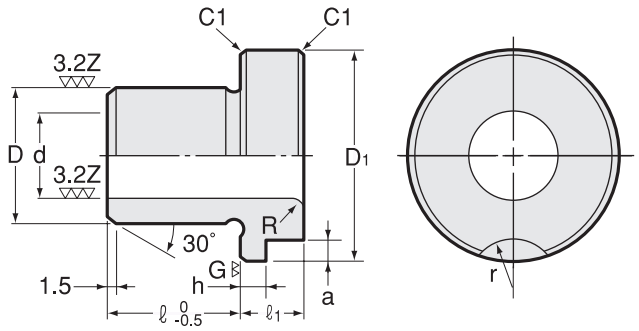

※ 1.Bushing with I.D. size smaller than 3.0mm uses 30 degreed chamfered radius (R).

Example

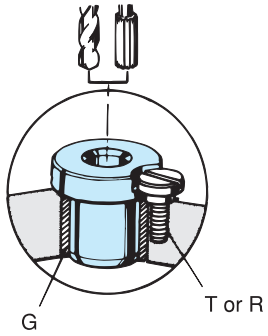

Application

Fixed renewable bushing can be used continuously when products are made in high volume.

Tolerance of I.D.

d	1.6 ~ 3.0	3.1 ~ 6.0	6.1 ~ 10.0	10.1 ~ 18.0	18.1 ~ 30.0	30.1 ~ 42.0
SF（G6）	+0.008 +0.002	+0.012 +0.004	+0.014 +0.005	+0.017 +0.006	+0.020 +0.007	+0.025 +0.009
F	+0.025 +0.002	+0.030 +0.004	+0.036 +0.005	+0.043 +0.006	+0.052 +0.007	+0.062 +0.009
FR	+0.014 +0.008	+0.020 +0.012	+0.024 +0.015	+0.029 +0.018	+0.034 +0.021	+0.041 +0.025

Concentric runout (T.I.R.) of O.D.to I.D.

d	1.6 ~ 18.0	18.1 ~ 42.0
SF/FR	0.005 or less	0.008 or less
F	0.012 or less	0.020 or less

1.Fixed renewable bushing must be used in combination with headless liner bushing (Type G).
2.O.D.(D) of fixed renewable bushing must coincide with I.D.(d) of headless liner bushing.

Inch to Metric (mm) → Inch × 25.4
Metric (mm) to Inch → Metric ÷ 25.4 or Metric × 0.03937

Special / Custom Sizes on request

SF·····For higher accuracy
F·····For standard accuracy
FR·····For reaming

d	D (m5)		D1	ℓ1	h	a	R	r	Lock screw Round clamp	Grade	ℓ						
											12	16	20	25	30	35	45
1.6 ~ 2.0	8	+0.012 +0.006	16	8	3.5	3	※1	7	T-5	SF	○						
									R-5	F	○						
2.1 ~ 3.0	8	+0.012 +0.006	16	8	3.5	3	※1	7	T-5	SF	○						
									R-5	F	○						
3.1 ~ 4.0	8	+0.012 +0.006	16	8	3.5	3	1	7	T-5	SF	○	○					
									R-5	F	○	○					
4.1 ~ 6.0	10	+0.012 +0.006	19	8	3.5	3	1	7	T-5	SF	○	○					
									R-5	F	○	○					
6.1 ~ 8.0	12	+0.015 +0.007	22	8	3.5	3	2	7	T-5	SF		○	○				
									R-5	F		○	○				
8.1 ~ 10.0	15	+0.015 +0.007	26	9	3.5	3	2	7	T-5	SF		○	○				
									R-5	F		○	○				
10.1 ~ 12.0	18	+0.015 +0.007	30	9	3.5	3	2	7	T-5	SF			○	○			
									R-5	F			○	○			
12.1 ~ 15.0	22	+0.017 +0.008	35	12	5	4	2	9	T-6	SF			○	○			
									R-6	F			○	○			
15.1 ~ 18.0	26	+0.017 +0.008	40	12	5	4	2	9	T-6	SF				○	○		
									R-6	F				○	○		
18.1 ~ 22.0	30	+0.017 +0.008	47	12	5	4	3	9	T-6	SF				○	○		
									R-6	F				○	○		
22.1 ~ 26.0	35	+0.020 +0.009	55	15	6	5	3	10	T-8	SF					○	○	
									R-8	F					○	○	
26.1 ~ 30.0	42	+0.020 +0.009	62	15	6	5	3	10	T-8	SF					○	○	
									R-8	F					○	○	
30.1 ~ 35.0	48	+0.020 +0.009	69	15	6	5	4	10	T-8	SF						○	○
									R-8	F						○	○
35.1 ~ 42.0	55	+0.024 +0.011	77	15	6	5	4	10	T-8	SF						○	○
									R-8	F						○	○

List prices of type FR are identical to those of type SF.

Ordering Example

SF - 6.0 × 12
d ℓ

Code

0000 062 060 12
Code (F:061, SF:062, FR:063) d ℓ

Inch to Metric (mm) → Inch × 25.4
Metric (mm) to Inch → Metric ÷ 25.4 or Metric × 0.03937

Special / Custom Sizes on request

Type G

Headless Liner Bushing Type G

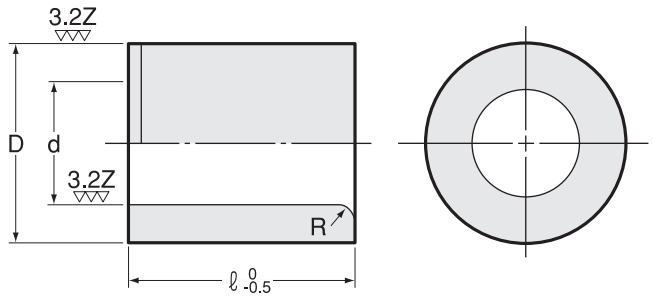

Example

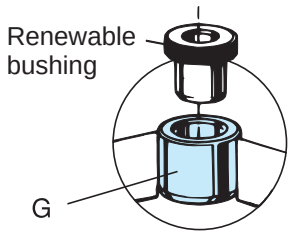

Concentric runout (T.I.R.) of O.D.to I.D.

d	8.0 ~ 18.0	18.1 ~ 50.0	50.1 ~ 55.0
G	0.005 or less	0.008 or less	0.010 or less

1. Headless liner bushing is used for guide of renewable bushing. (Not for guide of drill or reamer)
2. Tolerance of Liner Bushing O.D. (D) is p6.
   Press fit the Liner Bushing in H7 tolerance bored hole on bushing plate.

I.D.(d) of hole in bushing plate	12	15	18	22	26	30	35	42	48	55	62	70
Tolerance H7	+0.018 0			+0.021 0			+0.025 0			+0.030 0		

d		D (p6)		R	ℓ						
					12	16	20	25	30	35	45
8	+0.032 +0.023	12	+0.029 +0.018	2	○	○					
10	+0.032 +0.023	15	+0.029 +0.018	2	○	○					
12	+0.036 +0.025	18	+0.029 +0.018	2		○	○				
15	+0.036 +0.025	22	+0.035 +0.022	2		○	○				
18	+0.037 +0.026	26	+0.035 +0.022	2			○	○			
22	+0.040 +0.027	30	+0.035 +0.022	3			○	○			
26	+0.040 +0.027	35	+0.042 +0.026	3				○	○		
30	+0.041 +0.028	42	+0.042 +0.026	3				○	○		
35	+0.045 +0.029	48	+0.042 +0.026	4					○	○	
42	+0.045 +0.029	55	+0.051 +0.032	4					○	○	
48	+0.045 +0.029	62	+0.051 +0.032	4						○	○
55	+0.053 +0.034	70	+0.051 +0.032	4						○	○

Ordering Example

G - 8.0 × 12
d ℓ

Code

0000 071 060 12
Code d ℓ

Inch to Metric (mm) → Inch × 25.4
Metric (mm) to Inch → Metric ÷ 25.4 or Metric × 0.03937

Special / Custom Sizes on request

Lock Screw Type T

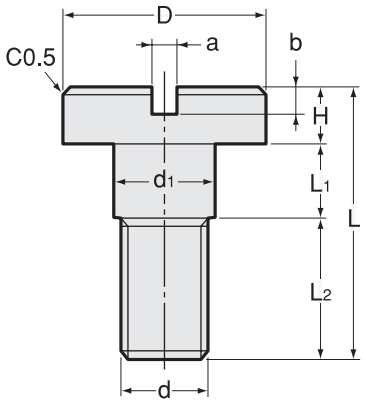

Example

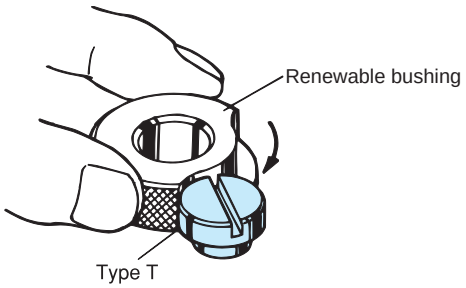

Model	d		d1	D	a	b	H	L1	L2	L
	Size	Pitch								
T-5	5	0.8 (0.9)	6 ±0.2	12 ±0.2	1.6	1.5	3	4 ±0.1	9	16
T-6	6	1	7 ±0.2	15 ±0.2	1.6	2	4	5.5 ±0.2	10.5	20
T-8	8	1.25	9 ±0.2	18 ±0.3	2	2.5	5	6.5 ±0.2	12.5	24

Position and dimension of lock screw internal thread

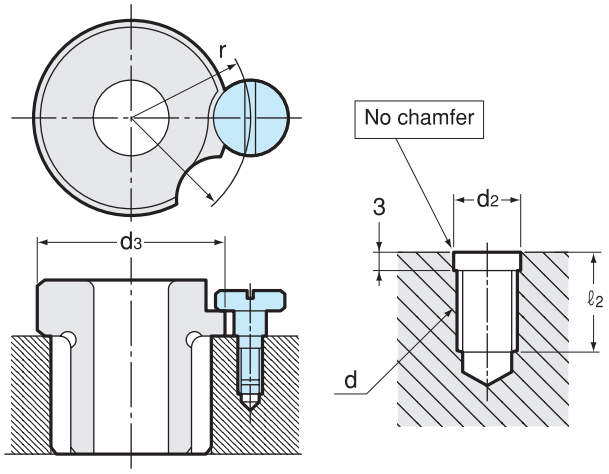

d3	d	r		d2	ℓ2
		Std size	Tolerance		
16	5	12	±0.2	5.2	11
19	5	13.5	±0.2	5.2	11
22	5	15	±0.2	5.2	11
26	5	17	±0.3	5.2	11
30	5	19	±0.3	5.2	11
35	6	22	±0.3	6.2	14
40	6	24.5	±0.3	6.2	14
47	6	28	±0.3	6.2	14
55	8	33	±0.3	8.2	16
62	8	36.5	±0.3	8.2	16
69	8	40	±0.3	8.2	16
77	8	44	±0.3	8.2	16

Ordering Example

T - 5(0.9)
d Pitch

Code

T-5 (0.8) : 0003 00000508
T-5 (0.9) : 0003 00000509
T-6 : 0003 00000600
T-8 : 0003 00000800

T-5 is avalable in P = 0.8 (ISO) and P = 0.9 (JIS) .When ordering, please specify P (pitch) 0.8 or 0.9.

Round Clamp Type R

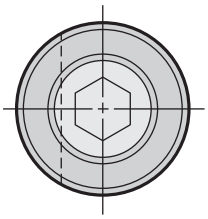

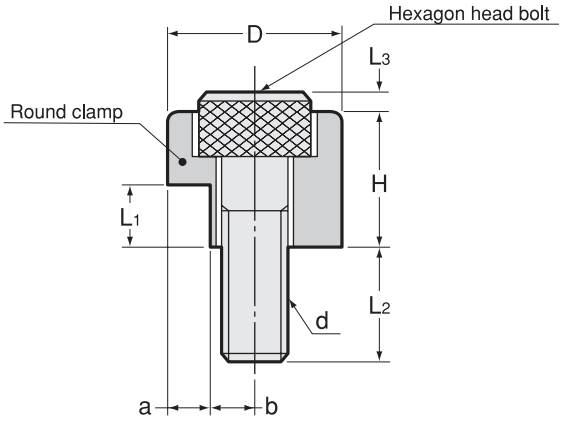

Example

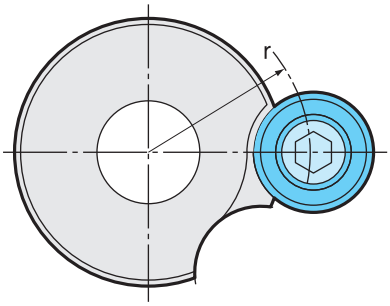

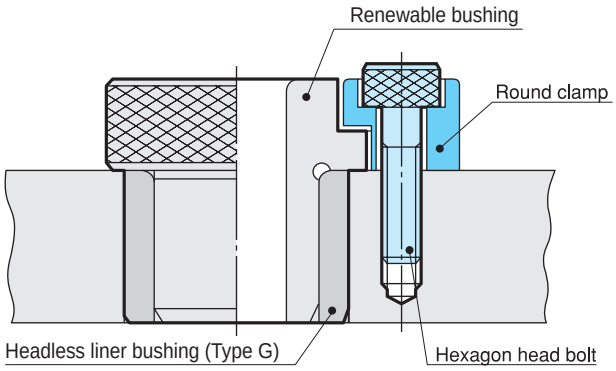

Application

Round clamp can be used in following cases.
1.Heavier round load is put on renewable bushing.
2.Round clamp can be used to prevent rotating of renewable bushing (Type D, E and F)

Model	d		D	a	b	H	L1	L2	L3	Hexagon headed bolt	Size of hexagon wrench
	Size	Pitch									
R-5	5	0.8	12.3 ±0.05	$3^{0}_{-0.1}$	3.15	8	4	9	3	M5 × 15	4
R-6	6	1	15.5 ±0.05	$4^{0}_{-0.1}$	3.75	12	5.5	8	2	M6 × 16	5
R-8	8	1.25	19.5 ±0.05	$5^{0}_{-0.1}$	4.75	15	6.5	10.5	2.5	M8 × 20	6

Hexagon headed bolt is included in round clamp.

Position and dimension of lock screw internal thread

Round clamp has the same position and dimension as those of T type lock screw.

Code

R-5 : 0007 00000005
R-6 : 0007 00000006
R-8 : 0007 00000008

Inch to Metric (mm) → Inch × 25.4
Metric (mm) to Inch → Metric ÷ 25.4 or Metric × 0.03937

Special / Custom Sizes on request

Special steel bushing

- Made to order with specifications supplied. (Shape, size , precision, material etc.)
- Quantity :1 pc.or more.
- Delivery :As arranged.
- Price :Available upon request.

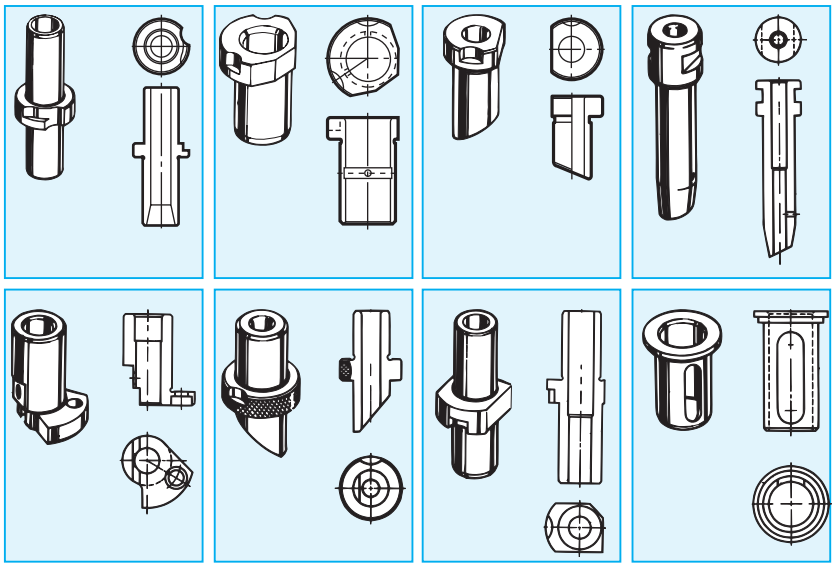

Carbide bushing and ceramic bushing

- Made to order with specifications supplied.
- Quantity :1 pc.or more.
- Delivery :As arranged.
- Price :Available upon request.

TYPE	PRESS FIT BUSHING	RENEWABLE BUSHING
SOLID TYPE		
		
LINER TYPE		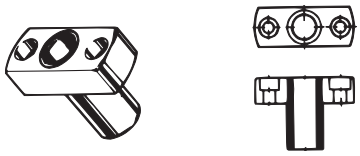
		

Non-standard bushing can be made upon request. In such a case, a drawing must be attached to your request for quote without fail.

Chamfering Cutter Series

FM
Chamfering cutter

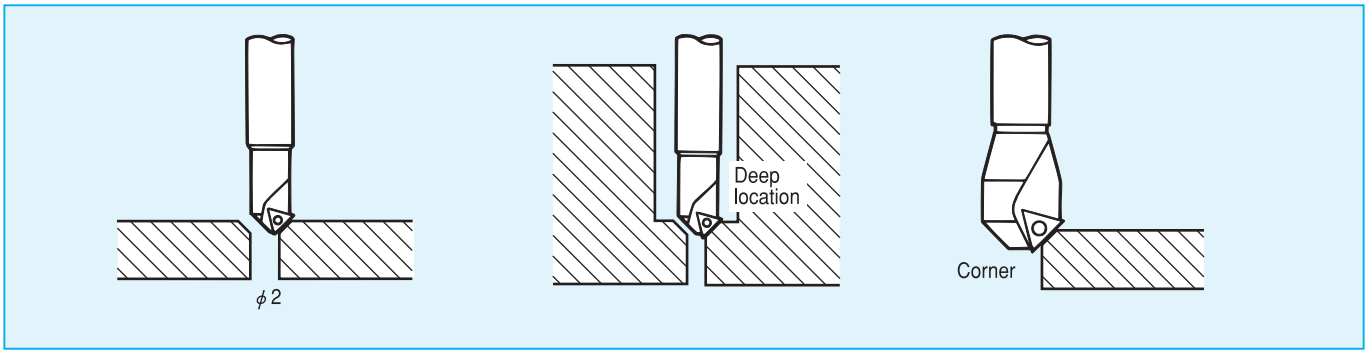

Chamfering, countersinking and corner rounding with machining center and milling machine.

BM
Back chamfering cutter

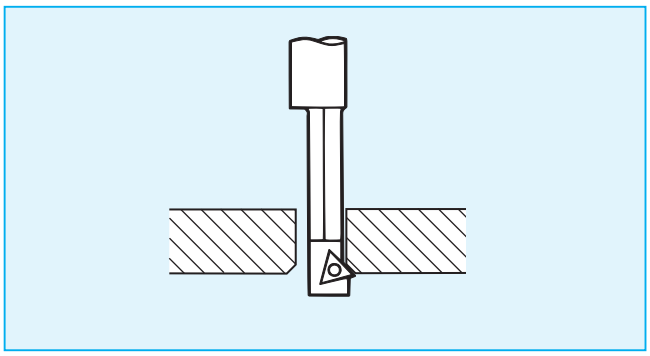

Back spot-facing with axially adjustable machines such as machining center and milling machine.

BZ
Back spot-facing cutter

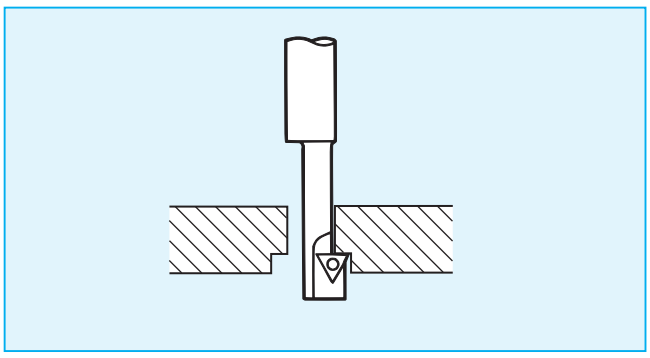

Back chamfering with axially adjustable machines such as machining center and milling machine.

Inch to Metric (mm) → Inch × 25.4
Metric (mm) to Inch → Metric ÷ 25.4 or Metric × 0.03937

Special / Custom Sizes on request

FM

Chamfering Cutter

Type1

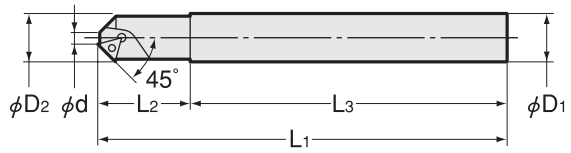

Type2

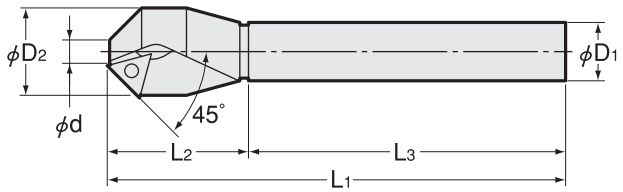

Code	Model	Type	Chamfering dia	ϕ D1	ϕ D2	L1	L2	L3	kg	Insert No.
2820 00000209	FM0209	1	2 ~ 9	12	12	140	40	100	0.12	No.520
2820 00000514	FM0514	1	5 ~ 14	16	16	160	60	100	0.23	No.520
2820 00001030	FM1030	2	10 ~ 30	20	32	167	47	120	0.41	No.504

Insert for chamfering cutter is specially designed and available only from NT. (1set=10pcs.)
Other commercialized products cannot be used.
Wrench and screw are included.

Accessories

Insert	Wrench	Clamp screw
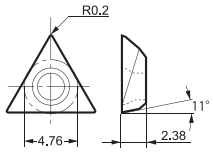	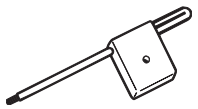	

Code	Model	Code	Model	Code	Model
2824 00052010	**No.520**	2825 00000006	**LT-6**	2825 12004306	**CB1-20043-T6**

Insert	Wrench	Clamp screw
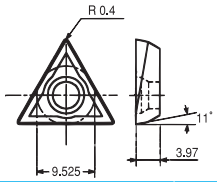	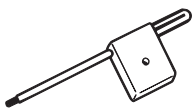	

Code	Model	Code	Model	Code	Model
2624 00050410	**No.504**	2625 00000015	**LT-15**	6041 00115672	**CB1-3507**

Recommended cutting conditions

Cutter	Workpiece					
	S45C		FC250		A2017 (Aluminum)	
	Revolution (min^{-1})	Feed/rev. (mm/rev)	Revolution (min^{-1})	Feed/rev. (mm/rev)	Revolution (min^{-1})	Feed/rev. (mm/rev)
FM0209	2100	0.1	2100	0.1	3000	0.1
FM0514	1300	0.1	1300	0.1	1800	0.1
FM1030	1000	0.15	1000	0.15	1300	0.15

Ordering Example

FM 02 09

Min. hole dia / Max. hole dia

Inch to Metric (mm) → Inch × 25.4
Metric (mm) to Inch → Metric ÷ 25.4 or Metric × 0.03937

Special / Custom Sizes on request

BM

Back Chamfering Cutter

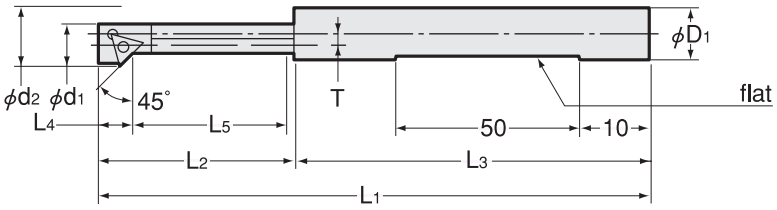

Code	Model	ϕ d1	ϕ d2	T	ϕ D1	L1	L2	L3	L4	L5	kg	Insert No.
2840 01068095	**BM068095**	6.8	9.5	1.8	12.0	109	39	70	5	32	0.07	TBGT060102R
2840 01085115	**BM085115**	8.5	11.5	2.1	12.0	119	49	70	5	42	0.07	TBGT060102R
2840 01100140	**BM100140**	10.0	14.0	2.8	16.0	131	61	70	7	52	0.13	TPMT090202
2840 01120160	**BM120160**	12.0	16.0	2.8	16.0	136	66	70	7	57	0.14	TPMT090202
2840 01140185	**BM140185**	14.0	18.5	3.2	20.0	142	72	70	8	62	0.21	TPGT110202R
2840 01160205	**BM160205**	16.0	20.5	3.2	20.0	152	82	70	8	72	0.24	TPGT110202R

Indexable inserts are not included and not available from us. Wrench and clamp screw are included.

Accessories

Wrench	Code	Model	Insert No.
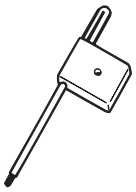	2825 00000006	**LT-6**	TBGT060102R
	2825 00000007	**LT-7**	TPMT090202
	2625 00000008	**LT-8**	TPGT110202R

Clamp screw	Code	Model	Insert No.
	2825 12004306	**CB1-20043-T6**	TBGT060102R
	2625 12204607	**CB1-22046-T7**	TPMT090202
	2625 12504808	**CB1-25048-T8**	TPGT110202R

Recommended cutting conditions

Cutter	Workpiece					
	S45C		FC250		A2017（Aluminum）	
	Revolution (min-1)	Feed/rev. (mm/rev)	Revolution (min-1)	Feed/rev. (mm/rev)	Revolution (min-1)	Feed/rev. (mm/rev)
BM068095	1450	0.05	1450	0.05	1450	0.10
BM085115	1250	0.05	1250	0.07	1250	0.10
BM100140	1250	0.07	1250	0.07	1500	0.10
BM120160	1000	0.07	1000	0.10	1300	0.10
BM140185	750	0.07	750	0.10	1100	0.10
BM160205	670	0.15	670	0.15	1000	0.15

ご注文例 Ordering Example

BM 068 095

最小加工径 Min. hole dia
最大加工径 Max. hole dia

Inch to Metric (mm) → Inch × 25.4
Metric (mm) to Inch → Metric ÷ 25.4 or Metric × 0.03937

Special / Custom Sizes on request

BZ

Back Spot-Facing Cutter

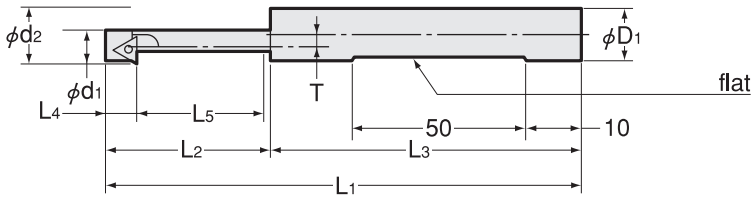

Code	Model	ϕ d1	ϕ d2	T	ϕ D1	L1	L2	L3	L4	L5	kg	Insert No.
2840 00070110	**BZ070110**	7.0	11	2.6	12	106	36	70	7	27	0.07	EPGT040102R
2840 00085140	**BZ085140**	8.5	14	3.3	12	111	41	70	8	32	0.07	TBGT060102R
2840 00105170	**BZ105170**	10.5	17	3.8	16	116	46	70	8	37		TBGT060102R
2840 00130190	**BZ130190**	13.0	19	3.8	16	122	52	70	9	42		TPGT080202R
2840 00170250	**BZ170250**	17.0	25	4.8	20	135	65	70	12	52		TPGT110202R
2840 00210310	**BZ210310**	21.0	31	5.8	25	155	85	70	12	72		TPGT110202R

Indexable inserts are not included and not available from us. Wrench and clamp screw are included.

Accessories

Wrench	Code	Model	Insert No.
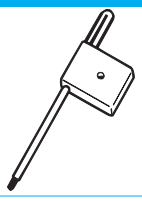	2825 00000006	LT-6	EPGT040102R
			TBGT060102R
			TPGT080202R
	2625 00000008	LT-8	TPGT110202R

Clamp screw	Code	Model	Insert No.
	2825 12003306	CB1-20033-T6	EPGT040102R
	2825 12004306	CB1-20043-T6	TBGT060102R
			TPGT080202R
	2625 12504808	CB1-25048-T8	TPGT110202R

Recommended cutting conditions

Cutter	Workpiece					
	S45C		FC250		A2017 (Aluminum)	
	Revolution (min-1)	Feed/rev. (mm/rev)	Revolution (min-1)	Feed/rev. (mm/rev)	Revolution (min-1)	Feed/rev. (mm/rev)
BZ 070110	1160	0.03	950	0.06	1400	0.05
BZ 085140	830	0.05	750	0.08	1350	0.06
BZ 105170	750	0.05	750	0.08	1100	0.08
BZ 130190	670	0.07	600	0.12	1000	0.10
BZ 170250	550	0.08	550	0.12	760	0.12
BZ 210310	400	0.11	400	0.16	600	0.16

Ordering Example

BZ 070 110

Min. hole dia / Max. hole dia

Inch to Metric (mm) → Inch × 25.4
Metric (mm) to Inch → Metric ÷ 25.4 or Metric × 0.03937

Special / Custom Sizes on request

Chamfering Series



Application	Chamfering drill	Gold chamfering drill	New chamfering drill	Chamfering holder
Deburring and chamfering for soft and ductile material.	Yes	Yes		Yes
Deburring, chamfering and countersinking for hard and in-ductile material			Yes	Yes
Chamfering and deburring with drilling machines.	Yes	Yes	Yes	Yes

Features	Chamfering drill	Gold chamfering drill	New chamfering drill	Chamfering holder
Various chamfering diameters with only one tool.	Yes	Yes	Yes	Yes
Smooth finish without chatter.	Yes	Yes	Yes	Yes
Easy positioning	Yes	Yes	Yes	Yes
Special gold coating		Yes		
Cobalt high speed steel used			Yes	
Indexable inserts reduces cutting tool costs. (No need for re-grinding.)				Yes
2 types (for hard and soft material) are available.				Yes

Inch to Metric (mm) → Inch × 25.4
Metric (mm) to Inch → Metric ÷ 25.4 or Metric × 0.03937

Special / Custom Sizes on request

Chamfering Drill

Type1

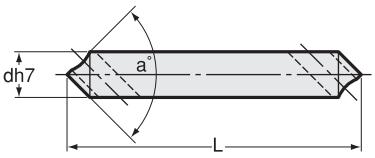

Type2

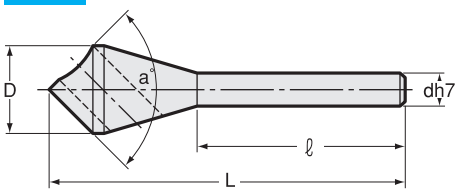

Type3

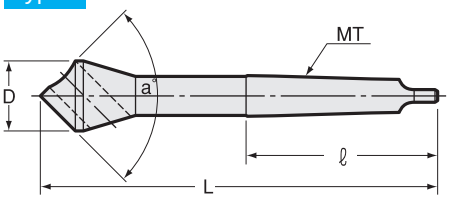

Application

For soft and ductile material. When machining hard and inductile material, please use “NEW CHAMFERING DRILL”

ST

Code	Model	a° Angle	Chamfering dia.	Type	d h7	D	ℓ	L
0030 00004490	04 -ST4 -90°	90°	2 ~ 4	1	4	—	—	50
0030 00006690	06 -ST6 -90°	90°	3 ~ 6	1	6	—	—	50
0030 00008890	08 -ST8 -90°	90°	4 ~ 8	1	8	—	—	50
0030 00009690	09 -ST6 -90°	90°	4 ~ 9	2	6	10	42	55
0030 00014890	14 -ST8 -90°	90°	6 ~ 14	2	8	15	50	70
0030 00181090	18 -ST10 -90°	90°	8 ~ 18	2	10	20	70	100
0030 00231290	23 -ST12 -90°	90°	10 ~ 23	2	12	25	73	110
0030 00281290	28 -ST12 -90°	90°	12 ~ 28	2	12	30	70	120
0030 00009660	09 -ST6 -60°	60°	4 ~ 9	2	6	10	40.5	55
0030 00014860	14 -ST8 -60°	60°	6 ~ 14	2	8	15	48.5	70
0030 00181060	18 -ST10 -60°	60°	8 ~ 18	2	10	20	71	100
0030 00231260	23 -ST12 -60°	60°	10 ~ 23	2	12	25	74	110
0030 00281260	28 -ST12 -60°	60°	12 ~ 28	2	12	30	78	120
0030 00096120	09 -ST6 -120°	120°	4 ~ 9	2	6	10	40.5	55
0030 00148120	14 -ST8 -120°	120°	6 ~ 14	2	8	15	48.5	70
0030 01810120	18 -ST10 -120°	120°	8 ~ 18	2	10	20	71	100
0030 02312120	23 -ST12 -120°	120°	10 ~ 23	2	12	25	74	110
0030 02812120	28 -ST12 -120°	120°	12 ~ 28	2	12	30	78	120

Ordering Example

14 - ST 8 - 90°

- 14: Max. chamfering dia.
- ST: Straight shank
- 8: Shank size
- 90°: Angle

MT

Code	Model	a ° Angle	Chamfering dia.	Type	D	ℓ	L	MT
0030 00009190	09 -MT1 -90°	90°	4 ~ 9	3	10	65.5	106	1
0030 00014190	14 -MT1 -90°	90°	6 ~ 14	3	15	65.5	120	1
0030 00014290	14 -MT2 -90°	90°	6 ~ 14	3	15	80	143	2
0030 00018190	18 -MT1 -90°	90°	8 ~ 18	3	20	65.5	130.5	1
0030 00018290	18 -MT2 -90°	90°	8 ~ 18	3	20	80	153	2
0030 00023190	23 -MT1 -90°	90°	10 ~ 23	3	25	65.5	140.5	1
0030 00023290	23 -MT2 -90°	90°	10 ~ 23	3	25	80	167	2
0030 00028290	28 -MT2 -90°	90°	12 ~ 28	3	30	80	174	2
0030 00028390	28 -MT3 -90°	90°	12 ~ 28	3	30	99	199	3
0030 00033290	33 -MT2 -90°	90°	14 ~ 33	3	35	80	180	2
0030 00033390	33 -MT3 -90°	90°	14 ~ 33	3	35	99	205	3
0030 00038290	38 -MT2 -90°	90°	16 ~ 38	3	40	80	185	2
0030 00038390	38 -MT3 -90°	90°	16 ~ 38	3	40	99	210	3
0030 00009160	09 -MT1 -60°	60°	4 ~ 9	3	10	65.5	106	1
0030 00014160	14 -MT1 -60°	60°	6 ~ 14	3	15	65.5	120	2
0030 00014260	14 -MT2 -60°	60°	6 ~ 14	3	15	80	143	2
0030 00018160	18 -MT1 -60°	60°	8 ~ 18	3	20	65.5	130.5	1
0030 00018260	18 -MT2 -60°	60°	8 ~ 18	3	20	80	153	2
0030 00023160	23 -MT1 -60°	60°	10 ~ 23	3	25	65.5	140.5	1
0030 00023260	23 -MT2 -60°	60°	10 ~ 23	3	25	80	167	2
0030 00028260	28 -MT2 -60°	60°	12 ~ 28	3	30	80	174	2
0030 00028360	28 -MT3 -60°	60°	12 ~ 28	3	30	99	199	3
0030 00033260	33 -MT2 -60°	60°	14 ~ 33	3	35	80	180	2
0030 00033360	33 -MT3 -60°	60°	14 ~ 33	3	35	99	205	3
0030 00038260	38 -MT2 -60°	60°	16 ~ 38	3	40	80	185	2
0030 00038360	38 -MT3 -60°	60°	16 ~ 38	3	40	99	210	3
0030 00091120	09 -MT1 -120°	120°	4 ~ 9	3	10	65.5	106	1
0030 00141120	14 -MT1 -120°	120°	6 ~ 14	3	15	65.5	120	1
0030 00142120	14 -MT2 -120°	120°	6 ~ 14	3	15	80	143	2
0030 00181120	18 -MT1 -120°	120°	8 ~ 18	3	20	65.5	130.5	1
0030 00182120	18 -MT2 -120°	120°	8 ~ 18	3	20	80	153	2
0030 00231120	23 -MT1 -120°	120°	10 ~ 23	3	25	65.5	140.5	1
0030 00232120	23 -MT2 -120°	120°	10 ~ 23	3	25	80	167	2
0030 00282120	28 -MT2 -120°	120°	12 ~ 28	3	30	80	174	2
0030 00283120	28 -MT3 -120°	120°	12 ~ 28	3	30	99	199	3
0030 00332120	33 -MT2 -120°	120°	14 ~ 33	3	35	80	180	2
0030 00333120	33 -MT3 -120°	120°	14 ~ 33	3	35	99	205	3
0030 00382120	38 -MT2 -120°	120°	16 ~ 38	3	40	80	185	2
0030 00383120	38 -MT3 -120°	120°	16 ~ 38	3	40	99	210	3

Ordering Example

14 - MT 1 - 90°

- 14: Max. chamfering dia.
- MT: Morse taper shank
- 1: MT1
- 90°: Angle

Inch to Metric (mm) → Inch × 25.4
Metric (mm) to Inch → Metric ÷ 25.4 or Metric × 0.03937

Special / Custom Sizes on request

Gold Chamfering Drill

Coated

Type1

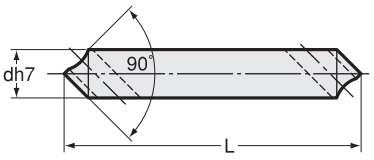

Type2

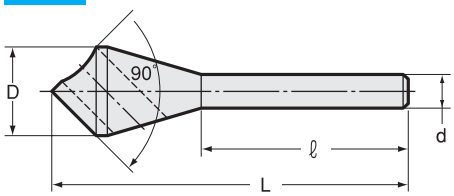

Application

For soft and ductile material. When machining hard and inductile material, please use “NEW CHAMFERING DRILL”

Code	Model	a° Angle	Chamfering dia.	Type	d h7	D	ℓ	L
0020 00004490	**G04 -ST4 -90°**	90°	2 ~ 4	1	4	—	—	50
0020 00006690	**G06 -ST6 -90°**	90°	3 ~ 6	1	6	—	—	50
0020 00008890	**G08 -ST8 -90°**	90°	4 ~ 8	1	8	—	—	50
0020 00009690	**G09 -ST6 -90°**	90°	4 ~ 9	2	6	10	42	55
0020 00014890	**G14 -ST8 -90°**	90°	6 ~ 14	2	8	15	50	70
0020 00181090	**G18 -ST10 -90°**	90°	8 ~ 18	2	10	20	70	100
0020 00231290	**G23 -ST12 -90°**	90°	10 ~ 23	2	12	25	73	110
0020 00281290	**G28 -ST12 -90°**	90°	12 ~ 28	2	12	30	70	120

Ordering Example

G14 - ST 8 - 90°

- G14: Max. chamfering dia.
- ST: Straight shank
- 8: Shank size
- 90°: Angle

Inch to Metric (mm) → Inch × 25.4
Metric (mm) to Inch → Metric ÷ 25.4 or Metric × 0.03937

Special / Custom Sizes on request

NEW Chamfering Drill

Type1



Type2

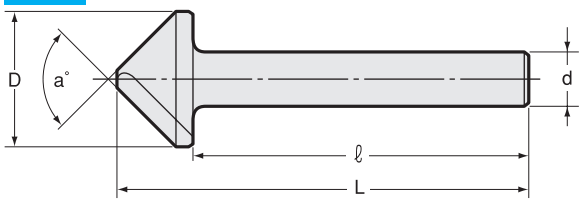

Type3

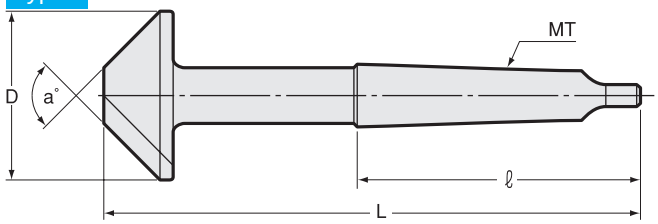

Application

For hard and inductile material. When machining soft and ductile material (such as aluminum alloy and copper alloy), please use "CHAMFERING DRILL"

ST

Code	Model	a° Angle	Chamfering dia.	Type	d h7	D	ℓ	L
0010 00007890	**07 -ST8 -90°**	90°	1.5 ~ 7	1	8	—	—	55
0010 00015890	**15 -ST8 -90°**	90°	2 ~ 15	2	8	16	54	65
0010 00251090	**25 -ST10 -90°**	90°	6 ~ 25	2	10	26	65	80
0010 00351290	**35 -ST12 -90°**	90°	11 ~ 35	2	12	36	74	90
0010 00451290	**45 -ST12 -90°**	90°	16 ~ 45	2	12	46	76	95
0010 00007860	**07 -ST8 -60°**	60°	1.5 ~ 7	1	8	—	—	55
0010 00015860	**15 -ST8 -60°**	60°	6 ~ 15	2	8	16	53	65
0010 00251060	**25 -ST10 -60°**	60°	12 ~ 25	2	10	26	64	80
0010 00351260	**35 -ST12 -60°**	60°	20 ~ 35	2	12	36	73	90
0010 00451260	**45 -ST12 -60°**	60°	26 ~ 45	2	12	46	74	95
0010 00078120	**07 -ST8 -120°**	120°	1.5 ~ 7	1	8	—	—	55
0010 00158120	**15 -ST8 -120°**	120°	2 ~ 15	2	8	16	52	60
0010 02510120	**25 -ST10 -120°**	120°	6 ~ 25	2	10	26	65	75
0010 03512120	**35 -ST12 -120°**	120°	11 ~ 35	2	12	36	74	85
0010 04512120	**45 -ST12 -120°**	120°	16 ~ 45	2	12	46	73	85

MT

Code	Model	a° Angle	Chamfering dia.	Type	MT	D	ℓ	L
0010 00015190	**15 -MT1 -90°**	90°	2 ~ 15	3	1	16	65	120
0010 00015290	**-MT2 -90°**	90°	2 ~ 15	3	2	16	80	140
0010 00025190	**25 -MT1 -90°**	90°	6 ~ 25	3	1	26	65	125
0010 00025290	**-MT2 -90°**	90°	6 ~ 25	3	2	26	80	145
0010 00035290	**35 -MT2 -90°**	90°	11 ~ 35	3	2	36	80	145
0010 00035390	**-MT3 -90°**	90°	11 ~ 35	3	3	36	100	180
0010 00045290	**45 -MT2 -90°**	90°	16 ~ 45	3	2	46	80	150
0010 00045390	**-MT3 -90°**	90°	16 ~ 45	3	3	46	100	185

Ordering Example

15 - ST 8 - 90°

- 15 — Max. chamfering dia.
- ST — Straight shank
- 8 — Shank size
- 90° — Angle

Ordering Example

15 - MT 1 - 90°

- 15 — Max. chamfering dia.
- MT — Morse taper shank
- 1 — MT1
- 90° — Angle

Inch to Metric (mm) → Inch × 25.4
Metric (mm) to Inch → Metric ÷ 25.4 or Metric × 0.03937

Special / Custom Sizes on request

Chamfering Holder

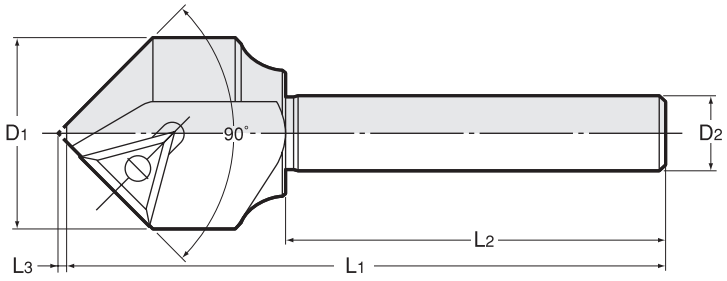

Code	Model	(ϕ) Chamfering dia	Dimensions						Insert No.
			D1	D2	L1	L2	L3	kg	
2620 00251290	**C25 -ST12 -90°**	5 ~ 25	25	12	95	60	1.6	0.11	No.504 No.510
2620 00401290	**C40 -ST12 -90°**	20 ~ 40	40	12	95	60	8.4	0.24	
2620 00501290	**C50 -ST12 -90°**	30 ~ 50	50	12	95	60	13.9	0.38	

Insert for chamfering cutter is specially designed and available only from NT. (1set=10pcs.)
Other commercialized products cannot be used.
Wrench and screw are included.

Accessories

Indexable inserts

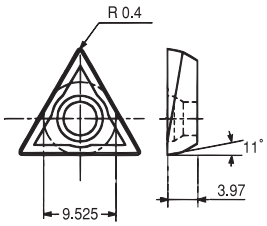

Steel, Cast iron

Code	Model
2624 00050410	**No.504**

Aluminum, Mild steel

Code	Model
2624 00050510	**No.510**

Wrench

Code	Model
2625 00000015	**LT-15**

Clamp screw

Code	Model
2625 00115672	**CB1-3507**

Recommended cutting conditions

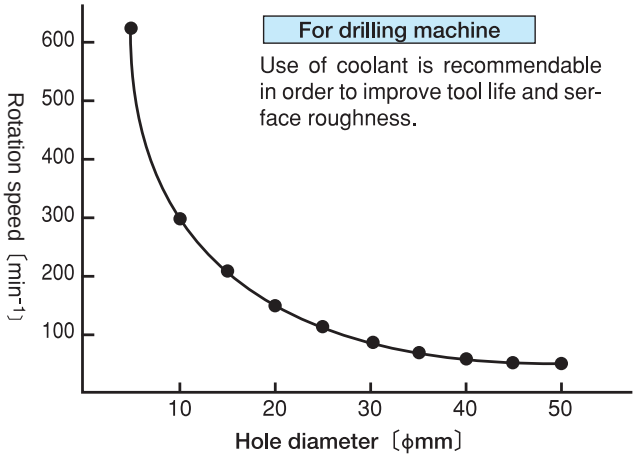

For drilling machine

Use of coolant is recommendable in order to improve tool life and surface roughness.

When using this insert with machining center,
please adjust cutting speed between 40 and 100m/min.

Ordering Example

C25 - ST 12 - 90°

- C25: Max. chamfering dia.
- ST: Straight shank
- 12: Shank size
- 90°: Angle

Guide Line For Rotation Speed

NEW CHAMFERING DRILL

For hard and inductile material

- S45C
- FC20
- SUJ2
- SK3
- SKD11
- SUP6

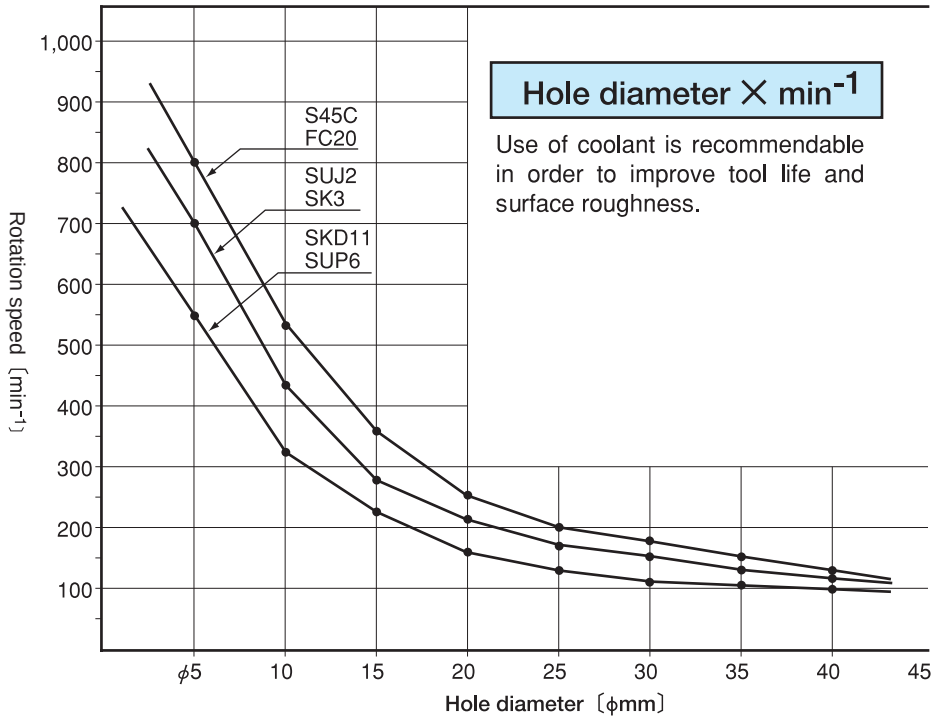

CHAMFERING DRILL

For soft and ductile material

- Aluminum alloy
- Copper alloy
- Rolled steel

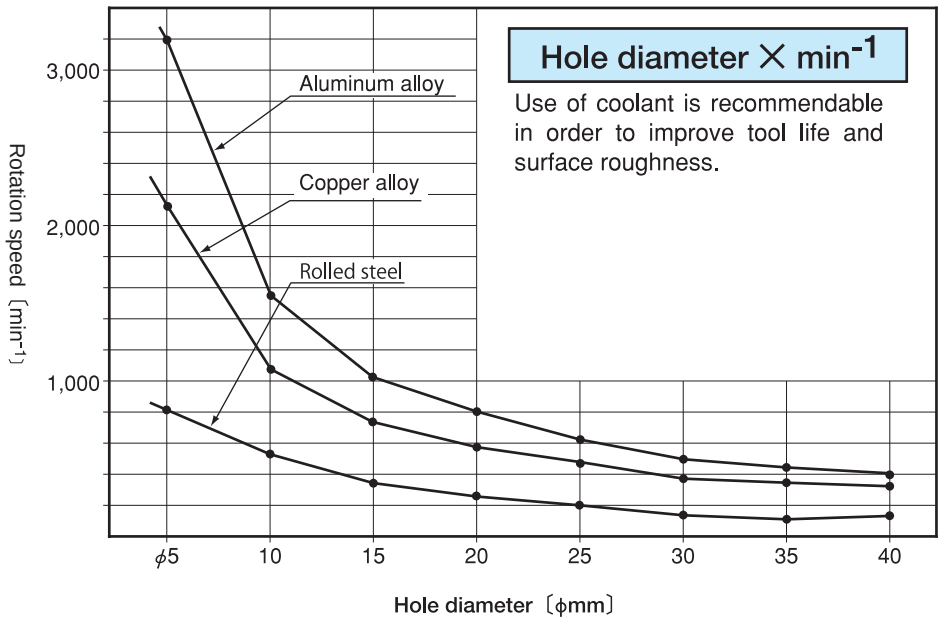

Inch to Metric (mm) → Inch × 25.4
Metric (mm) to Inch → Metric ÷ 25.4 or Metric × 0.03937

Special / Custom Sizes on request

TROUBLESHOOTING

Troubleshooting for Milling Chuck

Details of the trouble	Cause	Solution / Countermeasures
Tool cannot be held after tightening	Tool shank diameter is too small.	・Tool shank diameter should be within h7 tolerance. ・Use a tool with a shank diameter tolerance of h7.
Tool insertion is hard(not possible)	Scratch or dent exists in chuck I.D. or tool shank.	・Replacement of chuck or tool. ・Touching up of area in question (rubbing off with sand paper #1000 and above) Correction (grinding) by NT TOOL is not possible.
	Tool diameter is too big.	Use a tool with a shank diameter tolerance of 7h.
	Clamping ring is not fully loosened.	Rotate clamping ring counterclockwise more than one time after a cutting tool is removed.
Clamping ring cannot be loosened.	Deformation of roller guide because clamping ring has not loosened enough after removing tool.	・Ask NT for repair. (In some cases, irreparable.) ・Rotate clamping ring counterclockwise more than one time after a cutting tool is removed.
	Rust inside.	Ask NT for repair. (In some cases, irreparable.)
	Flaking on sliding surface.	Ask NT for repair. (In some cases, irreparable.)
Tool cannot be pulled out.	Seizing caused by tool slippage (Seizing caused by impact when tool gets broken)	・Ask NT for repair. (In some cases, irreparable.) ・Check completion of clamping.
	・Fretting corrosion of I.D. and tool shank. (Seizing caused by rust.) ・Insufficient clamping. ・Insufficient tool insertion length. ・Tool shank diameter is smaller than h7 tolerance. ・Cutting resistance is too large. (Pull-out by precession.) →Bending moment is too large.	・Insert shank deeper than the minimum insertion length. ・Use a tool with a shank diameter tolerance of 7h. ・Cutting resistance should be lowered. a : Lower feed rate or higher rotation (Approx. 20%) b : Lower cutting depth. ・Bending moment should be lowered. c : Shorter tool projection length.
Rotation of tightening ring is not smooth.	Deformation of needle rollers because tool remained chucked for long time.	・First loosening may not feel smooth. ・Loosen clamping ring and give it a few more counter-clockwise rotations. (Rough touch will not be a problem in practice. If tightening is very difficult, however, return it to NT.)
Tool is pulled out during cutting.	Insufficient clamping.	Check completion of clamping.
	Insufficient tool insertion length.	Insert shank deeper than the minimum insertion length.
	Tool shank diameter is smaller than h7 tolerance.	Use a tool with a shank diameter tolerance of 7h.
	Cutting resistance is too large. (Pullout by precession.) → Bending moment is too large.	Cutting resistance should be lowered. a : Higher rotation or lower feed rate (Approx. 20%). b : Lower cutting depth. c : Shorter tool projection length.
	Chuck rigidity is too low.	Use another type of tool holder (such as side lock endmill holders).
No click sound is generated (CTA). (**Tight-up ring's failure**)	・Rollers for tight-up ring are worn or broken. ・Tight-up ring is worn or broken.	・Ask NT for repair. (In some cases, irreparable.) No over-tightening or additional turn after a click sound is generated.

Details of the trouble	Cause	Solution / Countermeasures
Chattering	Chattering by chuck's resonance.	Shift rotation speed to vary resonance frequency. (± 10% and above).
	Insufficient clamping.	Check completion of clamping.
	Insufficient tool insertion length.	Insert shank deeper than the minimum insertion length.
	Tool shank diameter is smaller than h7 tolerance .	Use a tool with a shank diameter tolerance of h7.
	Cutting resistance is too small compared with the chuck's rigidity.	Revision of cutting conditions (Higher cutting resistance). a : Higher feed rate or lower rotation (Approx. 20%). b : Higher depth of cut or use a tool with a tolerance of h7.
	Cutting resistance is too high in comparison with the chuck's rigidity.	・Revision of cutting conditions (Lower cutting resistance). a : Lower feed rate or higher rotation (Approx. 20%). b : Lower depth of cut. ・Use bigger tool chuck. ・Shorter tool projection length. ・Shorter tool chuck length.
	Insufficient chucking force at nose because of using MC collet (mainly Φ12mm and below).	Trial use of collet chucks recommended.
	Mischoice of retention stud.	Use designated retention stud for M/C.
	Expansion of BT shank because of over-tightening retention stud.	Keep recommended torque value for tightening retention stud.
Falling off of tool chuck during ATC	Interference with ATC arm.	・Check L0 dimension on our catalog and maximum tool dimension for the M/C. ・Revision of tool chuck size.
	Overload for ATC capacity.	Check maximum load for ATC.
	Maximum allowable moment for the M/C is exceeded.	Check maximum allowable moment for M/C.
	Clamp movement of ATC is not synchronized.	Consult with the machine tool builder.
Deteriorated runout accuracy	Rust, damage or deformation of chuck I.D. and collet.	・Replacement of chuck or tool. ・Touching up of area in question (rubbing off with sand paper #1000 and above). Correction (grinding) by NT is not possible.
	Insufficient tool insertion length.	Keep minimum insertion length.
	Scratch or dent on tool shank.	Touching up of scratch or dent.
	Notch or flat on tool shank.	Use tool without notch or flat.
	Expansion of BT shank because of over-tightening retention stud.	Keep recommeneded torque value for tightening retention stud.
	Poor accuracy of tool.	Replacement of tools.
	Dust seizing in the chucking part.	Cleaning of chuck I.D. and collet.
	Deteriorated accuracy of tool interface. ・Large runout (2 micrometers and above) of spindle I.D. or end face (in the case of two-face contact). ・Dust, scratch or dent on taper area or end face (in the face of two-face contact).	・Correction (regrinding) of machine spindle. ・Cleaning of taper and end face (in the case of two-face contact), touching up of scratch or dent.

Troubleshooting for Hydraulic Chuck

Details of the trouble	Cause	Solution / Countermeasures
Tool clamping is not possible.	Tool shank diameter is too small.	• Tool shank diameters should be within h7 tolerance. • Use a tool with a shank diameter tolerance of h7.
	Oil leakage.	• Check clamping function. (No. of revolution of actuating screw). • Ask NT for repair. (In some cases, irreparable.)
Hard to insert a tool. (**unable to insert.**)	Scratch or dent in chuck I.D. and tool shank.	• Replacement of chuck or tool. • Touching up of area in question (rubbing off with sand paper #1000 and above). Correction (grinding) by NT is not possible. • Ask NT for repair.(In some cases, irreparable.)
	Tool shank is too large. Actuating screw is not fully loosened and I.D. of clamping sleeve was deformed with residual pressure.	• Use a tool with a shank diameter tolerance of h7. • Insert tool after fully loosening the screw.
	Notch or flat of tool shank deformed chuck I.D.	Use a tool without notch or flat. The chuck must be returned to NT for repair.
	Insufficient tool insertion length deforms deep area of chuck I.D.	• Ask NT for repair.(In some cases, irreparable.) • Insert shank deeper than the minimum insertion length.
Tool cannot be pulled out.	Seizing from tool slippage (Seizing caused by impact when tool is broken.)	Ask NT for repair.(In some cases, irreparable.)
	Notch or flat of tool shank deforms chuck I.D.	Use a tool without notch or flat.
	Insufficient tool insertion length deforms deep area of chuck I.D.	Insert shank deeper than the minimum insertion length.
Tool is pulled out during operation.	Insufficient clamping force.	Check clamping function (No. of revolution of actuating screw).
	Insufficient tool insertion length.	Insert shank deeper than the minimum insertion length.
	Tool shank diameter is smaller than h7 tolerance.	Use a tool with a shank diameter tolerance of h7.
	Cutting resistance (bending moment) is too large. (Pull out of tool because of precession.)	• lower cutting resistance. a. Higher rotation or lower feed rate (Approx. 20%). b. Lower cutting depth. • Lower bending moment. c. Shorten tool projection length.
	Insufficient rigidity of holder.	• Use different chuck (holder). • Trial use of colet holder, milling chuck or shrinker chuck recommended.

Details of the trouble	Cause	Solution / Countermeasures
Chattering	Chattering by chuck's resonance.	Shift rotation speed to vary resonance frequency. (± 10% and above)
	Insufficient clamping force.	Check clamping function. (No. of revolution of actuating screw)
	Insufficient tool insertion length.	Insert shank deeper than the minimum insertion length.
	Tool shank diameter is smaller than h7 tolerance.	Use a tool with a shank diameter tolerance of 7h.
	Cutting resistance is too small in comparison with holder's rigidity.	Revision of cutting conditions (Higher cutting resistance). a. Higher feed rate or lower rotation speed (Approx. 20%). b. Higher cutting depth.
	Bending moment is too large.	・Shorter tool projection length . ・Shorter projection length of chuck.
	Inappropriate choice of holder (chuck) for the cutting.	・Use different chuck (holder). ・Trial use of collet holder, milling chuck or shrinker chuck recommended.
	Mischoice of retention stud.	Use designated retention stud for the machine.
	Expansion of BT shank because of over-tightened retention stud.	Keep recommended torque value for tightening retention stud.
Deteriorated runout accuracy during cutting **＊ Guidelines: 15 micrometers and more at 4d**	Rust, scratch or deformation of chuck I.D.	・Replacement of chuck or tool . ・Touching up of area in question (rubbing off with sand paper #1000 and above). Correction (grinding) by NT is not possible. ・Ask NT for repair. (In some cases, irreparable.)
	Insufficient chucking length.	Insert shank deeper than the minimum insertion length.
	Scratch or dent on tool shank.	Scratch or dent must be removed.
	Notch or flat of tool shank.	Use a tool without notch or flat.
	Expansion of BT shank because of over-tightening retention stud (BT30 in paticular).	Keep recommended torque value for tightening retention stud.
	Poor accuracy of tool.	Replacement of tools.
	Dust seizing in chucking area.	Cleaning of chuck I.D.
	Deteriorated accuracy of tool interface ・Large runout (2 micrometers and above) of spindle I.D. or end face (in the case of two-face contact). ・Dust, scratch or dent on taper area or end face (in the face of two-face contact).	・Regrinding or correction of machinespindle ・Cleaning of taper and end face (in the case of two-face contact), touching up of scratch or dent.
Deteriorated runout accuracy (flange type)	Misalignment of installation part	Re-installation into the spindle.
	Burr in the undercut at the deep end of I.D. mouth.	Deburring (Sandpaper #1000 and above).
	Misalignment between flange part and chuck part (2-piece type).	Check runout of I.D. from the flange.

Troubleshooting for Stub Holder

Details of the trouble	Cause	Solution / Countermeasures
Unable to mount collet.	Wrong choice of collet.	Check collet's type and size.
Unable to mount to spindle.	Spindle dimension is different from standard dimension.	Check spindle dimension.
	Seized or adhered chip and dust to holder shank, spindle I.D.	Cleaning of holder shank, spindle I.D.
	Scratch or dent exists in spindle I.D. or holder shank.	・Replace holder or repair spindle. ・Touching up of area in question (rubbing off with sand paper #1000 and above) Correction (grinding) by NT TOOL is not possible.
	In the case of KD series, end face to end face dimension between spindle and finger bolt is longer than specified dimension.	・Check spindle dimension. ・Make spacer thicker to specified dimension.
	In the case of KH series, spindle collar thickness is larger than specified dimension.	Repair spindle.
Excessive play when mounting into spindle.	Spindle dimension is different from standard dimension.	Check spindle dimension.
	In the case of KH series, spindle collar thickness is smaller than specified dimension.	Repair spindle.
	In the case of KH series, spindle mounting is not proper due to functional failure of operating sleeve.	・When installing, push operating sleeve down to bring it into position for secure mounting. ・Cleaning of operating sleeve I.D.
	In the cases of KH-A, KH series, rubber damper is deteriorated.	Ask NT for repair. (In some cases, irreparable.)
	In the case of KH-E series, steel ball is worn.	Ask NT for repair. (In some cases, irreparable.)
	In the case of KD series, finger collet taper is worn.	Replacement of finger collet assembly.
	In the case of KD series, finger collets are broken.	Replacement of finger collet assembly.
	In the case of KD series, end face to end face dimension between spindle and finger bolt is shorter than specified dimension.	・Check spindle dimension. ・Make thickness of a spacer adjust to specified dimension.
Holder comes off from spindle.	In the case of KH/EC series, coolant pressure is higher than specified pressure.	・Reduce coolant pressure. ・Check specified coolant pressure.
	In the case of KH series, spindle mounting is not proper due to functional failure of operating sleeve.	・When installing, push operating sleeve down to bring it into position for secure mounting. ・Cleaning of operating sleeve I.D.
Coolant is leaking or there is no coolant output.	KH/EC is not being used. (Stub holders other than KH/EC are not compatible with center-thru coolant.)	Use KH/EC. ・For high coolant pressure　KH/EC1type ・For low coolant pressure　KH/EC2 type
	Coolant pressure is higher than specified pressure.	Use coolant at a pressure equal to or lower than maximum pressure allowed.
	Collets compatible with center-thru coolant (OH or C type collets) are not being used.	Use OH or C type collets. ・OH type・・・Center through ・C type・・・Collet through
	Coolant cap “O” ring is deteriorated or worn.	Replacement of O-ring.

Details of the trouble	Cause	Solution / Countermeasures
Cutting tool comes off or slips.	Large cutting resistance to chucking force.	・Revision of cutting conditions (Decrease cutting resistance.) a : Higher rotation speed or lower feed rate (Approx. 20%) b : Lower cutting depth ・Shorter tool projection length
	Insufficient tightening of cap nut	・Keep recommended torque value for tightening cap nut. ・Use torque wrench.
	Tightening not sufficient due to cap rotary ring failure.	Replacement of cap nut.
	Insufficient tightening of cap nut because of increased friction in the thread part (Tightening of collets not enough.)	Apply oil (grease) on the thread part after cleaning it.
	Tool tang does not fit into preset driver groove due to dimensional differences.	・Check tool tang dimension and preset driver groove dimension. ・Replacement of preset driver.
Poor accuracy.	Spindle and holder have rattling.	See Problem: “Excessive play when mounting into spindle” in the trouble column and reduce play (clearance) to appropriate level.
	Adhered chip and dust to spindle end surface or holder end surface.	Cleaning of spindle end surface or holder end surface.
	Poor chucking accuracy of collet.	Replacement of collets.
	Dust seizing in collet insertion area.	Cleaning of collet insertion area.
	Scratch or dent in holder I.D.	Replacement of holder.
	Scratch or dent on collet I.D. and O.D.	Replacement of collets.
	Insufficient chucking length.	Keep minimum insertion length. (collet ID length must be filled.)
	Poor accuracy of cutting tool.	Tool replacement.
	Dust seizing in cap nut thread.	Cleaning of thread part, applying grease.
	Malfunction of rotor ring of cap nut. (Rotor ring will not rotate smoothly.)	・Cleaning of cap nut. (so that rotor ring will rotate smoothly.) ・Replacement of cap nuts.
Chattering	Cutting resistance is too high in comparison with chuck's rigidity.	・Revision of cutting conditions (Decrease cutting resistance.) a : Higher rotation speed or lower feed rate (Approx. 20%) b : Lower cutting depth ・Shorter tool projection.
	When end-milling with series KH-E, KD-T, cutting pressure is too low against the rigidity of holder.	Revision of cutting conditions (Increase cutting resistance.) a : Higher feed rate or lower rotation (Approx. 20%) b : Higher cutting depth
	Bending moment is too large.	Shorter tool projection length
	Spindle and holder have rattling.	See Problem: “Excessive play when mounting into spindle” in the trouble column and reduce play (clearance) to appropriate level.
Holder does not come off from spindle.	Deposition of fretting, rust and/or adhered coolant residual.	Cleaning of spindle and holder shank.
	In the case of KH series, operating sleeve failure.	Cleaning of operating sleeve I.D.

Troubleshooting for Tapping Chuck

Details of the trouble	Cause	Solution / Countermeasures
Thread gauge (stop) can go through. (**Enlarged thread diameter**)	Lean threads because of excessive compression (Tapping chuck's compression works.) ※ Reason for lean threads For the compression of tapping chuck, a strong spring is used to resist the pressure when a tap starts to cut. This compression should not be used for normal tapping, but with tap adaptor with safety clutch to prevent tap breakage.Strong compression will result in lean threads.	・Decrease feed rate more than tap pitch. (85-95% of tap pitch) ・In case there is no improvement; Feed for forward movement : 85-95% Feed for backward movement :100% ・In case feed mechanism of spindle is master feed, → Use tapping chuck with compression zero. ・In case tapping chuck with compression zero is in use, → Check feed mechanism of the machine.
	Sharpness of tap is low and compression of tapping chuck works.	・Larger chamfering for the entrance of prepard hole ・Use tap with more threads for chamfering. (2.5 threads and more) ・Weakened compression spring of tapping chuck → Return it to NT TOOL for repair
	Malfunction of tension/compression	Check if the chuck returns to its original length after pulling and pushing by hand.
	Malfunction of clutching mechanism of tapping chucks with auto-depth control or selfreversing function.	Pull the chuck and turn right by hand to check if the clutch gets disengaged and turn left by hand to see if the clutch gets engaged. → Return it to NTTOOL if malfunction of the clutch is found.
	Mischoice of tap	・Tapping chuck with length compensation is not suitable for synchro tap (eccentric relief). ・Use normal tap (concentric relief) which has self-advancing action.
Thread gauge (through) cannot go through. (**Thread diameter is small.**)	Warpage of burr has been generated at the entrance of tap hole.	・Return timing is premature (before tap is pulled out) → Revision of approach point Guidelines : maximum tension + 5 ・Too much tension → Increase feed rate. Must be lower than tap pitch.
	Burr at the entrance of tap hole due to the reaction to compression.	Check if the compression of tapping chuck is working during operation. → Decrease feed rate less than tap pitch (85-95% of tap pitch) → If the problem is not fixed, Feed for forward movement:85-95% Feed for backward movement:100%
	Damage at the entrance of tap hole	・Misalignment between tap and prepared hole → Correction of misalignment → Use tapping chuck with radial float ・Chamfering at the hole entrance is too small. → Larger chamfering diameter
	Tap wear	Replacement of tap
Tap is pulled out.	Too much drawing force for tap	・Check if tapping chuck's tension is exceeded → Increase feed per rotation (must be less than tap pitch.) ・Return timing is premature. → Approach point should be distanced. (Guidelines:Tapping chuck's maximum tension + 5)
	Deformation or breakage of steel balls in tap adaptor	Tap adaptor should be replaced.
	Ball locking mechanism of tap adaptor does not work (in the case of carbide tap)	Use collet type tap adaptor.

Details of the trouble	Cause	Solution / Countermeasures
Thread is not deep enough. (Variation of thread depth)	Cutting to prepared hole is difficult and compression of tapping chuck works.	• Check the diameter of prepared hole. → (Refer to table of prepared holes) • Small chamfering and large cutting resistance → Larger chamfering diameter
	Torque clutch of tap adapter (type WES) works.	Accumulated chips or dust at the bottom of the hole → Use spiral tap for evacuating chips. (Point tap tends to push out chips.)
	Variation caused by large inertia of machine spindle	• Lower rotation speed (500rpm and below) • Check the "stationary" position of the spindle (Z-axis)
	Decreased preset length of tap • Malfunction of tapping chuck • Malfunction of tap adaptor with length adjustment (type WEN and WESN)	• Tapping chuck will not return to the original length. → Check tension/compression of tapping chuck. • Length adjustment screw is not back to the locking position. → Check that adjustment screw will not turn after adjustment is completed.
Thread is too deep. (Variation of thread depth)	Increased preset length of tap • Malfunction of tapping chuck • Chucking error of tap adaptor • Malfunction of tap adaptor with length adjustment (WEN and WESN)	• Tapping chuck will not return to its original length. → Check tension/compression of tapping chuck. • Tap has been pulled out of tap adaptor. → Check tap adaptor's locking mechanism. (if tap cannot be pulled out by hand.) • Length adjustment screw is not back to the locking position (lowest psition). → Check if adjustment screw will not turn after length adjustment
	Variation caused by large inertia of machine spindle	• Lower rotation speed (500rpm and below) • Check machine spindle's stationary position (in Z-axis).
Breakage of tap at the hole entrance	Cutting by tap is difficult.	• Enlarge chamfering diameter of prepared hole. • Use tap with more threads for chamfering
Breakage of tap in the middle	Diameter of prepared hole is too small and excessive torque is applied.	Optimization of prepared hole diameter
	Incompatibility of tap adaptor	Tap adaptor with torque clutch (type WES) is not suitable for tapping chuck with compression 1mm and below.
	Insufficient compression of tapping chuck when tap adaptor with torque clutch (WES) is in use.	• Use tapping chuck with more compression. • Adaptor with torque clutch (type WES) cannot be used. (Type WE or WEN is recommended instead.)
Breakage of tap at the regular bottom	Tap hits the bottom of prepared hole and excessive torque is applied.	• Check NC program • Check the clerance between tap's chamfering threads and prepared hole. → If there is not enough clearance, decrease the number of chamfering threads. • Deepen prepared hole. • Shallow thread depth.
	Accumulated chip or dust at the bottom of the hole	Use spiral tap to evacuate chips. (Point tap tends to push out chips forward.)
	Increased preset length of tap • Malfunction of tapping chuck • Chucking error of tap adaptor • Malfunction of tap adaptor with length adjustment (WEN and WESN)	• Tapping chuck will not return to its original length. → Check tension/compression of tapping chuck. • Tap has been pulled out of tap adaptor. → Check the locking mechanism of tap adaptor. (See if tap cannot be pulled out by hand.) • Length adjustment screw has not been returned to the locking position (lowest position). → Check if adjustment screw will not turn after adjustment is completed.
	Variation caused by large inertia of machine spindle	• Lower rotation speed (500rpm and below) • Check the stationary position of machine spindle (in Z-axis).

MEMO

NT TOOL CORPORATION

OUTLINE

USA OFFICE
318 Seaboard Lane Suite 301 Franklin TN, 37067 U.S.A.
Tel. 1-615-771-1899 Fax. 1-615-771-0121
www.nttoolusa.com E-mail: sales@nttoolusa.com

HEAD OFFICE
1-7-10, Yoshikawa-cho,Takahama-City, Aichi, 444-1386 Japan
Tel. 81-(0)566-54-0101 Fax. 81-(0)566-54-0111
www.nttool.com E-mail: osb@nttool.co.jp
TOKYO OFFICE
Tel. 81-(0)3-3451-9141 Fax. 81-(0)3-3451-9085
OSAKA OFFICE
Tel. 81-(0)6-6308-1332 Fax. 81-(0)6-6302-0653
HIROSHIMA OFFICE
Tel. 81-(0)82-258-3810 Fax. 81-(0)82-258-3811

EUROPE OFFICE
Siemensstrasse 17A, 61449 Steinbach / Ts., Germany
Tel.49-(0)6171-91639-0 Fax.49-(0)6171-91639-90
www.nttooleurope.com E-mail: info@nttooleurope.com
CHINA OFFICE
Room N, Floor 15, MeiXin building, 728 The Xizangzhong Rd., Shanghai 200001 P.R.China
Tel. 86-(0)21-6361-9540 Fax. 86-(0)21-6360-7845
E-mail: nt-shanghai@nttool.co.jp
THAILAND OFFICE / FACTORY
222 Moo 1, Hi-tech Industrial Estate, Banpho, Bang Pa-in, Ayuthaya 13160 Thailand
Tel. 66-(0)3531-4180 Fax. 66-(0)3531-4182
E-mail: nt_thai@ksc.th.com
INDONESIA OFFICE / FACTORY
Jl. Mitra Raya II Blok E No.3, Kaw. Industri Mitrakarawang Parungmulya, Ciampel, Karawang, Jawa Barat, 41361 Indonesia
Tel. 62-267-863-1711 Fax. 62-267-863-1712
E-mail: nt-indonesia@nttool.co.jp
IIDA FACTORY
Tel. 81-(0)265-25-5200 Fax. 81-(0)265-25-5225

Capital	30 million yen
Workforce	200
Annual sales	5 billion yen



USA OFFICE


HEAD OFFICE

HISTORY

March, 1926
Established as NAITO TEKKOSHO in Nagoya to produce auto parts and wire-making machine.
December, 1944
Yoshihama Factory was built in Yoshihama-cho, Takahama
December, 1945
Started production in Takahama under the name of "NAITO KOKI SEISAKUSHO".
April, 1967
First "NT" brand products drill jig bushing were marketed in Japan.
April, 1968
Nominated as a model factory for small and medium sized business labor management
July, 1975
Started marketing of chamfering drills
April, 1976
The merchandise division was separated from NAITO KOKI SEISAKUSHO to form a new company NT TOOL CORPORATION.
September, 1976
Overseas development was initiated with export to U.S.
November, 1978
Export to Asian countries (Taiwan, Singapore, Korea etc.) started.
March , 1979
Concluded license agreement with Otto Bilz Germany to exclusively manufacture and sell their tooling products in Japan.
August , 1979
Head office and factory were newly built.
July, 1980
Fully computerized POS system was employed for sales and production management.
May, 1982
Based on the new business plan, the plant site was purchased (15,900 sqm)
December, 1983
Opened Iida Factory at Iida City, Nagano Pref.
1985
Started marketing of NC tooling.
March, 1987
CAD system was introduced in R&D and Engineering Department.
April, 1990
Concluded license agreement with Wohlhaupter Germany to exclusively manufacture and sell their tooling in Japan.
November, 1993
High-speed data communication network was introduced in head office, factories and sales offices.
August, 1994
For the first time in Japan, mass production of HSK tooling was started.
September, 1994
Entered into a technical assistance agreement with Mapal, Dr. Kress Germany.
October, 1994
Hiroshima sales office was opened.
August, 1996
Achieved ISO9001(JQA NO.1372) for all operations and products. First time in tooling industry in Japan.
September, 1996
ISO9001 was registered by UL (U.S.A.) as well as AFAQ(France). (Except imported products and products made under OEM contracts.)
April, 1998
Opened Europe Branch Office in Aachen Germany as a technical service base.
October, 1998
Head office was newly built.
January, 2001
BT two-face contact system "AHO" was released.
December, 2001
A part-machining plant of the same scale as the Iida Factory was built in a high-tech industrial park in Thailand (local subsidiary NT Thailand).
January, 2003
Europe Branch Office was relocated to Frankfurt Germany.
April, 2003
Production was started in NT Thailand.
NT USA Corporation was established as a local company.
April, 2004
Opened China branch office in Shanghai.
July, 2005
Achieved ISO14001 (JQA NO.EM4855) for all operations and products.
October, 2006
Opened Thailand branch office in Bangkok.
May, 2009
Thailand quenching factory was newly built.
September, 2009
Interns from Germany were accepted.
April, 2011
A local subsidiary in Indonesia was established (PT. NT Indonesia).

Overview of the NT Group

NT Tool, NT Seimitsu, NT Techno, and NT Engineering are the four companies that make up the NT Group. Each possesses advanced core technologies brimming with originality and contributes to the world's manufacturing industry in a full range of fields. Through pooling their wisdom – and occasionally through competition – the four Group companies strive to reach even greater heights in technical strength, development capacity, and quality.



NT SEIMITSU CO.,LTD

NT SEIMITSU is a leading manufacturer of ABS braking system parts and hydraulic suspension components with special ability to machine in sub micron tolerances. All products are in use each day and night, in the air, on the ocean, on the road and in space.

Address:
HEAD OFFICE and FACTORY:
1-7-10, Yoshikawa-cho, Takahama, Aichi, 444-1335 Japan
Tel.81-(0)566-52-5173
Capital: 43.9 million yen
Workforce: 90
Production items:
Parts for brake (ABS) of automobiles, hydraulic parts for automobiles, parts for motorcycles, aircraft parts (engine, hydraulic parts), parts for industrial machines and tools.



NT SEIMITSU (THAILAND) CO.,LTD.

NT SEIMITSU (THAILAND) CO.,LTD.
Eastern Seaboard Industrial Estate 64/151 Moo 4
T.Pluakdaeng A.Pluakdaeng Rayong 21140 Thailand
Tel.66-(0)38-955762-3
PT. NT INDONESIA
Block KK-8 Kawasan Industri MM2100 Cikarang Barat Bekasi 17520 Jawa Barat Indonesia
Tel. 62-(0)21-898-0242





NT TECHNO CO.,LTD

NT TECHNO is an automotive parts manufacturer. The company was awarded the Deming Prize in 1994 and its precision machining technology is highly valued. The "in house" design and manufacturing of equipment provides "state of the art" production lines keeping the company at the forefront of technology.

Address:
5-1, Ronchi-cho,Takahama, Aichi, 444-1314 Japan
Tel.81-(0)566-52-0020
Capital: 48.4 million yen
Workforce: 375
Production items:
Parts of motorcar's automatic transmission, engine and brake.



NT TECHNO USA CORP. (NORTH CAROLINA)

NT TECHNO USA CORP.
3124 Motague Centre Rd., Oxford, NC 27565 U.S.A.
Tel. 1-919-693-3101





NT ENGINEERING CORP.

NT ENGINEERING is a group of skillful engineers. Its main product is an automatic tool correction system that combines bilateral type actuators with an electronic measurement controller. Addressing computerized optimal control with sensor and wireless communication technology as its core competence.

Address:
HEAD OFFICE and FACTORY:
3-3-21, Yoshikawa-cho, Takahama, Aichi, 444-1335 Japan
Tel.81-(0)566-52-0015
Branch Offices: Tokyo and Osaka
Capital: 50 million yen
Workforce: 27
Business line: Manufacturing of tool correction system and measuring control system, sales of NC tooling and tooling for special purpose machines



WORLD CLASS HOLDERS

45,000 standard items and 250,000 Special items supplied by NT.



WORLDWIDE NETWORK

Available in more than 30 countries

North & South America

- U.S.A.
- Canada
- Mexico
- Argentina
- Brazil

Europe and Africa

- Germany
- Israel
- Italy
- U.K.
- Austria
- Netherlands
- Switzerland
- Sweden
- Spain
- Estonia
- Russia
- Turkey
- Hungary
- Finland
- Belgium
- Portugal
- Czech
- South Africa
- France
- Denmark
- Greece

Asia and Oceania

- Japan
- Thailand
- China
- Taiwan
- India
- Vietnam
- Indonesia
- Korea
- Singapore
- Philippines
- Malaysia
- Australia

URL http://www.nttool.com

NT USA CORPORATION

318 Seaboard Lane Suite 301 Franklin TN,37067 U.S.A.

Tel. 1-615-771-1899 Fax. 1-615-771-0121

URL www.nttoolusa.com E-mail sales@nttoolusa.com

NT TOOL CORPORATION

WORLDWIDE NETWORK



Available in more than 30 countries

JAPAN HEAD OFFICE

1-7-10, Yoshikawa-cho, Takahama City, Aichi, 444-1386 Japan

Tel. 81-566-54-0101 Fax. 81-566-54-0111

www.nttool.com E-mail:osb@nttool.co.jp

TOKYO OFFICE
Tel. 81-3-3451-9141 Fax. 81-3-3451-9085

OSAKA OFFICE
Tel. 81-6-6308-1332 Fax. 81-6-6302-0653

HIROSHIMA OFFICE
Tel. 81-82-258-3810 Fax. 81-82-258-3811

IIDA FACTORY
Tel. 81-265-25-5200 Fax. 81-265-25-5225

NT TOOL CORPORATION URL : www.nttool.com

TECHNOMAIL

technomail@nttool.co.jp

EUROPE OFFICE
Siemensstrasse 17A, 61449 Steinbach / Ts., Germany
Tel.49-6171-91639-0 Fax.49-6171-91639-90
www.nttooleurope.com E-mail: info@nttooleurope.com

CHINA OFFICE
Room N, Floor 15, MeiXin building, 728 The Xizangzhong Rd.,
Shanghai 200001 P.R.China
Tel. 86-21-6361-9540 Fax. 86-21-6360-7845
E-mail: nt-shanghai@nttool.co.jp

THAILAND OFFICE / FACTORY
222 Moo 1, Hi-tech Industrial Estate, Banpho, Bang Pa-in,
Ayuthaya 13160 Thailand
Tel. 66-3531-4180 Fax. 66-3531-4182
E-mail: nt_thai@ksc.th.com

INDONESIA OFFICE / FACTORY
Jl. Mitra Raya II Blok E No.3, Kaw. Industri Mitrakarawang
Parungmulya, Ciampel, Karawang, Jawa Barat, 41361 Indonesia
Tel. 62-267-863-1711 Fax. 62-267-863-1712
E-mail: nt-indonesia@nttool.co.jp

ISO 9001 JQA-1372 A-5090 00379681

※Except imported products and products made under OEM contracts.

ISO 14001 JQA-EM4855 JAB CM009 091

●The specification on this catalog may be changed without prior notice.