Tungaloy
Member IMC Group

Keeping the Customer First

Tungaloy Report No. 389-E

TOOLLINE Tooling System

TUNGHOLD

NEW

Tooling system for unique function and wide variation

CONTENTS

DIN 69871-A/B — Page 10

COLLET CHUCK	COLLET CHUCK SHORT TYPE	QUICK CHANGE SYSTEM	BALANCEABLE COLLET CHUCK	TAPPING	END MILL	MODULAR SYSTEM	INDEXABLE MODULAR SYSTEM	POWER CHUCK	HYDRAULIC CHUCK	THERMAL SHRINKING HOLDER
11	12	28	12	27	16	27	28	13	14	19

ADJUSTABLE DRILLING DIAMETER HOLDER	SHELL MILL	FACE MILL	SHELL MILL COMBINATION	JACOBS	CONVERSION ADAPTER	MORSE TAPER
25	20	20	22	23	23	24

DIN 69893 HSK A/E/FM — Page 29

COLLET CHUCK	BALANCEABLE COLLET CHUCK	COLLET CHUCK SHORT TYPE	QUICK CHANGE SYSTEM	END MILL	INDEXABLE MODULAR SYSTEM	MODULAR SYSTEM	SHELL MILL & FACE MILL	SHELL MILL COMBINATION	MORSE TAPER	BLANK	HYDRAULIC CHUCK	POWER CHUCK	THERMAL SHRINKING HOLDER	ADJUSTABLE DRILLING DIAMETER HOLDER
30	34	35	54	41	55	54	48	51	51	56	37	35	43	52

BT MAS-403 — Page 57

COLLET CHUCK	COLLET CHUCK SHORT TYPE	QUICK CHANGE SYSTEM	BALANCEABLE COLLET CHUCK	TAPPING	END MILL	INDEXABLE MODULAR SYSTEM	MODULAR SYSTEM	ADJUST FITBORE
58	59	75	60	74	64	75	74	72

POWER CHUCK	THERMAL SHRINKING HOLDER	SHELL MILL	FACE MILL	SHELL MILL COMBINATION	JACOBS	CONVERSION ADAPTER	MORSE TAPER	HYDRAULIC CHUCK
60	67	68	69	70	70	71	72	62

CAT — Page 76

COLLET CHUCK	COLLET CHUCK SHORT TYPE	QUICK CHANGE SYSTEM	BALANCEABLE COLLET CHUCK	TAPPING	END MILL	INDEXABLE MODULAR SYSTEM	MODULAR SYSTEM	ADJUSTABLE DRILLING DIAMETER HOLDER
77	78	87	78	86	80	87	86	84

Tungaloy
Member IMC Group

CONTENTS

CAT — Page 76

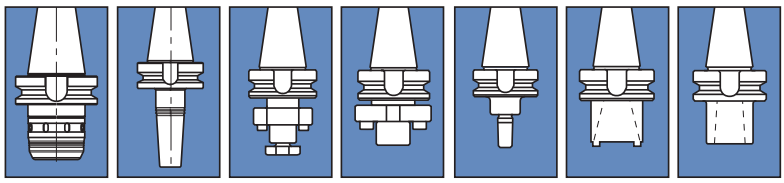

POWER CHUCK	THERMAL SHRINKING HOLDER	SHELL MILL	FACE MILL	JACOBS	CONVERSION ADAPTER	MORSE TAPER
79	81	82	83	83	83	84

DIN 2080 — Page 88

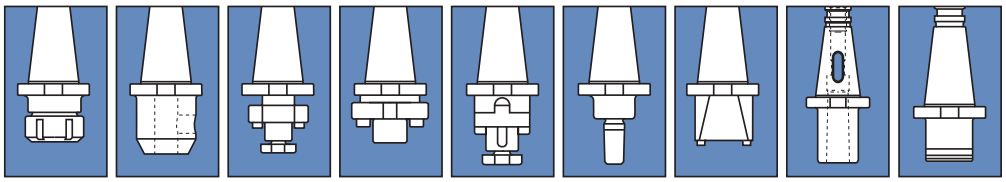

COLLET CHUCK	END MILL	SHELL MILL	FACE MILL	SHELL MILL COMBINATION	JACOBS	CONVERSION ADAPTER	MORSE TAPER	CENTERING PLUG
89	89	90	90	91	91	92	92	93

R-8 - Bridgeport

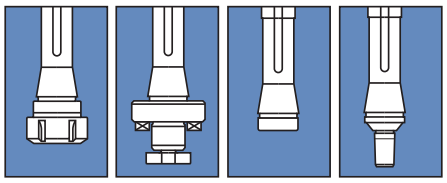

COLLET CHUCK	SHELL MILL	MORSE TAPER	JACOBS
94	94	95	95

Morse Taper

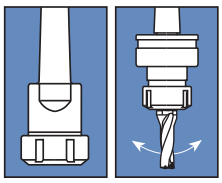

COLLET CHUCK	FLOATING REAMER COLLET CHUCK
102	106

Straight Shank

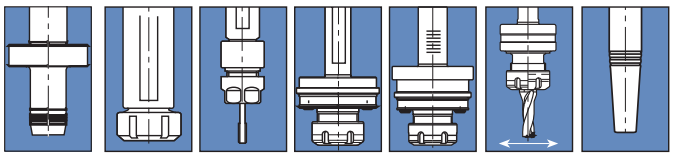

HYDRAULIC CHUCK	COLLET CHUCK	TAPPING	CENTER ALIGNMENT COLLET CHUCK ST TYPE	CENTER ALIGNMENT COLLET CHUCK VDI TYPE	FLOATING REAMER COLLET CHUCK	THERMAL SHRINKING HOLDER
100	96	101	102	104	106	99

TungGTI - Tapping Attachment

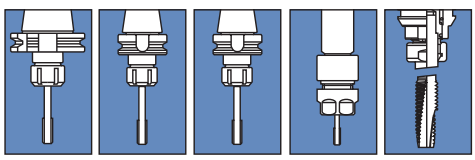

DIN69871	BT MAS-403	CAT	STRAIGHT SHANK	ER COLLET
27	74	86	101	142

TunFlex - Indexable Modular System

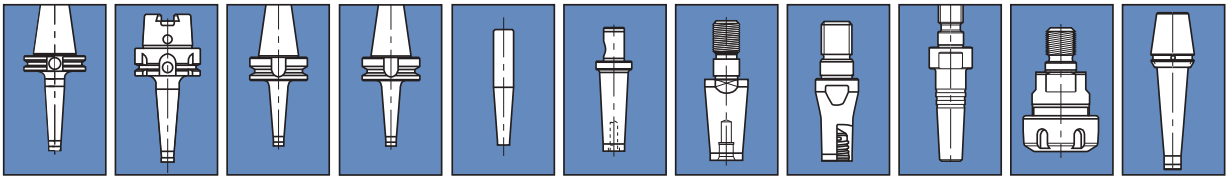

DIN69871	HSK	BT MAS-403	CAT	STRAIGHT SHANK	MODULAR SYSTEM ADAPTER	REDUCER	TUNG-MEISTER ADAPTER	TERMAL SHRINKING ADAPTER	COLLET CHUCK	ER COLLET
28	55	75	87	108	108	109	110	111	110	130

TungGyro - Center Alignment Holder

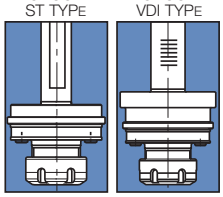

CENTER ALIGNMENT COLLET CHUCK ST TYPE	CENTER ALIGNMENT COLLET CHUCK VDI TYPE
102	104

CONTENTS

TungFit Modular Tooling System

DIN69871	HSK	BT MAS-403	CAT	EXTENSION	SHELL MILL	COLLET CHUCK
27	54	74	86	112	112	112

GFI - Floating Reamer Collet Chuck

STRAIGHT SHANK	MORSE TAPER
106	104

Pull Stud

PULL STUD
144

ER Collets — Pages 113

SPR SPRING COLLET	SPR AA SPRING COLLET	SEAL JET SPRING COLLETS	SEAL JET 2 SPRING COLLETS	KITS, SET SPRING COLLETS	INDEXABLE MODULAR SYSTEM	SC SPR/ SEAL COLLET	SC HYDRO COLLET	TERMAL SHRINKING	TAPPING
116	117	118	119	120	130	122	125	133	142

Accessories

NUT	WRENCH	LOCK SCREW	LOCK SCREW	DRIVING RING	PRESET SCREW HYDRO	TEST BAR HYDRO
147	148	150	150	151	126	126

TERMAL SHRINKING • HEATING DEVICE — Pages 131

DIN 69871 SRKIN	DIN 69871 SRK	HSK SRK/SRKIN	BT MAS-403 SRKIN/SRK	CAT SRKIN / SRK	STRAIGHT SHANK	INDEXABLE MODULAR SYSTEM	ER-SRK	INDUCTION HEATING DEVICE	HEATING DEVICE	QUICK CHANGE SYSTEM
19	19	43	67	81	99	111	133	137	138	140

EASYLOCK Clamping Torque Control DEVICE

AUTO CLAMP DEVICE
153

Fixtures

CAT, ISO, BT-MASS, DIN69871	HSK A, C, E, F
152	152

Tungaloy Member IMC Group

Tooling system TUNGHOLD Digest

Collet chuck

TUNGSHORT

Holder available in 3 types: standard, short and high rigidity holder. Sealed collets are available in 3 types: precision, high precision and internal / external coolant type.

Power chuck

TUNGMAX

- High rigidity clamping with low torque.

Hydraulic chuck

TUNGHYDRO

- High runout accuracy of less than 0.003 mm.

Quick change system

TUNGCLICK

- Quick and easy tool change system.

Modular tooling system

TUNGFLEX

- Works with various overhang lengths.
- General style.

TUNGFIT

- Highly rigid clamping.
- Quick-change style.

TUNGDRILLTWISTED Adjustable holders

TUNGBORE Adjustable drilling diameter holder

- The diameter can be adjusted when used on a machining center.

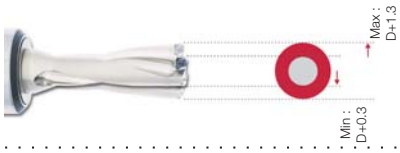

Centering tooling system

TUNGGYRO Center alignment collet chuck

- Adjusts the runout of drilling tools on the lathe.

TUNGGFI Floating reamer collet chuck

- Automatically adjusts the misalignment between reamer and prepared hole.

Balanceable collet chuck

TUNGBALANCE

- Adjusts dynamic balance for high speed machining.

Tapping attachment

TUNGGTI

- Self-adjustment function ensures high accuracy.

Thermal shrinking holder

TUNGSHRINK

- Available in various adapters for quick changovers.

EASYLOCK Electrical nut-clamping torque control device

- Enables easy tool clamping / unclamping and maintains collet chuck accuracy.

Product introduction

TUNGSHORT

Feature

- Short overhang.
- Applicable for standard ER collets.
- Provides high gripping force and less runout with short overhang.
- Balanced to G2.5, 20,000 min^{-1}
- Symmetric design for high speed machining.

TUNGMAX

Feature

- Provides extremely high gripping force with only a small tightening torque.
- High runout accuracy at 100mm. Over hang is 0.009 mm
- High stiffness is achieved with the clamping mechanism that utilises the face contact between clamping nut and the face of the shank.
- The highly rigid system prolongs tool life considerably.
- Prevents interference with the work piece due to the slim design.
- Preset screws available for all SC straight collets for positioning of the tool.
- Produced from a special steel for vibration damping.
- Sealed nut structure.
- No axial drawback of the tool shank when chuck is tightened.

Structure

① Shallow tapered front end cone
② Clamping nut
③ Helical slot
④ Needle bearing
⑤ Front Seal
⑥ Ventilation bore (thread M4)
⑦ Preset screw thread
⑧ Cap screw (for the preset screw)
⑨ Preset screw
⑩ Ground bore
⑪ Grip groove (for collet release)

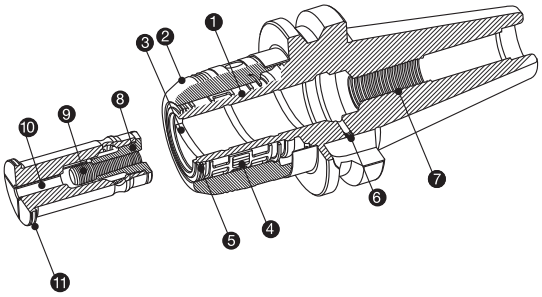

TUNGHYDRO

Feature

- High runout accuracy of less than 0.003 mm
- Very low torque required to activate the clamping mechanism.
- Easy tool overhang presetting by using an internal preset screw.
- Symmetrical and balanced design for high speed machining of up to 15,000 min^{-1}
- Very convenient and safe tool change on the machine.
- Quick and easy operation for clamping and unclamping.

Operating Instructions

- Clean any grease and dirt from the chuck mounting hole and the tool shank. Insert the tool shank up to the stopper. Make sure that the minimum chucking length is maintained.
- Do not attempt to clamp the chuck without a tool. It may break the clamping sleeve.
- Tools with cylindrical shanks in accordance with DIN1835 and DIN6535 shape (HA) and B (HB) up to 20 mm diameters should be manufactured according to h6 tolerance and Ra = min 0.3 ground.
- Tools with DIN6535 HE (whistle notch) shanks are not recommended. These may damage the chucking hole.

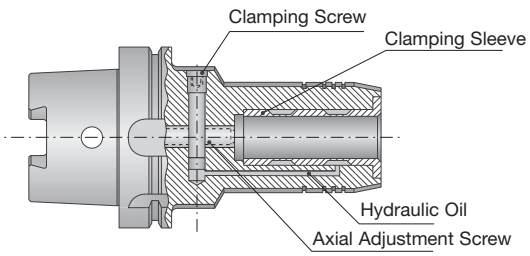

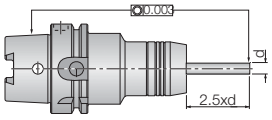

Tungaloy
Member IMC Group

TUNGCLICK

Feature

- Assembly structure: the taper goes inside the holder, achieving short overhang.
- High rigidity and high runout due to the short overhang.
- Taper and face make contact for maximum rigidity.
- Balanced to G2.5, 20,000 min^{-1}
- Quick changing: the taper shank and the holder connect in a quick half turn.

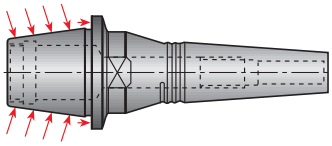

TUNGFLEX

Feature

- Screw clamp head type promotes easy tool management.
- Suitable for deep machining of metal molds due to the slim structure.
- Provides wide machining variations with numerous combinations.
- Provides high rigidity similar to integrated type holders.

TUNGFIT

Feature

- Provides high rigidity comparable to a solid part credit to the elastic deformation properties of the clamping system.
- Reduces vibration by taper and face contact.
- Easy clamping with only one screw.

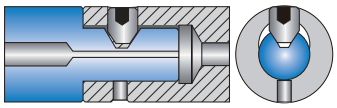

TUNGBORE

Feature

- Enables the diameter of TungdrillTwisted (TDX) to be adjusted. Diameter adjusting range of -0.3 ~ +1.3 mm
- With TungBore, standard TDX drills can cover the usage of special diameter drills.

* Adjustable range of diameter in TDX drill is different by each item. Therefore, please refer to the maximum offset value shown in TDX drill leaflet.

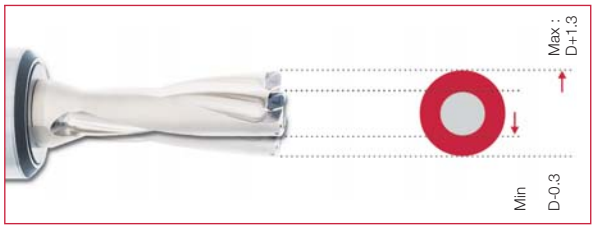

Operating Instructions

① Fix the TDX drill with the clamping screw.
② Adjust the screw "A". Preset should be made on a pre-setter to -0.2 mm from the required diameter. Tighten the clamp screw "B".
③ On the machine, make a test cut.
④ Measure the bore diameter.
⑤ Make the adjustment to the desired diameter on the machine with dial indicator or on the pre-setter.
⑥ Loosen the clamping screw.
⑦ Adjust to the required diameter
("Desired diameter" - "Measured diameter") / 2 = "Adjusted amount"
⑧ Tighten the clamping screw.

A: Clamp screw
B: Adjust screw

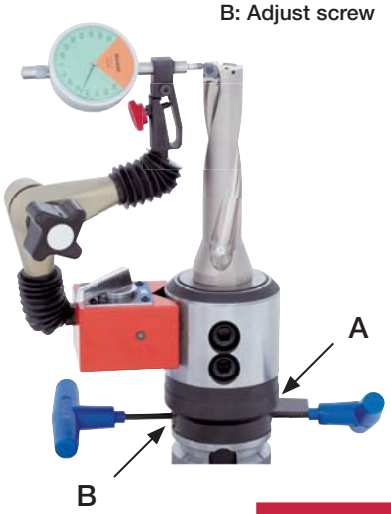

Feature

- Easy adjustment for correcting misalignment between drill and workpiece on the lathe.
- Improves cutting accuracy and tool life due to highly precise installation.
- Increases the cutting speed and feed rate by accurate adjustment Reduces the total machining time.
- Reduces damage and prolongs the tool life.

Operating Instructions

Range of correction

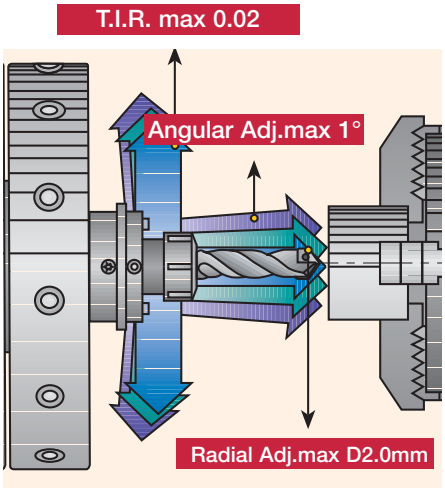

1.

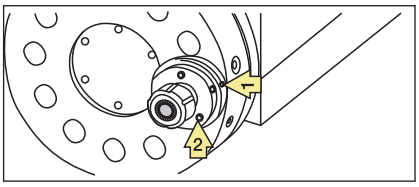

① Install TUNGGYRO in the turret of lathe.
② Tighten the screw of No.1 and No.2 (3PC) completely.

2.

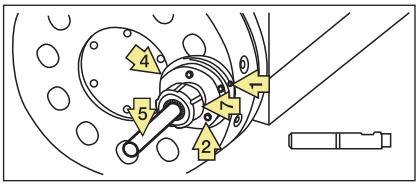

① Insert the gauge pin (No.5) through ER collet of TUNGGYRO and tighten the nut (No.7) (Use the special wrench only)
② Loosen each No.1, No.2 (3PC) screw until the nose piece of set ring of No.3 (for angle adjustment) and No.4 move freely. (Refer to item 4 for the position of No.3 set ring.)

3.

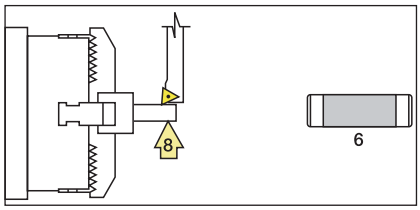

① Hold a soft material with the chuck of the lathe and process it to tolerance h5. (the same diameter as No.5 gaugepin)
The length of the processed part should be 1/2 of the gauge pin.
② Place the test bush of No.6 on the processed material.

4.

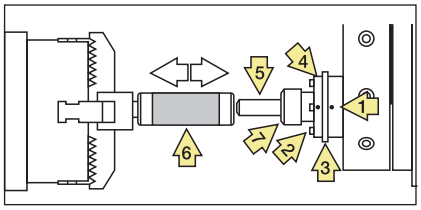

① Set TUNGGYRO on the turret.
② Keep the distance between the gauge pin (No.5) and the test bush (No.6) for 5 ~ 10 mm and move it to 0 point. (Drill processing point of X = 0 or position of main axis)
③ Move the Z axis of the turret and insert the test bar (No.5) into the test bush (No.6)
As for the inserted amount, the spaces between the roller end faces of test bush (No.6) and clamping nut (No.7) should be set for10 mm
④ Confirm if the test bush (No.6) moves freely.
⑤ Lightly tighten the screw (No.1) until the test bush (No.6) barely moves.
⑥ Adjust the set ring (No.3) so that the test bush (No.6) may move smoothly.
⑦ Tighten the 3 screws (No.2)
The correction is completed if the test Bush (No.6) moves smoothly.

TUNGGFI

Feature

- Provides high accuracy reaming and extended tool life due to the unique floating mechanism.
- The radial self-floating mechanism corrects the misalignment between reamer and work piece hole.

Radial Float

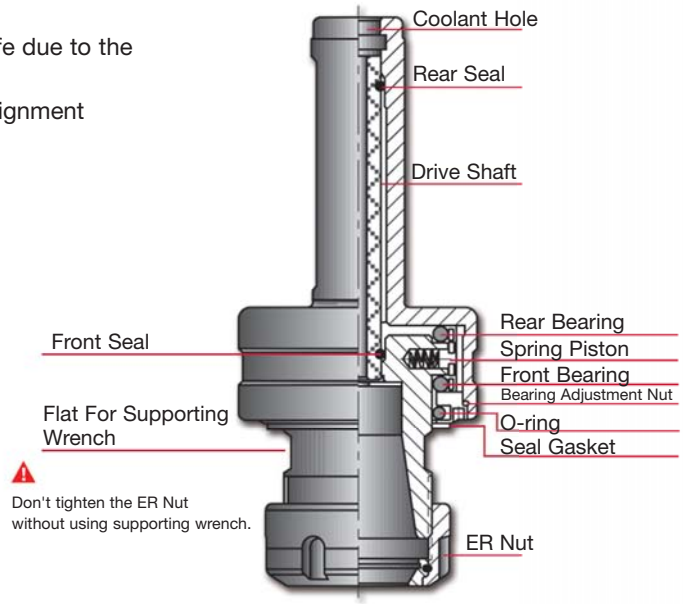

TUNGBALANCE

Feature

- Easy to adjust dynamic balance. It is possible to correct it by simply turning the ring and adjusting the unbalanced amount measured with the balance measuring instrument.
- Corrects unbalance up to:
  TUNGBALANCE Collet Chuck 61 gr. x mm
  TUNGBALANCE Top Nut 54 gr. x mm
- Simple balancing procedure on all types of balancing machines.
- An existing collet chuck can be changed to the balance holder by simply exchanging the nut.

Attention 1 Do not use Weldon shanks.

Attention 2 For extremely high balance levels, tools with even number of flutes are recommended.

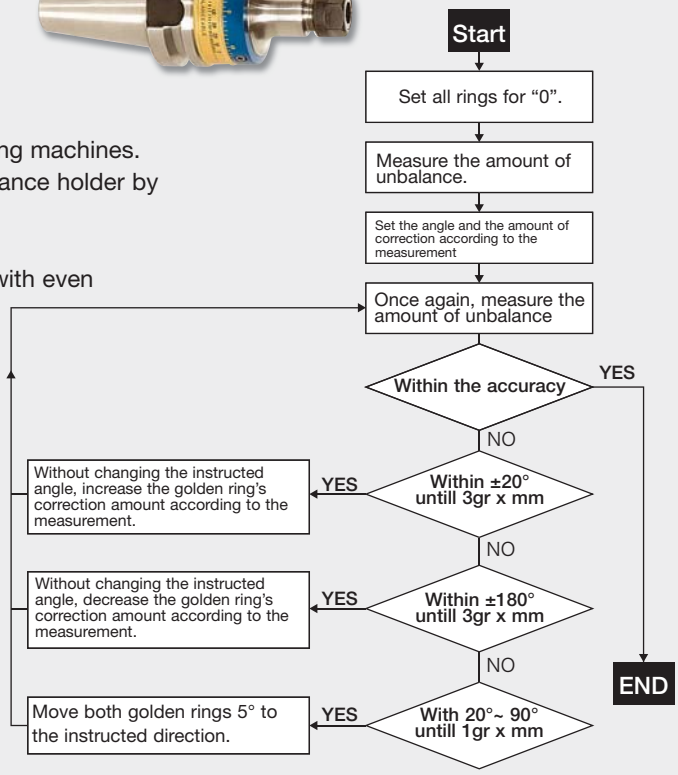

set example

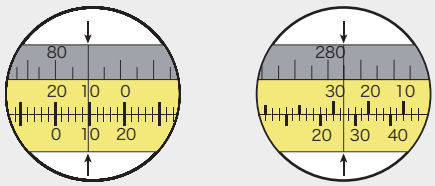

10 gr x mm, 100° 27 gr x mm, 285°

TUNGGTI

Feature

- Contains the mechanisms of tension, compression, and floating.
- No tap collets necessary.
- Compact geometry with high rigidity.

DIN69871 • Shank Standard

DIN69871 Form A/B

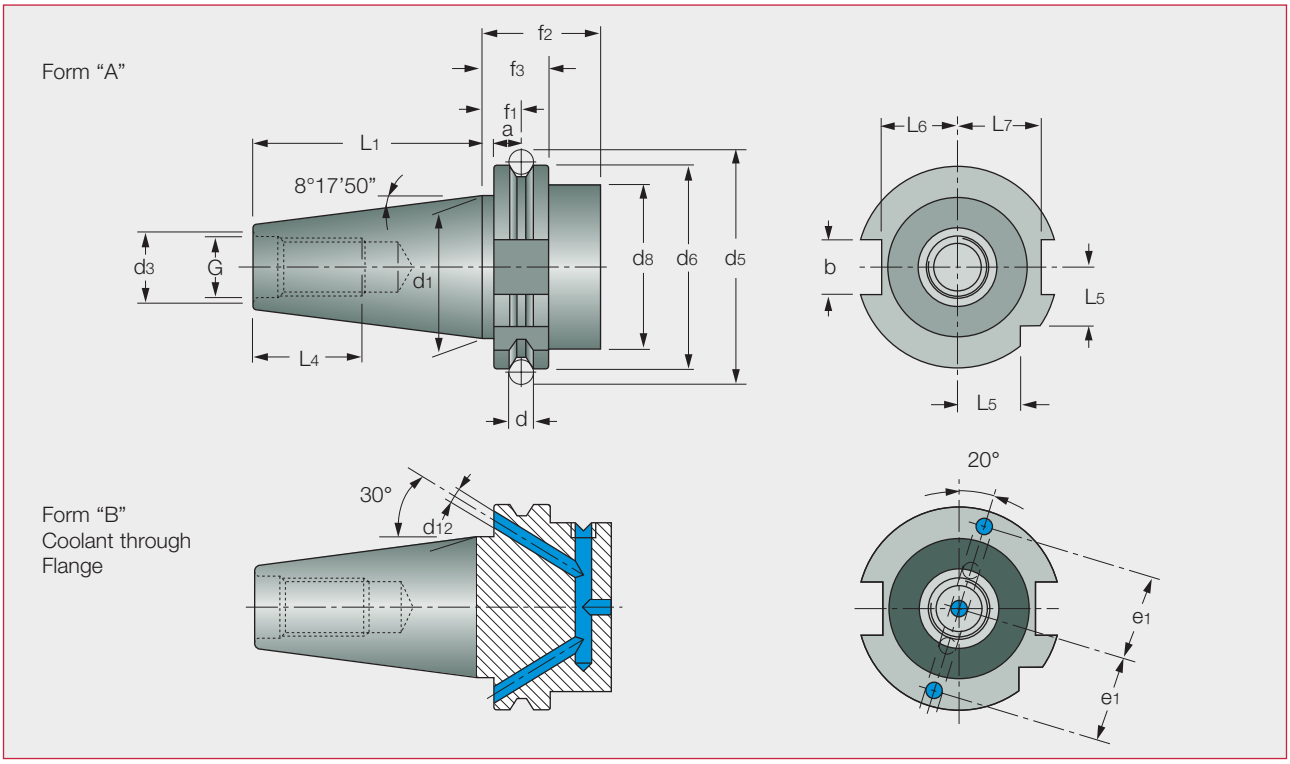

(Unit: mm)

Shank	a±0.1	b (H_{12})	d	d_1	G	d_3 (H_7)	d_5 ±0.05	d_6	d_8 max	f_1 ±0.1
SK 30	3.2	16.1	7	31.75	M12	13	59.30	50	45	11.1
SK 40	3.2	16.1	7	44.45	M16	17	72.30	63.55	50	11.1
SK 30	3.2	25.7	7	69.85	M24	25	107.25	97.50	80	11.1

(Unit: mm)

Shank	f_2 min.	f_3 -0.1	L_1 -0.3	L_4 min.	L_5 -0.3	L_6 -0.4	L_7 -0.4	e1 ±0.1	d_{12}	TAPER AT3
SK 30	35	19.1	47.80	24	15.0	16.4	19.0	21	4	0.002
SK 40	35	19.1	68.40	32	18.5	22.8	25.0	27	4	0.003
SK 50	35	19.1	101.75	47	30.0	35.5	37.7	42	6	0.004

Tungaloy
Member IMC Group

DIN69871 • Collet Chuck Holder

DIN69871-ER

G2.5
20,000 min-1

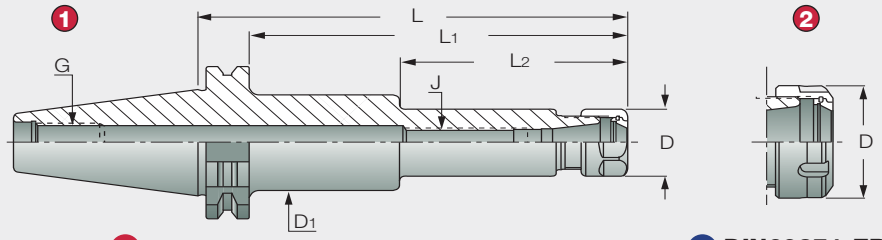

A DIN69871-ER16-20 B DIN69871-ER25-50

1 DIN69871 Form A/B
2 DIN6499

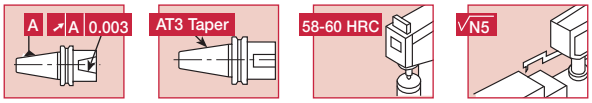

A DIN69871-ER ER Collet Chuck Holder

(Unit: mm)

Cat. No.	Range	L	L1	L2	D	D1	G	J
DIN69871 30 ER16X 63 (1)	0.5-10	63	43.9	28	28	-	M12	M10
DIN69871 40 ER16X 63	0.5-10	63	43.9	-	28	-	M16	M12
DIN69871 40 ER16X100	0.5-10	100	80.9	-	28	-	M16	M12
DIN69871 40 ER16X160	0.5-10	160	140.9	85	28	40	M16	M12
DIN69871 40 ER20X 63	1-13	63	43.9	-	34	-	M16	M12
DIN69871 40 ER20X100	1-13	100	80.9	-	34	-	M16	M12
DIN69871 40 ER20X160	1-13	160	140.9	91	34	44	M16	M12
DIN69871 50 ER16X100 (1)	0.5-10	100	80.9	-	28	-	M24	M12
DIN69871 50 ER16X160 (1)	0.5-10	160	140.9	85	28	40	M24	M12
DIN69871 50 ER16X200 (1)	0.5-10	200	180.9	110	28	40	M24	M10
DIN69871 50 ER20X100 (1)	1-13	100	80.9	-	34	-	M24	M12
DIN69871 50 ER20X160 (1)	1-13	160	140.9	86	34	45	M24	M12

(1) Balance to G6.3 12,000 min-1
Add B for coolant through the flange.

B DIN69871-ER ER Collet Chuck Holder

(Unit: mm)

Cat. No.	Range	L	L1	L2	D	D1	G	J
DIN69871 30 ER32X 65 (1)	2-20	65	45.9	32.0	50	40.4	M12	M18x1.5
DIN69871 40 ER25X 65	1-16	65	45.9	28.0	42	32.4	M16	M16x2
DIN69871 40 ER25X100	1-16	100	80.9	-	42	-	M16	M16x2
DIN69871 40 ER25X150	1-16	150	130.9	-	42	-	M16	M16x2
DIN69871 40 ER32X 65	2-20	65	45.9	32.0	50	40.4	M16	M22x1.5
DIN69871 40 ER32X100	2-20	100	80.9	35.0	50	49.0	M16	M22x1.5
DIN69871 40 ER32X150	2-20	150	130.9	35.0	50	49.0	M16	M22x1.5
DIN69871 40 ER40X 70	3-26	70	50.9	32.0	63	50.4	M16	M28x1.5
DIN69871 40 ER40X100	3-26	100	80.9	32.0	63	50.4	M16	M28x1.5
DIN69871 50 ER25X100 (1)	1-16	100	80.9	-	42	-	M24	M16x2
DIN69871 50 ER25X150 (1)	1-16	150	130.9	80.9	42	50.0	M24	M16x2
DIN69871 50 ER25X200 (1)	1-16	200	180.9	85.0	42	55.0	M24	M16x2
DIN69871 50 ER32X100 (1)	2-20	100	80.9	-	50	-	M24	M22x1.5
DIN69871 50 ER32X150 (1)	2-20	150	130.9	-	50	-	M24	M22x1.5
DIN69871 50 ER32X200 (1)	2-20	200	180.9	-	50	-	M24	M22x1.5
DIN69871 50 ER40X100 (1)	3-26	100	80.9	-	63	-	M24	M28x1.5
DIN69871 50 ER40X150 (1)	3-26	150	130.9	-	63	-	M24	M28x1.5
DIN69871 50 ER40X200 (1)	3-26	200	180.9	-	63	-	M24	M28x1.5
DIN69871 50 ER50X100 (1)	10-34	100	80.9	-	78	-	M24	M36x1.5
DIN69871 50 ER50X150 (1)	10-34	150	130.9	-	78	-	M24	M36x1.5

(1) Balance to G6.3 12,000 min-1
Add B for coolant through the flange.

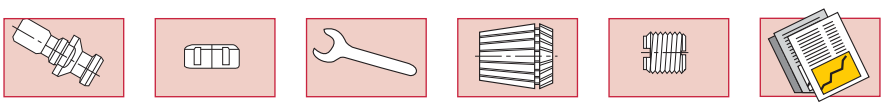

Pull Stud	Nut	Wrench	ER Collet	Preset Screw	User Guide
Page 144	147	148	116 - 119	149	113 ~ 115

A DIN69871-ER-SHORT

G2.5
20,000 min-1

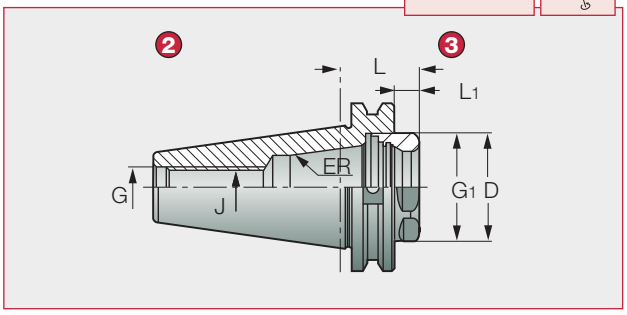

B DIN69871-ER-BALANCE

G2.5(1)
20,000 min-1

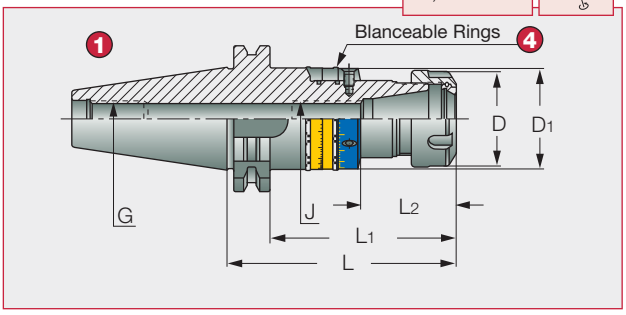

1. DIN69871 Form A
2. DIN69871 Form A/B
3. DIN6499 ER-SHORT
4. DIN6499 ER-BALANCE

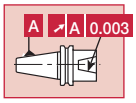

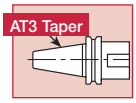

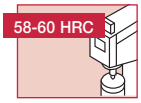

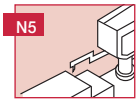

A DIN69871-ER-SHORT Short ER Collet Chuck Holder

(Unit: mm)

Cat. No.	Range	L	L1	D	G1	G	J
DIN69871 40 ER32 SHORT	2-20	28.6	9.5	40	M40x1.5	M16	M16
DIN69871 40 ER40 SHORT	3-26	28.6	9.5	40	M50x1.5	M16	M16
DIN69871 50 ER32 SHORT	2-20	28.6	9.5	40	M40x1.5	M24	M22x1.5
DIN69871 50 ER40 SHORT	3-26	28.6	9.5	50	M50x1.5	M24	M28x1.5

Add B for coolant through the flange.

B DIN69871-ER-BALANCE Blanceable ER Collet Chuck Holder

(Unit: mm)

Cat. No.	Range	L	L1	L2	D	D1	G	J
DIN69871 40 ER16X100 BIN	0.5-10	100	80.9	44	28	44	M16	M10
DIN69871 40 ER16X160 BIN	0.5-10	160	140.9	85	28	44	M16	M10
DIN69871 40 ER20X100 BIN	1.0-13	100	80.9	51	34	44	M16	M12
DIN69871 40 ER20X160 BIN	1.0-13	160	140.9	87	34	44	M16	M12
DIN69871 40 ER25X100 BIN	1.0-16	100	80.9	51	42	44	M16	M16x1.5
DIN69871 40 ER25X160 BIN	1.0-16	160	140.9	88	42	44	M16	M16x1.5
DIN69871 40 ER32X100 BIN	2.0-20	100	80.9	36	50	60	M16	M22x1.5
DIN69871 40 ER32X160 BIN	2.0-20	160	140.9	96	50	60	M16	M22x1.5
DIN69871 40 ER40X100 BIN	3.0-26	100	80.9	36	63	60	M16	M28x1.5

(1) Blanced to G2.5 20,000 min-1

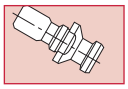
Pull Stud 144

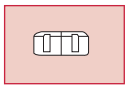
Nut 147

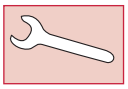
Wrench 148

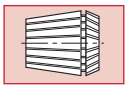
ER Collet 116 - 119

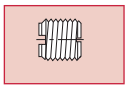
Preset Screw 149

User Guide 113 - 115, 9

Page

Tungaloy Member IMC Group

DIN69871 • TUNGMAX • Endmill Chuck Holder

DIN69871-MAX

G6.3
10,000 min-1

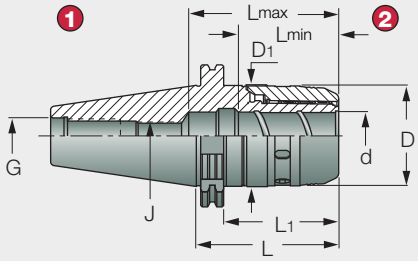

1 **DIN69871 Form A/B**
2 **TungMax**

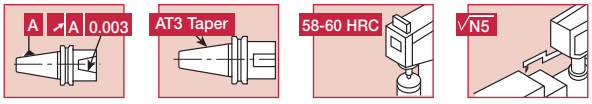

DIN69871-MAX Power Chuck Holder

(Unit: mm)

Cat. No.	Range	d	D	D1	L	L1	Lmin	Lmax	J	G
DIN69871 40 MAXIN 20x95	6-20	20	51	53	95	76	56	69	M16	M16
DIN69871 40 MAXIN 32x106	6-32	32	69	70	106	87	70	83	M16	M16
DIN69871 50 MAXIN 20x105 (1)	6-20	20	51	53	105	86	56	69	M16	M24
DIN69871 50 MAXIN 32x100 (1)	6-32	32	69	70	100	81	70	84	M20x2	M24
DIN69871 50 MAXIN 32x135 (1)	6-32	32	69	70	135	116	71	85	M20x2	M24

Add B for coolant through the flange.
(1) Balanced to G6.3 8,000 min-1

DIN69871-MAX-BALANCE

G6.3
10,000 min-1

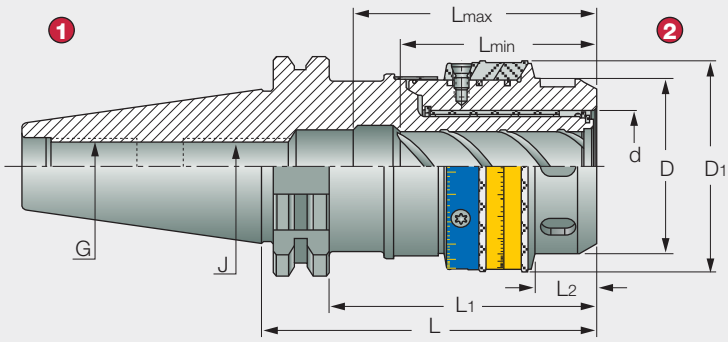

1 **DIN69871 Form A**
2 **TungBalance**

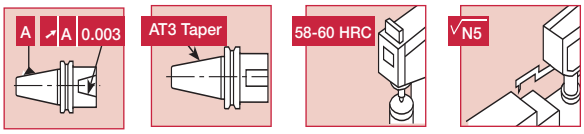

DIN69871-MAX-BALANCE Balanceable Power Chuck Holder

(Unit: mm)

Cat. No.	Ranged	D	D1	L	L1	L2	Lmin	Lmax	J	G
DIN69871 40 MAXIN 20X 95 BIN (1)	6-20 20	50.5	60.8	95	76	17.5	56	69	M16	M16
DIN69871 40 MAXI 32X106 BIN (1)	6-32 32	68.5	79.8	106	87	24.9	70	83	M16	M16
DIN69871 50 MAXIN 20X105 BIN (1)	6-20 20	50.5	60.8	105	86	17.5	56	69	M16	M24
DIN69871 50 MAXIN 32X100 BIN (2)	6-32 32	68.5	79.8	100	81	24.9	70	84	M20X2	M24

(1) Chucks with taper size 40 can be balanced by the balancing ring up to G2.5 at 20,000 min-1
(2) Chucks with taper size 50 can be balanced by the balancing ring up to G2.5 at 18,000 min-1

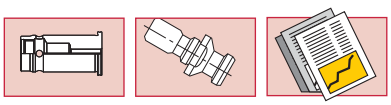

	SC Collet	Pull Stud	User Guide
Page	122	144	6, 9

DIN69871-HYDRO

G6.3
SK 30,40 = 12,000 min^{-1}
SK 50 = 8,000 min^{-1}

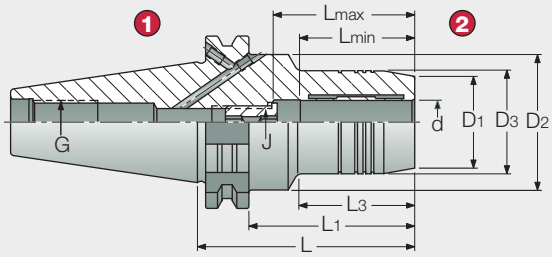

1 **DIN69871 Form A/B**
2 **TungHydro**

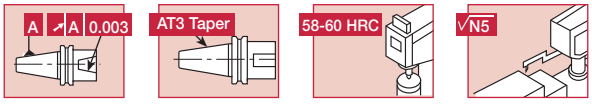

DIN69871-HYDRO Hydraulic Chuck Holder

(Unit: mm)

Cat. No.	d	D1	D3	D2	L	L1	L3	Lmin	Lmax	J	G
DIN69871 30 HYDRO 6X 60	6	23	26	45	60	41	25	27	37	M5	M12
DIN69871 30 HYDRO 8X 64	8	25	28	45	64	45	29	27	37	M6	
DIN69871 30 HYDRO 10X 72	10	27	30	45	72	45	35	32	42	M8x1	
DIN69871 30 HYDRO 12X 72	12	29	32	45	72	53	43	37	47	M10x1	
DIN69871 30 HYDRO 14X 72	14	30	34	45	72	53	42	37	47	M10x1	
DIN69871 30 HYDRO 16X 90	16	34	38	45	90	71	43	42	52	M12x1	
DIN69871 30 HYDRO 18X 90	18	36	40	45	90	71	43	42	52	M12x1	
DIN69871 30 HYDRO 20X 90	20	38	42	42	90	71	-	42	52	M12x1	
DIN69871 40 HYDRO 6X 68	6	23	26	50	68	49	33	27	37	M5	M16
DIN69871 40 HYDRO 8X 68	8	25	28	50	68	49	33	27	37	M6	
DIN69871 40 HYDRO 10X 72	10	27	30	50	72	53	37	32	42	M8x1	
DIN69871 40 HYDRO 12X 77	12	29	32	50	77	58	42	37	47	M10x1	
DIN69871 40 HYDRO 14X 77	14	30	34	50	77	58	42	37	47	M10x1	
DIN69871 40 HYDRO 16X 80	16	34	38	50	80	61	43	42	52	M12x1	
DIN69871 40 HYDRO 18X 80	18	36	40	50	80	61	43	42	52	M12x1	
DIN69871 40 HYDRO 20X 82	20	38	42	50	82	63	47	42	52	M12x1	
DIN69871 40 HYDRO 25X117	25	46	50	63	117	98	51	48	58	M16x1	
DIN69871 40 HYDRO 32X117	32	56	60	63	117	98	56	52	62	M16x1	
DIN69871 50 HYDRO 6X 68	6	23	26	80	68	49	33	27	37	M5	M24
DIN69871 50 HYDRO 8X 68	8	25	28	80	68	49	33	27	37	M6	
DIN69871 50 HYDRO 10X 72	10	27	30	80	72	53	37	32	42	M8x1	
DIN69871 50 HYDRO 12X 77	12	29	32	80	77	58	42	37	47	M10x1	
DIN69871 50 HYDRO 14X 77	14	30	34	80	77	58	42	37	47	M10x1	
DIN69871 50 HYDRO 16X 80	16	34	38	80	80	61	45	42	52	M12x1	
DIN69871 50 HYDRO 18X 80	18	36	40	80	80	61	45	42	52	M12x1	
DIN69871 50 HYDRO 20X 82	20	38	42	80	82	63	47	42	52	M16x1	
DIN69871 50 HYDRO 25X 87	25	46	50	80	87	68	52	48	58	M16x1	
DIN69871 50 HYDRO 32X 91	32	56	60	80	91	72	56	54	64	M16x1	

Clamping wrench (wrench HYDRO HEX 4) should be ordered separately.
Note: Available are reduction sleeves for 12, 20, 25 and 32 mm bore diameters.
Chucking forces will significantly reduce if reduction sleeves are used (ordered separately).

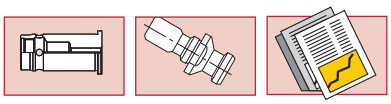

	SC Collet	Pull Stud	User Guide
Page	122	144	6, 127 - 129

Tungaloy
Member IMC Group

DIN69871-HYDRO

G6.3
SK 40 = 12,000 min^{-1}
SK 50 = 8,000 min^{-1}

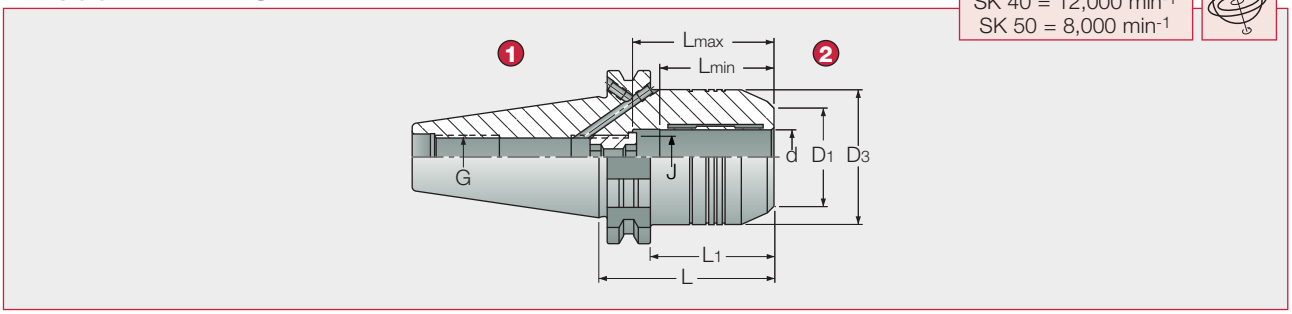

1 **DIN69871 Form A/B**
2 **TungHydro**

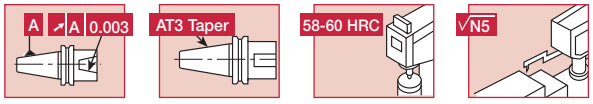

DIN69871-HYDRO Hydraulic Chuck Holder (Heavy Duty)

(Unit: mm)

Cat. No.	d	D1	D3	L	L1	Lmin	Lmax	J	G
DIN69871 40 HYDRO 20X 64.5	20	40	49.5	64.5	45	42	52	M16x1	M16
DIN69871 50 HYDRO 32X 81	32	56	72	81	62	54	64	M16x1	M24

Clamping wrench (wrench HYDRO HEX 4) should be ordered separately.
Note: Available are reduction sleeves for 12, 20, 25 and 32 mm bore diameters.
Chucking forces will significantly reduce if reduction sleeves are used (ordered separately).

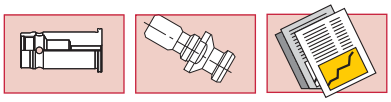

	SC Collet	Pull Stud	User Guide
Page	122	144	6, 127 - 129

DIN69871 • Side Lock Endmill Chuck Holder

A DIN69871-EM

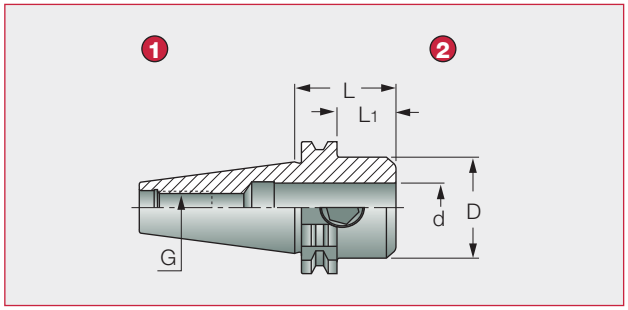

B DIN69871-EM-C

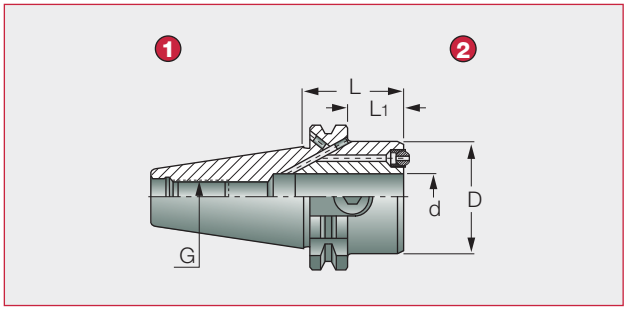

1 **DIN69871 Form A/B**
2 **DIN6359**
DIN1835 Form B (Weldon type)

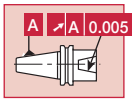

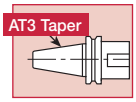

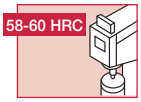

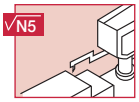

A DIN69871-EM Short Endmill Chuck Holder (Weldon type)

(Unit: mm)

Cat. No.	d	D	L	L_1	G
DIN69871 40 EM10X 45	10	35	45	25.9	M16
DIN69871 40 EM12X 45	12	42	45	25.9	M16
DIN69871 40 EM14X 45	14	44	45	25.9	M16
DIN69871 40 EM16X 45	16	48	45	25.9	M16
DIN69871 40 EM18X 45	18	49	45	25.9	M16
DIN69871 40 EM20X 45	20	49	45	25.9	M16
DIN69871 40 EM25X 45	25	49	45	25.9	M16

Add B for coolant through the flange.

B DIN69871-EM-C Short Endmill Chuck Holder with Adjustable Nozzle (Weldon type)

(Unit: mm)

Cat. No.	d	D	L	L_1	G
DIN69871 40 EM 6X 50C	6	32	50	30.9	M16
DIN69871 40 EM 8X 50C	8	32	50	30.9	M16
DIN69871 40 EM10X 45C	10	35	45	25.9	M16
DIN69871 40 EM12X 45C	12	42	45	25.9	M16
DIN69871 40 EM16X 45C	16	48	45	25.9	M16
DIN69871 40 EM20X 45C	20	49	45	25.9	M16
DIN69871 40 EM25X 45C	25	55	45	25.9	M16

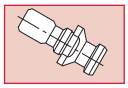

Pull Stud

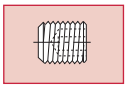

Lock Screw

Page ☞ 144 150

Tungaloy
Member IMC Group

DIN69871 • Side Lock Endmill Chuck Holder

DIN69871-EM

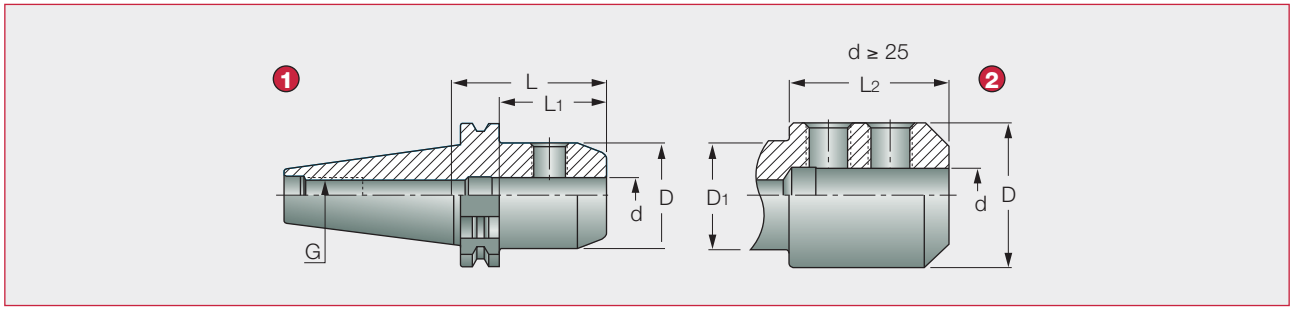

1 **DIN6871 Form A/B**
2 **DIN6359**
DIN1835 Form B (Weldon type)

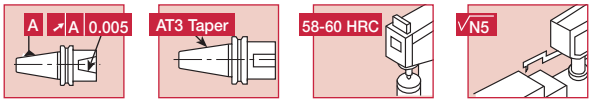

DIN69871-EM Endmill chuck Holder (Weldon type)

(Unit: mm)

Cat. No.	d	D	D1	L	L1	L2	G
DIN69871 30 EM 6X 50	6	26	-	50	30.9	-	M12
DIN69871 30 EM 8X 50	8	28	-	50	30.9	-	M12
DIN69871 30 EM10X 50	10	35	-	50	30.9	-	M12
DIN69871 30 EM12X 50	12	42	-	50	30.9	-	M12
DIN69871 30 EM14X 63	14	44	-	63	43.9	-	M12
DIN69871 30 EM16X 63	16	48	44.9	63	43.9	28.0	M12
DIN69871 30 EM18X 72	18	50	44.9	72	52.9	37.0	M12
DIN69871 30 EM20X 72	20	52	44.0	72	52.9	37.0	M12
DIN69871 40 EM 6X 50	6	25	-	50	30.9	-	M16
DIN69871 40 EM 8X 50	8	28	-	50	30.9	-	M16
DIN69871 40 EM10X 50	10	35	-	50	30.9	-	M16
DIN69871 40 EM12X 50	12	42	-	50	30.9	-	M16
DIN69871 40 EM14X 63	14	44	-	63	43.9	-	M16
DIN69871 40 EM16X 63	16	48	-	63	43.9	-	M16
DIN69871 40 EM18X 63	18	50	49.0	63	43.9	28.5	M16
DIN69871 40 EM20X 63	20	52	49.0	63	43.9	28.5	M16
DIN69871 40 EM25X100	25	65	49.0	100	80.9	65.0	M16
DIN69871 40 EM32X100	32	71	49.0	100	80.9	65.0	M16
DIN69871 50 EM 6X 63	3	25	-	63	43.9	-	M24
DIN69871 50 EM 8X 63	8	28	-	63	43.9	-	M24
DIN69871 50 EM10X 63	10	35	-	63	43.9	-	M24
DIN69871 50 EM12X 63	12	42	-	63	43.9	-	M24
DIN69871 50 EM14X 63	14	44	-	63	43.9	-	M24
DIN69871 50 EM16X 63	16	48	-	63	43.9	-	M24
DIN69871 50 EM18X 63	18	50	-	63	43.9	-	M24
DIN69871 50 EM20X 63	20	52	-	63	43.9	-	M24
DIN69871 50 EM25X 80	25	65	-	80	60.9	-	M24
DIN69871 50 EM32X100	32	72	-	100	80.9	-	M24
DIN69871 50 EM40X100	40	90	79.9	100	80.9	43.0	M24
DIN69871 50 EM50X125	50	98	79.9	125	105.9	90.0	M24

Add B for coolant through the flange.

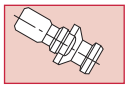
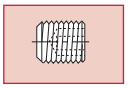

Pull Stud
Lock Screw
Page 144 150

DIN69871 • Side Lock Endmill Chuck Holder

DIN69871-EM-E

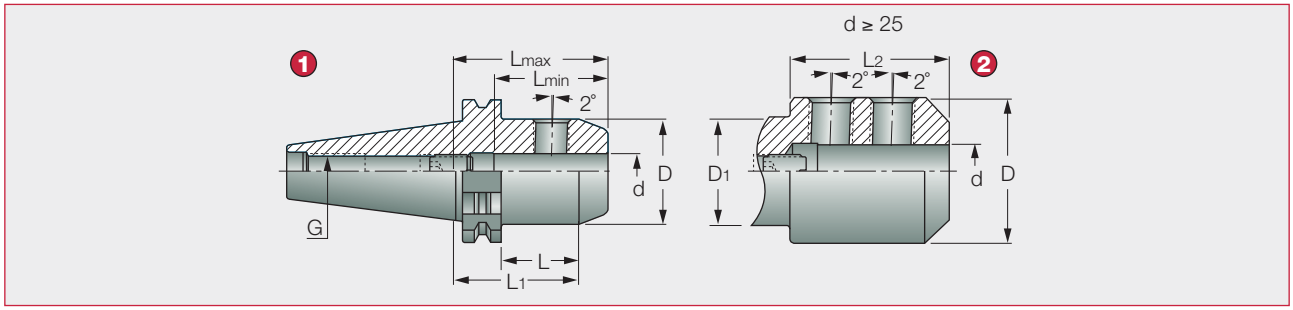

1 **DIN69871 Form A/B**
2 **DIN6359**
DIN1835 Form E (Whistle Notch type)

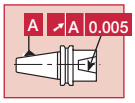

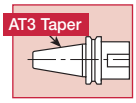

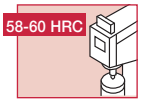

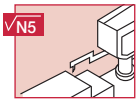

DIN69871-EM-E Endmill Chuck Holder (Whistle Notch type)

(Unit: mm)

Cat. No.	d	D	D1	L	L1	L2	Lmin	Lmax	J (1)	G	Hex Key
DIN69871 40 EM 6X 50E	6	25	-	50	30.9	-	30	40	M5	M16	2.5
DIN69871 40 EM 8X 50E	8	28	-	50	30.9	-	35	45	M6	M16	3
DIN69871 40 EM10X 50E	10	35	-	50	30.9	-	39	49	M8	M16	4
DIN69871 40 EM12X 50E	12	42	-	50	30.9	-	44	54	M10	M16	5
DIN69871 40 EM14X 63E	14	44	-	63	43.9	-	44	54	M10	M16	5
DIN69871 40 EM16X 63E	16	48	-	63	43.9	-	47	57	M12	M16	6
DIN69871 40 EM18X 63E	18	50	49.0	63	43.9	28.5	47	57	M12	M16	6
DIN69871 40 EM20X 63E	20	52	49.0	63	43.9	29.0	49	59	M16	M16	8
DIN69871 40 EM25X100E	25	65	49.0	100	80.9	65.0	54	64	M20X1.5	M16	10
DIN69871 40 EM32X100E	32	72	49.0	100	80.9	65.0	58	68	M20X1.5	M16	10
DIN69871 50 EM 6X 63E	6	25	-	63	43.9	-	35	45	M5	M24	2.5
DIN69871 50 EM 8X 63E	8	28	-	63	43.9	-	35	45	M6	M24	3
DIN69871 50 EM10X 63E	10	35	-	63	43.9	-	39	49	M8	M24	4
DIN69871 50 EM12X 63E	12	42	-	63	43.9	-	44	54	M10	M24	5
DIN69871 50 EM14X 63E	14	44	-	63	43.9	-	44	54	M10	M24	5
DIN69871 50 EM16X 63E	16	48	-	63	43.9	-	47	57	M12	M24	6
DIN69871 50 EM18X 63E	18	50	-	63	43.9	-	47	57	M12	M24	6
DIN69871 50 EM20X 63E	20	52	-	63	43.9	-	49	49	M16	M24	8
DIN69871 50 EM25X 80E	25	65	-	80	60.9	-	54	64	M20X1.5	M24	10
DIN69871 50 EM32X100E	32	72	-	100	80.9	-	58	68	M20X1.5	M24	10
DIN69871 50 EM40X100E	40	90	79.9	100	80.9	43.0	68	78	M20X1.5	M24	10
DIN69871 50 EM50X125E	50	98	79.9	125	105.9	68	78	88	M20X1.5	M24	10

(1) The adjustment screw has an internal coolanrt hole.
Add B for coolant through the flange.

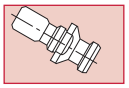

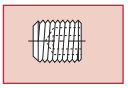

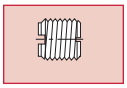

Page ☞ Pull Stud 144 | Lock Screw 150 | Preset Screw 150

Tungaloy Member IMC Group

DIN69871 • TUNGSHRINK • Thermal SHRINK Holder

A DIN69871-SHRINK (2) (3) G2.5 25,000 min-1

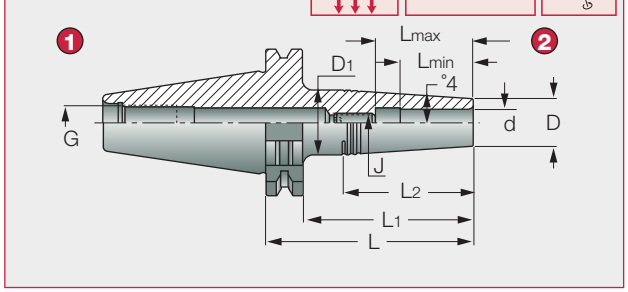

B DIN69871-SHRINK (3) G2.5 25,000 min-1

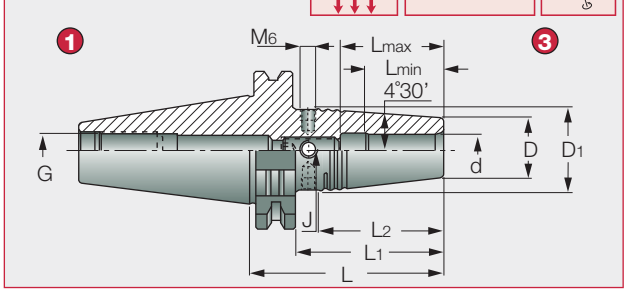

1. **DIN69871 Form A**
2. **SRK (for carbide shank)**
3. **SRKIN (for carbide and HSS shank)**

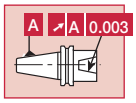

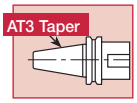

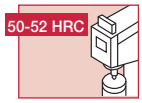

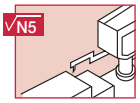

A DIN69871-SHRINK Thermal SHRINK Holder (SRK type, for carbide shank) (2), (3)

(Unit: mm)

Cat. No.	d	D1	D	L	L1	L2	Lmin	Lmax	G	J	Hex Key
DIN69871 40 SRK 3X50	3	15.0	10	69.1	50	35.55	10	16	M16	M6	3
DIN69871 40 SRK 3X85	3	19.0	10	104.1	85	64.15	10	16	M16	M6	3
DIN69871 40 SRK 4X50	4	15.0	10	69.1	50	35.55	12	18	M16	M6	3
DIN69871 40 SRK 4X85	4	19.0	10	104.1	85	64.15	12	18	M16	M6	3
DIN69871 40 SRK 5X50	5	15.0	10	69.1	50	35.55	15	21	M16	M6	3
DIN69871 40 SRK 5X85	5	19.0	10	104.1	85	64.15	12	18	M16	M6	3
DIN69871 40 SRK 6X50	6	16.0	11	69.1	50	35.50	18	24	M16	M8	4
DIN69871 40 SRK 6X85	6	20.0	11	104.1	85	64.10	18	24	M16	M8	4
DIN69871 40 SRK 8X50	8	20.0	14	69.1	50	42.50	25	31	M16	M10	5
DIN69871 40 SRK 8X85	8	23.0	14	104.1	85	63.95	25	31	M16	M10	5
DIN69871 40 SRK 10X50	10	22.0	16	69.1	50	42.40	30	36	M16	M12	6
DIN69871 40 SRK 10X85	10	24.5	16	104.1	85	60.28	30	36	M16	M12	6
DIN69871 40 SRK 12X50	12	26.0	20	69.1	50	42.30	32	42	M16	M10	5
DIN69871 40 SRK 12X85	12	28.0	20	104.1	85	56.60	32	42	M16	M10	5

B DIN69871-SHRINK Thermal SHRINK Holder (SRKIN type, for carbide and HSS shank) (3)

(Unit: mm)

Cat. No.	d	D	D1	L	L1	L2	Lmin	Lmax	G	J	Hex Key
DIN69871 40 SRKIN 6X80	6	21	27	80	60.9	38.0	25	36	M16	M5	2.5
DIN69871 40 SRKIN 8X80	8	21	27	80	60.9	38.0	25	36	M16	M6	3
DIN69871 40 SRKIN 10X80	10	24	32	80	60.9	50.5	31	42	M16	M8	4
DIN69871 40 SRKIN 12X80	12	24	32	80	60.9	50.5	31	47	M16	M10	5
DIN69871 40 SRKIN 14X80	14	27	34	80	60.9	44.2	36	47	M16	M10	5
DIN69871 40 SRKIN 16X80	16	27	34	80	60.9	44.2	39	50	M16	M12	6
DIN69871 40 SRKIN 18X80	18	33	42	80	60.9	57.0	39	50	M16	M12	6
DIN69871 40 SRKIN 20X80	20	33	42	80	60.9	57.0	41	52	M16	M16	8
DIN69871 40 SRKIN 25X100	25	44	53	100	80.9	57.0	47	58	M16	M16	8
DIN69871 50 SRKIN 6X80 (1)	6	21	27	80	60.9	38.	25	36	M24	M5	2.5
DIN69871 50 SRKIN 8X80 (1)	8	21	27	80	60.9	38.0	25	36	M24	M6	3
DIN69871 50 SRKIN 10X80 (1)	10	24	32	80	60.9	51.0	31	42	M24	M8	4
DIN69871 50 SRKIN 12X80 (1)	12	24	32	80	60.9	51.0	36	47	M24	M10	5
DIN69871 50 SRKIN 14X80 (1)	14	27	34	80	60.9	44.5	36	47	M24	M10	5
DIN69871 50 SRKIN 16X80 (1)	16	27	34	80	60.9	44.5	39	50	M24	M12	6
DIN69871 50 SRKIN 18X80 (1)	18	33	42	80	60.9	57.0	39	50	M24	M12	6
DIN69871 50 SRKIN 20X80 (1)	20	33	42	80	60.9	57.0	41	52	M24	M16	8
DIN69871 50 SRKIN 25X100 (1)	25	44	53	100	80.9	57.0	47	58	M24	M16	8
DIN69871 50 SRKIN 32X100 (1)	32	44	53	100	80.9	57.0	47	58	M24	M16	8

(1) Balanced to G2.5 20.000 min-1
Use only inductive heating device for SRKIN holders.

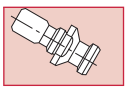

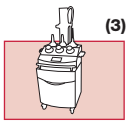

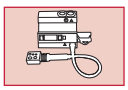

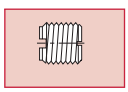

Page ☞ 144 | 131 - 132 | 136 | 138 | 150

DIN69871 • Shell Mill Holder / Face Mill Holder

A DIN69871-SEM

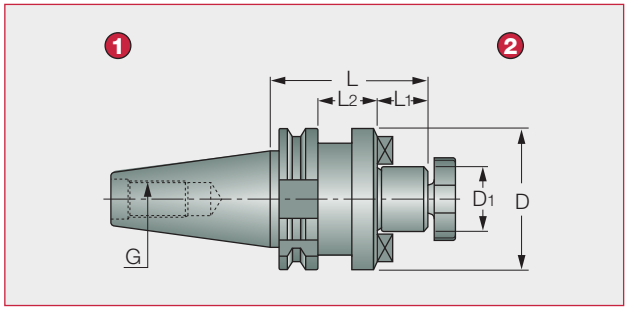

B DIN69871-FM

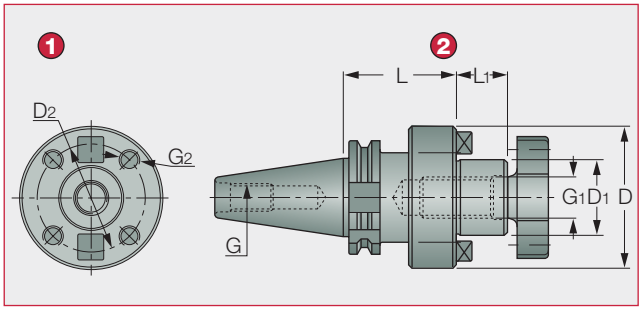

1 DIN69871 Form A
2 ISO 3937

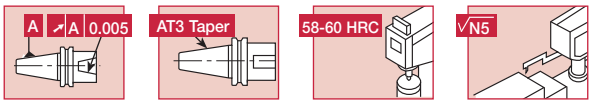

1 DIN69871 Form A
2 DIN6357

A DIN69871-SEM Shell Mill Holder

(Unit: mm)

Cat. No.	D_1	D	L	L_1	L_2	G
DIN69871 30 SEM16X35	16	38	35	17	15.9	M12
DIN69871 30 SEM22X50	22	47	50	19	30.9	M12
DIN69871 30 SEM27X50	27	58	50	21	30.9	M12
DIN69871 40 SEM16X35	16	38	35	17	15.9	M16
DIN69871 40 SEM22X35	22	47	35	19	15.9	M16
DIN69871 40 SEM27X60	27	58	60	21	40.9	M16
DIN69871 40 SEM32X60	32	66	60	24	40.9	M16
DIN69871 40 SEM40X60	40	82	60	27	40.9	M16
DIN69871 50 SEM16X35	16	38	35	17	15.9	M24
DIN69871 50 SEM22X35	22	47	35	19	15.9	M24
DIN69871 50 SEM22X50X200	22	50	200	19	180.9	M24
DIN69871 50 SEM22X64X300	22	64	300	19	280.9	M24
DIN69871 50 SEM27X35	27	58	35	21	15.9	M24
DIN69871 50 SEM32X35	32	66	35	24	15.9	M24
DIN69871 50 SEM32X78X370	32	78	370	24	350.9	M24
DIN69871 50 SEM40X50	40	82	50	27	30.9	M24
DIN69871 50 SEM50X60	50	95	60	30	40.9	M24

B DIN69871-FM Face Mill Holder

(Unit: mm)

Cat. No.	D_1	D	D_2	L	L_1	G_2	G_1	G
DIN69871 40 FM 40	40	88	66.7	60	27	M12	M20	M16
DIN69871 50 FM 40	40	88	66.7	70	27	M12	M20	M24
DIN69871 50 FM 60	60	128	101.6	70	40	M16	-	M24

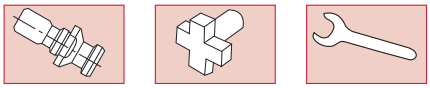

Page ☞ Pull Stud 144 | Lock Screw 150 | Wrench 151

Tungaloy Member IMC Group

DIN69871 • Shell Mill Holder

DIN69871-SEM-C

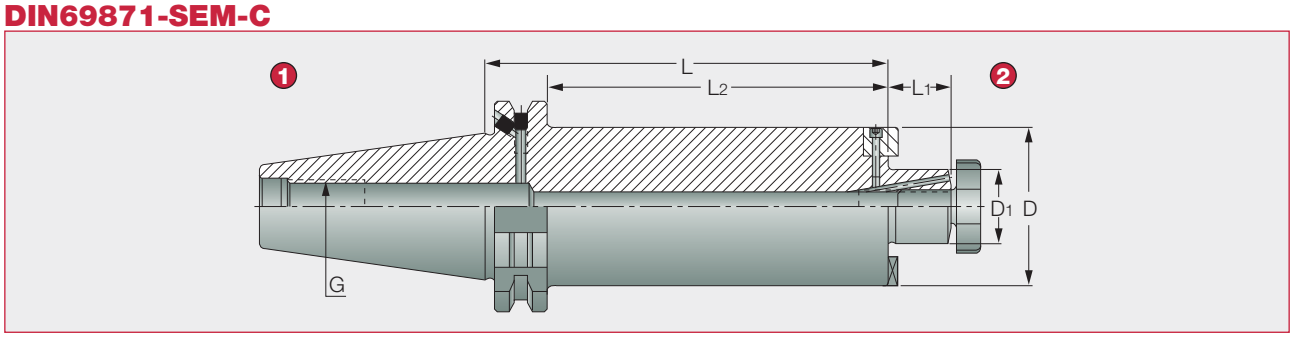

1 **DIN69871 A/B**
2 **ISO 3937**

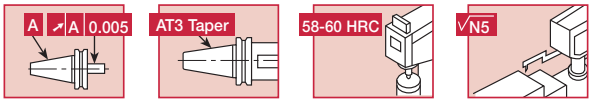

DIN69871-SEM-C Extra Long Shell Mill Holder with Coolant Hole

(Unit: mm)

Cat. No.	D_1	D	L	L_1	L_2	G
DIN69871 50 SEM22X48X200C	22	48	200	19	181	M24
DIN69871 50 SEM22X61X300C	22	61	300	19	281	M24
DIN69871 50 SEM27X61X300C	27	61	300	21	281	M24
DIN69871 50 SEM32X78X370C	32	78	370	24	351	M24

If the "B type" option is required, the plug screw must the removed from the flange cooling hole. (use a 2 mm hex key.)

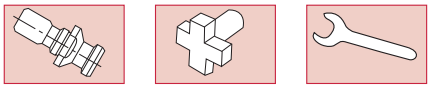

Pull Stud — Page 144
Lock Screw — Page 150
Wrench — Page 151

DIN69871 • Shell Mill Holder

DIN69871-SEMC

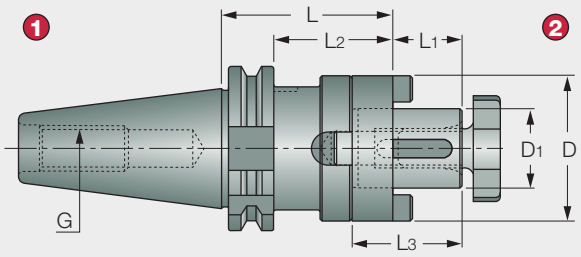

1 **DIN69871 Form A**
2 **DIN6358**

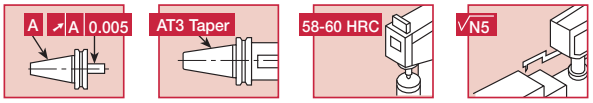

DIN69871-SEMC COMBI – Shell Mill Holder (Combination type)

(Unit: mm)

Cat. No.	D_1	L	L_1	L_2	L_3	D	G
DIN69871 30 SEMC 16X 50	16	50	17	30.9	27	32	M12
DIN69871 30 SEMC 22X 50	22	50	19	30.9	31	40	M12
DIN69871 30 SEMC 27X 55	27	55	21	35.9	33	48	M12
DIN69871 30 SEMC 32X 60	32	60	24	40.9	38	58	M12
DIN69871 40 SEMC 16X 55	16	55	17	35.9	27	32	M16
DIN69871 40 SEMC 16X100	16	100	17	80.9	27	32	M16
DIN69871 40 SEMC 22X 55	22	55	19	35.9	31	40	M16
DIN69871 40 SEMC 22X100	22	100	19	80.9	31	40	M16
DIN69871 40 SEMC 27X 55	27	55	21	35.9	33	48	M16
DIN69871 40 SEMC 27X100	27	100	21	80.9	33	48	M16
DIN69871 40 SEMC 32X 60	32	60	24	45.9	38	58	M16
DIN69871 40 SEMC 32X100	32	100	24	80.9	38	58	M16
DIN69871 40 SEMC 40X 60	40	60	27	40.9	41	70	M16
DIN69871 50 SEMC 16X 55	16	55	17	35.9	27	32	M24
DIN69871 50 SEMC 16X100	16	100	17	80.9	27	32	M24
DIN69871 50 SEMC 22X 55	22	55	19	35.9	31	40	M24
DIN69871 50 SEMC 22X100	22	100	19	80.9	31	40	M24
DIN69871 50 SEMC 27X 55	27	55	21	35.9	33	48	M24
DIN69871 50 SEMC 27X100	27	100	21	80.9	33	48	M24
DIN69871 50 SEMC 32X 55	32	55	24	35.9	38	58	M24
DIN69871 50 SEMC 32X100	32	100	24	80.9	38	58	M24
DIN69871 50 SEMC 40X 55	40	55	27	35.9	41	70	M24
DIN69871 50 SEMC 40X100	40	100	27	80.9	41	70	M24
DIN69871 50 SEMC 50X70	50	70	30	50.9	46	90	M24

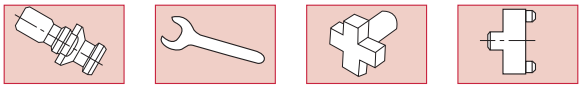

	Pull Stud	Wrench	Lock Screw	Driving Ring
Page	144	151	150	151

Tungaloy
Member IMC Group

DIN69871 • Drill Chuck Holder / Conversion Adapter

DIN69871-DC B

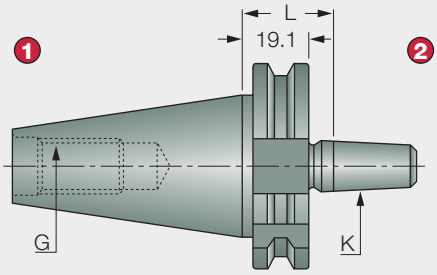

1 **DIN69871 Form A**
2 **DIN238**

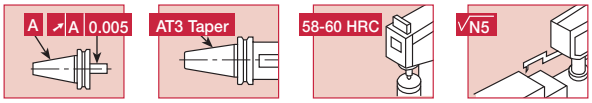

DIN69871-DC B Drill Chuck Holder

(Unit: mm)

Cat. No.	K	L	G
DIN69871 30 DC B12X 26	B12	26	M12
DIN69871 30 DC B16X 26	B16	26	M12
DIN69871 40 DC B12X 26	B12	26	M16
DIN69871 40 DC B16X 26	B16	26	M16
DIN69871 40 DC B18X 26	B18	26	M16
DIN69871 50 DC B12X 26	B12	26	M24
DIN69871 50 DC B16X 26	B16	26	M24
DIN69871 50 DC B18X 26	B18	26	M24

DIN69871-AD

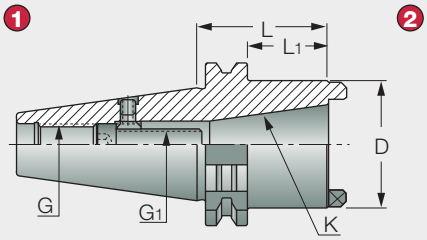

1 **DIN69871 Form A**
2 **DIN2080**
DIN69871/A
BT MAS 403

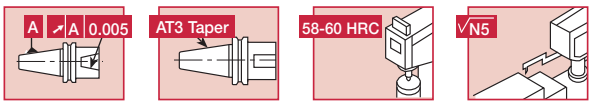

DIN69871-AD Conversion Adapter

(Unit: mm)

Cat. No.	K	L	L_1	D	G_1	G
DIN69871 40 AD BT/SK 30	DIN69871/A, BT MAS-403	50	30.9	50	M12	M16
DIN69871 40 AD DIN2080 30	DIN2080	50	30.9	50	M12	M16
DIN69871 50 AD BT/SK 40	DIN69871/A, BT MAS-403	70	50.9	66	M16	M24
DIN69871 50 AD DIN2080 40	DIN2080	70	50.9	63	M16	M24

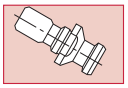

Pull Stud

Page ☞ 144

DIN69871 • Morse Taper Holder

DIN69871-MT

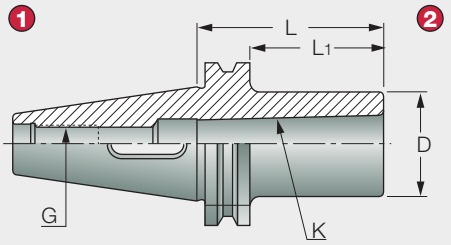

1 **DIN69871 Form A**
2 **DIN6383**

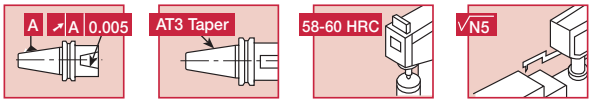

DIN69871-MT Morse Taper Holder

(Unit: mm)

Cat. No.	K	L	L_1	D	G
DIN69871 30 MT1X 50	MT1	50	30.9	25	M12
DIN69871 30 MT2X 60	MT2	60	40.9	32	M12
DIN69871 30 MT3X 75	MT3	75	55.9	40	M12
DIN69871 40 MT1X 50	MT1	50	30.9	25	M16
DIN69871 40 MT2X 50	MT2	50	30.9	32	M16
DIN69871 40 MT3X 70	MT3	70	50.9	40	M16
DIN69871 40 MT4X 95	MT4	95	75.9	48	M16
DIN69871 50 MT1X 45	MT1	45	25.9	25	M24
DIN69871 50 MT2X 60	MT2	60	40.9	32	M24
DIN69871 50 MT3X 65	MT3	65	45.9	40	M24
DIN69871 50 MT4X 95	MT4	95	75.9	48	M24
DIN69871 50 MT5X105	MT5	105	85.9	63	M24

DIN69871-MT-DRW

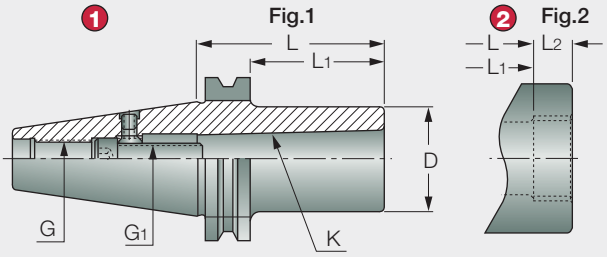

1 **DIN69871 Form A**
2 **DIN6364**

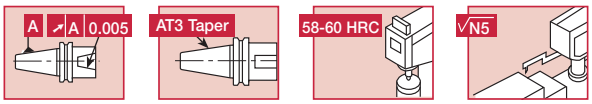

DIN69871-MT-DRW Morse Taper Draw Bar type Holder

(Unit: mm)

Cat. No.	K	L	L_1	L_2	D	G_1	G	Fig
DIN69871 40 MT1 DRW	MT1	50	30.9	-	25	M6	M16	1
DIN69871 40 MT2 DRW	MT2	50	30.9	-	32	M10	M16	1
DIN69871 40 MT3 DRW	MT3	70	50.9	-	40	M12	M16	1
DIN69871 40 MT4 DRW (1)	MT4	95	75.9	15	63	M16	M16	2
DIN69871 50 MT1 DRW	MT1	45	25.9	-	25	M6	M24	1
DIN69871 50 MT2 DRW	MT2	60	40.9	-	32	M10	M24	1
DIN69871 50 MT3 DRW	MT3	65	45.9	-	40	M12	M24	1
DIN69871 50 MT4 DRW (1)	MT4	70	50.9	15	63	M16	M24	2
DIN69871 50 MT5 DRW (1)	MT5	100	80.9	18	78	M20	M24	2

(1) DIN 2201.

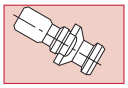

Pull Stud

Page ☞ 144

Tungaloy
Member IMC Group

BORE DIN69871

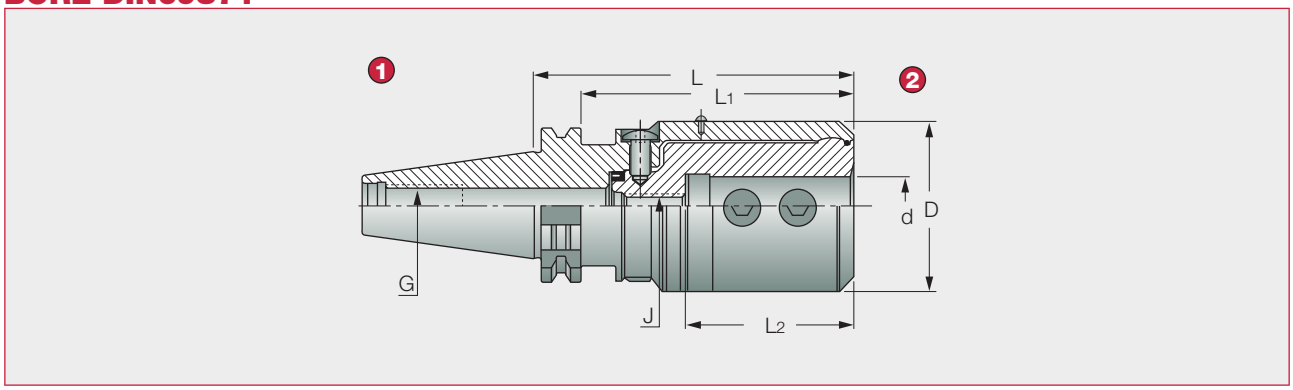

1 **BORE DIN69871 Form A/B**
2 **ISO 9766**

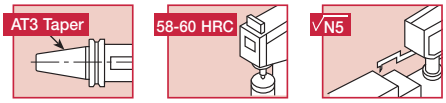

BORE DIN69871 Adjustable Drilling Diameter Holder

(Unit: mm)

Cat. No.	d	D	L	L_1	L_2	J	G
FITBORE DIN69871 40 EM16	16	72	135.6	116.5	71	M10	M16
FITBORE DIN69871 40 EM20	20	72	135.6	116.5	71	M10	M16
FITBORE DIN69871 40 EM25	25	72	135.6	116.5	71	M10	M16
FITBORE DIN69871 40 EM32	32	72	135.6	116.5	71	M10	M16
FITBORE DIN69871 40 EM40	40	72	135.6	116.5	71	M10	M16
FITBORE DIN69871 50 EM16	16	72	115.6	96.5	71	M10	M24
FITBORE DIN69871 50 EM20	20	72	115.6	96.5	71	M10	M24
FITBORE DIN69871 50 EM25	25	72	115.6	96.5	71	M10	M24
FITBORE DIN69871 50 EM32	32	72	115.6	96.5	71	M10	M24
FITBORE DIN69871 50 EM40	40	72	115.6	96.5	71	M10	M24

Add B for coolant through the flange.

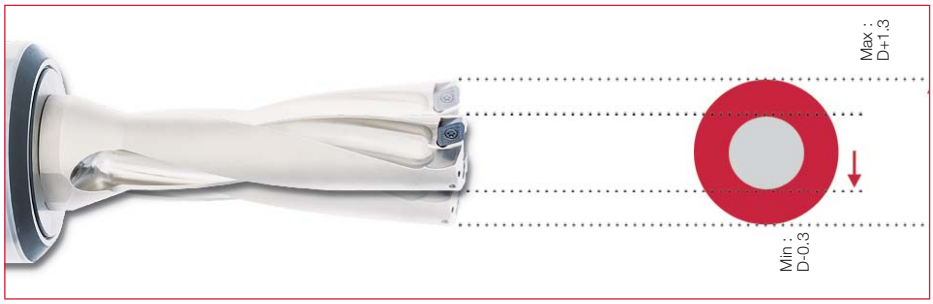

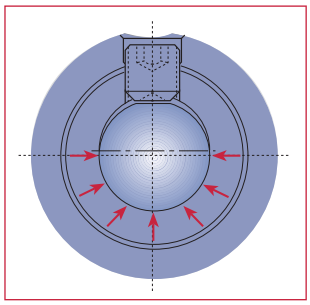

The bore's section is actually made from two shifted circular sections. The clamping screw pushes the drill shank through a narrowed opening, forcing elastic deformation of the holder. Contact is made around more than 180°, providing a high clamping force.

	Lock Screw	Pull Stud	Preset Screw	User Guide
Page	150	144	150	7

DIN69871 • Center Alignment and Cylindical

ADJ DIN69871 ER32

G2.5
20,000 min-1

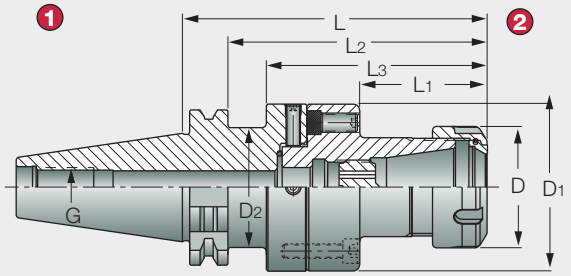

0.1 mm 1°

1 DIN69871 Form A
2 DIN6499

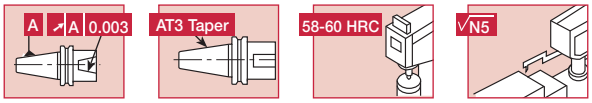

ADJ DIN69871 ER32 ER Collet Chuck with Center Alignment

(Unit: mm)

Cat. No.	Range	L	L1	L2	L3	D	D1	D2	G
ADJ DIN68971 40 D70 ER32	2-20	124.5	52.5	105.4	89.5	50	70	46	M16
ADJ DIN69871 50 D70 ER32	2-20	124.5	52.5	105.4	-	50	70	-	M24

1°
0.1 mm

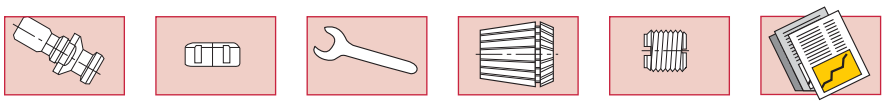

Pull Stud	Nut	Wrench	ER Collet	Preset Screw	User Guide
144	147	148	116 - 119	149	113 - 115

Page

Tungaloy
Member IMC Group

DIN69871 • TUNGGTI • Tapping Holder

GTI DIN69871-ER

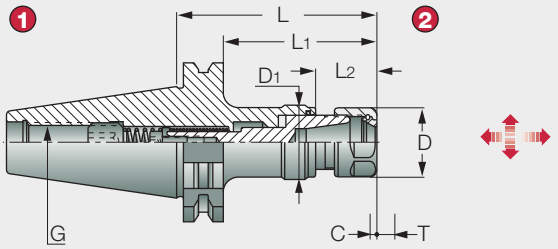

1 **DIN69871 Form A**
2 **DIN6499**

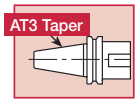

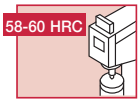

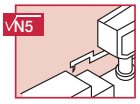

GTI DIN69871-ER Tapping Holder

(Unit: mm)

Cat. No.	Tap Capacity	Range	L	L1	L2	D	D1	T	C	G
GTI DIN69871 40 ER16	M3-M10	0.5-10	81.2	62.1	24.6	28	29.5	8	3	M16
GTI DIN69871 40 ER32	M6-M20	2-20	112.6	93.5	33.0	50	56.5	9	4	M16
GTI DIN69871 40 ER40	M6-M28	3-26	130.6	111.5	51.0	63	56.5	9	4	M16
GTI DIN69871 50 ER16	M3-M10	0.5-10	106.8	87.7	24.6	28	29.5	8	3	M24
GTI DIN69871 50 ER32	M6-M20	2-20	115.3	96.2	33.0	50	56.5	9	4	M24
GTI DIN69871 50 ER40	M6-M28	3-26	133.3	114.2	51.0	63	56.5	9	4	M24

DIN69871 • TUNGFIT • Modular system

DIN69871 CF4

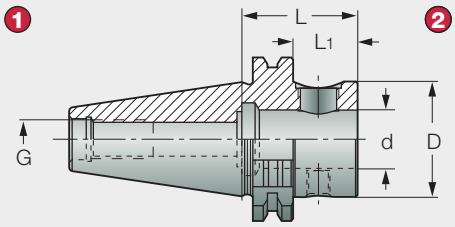

1 **DIN69871 Form A/B**
2 **TungFit**

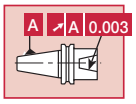

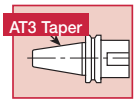

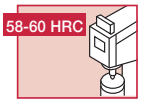

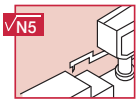

DIN69871 CF Modular System

(Unit: mm)

Cat. No.	Tap Capacity	L	L1	D	d	G
DIN69871 40 CF4-S	40	44.1	25.0	44.5	CF4	M16
DIN69871 40 CF4-L	40	100	80.9	44.5	CF4	M16
DIN69871 50 CF4-S	50	44.1	25.0	44.5	CF4	M24
DIN69871 50 CF4-L	50	100	80.9	44.5	CF4	M24

Tightening torque: 58.8 N·m
Add B for coolant through the flange.

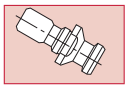
Pull Stud

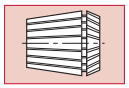
ER Collet

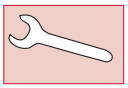
Wrench

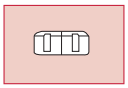
Nut

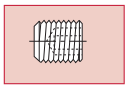
Lock Screw

User Guide

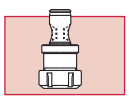
Tooling

Page	Pull Stud	ER Collet	Wrench	Nut	Lock Screw	User Guide	Tooling
	144	116 - 119	148	147	150	113 -115, 7	112

DIN69871 • TUNGCLICK • Quick change holder

DIN69871-ER-CLICK

G2.5
20,000 min-1

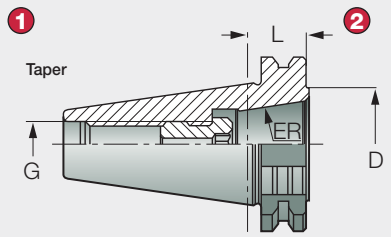

1 **DIN69871 Form A**
2 **DIN6499 ER-CLICK**

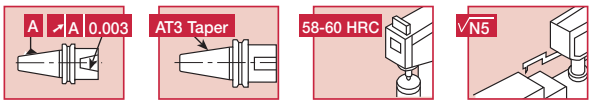

DIN69871-ER-CLICK Quick Change System

(Unit: mm)

Cat. No.	L	D	G
DIN69871 40 ER32 CLICK-IN	20.1	41	M16
DIN69871 50 ER32 CLICK-IN	20.1	41	M24

Tightening torque: 235 N·m

DIN69871 • TUNGFLEX • Indexable Modular System

DIN69871-ODP

G2.5
20,000 min-1

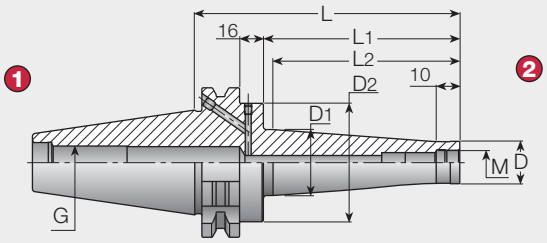

1 **DIN69871 Form A/B**
2 **TungFlex**

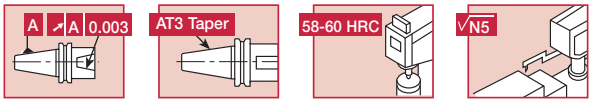

DIN69871-ODP Indexable Modular System

(Unit: mm)

Cat. No.	M	D	D_1	L	L_1	L_2	G
DIN69871 40 ODP 6X58	M6	9.80	13.0	58	38.9	32	M16
DIN69871 40 ODP 6X98	M6	9.80	23.0	98	78.9	74	M16
DIN69871 40 ODP 8X58	M8	13.1	15.0	58	38.9	32	M16
DIN69871 40 ODP 8X98	M8	13.1	23.0	98	78.9	74	M16
DIN69871 40 ODP10X58	M10	18.0	20.0	58	38.9	32	M16
DIN69871 40 ODP10X98	M10	18.0	28.0	98	78.9	74	M16
DIN69871 40 ODP12X58	M12	21.0	24.0	58	38.9	34	M16
DIN69871 40 ODP12X98	M12	21.0	31.0	98	78.9	75	M16
DIN69871 40 ODP16X58	M16	29.0	28.6	58	38.9	33	M16
DIN69871 40 ODP16X98	M16	29.0	34.0	98	78.9	75	M16
DIN69871 50 ODP12X78 (1)	M12	23.0	30.0	78	58.9	50	M24
DIN69871 50 ODP12X128 (1)	M12	23.0	40.0	128	108.9	100	M24
DIN69871 50 ODP12X178 (1)	M12	23.0	40.0	178	158.9	150	M24
DIN69871 50 ODP12X228 (1)	M12	23.0	46.0	228	208.9	200	M24
DIN69871 50 ODP16X78 (1)	M16	29.0	34.0	78	58.9	50	M24
DIN69871 50 ODP16X128 (1)	M16	29.0	40.0	128	108.9	100	M24
DIN69871 50 ODP16X178 (1)	M16	29.0	55.0	178	158.9	150	M24
DIN69871 50 ODP16X228 (1)	M16	29.0	55.0	228	208.9	200	M24

(1) Balance to G6.3 12000 min-1

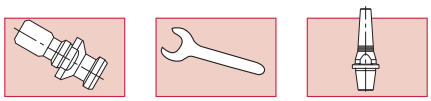

Pull Stud	Wrench	TungClick
144	148	140

Page ☞

Tungaloy
Member IMC Group

HSK • Shank Standard

DIN69893 Form A

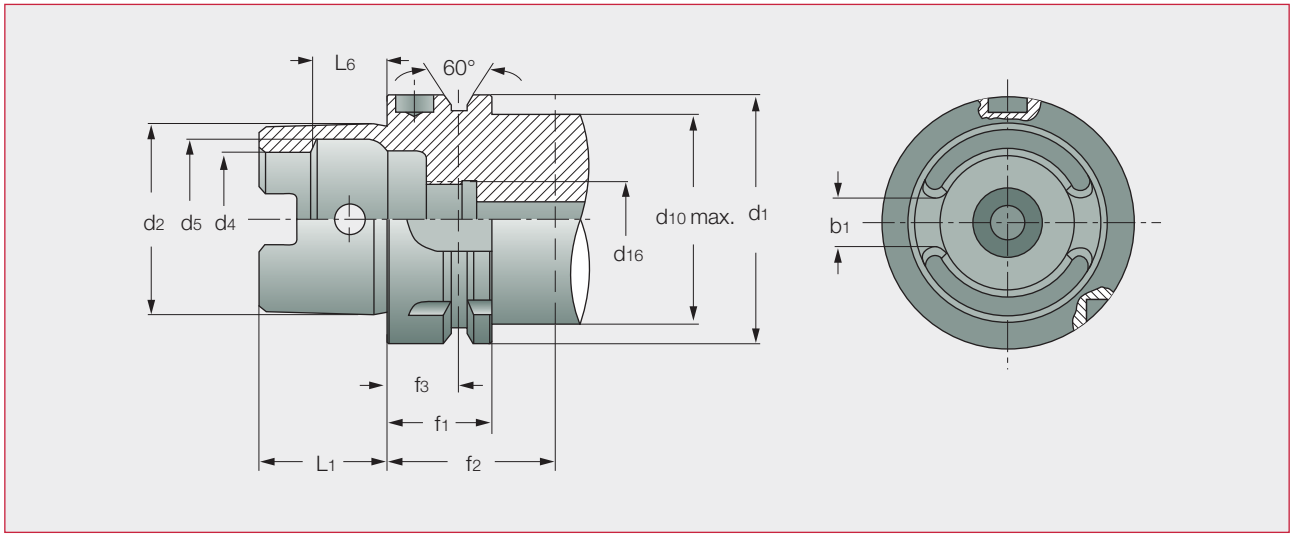

(Unit: mm)

HSK-A	d_1	d_2	d_4	d_5	d_{10}	d_{16}	L_1	L_6	b_1	f_1	f_2	f_3
40	40	30	21	25.5	34	M12x1	20	11.42	8.05	20	35	16
50	50	38	26	32.0	42	M16x1	25	14.13	10.54	26	42	18
63	63	48	34	40.0	53	M18x1	32	18.13	12.54	26	42	18
80	80	60	42	50.0	67	M20x1.5	40	22.85	16.04	26	42	18
100	100	75	53	63.0	85	M24x1.5	50	28.56	20.02	29	45	20

A DIN69893 Form E

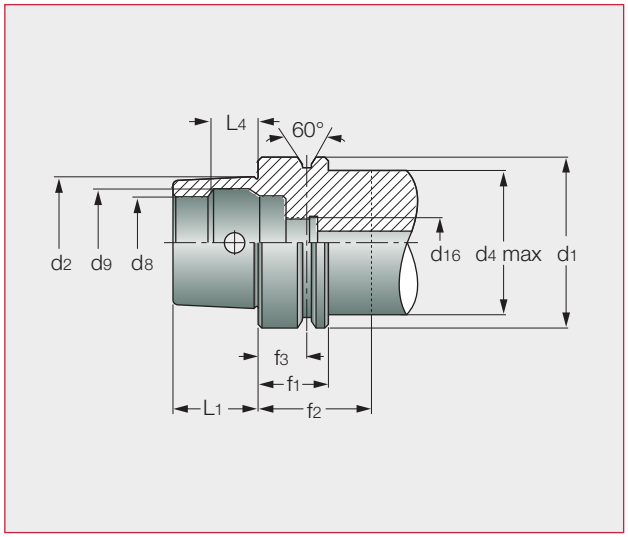

B DIN69893 Form F [1]

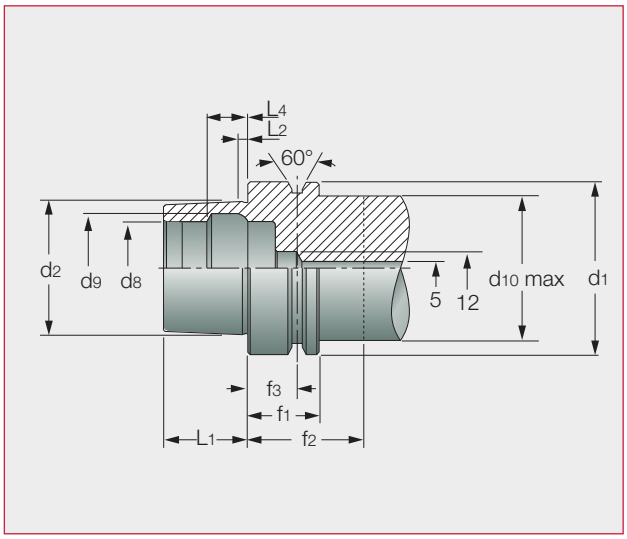

A DIN69893 Form E

(Unit: mm)

HSK-E	d_1	d_2	d_4	d_8	d_9	d_{16}	L_1	L_4	f_1	f_2	f_3
32	32	24	26	17	19	M10X1	16	8.92	20	35	16
40	40	30	34	21	25.5	M12X1	20	11.42	20	35	16
50	50	38	42	26	32.0	M16X1	25	14.13	26	42	18
63	63	48	53	34	40.0	M18X1	32	18.13	26	42	18

B DIN69893 Form F

(Unit: mm)

HSK-F	d_1	d_2	d_4	d_8	d_9	L_1	L_2	L_4	f_1	f_2	f_3
63	63	38	53	26	32	25	5.0	14.13	26	42	18

[1] Without crosshole.

HSK • Collet Chuck Holder

A HSK E-ER

G2.5
40,000 min-1

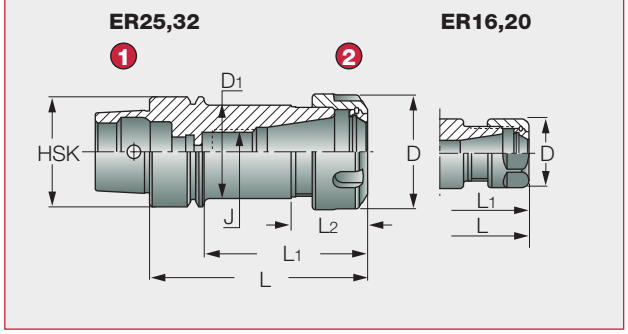

1 HSK DIN69896 Form E
2 DIN6499

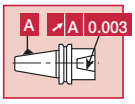

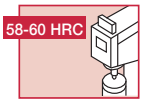

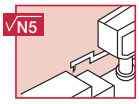

B HSK A-ER-M MINI

G2.5
20,000 min-1

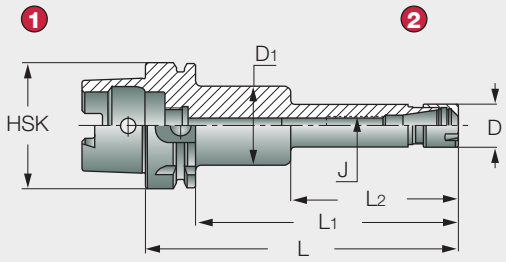

1 HSK DIN69893 Form A
2 DIN6499

A HSK-E-ER ER Collet Chuck Holder

(Unit: mm)

Cat. No.	HSK-E	Range	D	D1	L	L1	L2	J
HSK E 32 ER16 X 60	32	0.5-10	28	22.4	60	40	21.5	-
HSK E 32 ER20 X 60	32	1-13	34	25.4	60	40	26	-
HSK E 32 ER25 X 65	32	1-16	42	25.8	65	45	30	-
HSK E 40 ER16 X 60	40	0.5-10	28	-	60	40	-	-
HSK E 40 ER16 X 80	40	0.5-10	28	-	80	60	-	M10
HSK E 40 ER20 X 80	40	1-13	34	-	80	60	-	M12
HSK E 40 ER25 X 80	40	1-16	42	34.0	80	60	28	M18X1.5
HSK E 40 ER32 X 80	40	2-20	50	40.1	80	60	31	M22X1.5
HSK E 50 ER16 X 80 (1)	50	0.5-10	28	-	80	54	-	M10
HSK E 50 ER16 X 100 (1)	50	0.5-10	28	-	100	74	-	M10
HSK E 50 ER16 X 100M (1) (3)	50	0.5-10	22	-	100	74	-	M10
HSK E 50 ER20 X 80 (1)	50	1-13	34	-	80	54	-	M10
HSK E 50 ER25 X 80 (1)	50	1-16	42	32.4	80	54	28	-
HSK E 50 ER32 X 80 (1)	50	2-20	50	40.4	80	54	31	-
HSK E 50 ER32 X 100 (1)	50	2-20	50	40.4	100	74	31	M22X1.5
HSK E 63 ER16 X 80 (2)	63	0.5-10	28	-	80	54	-	M10
HSK E 63 ER16 X 100 (2)	63	0.5-10	28	-	100	74	-	M10
HSK E 63 ER20 X 75	63	1-13	34	-	75	49	-	-
HSK E 63 ER32 X 80 (2)	63	2-20	50	40.4	80	54	31	-
HSK E 63 ER32 X 100 (2)	63	2-20	50	-	100	75	-	M22X1.5
HSK E 63 ER40 X 80	63	3-26	63	-	80	54	34	-

(1) Balance to G2.5 35,000 min-1
(2) Balance to G2.5 30,000 min-1
(3) Equipped with nut ER 16 MINI.

B HSK A-ER-M MINI ER Mini Collet Chuck Holder

(Unit: mm)

Cat. No.	HSK-A	Range	D	D1	L	L1	L2	J
HSK A 50 ER16X100 M	50	0.5-10	22	-	100	74	-	M10
HSK A 50 ER16X120 M	50	0.5-10	22	-	120	94	-	M10
HSK A 50 ER20X100 M	50	1-13	28	-	100	74	-	M12
HSK A 50 ER20X120 M	50	1-13	28	-	120	94	-	M12
HSK A 63 ER16X100 M	63	0.5-10	22	-	100	74	-	M10
HSK A 63 ER16X120 M	63	0.5-10	22	40	120	94	78	M10
HSK A 63 ER16X160 M	63	0.5-10	22	40	160	134	85	M10
HSK A 63 ER20X100 M	63	1-13	28	-	100	74	-	M12
HSK A 63 ER20X120 M	63	1-13	28	-	120	94	-	M12
HSK A 63 ER20X160 M	63	1-13	28	45	160	134	85	M12
HSK A 100 ER16X100 M (1)	100	0.5-10	22	-	100	71	-	M10
HSK A 100 ER16X160 M (1)	100	0.5-10	22	40	160	131	85	M10
HSK A 100 ER20X100 M (1)	100	1-13	28	-	100	71	-	M12
HSK A 100 ER20X160 M (1)	100	1-13	28	45	160	131	85	M12

(1) Balance to G6.3 12,000 min-1

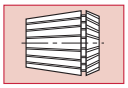
ER Collet

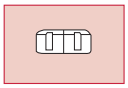
Nut

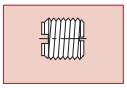
Preset Screw

Wrench

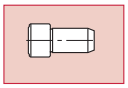
Cooling Tube

User Guide

Page	ER Collet	Nut	Preset Screw	Wrench	Cooling Tube	User Guide
	116 -119	147	149	148, 151	151	113 - 115

HSK • Collet Chuck Holder

A HSK-A-ER

G2.5
20,000 min-1

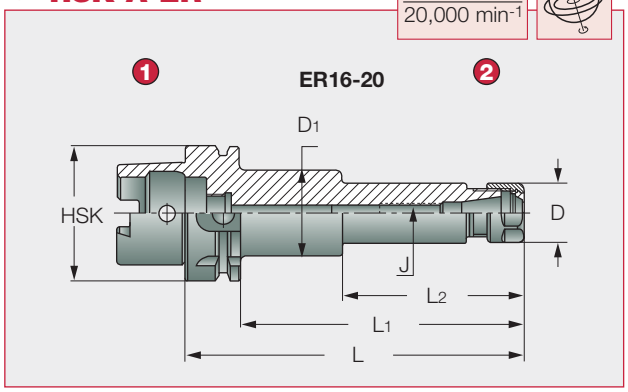

B HSK-A-ER

G2.5
20,000 min-1

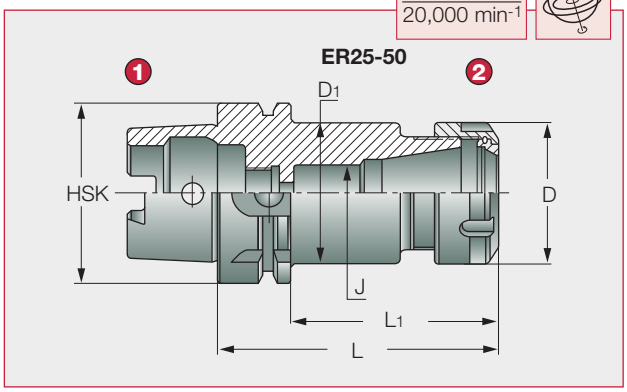

1 HSK DIN69893 Form A
2 DIN6499

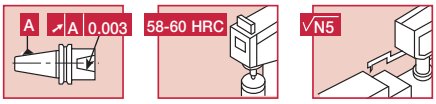

A HSK A-ER ER Collet Chuck Holder

(Unit: mm)

Cat. No.	HSK-A	Range	D	D1	L	L1	L2	J
HSK A 40 ER16X60	40	0.5-10	28	-	60	40	-	M10
HSK A 40 ER16X80	40	0.5-10	28	-	80	60	-	M10
HSK A 40 ER16X100	40	0.5-10	28	-	100	80	-	M10
HSK A 50 ER16X100	50	0.5-10	28	-	100	74	-	M10
HSK A 50 ER16X120	50	0.5-10	28	-	120	94	-	M10
HSK A 50 ER20X100	50	1-13	34	-	100	74	-	M12
HSK A 50 ER20X120	50	1-13	34	-	120	94	-	M12
HSK A 63 ER16X100	63	0.5-10	28	-	100	74	-	M10
HSK A 63 ER16X120	63	0.5-10	28	-	120	94	-	M10
HSK A 63 ER16X160	63	0.5-10	28	40	160	134	85.6	M10
HSK A 63 ER20X100	63	1-13	34	-	100	74	-	M12
HSK A 63 ER20X120	63	1-13	34	-	120	94	-	M12
HSK A 63 ER20X160	63	1-13	34	45	160	134	85.0	M12
HSK A 100 ER16X100 (1)	100	0.5-10	28	-	100	71	-	M10
HSK A 100 ER16X160 (1)	100	0.5-10	28	40	160	131	85.0	M10
HSK A 100 ER20X100 (1)	100	1-13	34	-	100	71	-	M12
HSK A 100 ER20X160 (1)	100	1-13	34	45	160	131	85.0	M12

(1) Balance to G6.3 12,000 min-1

B HSK A-ER ER Collet Chuck Holder

(Unit: mm)

Cat. No.	HSK-A	Range	D	D1	L	L1	L2	J
HSK A 40 ER25X80	40	1-16	42	32.4	80	60	28	M18x1.5
HSK A 40 ER25X100	40	1-16	42	32.4	100	80	28	M16
HSK A 40 ER32X100	40	2-20	50	40.4	100	80	31	M22x1.5
HSK A 50 ER25X 80	50	1-16	42	32.4	80	54	28	M16
HSK A 50 ER25X100	50	1-16	42	41.8	100	74	28.5	M16
HSK A 50 ER32X100	50	2-20	50	40.4	100	74	31	M22x1.5
HSK A 50 ER32X120	50	2-20	50	41.8	120	94	35	M22x1.5
HSK A 63 ER25X 80	63	1-16	42	-	80	54	-	M16
HSK A 63 ER25X100	63	1-16	42	-	100	74	-	M16
HSK A 63 ER25X120	63	1-16	42	-	120	94	-	M16
HSK A 63 ER25X160	63	1-16	42	-	160	134	-	M16
HSK A 63 ER32X 80	63	2-20	50	40.4	80	54	31	M22x1.5
HSK A 63 ER32X100	63	2-20	50	-	100	74	-	M22x1.5
HSK A 63 ER32X120	63	2-20	50	-	120	94	-	M22x1.5
HSK A 63 ER32X140	63	2-20	50	-	140	114	-	M22x1.5
HSK A 63 ER32X160	63	2-20	50	-	160	134	-	M22x1.5
HSK A 63 ER40X 80	63	3-26	63	50.4	80	54	34	-
HSK A 63 ER40X100	63	3-26	63	50.4	100	74	34	M28x1.5
HSK A 63 ER40X120	63	3-26	63	50.4	120	94	34	M28x1.5

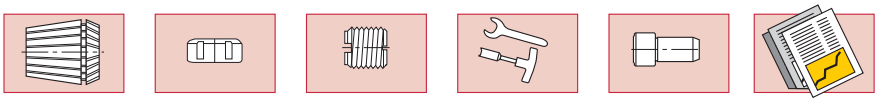

	ER Collet	Nut	Preset Screw	Wrench	Cooling Tube	User Guide
Page	116 - 119	147	149	148, 151	151	113 - 115

HSK • Collet Chuck Holder

HSK-A-ER

G6.3
12,000 min-1

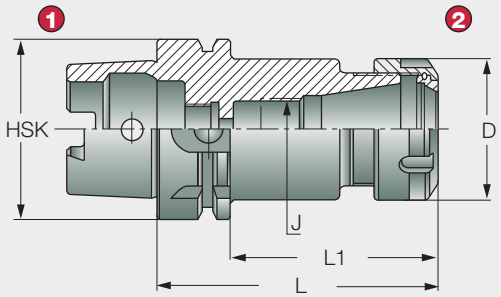

1 **HSK DIN69893 Form A**
2 **DIN6499**

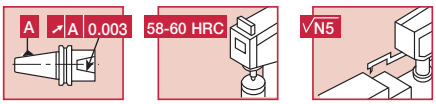

HSK A-ER ER Collet Chuck Holder

(Unit: mm)

Cat. No.	HSK-A	Range	D	L	L1	J
HSK A 100 ER25X100	100	1-16	42	100	71	M16
HSK A 100 ER25X120	100	1-16	42	120	91	M16
HSK A 100 ER25X160	100	1-16	42	160	134	M16
HSK A 100 ER32X100	100	2-20	50	100	71	M22x1.5
HSK A 100 ER32X120	100	2-20	50	120	91	M22x1.5
HSK A 100 ER32X160	100	2-20	50	160	131	M22x1.5
HSK A 100 ER40X100	100	3-26	63	100	71	M28x1.5
HSK A 100 ER40X120	100	3-26	63	120	91	M28x1.5
HSK A 100 ER40X160	100	3-26	63	160	131	M28x1.5
HSK A 100 ER50X100	100	10-34	78	100	71	-

	ER Collet	Nut	Preset Screw	Wrench	Cooling Tube	User Guide
Page	116 - 119	147	149	148, 151	151	113 - 115

HSK • Collet Chuck Holder

HSK FM-ER16

G2.5
30,000 min-1

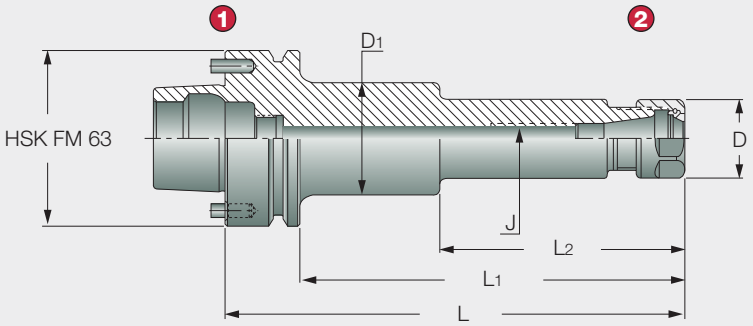

Used for MAKINO'S machine models MAG3, MAG4 and V77. These tools are based on the HSK63F type with two drive pins which improve torque transmission.

1 HSK DIN69893 FM (1)
2 DIN6499

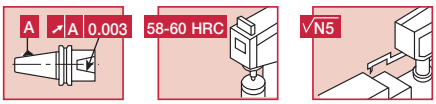

HSK FM-ER16 ER Collet Chuck Holder

(Unit: mm)

Cat. No.	HSK FM	Range	L	L1	L2	D	D1	J
HSK FM 63 ER16x80	63	0.5-10	80	54	-	28	-	M10
HSK FM 63 ER16x100	63	0.5-10	100	74	-	28	-	M10
HSK FM 63 ER16x120	63	0.5-10	120	94	-	28	-	M10
HSK FM 63 ER16x160	63	0.5-10	160	134	85.6	28	40	M10

(1) The driving pins can be removed, turning the toolholder into a standard HSK "F63" type.

HSK-FM-ER

G2.5
30,000 min-1

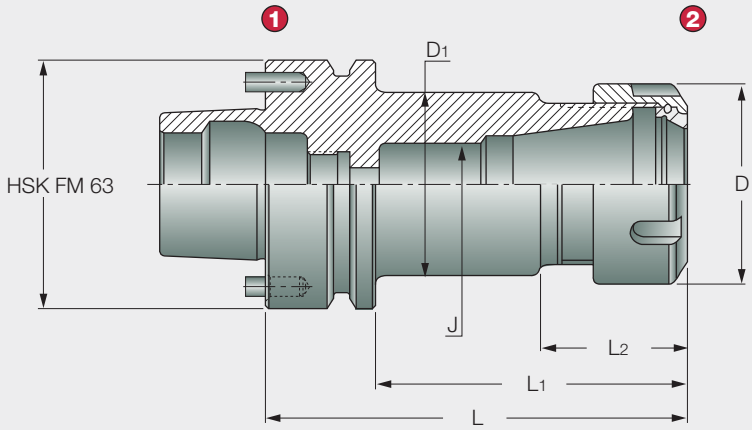

Used for MAKINO'S machine models MAG3, MAG4 and V77. These tools are based on the HSK63F type with two drive pins which improve torque transmission.

1 HSK DIN69896 FM (1)
2 DIN6499

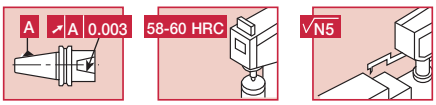

HSK FM-ER ER Collet Chuck Holder

(Unit: mm)

Cat. No.	HSK FM	Range	L	L1	L2	D	D1	J
HSK FM 63ER32x80	63	2-20	80	54	-	50	-	-
HSK FM 63ER32x100	63	2-20	100	74	-	50	-	M22x1.5
HSK FM 63ER40x80	63	3-26	80	54	32	63	50	-
HSK FM 63ER40x100	63	3-26	100	74	32	63	50	M28x1.5

(1) The driving pins can be removed, turning the toolholder into a standard HSK "F63" type.

	ER Collet	Nut	Preset Screw	Wrench	Cooling Tube	User Guide
Page	116 - 119	147	149	148, 151	151	113 - 115

HSK E–ER–BALANCE

(1) G2.5 / 20,000 min-1

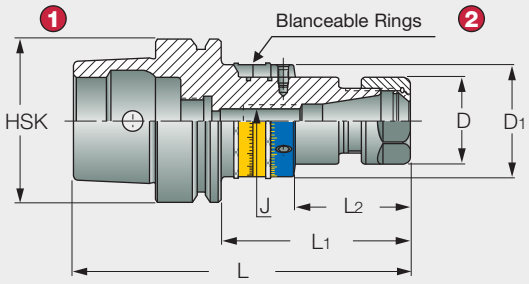

1 HSK DIN69893 Form E
2 DIN6499 ER-BALANCE

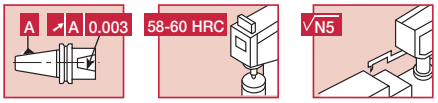

HSK E–ER–BALANCE Balanceable ER Collet Chuck Holder

(Unit: mm)

Cat. No.	HSK-E	Range	D	D1	L	L1	L2	J
HSK E 63 ER16X100 BIN	63	0.5-10	28	44	100	74	45.0	M10
HSK E 63 ER20X100 BIN	63	1-13	34	44	100	74	45.1	M12
HSK E 63 ER25X100 BIN	63	1-16	42	44	100	74	45.2	M16
HSK E 63 ER32X120 BIN	63	2-20	50	60	120	94	48.0	M22x1.5

(1) Blanced to G2.5 20,000 min-1

HSK A–ER–BALANCE

(1) G2.5 / 20,000 min-1

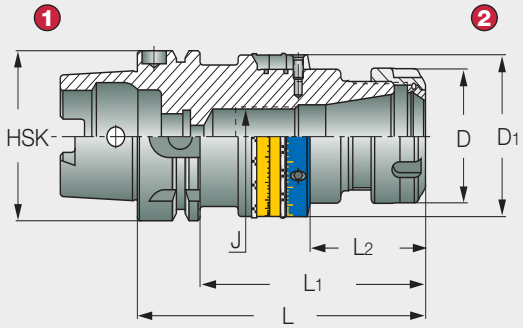

1 HSK DIN69893 Form A
2 DIN6499 ER-BALANCE

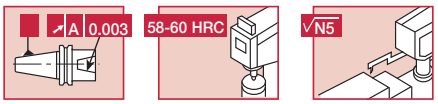

HSK A–ER–BALANCE Balanceable ER Collet Chuck Holder

(Unit: mm)

Cat. No.	HSK-A	Range	D	D1	L	L1	L2	J
HSK A 63 ER16X100 BIN	63	0.5-10	28	44	100	74	45.0	M10
HSK A 63 ER16X160 BIN	63	0.5-10	28	44	160	134	75.0	M10
HSK A 63 ER20X100 BIN	63	1-13	34	44	100	74	45.1	M12
HSK A 63 ER20X160 BIN	63	1-13	34	44	160	134	86.1	M12
HSK A 63 ER25X100 BIN	63	1-16	42	44	100	74	45.2	M16
HSK A 63 ER25X160 BIN	63	1-16	42	44	160	134	86.2	M16
HSK A 63 ER32X120 BIN	63	2-20	50	60	120	94	48.0	M22x1.5
HSK A 63 ER32X160 BIN	63	2-20	50	60	160	134	85.0	M22x1.5
HSK A 63 ER40X120 BIN	63	3-26	63	60	120	94	46.0	M28x1.5

(1) Balanced to G2.5 20,000 min-1

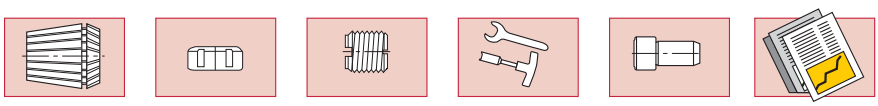

	ER Collet	Nut	Preset Screw	Wrench	Cooling Tube	User Guide
Page	116 - 119	147	149	148, 151	151	113 - 115, 9

Tungaloy Member IMC Group

HSK • TUNGSHORT • Collet Chuck Holder

HSK-A-ER-SHORT

G2.5
20,000 min-1

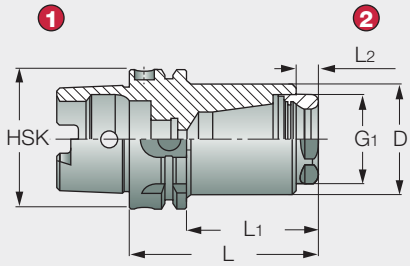

1 **HSK DIN69893 Form A**
2 **DIN6499 ER-SHORT**

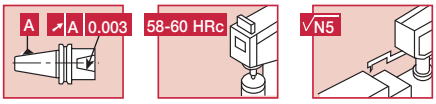

HSK A-ER-SHORT Short ER Collet Chuck Holder

(Unit: mm)

Cat. No.	HSK-A	Range	D	L	L_1	L_2	G_1
HSK A 63 ER32 SHORT	63	2-20	50	84.5	56.1	9.5	M40x1.5
HSK A 100 ER32 SHORT	100	2-20	50	89.5	60.5	9.5	M40x1.5
HSK A 100 ER40 SHORT	100	3-26	70	104.5	75.5	9.5	M50x1.5

HSK • TUNGMAX • Endmill Chuck Holder

HSK A-MAX

G6.3
10,000 min-1

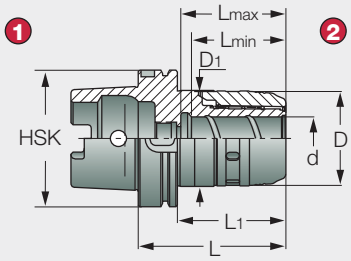

1 **HSK DIN69893 Form A**
2 **TungMax**

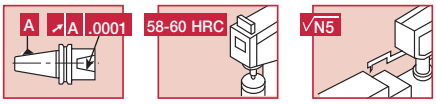

HSK A-MAX Power Chuck Holder

(Unit: mm)

Cat. No.	HSK-A	Range	d	D	D_1	L	L_1	Lmin	Lmax
HSK A63 MAXIN 20x95	63	6-20	20	51	53	95	69	56	66
HSK A63 MAXIN 32x113	63	6-32	32	69	70	113	87	70	85
HSK A100 MAXIN 20x115 (1)	100	6-20	20	51	53	115	86	56	69
HSK A100 MAXIN 32x110 (1)	100	6-32	32	69	70	110	81	70	78
HSK A100 MAXIN 32x135 (1)	100	6-32	32	69	70	135	106	71	87

(1) Balanced to G6.3 8,000 min-1

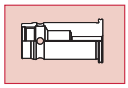
SC Collet
Page 122

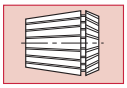
ER Collet
116 - 119

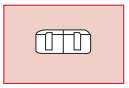
Nut
147

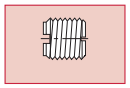
Preset Screw
149

Wrench
148, 151

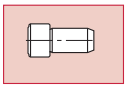
Cooling Tube
151

User Guide
113 - 115, 6, 127 - 129

HSK A-MAX-BALANCE

G6.3
10,000 min-1

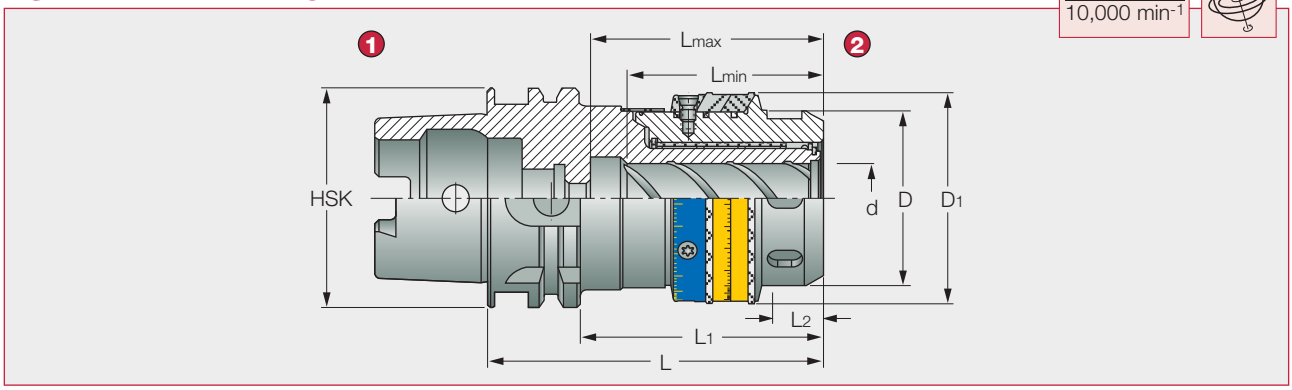

1 **HSK DIN69893 Form A**
2 **TungBalance**

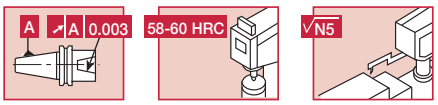

HSK A-MAX-BALANCE Balanceable Power Chuck Holder

(Unit: mm)

Cat. No.	HSK-A	Range	d	D	D1	L	L1	L2	Lmin	Lmax
HSK A63 MAXIN 20x95 BIN (1)	63	6-20	20	51	61	95	69	17.5	56	66
HSK A63 MAXIN 32x113 BIN (1)	63	6-32	32	69	80	113	87	24.9	70	85
HSK A100 MAXIN 20x115 BIN (2)	100	6-20	20	51	61	115	86	17.5	56	69
HSK A100 MAXIN 32x110 BIN (2)	100	6-32	32	69	80	110	81	24.9	70	78

(1) Chucks with taper size HSK A63 can be balanced by the balancing ring up to G2.5 at 20,000 min^{-1}
(2) Chucks with taper size HSK A100 can be balanced by the balancing ring up to G2.5 at 18,000 min^{-1}

SC Collet
User Guide
Page 122 6, 9

Tungaloy
Member IMC Group

HSK • TUNGHYDRO • Hydraulic Chuck Holder

HSK A-HYDRO

G6.3
HSK A 50, 63 = 15,000 min^{-1}
HSK A 80, 100 = 10,000 min^{-1}

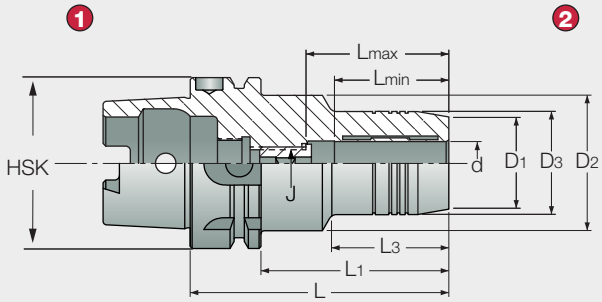

1 **HSK DIN69893 Form A**
2 **TungHydro**

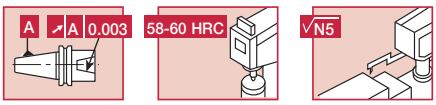

HSK A-HYDRO Hydraulic Chuck Holder

(Unit: mm)

Cat. No.	d	D_1	D_3	D_2	L	L_1	L_3	Lmin	Lmax	J
HSK A 50 HYDRO 6X 80	6	23	26	42	80	54	35	27	37	M5
HSK A 50 HYDRO 8X 80	8	25	28	42	80	54	36	27	37	M6
HSK A 50 HYDRO 10X 85	10	27	30	42	85	59	41	32	42	M8x1
HSK A 50 HYDRO 12X 90	12	29	32	42	90	64	47	37	47	M10x1
HSK A 50 HYDRO 14X 90	14	30	34	42	90	64	49	37	47	M10x1
HSK A 50 HYDRO 16X 95	16	34	38	42	95	69	52	42	52	M12x1
HSK A 50 HYDRO 18X 95	18	36	40	42	95	69	52	42	52	M12x1
HSK A 50 HYDRO 20X100	20	38	42	42	100	74	74	42	52	M16x1
HSK A 63 HYDRO 6X 80	6	23	26	50	80	54	33	27	37	M5
HSK A 63 HYDRO 8X 80	8	25	28	50	80	54	33	27	37	M6
HSK A 63 HYDRO 10X 85	10	27	30	50	85	59	39	32	42	M8x1
HSK A 63 HYDRO 12X 90	12	29	32	50	90	64	44	37	47	M10x1
HSK A 63 HYDRO 14X 90	14	30	34	50	90	64	46	37	47	M10x1
HSK A 63 HYDRO 16X 95	16	34	38	50	95	69	52	42	52	M12x1
HSK A 63 HYDRO 18X 95	18	36	40	50	95	69	52	42	52	M12x1
HSK A 63 HYDRO 20X100	20	38	42	50	100	74	58	42	52	M16x1
HSK A 63 HYDRO 25X120	25	46	50	50	120	94	94	48	58	M16x1
HSK A 63 HYDRO 32X125	32	56	60	50	125	99	83	52	62	M16x1
HSK A 80 HYDRO 6X 85	6	23	26	50	85	59	37	27	37	M5
HSK A 80 HYDRO 8X 85	8	25	28	50	85	59	37	27	37	M6
HSK A 80 HYDRO 10X 90	10	27	30	50	90	64	42	32	42	M8x1
HSK A 80 HYDRO 12X 95	12	29	32	50	95	69	47	37	47	M10x1
HSK A 80 HYDRO 14X 95	14	30	34	50	95	69	47	37	47	M10x1
HSK A 80 HYDRO 16X100	16	34	38	50	100	74	52	42	52	M12x1
HSK A 80 HYDRO 18X100	18	36	40	50	100	74	52	42	52	M12x1
HSK A 80 HYDRO 20X105	20	38	42	50	105	79	52	42	52	M16x1
HSK A 80 HYDRO 25X115	25	46	50	50	115	89	58	48	58	M16x1
HSK A 80 HYDRO 32X120	32	56	60	50	120	94	62	52	62	M16x1

Clamping Wrench (wrench HYDRO HEX 4) should be ordered separately.
Note: Available are reduction sleeves for 12, 20, 25 and 32 mm bore diameters.
Chucking forces will significantly reduce if reduction sleeves are used (ordered separately).

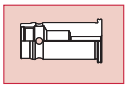

SC Collet
User Guide
Page 122 6, 127 - 129

HSK A-HYDRO

G6.3
10,000 min-1

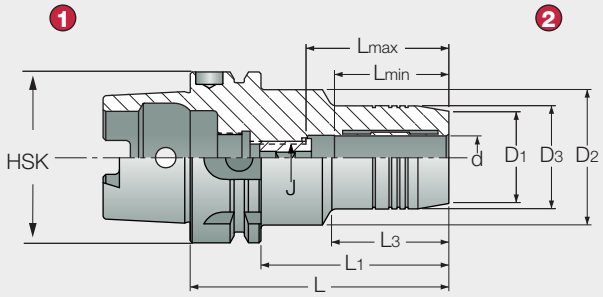

1 **HSK DIN69893 Form A**
2 **TungHydro**

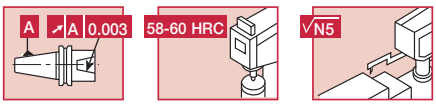

HSK A-HYDRO Hydraulic Chuck Holder

(Unit: mm)

Cat. No.	d	D_1	D_3	D_2	L	L_1	L_3	Lmin	Lmax	J
HSK A 100 HYDRO 6X 85	6	23	26	63	85	56	29	27	37	M5
HSK A 100 HYDRO 8X 85	8	25	28	63	85	56	29	27	37	M6
HSK A 100 HYDRO 10X 90	10	27	30	63	90	61	35	32	42	M8x1
HSK A 100 HYDRO 12X 95	12	29	32	63	95	66	40	37	47	M10x1
HSK A 100 HYDRO 14X 95	14	30	34	63	95	66	42	37	47	M10x1
HSK A 100 HYDRO 16X100	16	34	38	63	100	71	47	42	52	M12x1
HSK A 100 HYDRO 18X100	18	36	40	63	100	71	48	42	52	M12x1
HSK A 100 HYDRO 20X105	20	38	42	63	105	76	54	42	52	M16x1
HSK A 100 HYDRO 25X115	25	46	50	63	115	86	51	48	58	M16x1
HSK A 100 HYDRO 32X120	32	56	60	63	120	91	59	52	62	M16x1

Clamping Wrench (wrench HYDRO HEX 4) should be ordered separately.
Note: Available are reduction sleeves for 12, 20, 25 and 32 mm bore diameters.
Chucking forces will significantly reduce if reduction sleeves are used (ordered separately).

Page ☞
SC Collet 122
User Guide 6, 127 - 129

HSK A-HYDRO

G6.3
15,000 min-1

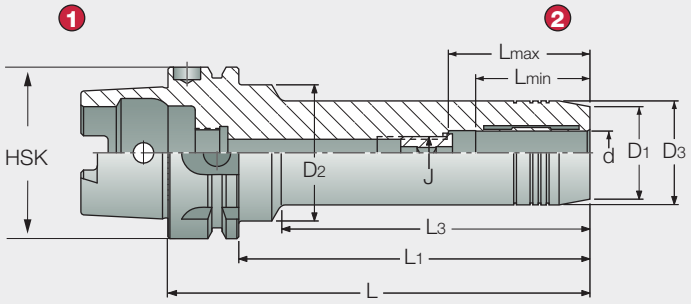

1 **HSK DIN69893 Form A**
2 **TungHydro**

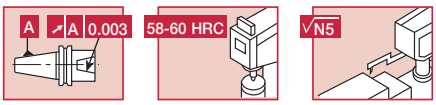

HSK A-HYDRO Long Projection Hydraulic Chuck Holder

(Unit: mm)

Cat. No.	d	D1	D3	D2	L	L1	L3	Lmin	Lmax	J
HSK A 63 HYDRO 6X150	6	23	26	50	150	124	103	27	37	M5
HSK A 63 HYDRO 6X200	6	23	26	50	200	174	153	27	37	M5
HSK A 63 HYDRO 8X150	8	25	28	50	150	124	104	27	37	M6
HSK A 63 HYDRO 8X200	8	25	28	50	200	174	154	27	37	M6
HSK A 63 HYDRO 10X150	10	27	30	50	150	124	104	32	42	M8x1
HSK A 63 HYDRO 10X200	10	27	30	50	200	174	154	32	42	M8x1
HSK A 63 HYDRO 12X150	12	29	32	50	150	124	105	37	47	M10x1
HSK A 63 HYDRO 12X200	12	29	32	50	200	174	155	37	47	M10x1
HSK A 63 HYDRO 14X150	14	30	34	50	150	124	105	37	47	M10x1
HSK A 63 HYDRO 14X200	14	30	34	50	200	174	155	37	47	M10x1
HSK A 63 HYDRO 16X150	16	34	38	50	150	124	106.5	42	52	M12x1
HSK A 63 HYDRO 16X200	16	34	38	50	200	174	156.5	42	52	M12x1
HSK A 63 HYDRO 18X150	18	36	40	50	150	124	107	42	52	M12x1
HSK A 63 HYDRO 18X200	18	36	40	50	200	174	157	42	52	M12x1
HSK A 63 HYDRO 20X150	20	38	42	50	150	124	108	42	52	M12x1
HSK A 63 HYDRO 20X200	20	38	42	50	200	174	158	42	52	M12x1
HSK A 63 HYDRO 25X150	25	46	50	50	150	124	-	48	58	M16x1
HSK A 63 HYDRO 25X200	25	46	50	50	200	174	-	48	58	M16x1

Clamping Wrench (wrench HYDRO HEX 4) should be ordered separately.
Note: Available are reduction sleeves for 12, 20, 25 and 32 mm bore diameters.
Chucking forces will significantly reduce if reduction sleeves are used (ordered separately).

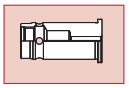
SC Collet

User Guide

Page 122 6, 127 - 129

HSK A-HYDRO

G6.3
10,000 min-1

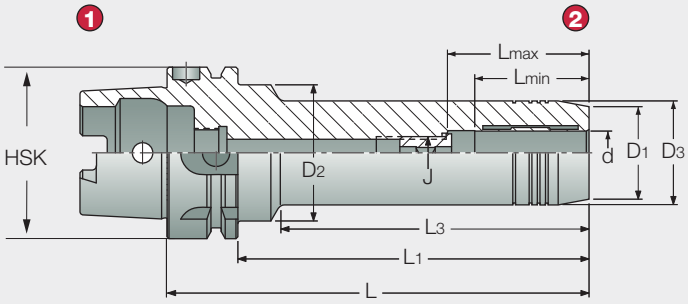

1 **HSK DIN69893 Form A**
2 **TungHydro**

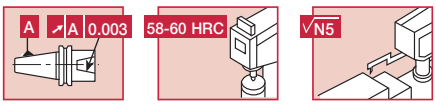

HSK A-HYDRO Long Projection Hydraulic Chuck Holder

(Unit: mm)

Cat. No.	d	D1	D3	D2	L	L1	L3	Lmin	Lmax	J
HSK A 100 HYDRO 6X150	6	23	26	50	150	124	94	27	37	M6
HSK A 100 HYDRO 6X200	6	23	26	50	200	174	144	27	37	M6
HSK A 100 HYDRO 8X150	8	25	28	50	150	124	94.5	27	37	M6
HSK A 100 HYDRO 8X200	8	25	28	50	200	174	144.5	27	37	M6
HSK A 100 HYDRO 10X150	10	27	30	50	150	124	95	32	42	M8x1
HSK A 100 HYDRO 10X200	10	27	30	50	200	174	145	32	42	M8x1
HSK A 100 HYDRO 12X150	12	29	32	50	150	124	95.5	37	47	M10x1
HSK A 100 HYDRO 12X200	12	29	32	50	200	174	145.5	37	47	M10x1
HSK A 100 HYDRO 14X150	14	30	34	50	150	124	97	37	47	M10x1
HSK A 100 HYDRO 14X200	14	30	34	50	200	174	147	37	47	M10x1
HSK A 100 HYDRO 16X150	16	34	38	50	150	124	97.5	42	52	M12x1
HSK A 100 HYDRO 16X200	16	34	38	50	200	174	147.5	42	52	M12x1
HSK A 100 HYDRO 18X150	18	36	40	50	150	124	98	42	52	M12x1
HSK A 100 HYDRO 18X200	18	36	40	50	200	174	148	42	52	M12x1
HSK A 100 HYDRO 20X150	20	38	42	50	150	124	99	42	52	M12x1
HSK A 100 HYDRO 20X200	20	38	42	50	200	174	149	42	52	M12x1
HSK A 100 HYDRO 25X150	25	46	50	50	150	124	-	48	58	M16x1
HSK A 100 HYDRO 25X200	25	46	50	50	200	174	-	48	58	M16x1
HSK A 100 HYDRO 32X150	32	56	60	60	150	124	-	52	62	M16x1
HSK A 100 HYDRO 32X200	32	56	60	60	200	174	-	52	62	M16x1

Clamping Wrench (wrench HYDRO HEX 4) should be ordered separately.
Note: Available are reduction sleeves for 12, 20, 25 and 32 mm bore diameters.
Chucking forces will significantly reduce if reduction sleeves are used (ordered separately).

SC Collet
User Guide
Page 122 6, 127 - 129

Tungaloy
Member IMC Group

HSK • Side Lock Endmill Chuck Holder

HSK A-EM

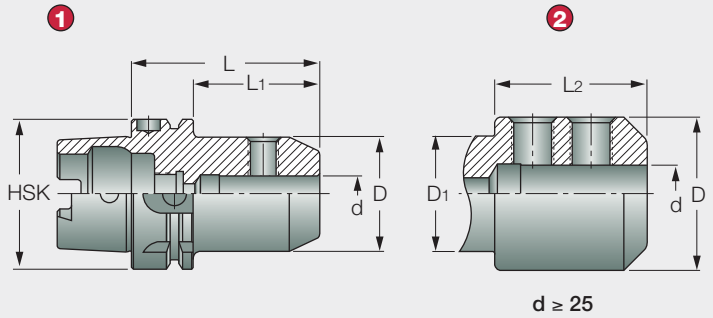

1 **HSK DIN69893 Form A**
2 **DIN6359**
DIN1835 Form B (Weldon type)

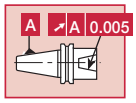

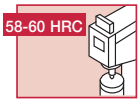

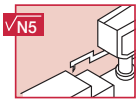

HSK A-EM Endmill Chuck Holder (Weldon type)

(Unit: mm)

Cat. No.	HSK-A	d	D	D_1	L	L_1	L_2
HSK A 50 EM 6X 65	50	6	25	-	65	39	-
HSK A 50 EM 8X 65	50	8	28	-	65	39	-
HSK A 50 EM 10X 65	50	10	35	-	65	39	-
HSK A 50 EM 12X 80	50	12	42	41.8	80	54	38.0
HSK A 50 EM 14X 80	50	14	44	41.8	80	54	38.0
HSK A 50 EM 16X 80	50	16	48	41.8	80	54	38.0
HSK A 50 EM 18X 80	50	18	50	41.8	80	54	38.0
HSK A 50 EM 20X 80	50	20	52	41.8	80	54	38.0
HSK A 63 EM 6X 65	63	6	25	-	65	39	-
HSK A 63 EM 8X 65	63	8	28	-	65	39	-
HSK A 63 EM 10X 65	63	10	35	-	65	39	-
HSK A 63 EM 12X 80	63	12	42	-	80	54	-
HSK A 63 EM 14X 80	63	14	44	-	80	54	-
HSK A 63 EM 16X 80	63	16	48	-	80	54	-
HSK A 63 EM 18X 80	63	18	50	-	80	54	-
HSK A 63 EM 20X 80	63	20	52	-	80	54	-
HSK A 63 EM 25X110	63	25	65	52.0	110	84	65.5
HSK A 63 EM 32X110	63	32	72	52.0	110	84	65.5
HSK A 100 EM 6X 80	100	6	25	-	80	51	-
HSK A 100 EM 8X 80	100	8	28	-	80	51	-
HSK A 100 EM 10X 80	100	10	35	-	80	51	-
HSK A 100 EM 12X 80	100	12	42	-	80	51	-
HSK A 100 EM 14X 80	100	14	44	-	80	51	-
HSK A 100 EM 16X100	100	16	48	-	100	71	-
HSK A 100 EM 18X100	100	18	50	-	100	71	-
HSK A 100 EM 20X100	100	20	52	-	100	71	-
HSK A 100 EM 25X100	100	25	65	-	100	71	-
HSK A 100 EM 32X100	100	32	72	-	100	71	-

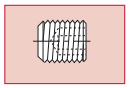
Lock Screw

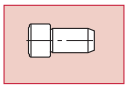
Cooling Tube

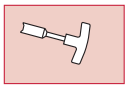
Wrench

Page ☞ 150 151 151

HSK • Side Lock Endmill Chuck Holder

HSK A-EM-E

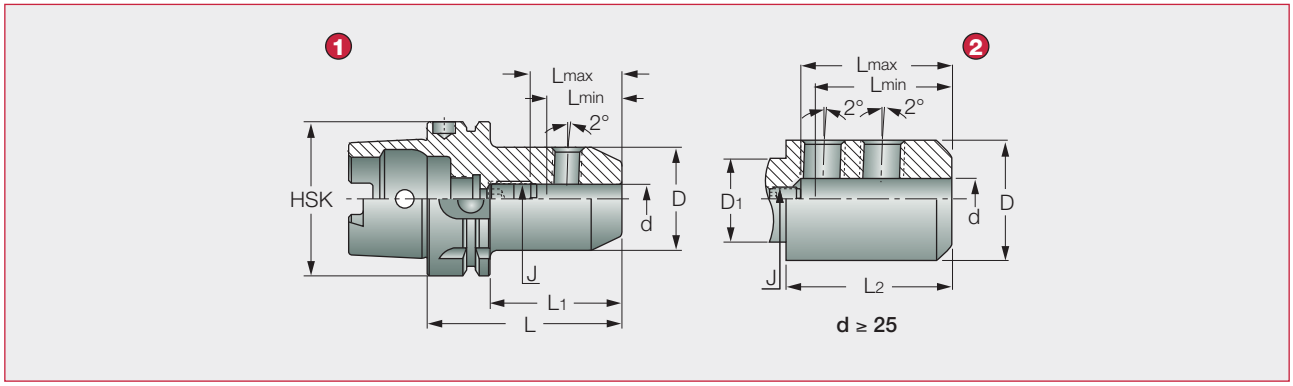

1 **HSK DIN69893 Form A**
DIN6359
2 **DIN1835 Form E (Whistle Notch type)**

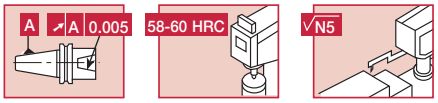

HSK A-EM-E Endmill Chuck Holder (Whistle Notch type)

(Unit: mm)

Cat. No.	HSK-A	d	D	D1	L	L1	L2	Lmin	Lmax	J (1)	Hex Key
HSK A 50 EM 6X 80 E	50	6	25	-	80	54	-	30	38	M5	2.5
HSK A 50 EM 8X 80 E	50	8	28	-	80	54	-	35	40	M6	3.0
HSK A 50 EM 10X 80 E	50	10	35	-	80	54	-	39	44	M8	4.0
HSK A 50 EM 12X 90 E	50	12	42	41.8	90	64	48.0	44	49	M10	5.0
HSK A 50 EM 14X 90 E	50	14	44	41.8	90	64	48.0	44	49	M10	5.0
HSK A 50 EM 16X 90 E	50	16	48	41.8	90	64	48.0	47	52	M12	6.0
HSK A 50 EM 18X 90 E	50	18	50	41.8	90	64	48.0	47	52	M12	6.0
HSK A 50 EM 20X100 E	50	20	52	41.8	100	74	58.0	49	54	M16	8.0
HSK A 63 EM 6X 80 E	63	6	25	-	80	54	-	32	40	M5	2.5
HSK A 63 EM 8X 80 E	63	8	28	-	80	54	-	35	40	M6	3.0
HSK A 63 EM 10X 80 E	63	10	35	-	80	54	-	39	44	M8	4.0
HSK A 63 EM 12X 90 E	63	12	42	-	90	64	-	44	49	M10	5.0
HSK A 63 EM 14X 90 E	63	14	44	-	90	64	-	44	49	M10	5.0
HSK A 63 EM 16X100 E	63	16	48	-	100	74	-	47	52	M12	6.0
HSK A 63 EM 18X100 E	63	18	50	-	100	74	-	47	55	M12	6.0
HSK A 63 EM 20X100 E	63	20	52	-	100	74	-	49	54	M16	8.0
HSK A 63 EM 25X110 E	63	25	65	52.0	110	84	65.5	54	61	M16	8.0
HSK A 63 EM 32X110 E	63	32	72	52.0	110	84	65.5	58	63	M20X1.5	10.0
HSK A 100 EM 6X 90 E	100	6	25	-	90	61	-	35	40	M5	2.5
HSK A 100 EM 8X 90 E	100	8	28	-	90	61	-	35	40	M6	3.0
HSK A 100 EM 10X 90 E	100	10	35	-	90	61	-	39	44	M8	4.0
HSK A 100 EM 12X100 E	100	12	42	-	100	71	-	44	54	M10	5.0
HSK A 100 EM 14X100 E	100	14	44	-	100	71	-	44	54	M10	5.0
HSK A 100 EM 16X100 E	100	16	48	-	100	71	-	47	52	M12	6.0
HSK A 100 EM 18X100 E	100	18	50	-	100	71	-	47	52	M12	6.0
HSK A 100 EM 20X110 E	100	20	52	-	110	81	-	49	54	M16	8.0
HSK A 100 EM 25X120 E	100	25	65	-	120	91	-	54	61	M20X1.5	10.0
HSK A 100 EM 32X120 E	100	32	72	-	120	91	-	58	63	M20X1.5	10.0

(1) The adjustment screw has an internal coolanrt hole.

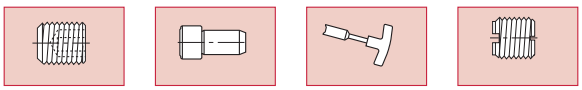

	Lock Screw	Cooling Tube	Wrench	Preset Screw
Page	150	151	151	151

HSK A 63-SHRINK

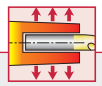
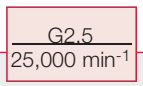

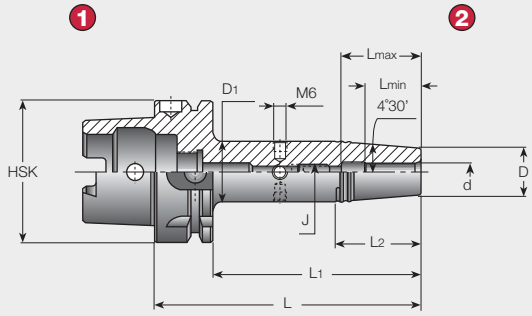

1. **HSK DIN69893 Form A**
2. **SRKIN**
   (for carbide and HSS shank)

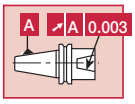

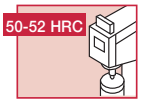

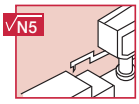

HSK A 63-SHRINK Thermal SHRINK Holder (SRKIN type, for carbide and HSS shank) (Unit: mm)

Cat. No.	d	D	D1	L	L1	L2	Lmin	Lmax	J	Hex Key
HSK A 63 SRKIN 6X 80	6	21	27	80	54	38	25	36	M5	2.5
HSK A 63 SRKIN 6X120	6	21	27	120	94	38	25	36	M5	2.5
HSK A 63 SRKIN 6X160	6	21	27	160	134	38	25	36	M5	2.5
HSK A 63 SRKIN 8X 80	8	21	27	80	54	38	25	36	M6	3.0
HSK A 63 SRKIN 8X120	8	21	27	120	94	38	25	36	M6	3.0
HSK A 63 SRKIN 8X160	8	21	27	160	134	38	25	36	M6	3.0
HSK A 63 SRKIN 10X 85	10	24	32	85	59	51	31	42	M8	4.0
HSK A 63 SRKIN 10X120	10	24	32	120	94	51	31	42	M8	4.0
HSK A 63 SRKIN 10X160	10	24	32	160	134	51	31	42	M8	4.0
HSK A 63 SRKIN 12X 90	12	24	32	90	64	51	36	42	M8	4.0
HSK A 63 SRKIN 12X120	12	24	32	120	94	51	36	47	M10	5.0
HSK A 63 SRKIN 12X160	12	24	32	160	134	51	36	47	M10	5.0
HSK A 63 SRKIN 14X 90	14	27	34	90	64	45	36	47	M10	5.0
HSK A 63 SRKIN 14X120	14	27	34	120	94	45	36	47	M10	5.0
HSK A 63 SRKIN 14X160	14	27	34	160	134	45	36	47	M10	5.0
HSK A 63 SRKIN 16X75	16	27	34	75	49	-	39	50	-	-
HSK A 63 SRKIN 16X 95	16	27	34	95	69	44	39	50	M12	6.0
HSK A 63 SRKIN 16X120	16	27	34	120	94	44	39	50	M12	6.0
HSK A 63 SRKIN 16X160	16	27	34	160	134	44	39	50	M12	6.0
HSK A 63 SRKIN 18X 95	18	33	42	95	69	57	39	50	M12	6.0
HSK A 63 SRKIN 18X120	18	33	42	120	94	57	39	50	M12	6.0
HSK A 63 SRKIN 18X160	18	33	42	160	134	57	39	50	M12	6.0
HSK A 63 SRKIN 20X75	20	33	41	75	49	-	41	50	-	-
HSK A 63 SRKIN 20X100	20	33	42	100	74	57	41	52	M16	8.0
HSK A 63 SRKIN 20X120	20	33	42	120	94	57	41	52	M16	8.0
HSK A 63 SRKIN 20X160	20	33	42	160	134	57	41	52	M16	8.0
HSK A 63 SRKIN 25X85	25	44	53	85	59	-	47	58	-	-
HSK A 63 SRKIN 25X115	25	44	53	115	89	55	47	58	M16	8.0
HSK A 63 SRKIN 32X85	32	44	53	85	59	-	47	58	-	-
HSK A 63 SRKIN 32X120	32	44	53	120	94	55	47	58	M16	8.0

Use only inductive heating device for SRKIN holders.

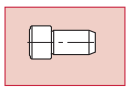
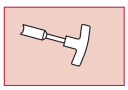
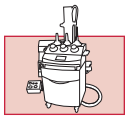

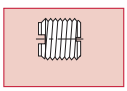

	Cooling Tube	Wrench	Induction	User Guide	Preset Screw
Page	151	151	136	131 - 132	150

HSK A 100-SHRINK

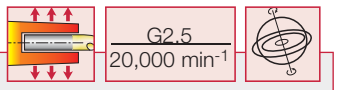

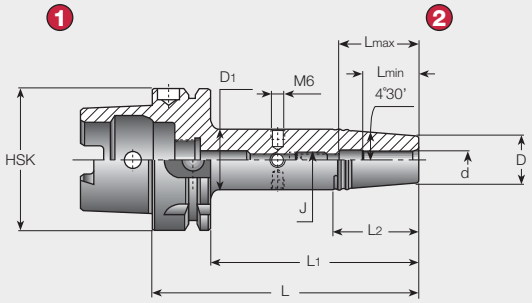

1 **HSK DIN69893 Form A**
2 **SRKIN**
(for carbide and HSS shank)

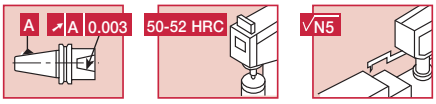

HSK A 100-SHRINK Thermal SHRINK Holder (SRKIN type, for carbide and HSS shank) (Unit: mm)

Cat. No.	d	D	D1	L	L1	L2	Lmin	Lmax	J	Hex Key
HSK A 100 SRKIN 6X 85	6	21	27	85	56	38	25	36	M5	2.5
HSK A 100 SRKIN 6X120	6	21	27	120	91	38	25	36	M5	2.5
HSK A 100 SRKIN 6X160	6	21	27	160	131	38	25	36	M6	3.0
HSK A 100 SRKIN 8X 85	8	21	27	85	56	38	25	36	M6	3.0
HSK A 100 SRKIN 8X120	8	21	27	120	91	38	25	36	M6	3.0
HSK A 100 SRKIN 8X160	8	21	27	160	131	38	25	36	M6	3.0
HSK A 100 SRKIN 10X 90	10	24	32	90	61	51	31	42	M8	4.0
HSK A 100 SRKIN 10X120	10	24	32	120	91	51	31	42	M8	4.0
HSK A 100 SRKIN 10X160	10	24	32	160	131	51	31	42	M8	4.0
HSK A 100 SRKIN 12X 95	12	24	32	95	66	51	36	47	M10	5.0
HSK A 100 SRKIN 12X120	12	24	32	120	91	51	36	47	M10	5.0
HSK A 100 SRKIN 12X160	12	24	32	160	131	51	36	47	M10	5.0
HSK A 100 SRKIN 14X 95	14	27	34	95	66	45	36	47	M10	5.0
HSK A 100 SRKIN 14X120	14	27	34	120	91	45	36	47	M10	5.0
HSK A 100 SRKIN 14X160	14	27	34	160	131	45	36	47	M10	5.0
HSK A 100 SRKIN 16X100	16	27	34	100	71	45	39	50	M12	6.0
HSK A 100 SRKIN 16X120	16	27	34	120	91	45	39	50	M12	6.0
HSK A 100 SRKIN 16X160	16	27	34	160	131	45	39	50	M12	6.0
HSK A 100 SRKIN 18X100	18	33	42	100	71	57	39	50	M12	6.0
HSK A 100 SRKIN 18X160	18	33	42	160	131	57	39	50	M12	6.0
HSK A 100 SRKIN 20X105	20	33	42	105	76	57	41	52	M16	8.0
HSK A 100 SRKIN 20X160	20	33	42	160	131	57	41	52	M16	8.0
HSK A 100 SRKIN 25X115	25	44	53	115	86	57	47	58	M16	8.0
HSK A 100 SRKIN 32X120	32	44	53	120	91	57	47	58	M16	8.0

Use only inductive heating device for SRKIN holders.

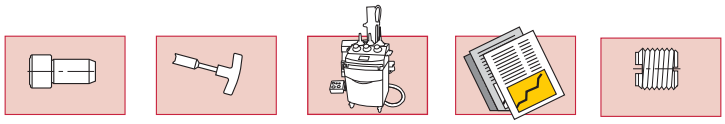

	Cooling Tube	Wrench	Induction	User Guide	Preset Screw
Page	151	151	136	131 - 132	150

Tungaloy
Member IMC Group

HSK FM-SHRINK

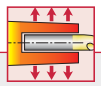

G2.5
30,000 min-1

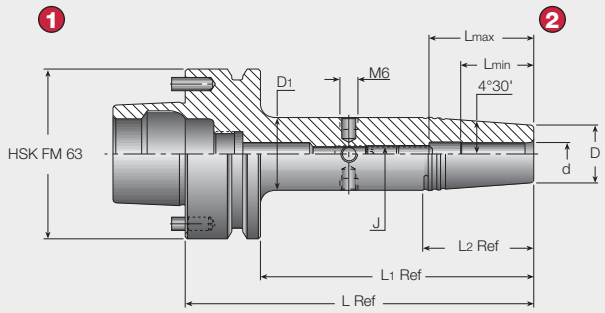

Used for MAKINO'S machine models MAG3, MAG4 and V77.
These tools are based on the HSK63F type with two drive pins which improve torque transmission.

1. **HSK DIN69893 FM** [1]
2. **SRKIN**
   (for carbide and HSS shank)

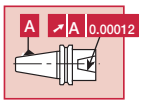

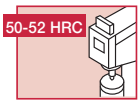

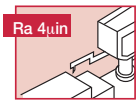

HSK FM-SHRINK Thermal SHRINK Holder (SHRKIN type, for carbide and HSS shank) (Unit: mm)

Cat. No.	d	D	D_1	L	L_1	L_2	Lmin	Lmax	J	Hex Key
HSK FM 63 SRKIN 6x80	6	21	27.0	80	54	38.0	25	36	M5	2.5
HSK FM 63 SRKIN 8x80	8	21	27.0	80	54	38.0	25	36	M6	3.0
HSK FM 63 SRKIN 10x85	10	24	32.0	85	59	50.5	31	42	M8	4.0
HSK FM 63 SRKIN 12x90	12	24	32.0	90	64	50.5	36	47	M10	5.0
HSK FM 63 SRKIN 14x90	14	27	34.0	90	64	44.5	36	47	M10	5.0
HSK FM 63 SRKIN 16x95	16	27	34.0	95	69	44.5	39	50	M12	6.0
HSK FM 63 SRKIN 18x95	18	33	42.0	95	69	57.0	39	50	M12	6.0
HSK FM 63 SRKIN 20x100	20	33	42.0	100	74	57.0	41	52	M16	8.0
HSK FM 63 SRKIN 25x115	25	44	52.7	115	89	55.0	47	58	M16	8.0
HSK FM 63 SRKIN 32x120	32	44	52.7	120	94	55.0	47	58	M16	8.0

[1] The driving pins can be removed, turning the toolholder into a standard HSK F 63 type.

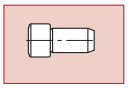
Cooling Tube

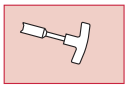
Wrench

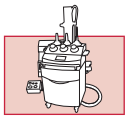
Induction

User Guide

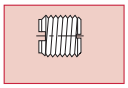
Preset Screw

Page ☞ 151 | 151 | 136 | 131 - 132 | 150

HSK E 32/40/50-SHRINK

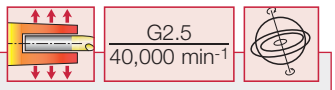

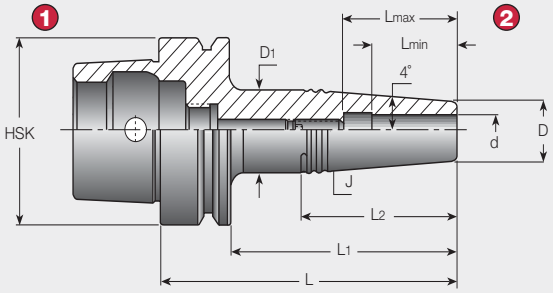

1 **HSK DIN69893 Form E**
2 **SRK**
(for carbide shank)

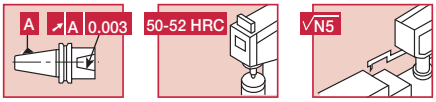

HSK E 30/40/50 SHRINK Thermal SHRINK Holder (SRK type, for carbide shank) (2) (3)

(Unit: mm)

Cat. No.	d	D_1	D	L	L_1	L_2	Lmin	Lmax	J	Hex Key
HSK E 32 SRK 3X 45	3	13.0	10	65	45	30	10	16	M4	2.0
HSK E32 SRK 4X 45	4	15.0	10	65	45	35	12	18	M4	2.0
HSK E 32 SRK 5X 45	5	15.0	10	65	45	35	15	25	M4	2.0
HSK E 32 SRK 6X 45	6	16.0	11	65	45	35	18	28	M4	2.0
HSK E 32 SRK 8X 45	8	20.0	14	65	45	42	25	35	M4	2.0
HSK E 32 SRK 10X 45	12	22.0	16	65	45	42	30	40	M4	2.0
HSK E 32 SRK 12X 45	12	25.0	20	65	45	35.6	32	40	M4	2.0
HSK E 40 SRK 3X 45	3	13.0	10	65	45	30	10	16	M5	2.5
HSK E 40 SRK 3X 80	3	19.0	10	100	80	64	10	16	M5	2.5
HSK E 40 SRK 4X 45	4	15.0	10	65	45	35	12	18	M5	2.5
HSK E 40 SRK 4X 80	4	19.0	10	100	80	64	12	18	M5	2.5
HSK E 40 SRK 5X 45	5	15.0	10	65	45	35	15	25	M4	2.0
HSK E 40 SRK 5X 80	5	19.0	10	100	80	64	15	25	M4	2.0
HSK E 40 SRK 6X 45	6	16.0	11	65	45	35	18	28	M5	2.5
HSK E 40 SRK 6X 80	6	20.0	11	100	80	64	18	28	M5	2.5
HSK E 40 SRK 8X 45	8	20.0	14	65	45	42	25	35	M5	2.5
HSK E 40 SRK 8X 80	8	23.0	14	100	80	64	25	35	M6	3.0
HSK E 40 SRK 10X 45	10	22.0	16	65	45	42	30	40	M5	2.5
HSK E 40 SRK 10X 80	10	24.5	16	100	80	60	30	40	M8	4.0
HSK E 40 SRK 12X 45	12	26.0	20	65	45	42	32	42	M5	2.5
HSK E 40 SRK 12X 80	12	28.0	20	100	80	56	32	42	M10	5.0
HSK E 50 SRK 3X 45 (1)	3	15.0	10	71	45	36	10	16	M5	2.5
HSK E 50 SRK 3X 80 (1)	3	19.0	10	106	80	64	10	16	M5	2.5
HSK E 50 SRK 4X 45 (1)	4	15.0	10	71	45	36	12	18	M5	2.5
HSK E 50 SRK 4X 80 (1)	4	19.0	10	106	80	64	12	18	M5	2.5
HSK E 50 SRK 5X 45 (1)	5	15.0	10	71	45	36	15	21	M6	3.0
HSK E 50 SRK 5X 80 (1)	5	19.0	10	106	80	64	15	21	M6	3.0
HSK E 50 SRK 6X 45 (1)	6	16.0	11	71	45	36	18	28	M5	2.5
HSK E 50 SRK 6X 80 (1)	6	20.0	11	106	80	64	18	28	M5	2.5
HSK E 50 SRK 8X 45 (1)	8	20.0	14	71	45	43	25	35	M6	3.0
HSK E 50 SRK 8X 80 (1)	8	23.0	14	106	80	64	25	35	M6	3.0
HSK E 50 SRK 10X 45 (1)	10	22.0	16	71	45	42	30	37	M6	3.0
HSK E 50 SRK 10X 80 (1)	10	24.5	16	106	80	60	30	40	M8	4.0
HSK E 50 SRK 12X 45 (1)	12	26.0	20	71	45	42	32	39	M6	3.0
HSK E 50 SRK 12X 80 (1)	12	28.0	20	106	80	57	32	42	M10	5.0

(1) Balanced to G2.5 35,000 min-1

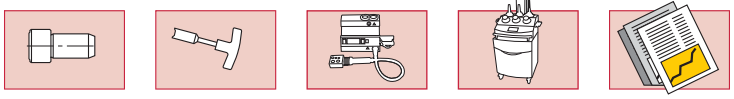

Cooling Tube	Wrench	Thermal (2)	Induction (3)	User Guide
151	151	137	136	131 - 132

Tungaloy
Member IMC Group

A HSK E 63-SHRINK

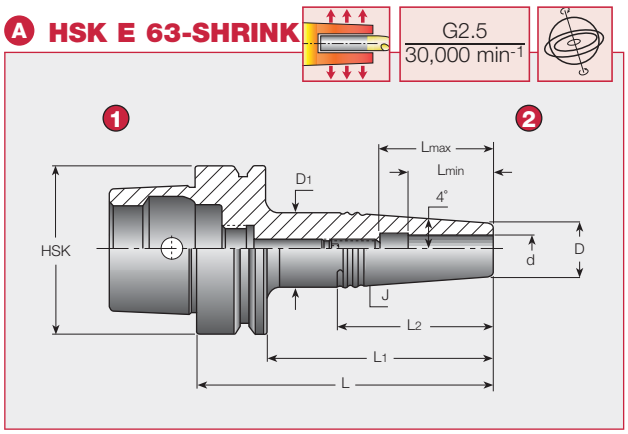

B HSK A 63-SHRINK

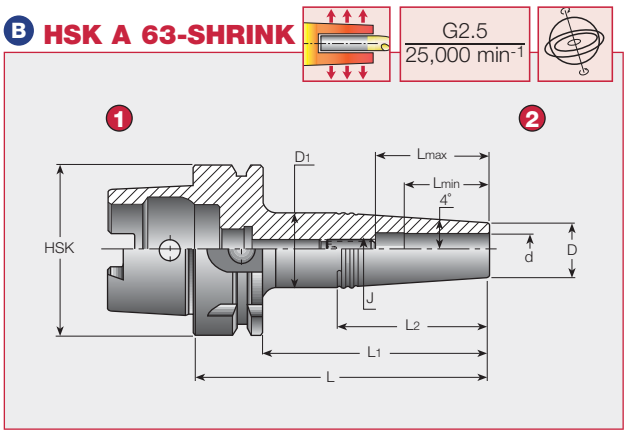

1. **HSK DIN69893 Form E**
2. **SRK (for carbide shank)**

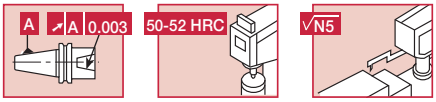

1. **HSK DIN69893 Form A**
2. **SRK (for carbide shank)**

A HSK E 63-SHRINK Thermal SHRINK Holder (SRK type, for carbide shank) (2) (3) (Unit: mm)

Cat. No.	d	D1	D	L	L1	L2	Lmin	Lmax	J	Hex Key
HSK E 63 SRK 3X 50	3	17.0	10	76	50	48	10	16	M6	3
HSK E 63 SRK 3X 80	3	19.0	10	106	80	64	10	16	M6	3
HSK E 63 SRK 4X 50	4	17.0	10	76	50	48	12	18	M6	3
HSK E 63 SRK 4X 80	4	19.0	10	106	80	64	12	18	M6	3
HSK E 63 SRK 5X 50	5	15.0	10	71	45	36	15	21	M6	3
HSK E 63 SRK 5X 80	5	19.0	10	106	80	64	15	21	M6	3
HSK E 63 SRK 6X 50	6	18.0	11	76	50	48	18	24	M8	4
HSK E 63 SRK 6X 80	6	20.0	11	106	80	64	18	24	M8	4
HSK E 63 SRK 8X 50	8	21.0	14	76	50	48	25	35	M6	3
HSK E 63 SRK 8X 80	8	23.0	14	106	80	64	25	35	M6	3
HSK E 63 SRK 10X 50	10	23.0	16	76	50	48	30	40	M8	4
HSK E 63 SRK 10X 80	10	24.5	16	106	80	60	30	40	M8	4
HSK E 63 SRK 12X 50	12	27.0	20	76	50	48	32	42	M8	4
HSK E 63 SRK 12X 80	12	28.0	20	106	80	57	32	42	M10	5
HSK E 63 SRK 12X 90	12	28.0	20	116	90	57	32	43	M10	5

B HSK A 63-SHRINK Thermal SHRINK Holder (SRK type, for carbide shank) (2) (3) (Unit: mm)

Cat. No.	d	D1	D	L	L1	L2	Lmin	Lmax	J	Hex Key
HSK A 63 SRK 3X 50	3	17.0	10	76	50	-	10	16	M6	3
HSK A 63 SRK 3X 85	3	21.0	10	111	85	79	10	16	M6	3
HSK A 63 SRK 4X 50	4	17.0	10	76	50	-	12	18	M6	3
HSK A 63 SRK 4X 85	4	21.0	10	111	85	79	12	18	M6	3
HSK A 63 SRK 5X 50	5	17.0	10	76	50	-	15	21	M6	3
HSK A 63 SRK 5X 85	5	21.0	10	111	85	79	15	21	M6	3
HSK A 63 SRK 6X 50	6	18.0	11	76	50	-	18	24	M8	4
HSK A 63 SRK 6X 85	6	22.0	11	111	85	79	18	24	M8	4
HSK A 63 SRK 8X 50	8	20.0	14	76	50	43	25	36	M6	3
HSK A 63 SRK 8X 85	8	23.0	14	111	85	64	25	36	M6	3
HSK A 63 SRK 10X 50	10	23.0	16	76	50	-	30	41	M8	4
HSK A 63 SRK 10X 85	10	26.0	16	111	85	72	30	41	M8	4
HSK A 63 SRK 12X 50	12	27.0	20	76	50	-	32	43	M8	4
HSK A 63 SRK 12X 85	12	30.0	20	111	85	72	32	43	M8	4

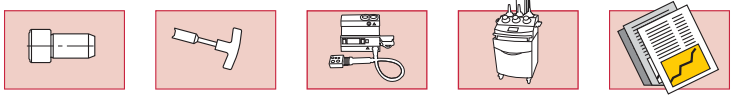

Cooling Tube	Wrench	Thermal (2)	Induction (3)	User Guide
151	151	138	136	131 - 132

HSK • Shell Mill Holder

HSK E-SEM

G2.5
15,000 min-1

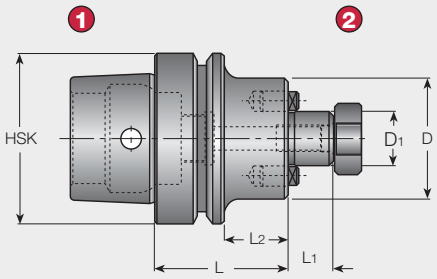

1 **HSK DIN69893 Form E**
2 **ISO 3937**

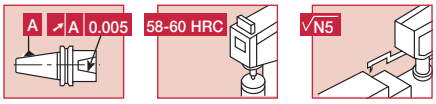

HSK E-SEM Shell Mill Holder - Metric

(Unit: mm)

Cat. No.	HSK-E	D_1	D	L	L_2	L_1
HSK E 32 SEM 16x50	32	16	38	50	30	17
HSK E 32 SEM 22x50	32	22	47	50	30	19
HSK E 40 SEM 16x50	40	16	38	50	30	17
HSK E 40 SEM 22x50	40	22	47	50	30	19
HSK E 50 SEM 22X 60	50	22	47	60	34	19
HSK E 63 SEM 16X 50	63	16	38	50	24	17
HSK E 63 SEM 22X 50	63	22	47	50	24	19

HSK E-SEM Shell Mill Holder - Inch

(Unit: mm)

Cat. No.	HSK-E	D_1	D	L	L_2	L_1
HSK E 32 SEM 3/4X2	32	19.05	44.5	50.8	30.8	17
HSK E 40 SEM 3/4X2.000	40	19.05	45	50.8	30.8	17
HSK E 50 SEM 3/4X2.375	50	19.05	45	60.3	34.3	17
HSK E 63 SEM 3/4X2.375	63	19.05	45	60.3	34.3	17
HSK E 63 SEM 1 X2.375	63	25.4	52.8	60.3	34.3	17

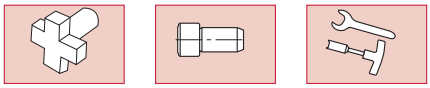

Lock Screw 150
Cooling Tube 151
Wrench 151

Tungaloy
Member IMC Group

HSK • Shell Mill Holder

HSK A-SEM

G2.5
15,000 min-1

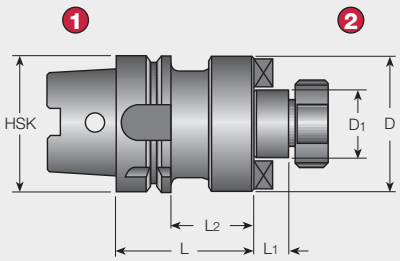

1 HSK DIN69893 Form A
2 ISO 3937

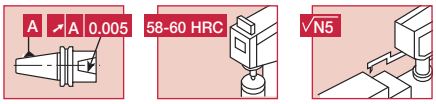

HSK A-SEM Shell Mill Holder - Metric

(Unit: mm)

Cat. No.	HSK-A	D_1	L	D	L_1	L_2
HSK A 40 SEM 22	40	22	47	50	19	30
HSK A 40 SEM 27	40	27	58	55	21	35
HSK A 50 SEM 16X 50	50	16	50	38	17	24
HSK A 50 SEM 22X 60	50	22	60	47	19	34
HSK A 50 SEM 27X 60	50	27	60	58	21	34
HSK A 63 SEM 16X 50	63	16	50	38	17	24
HSK A 63 SEM 22X 50	63	22	50	47	19	24
HSK A 63 SEM 27X 60	63	27	60	58	21	34
HSK A 63 SEM 32X 60	63	32	60	66	24	34
HSK A 63 SEM 40X 60	63	40	60	82	27	34
HSK A 100 SEM 22X 50 (1)	100	22	50	47	19	21
HSK A 100 SEM 27X 50 (1)	100	27	50	58	21	21
HSK A 100 SEM 32X 50 (1)	100	32	50	66	24	21
HSK A 100 SEM 40X 60 (1)	100	40	60	82	27	31
HSK A 100 SEM 50X 70 (1)	100	50	70	95	30	41

HSK A-SEM Shell Mill Holder - Inch

(Unit: mm)

Cat. No.	HSK-A	D_1	L	D	L_1	L_2
HSK A 50 SEM3/4 X2.375	50	19.05	60.3	45	17	34.3
HSK A 50 SEM1 X2.500	50	25.4	63.5	55.2	17	55.2
HSK A 50 SEM1-1/4X3.000	50	31.75	76.2	63.9	17	63.9
HSK A 63 SEM3/4 X2.375	63	19.05	60.3	45	17	34.3
HSK A 63 SEM1X1.750	63	25.4	44.5	53	17	18.4
HSK A 63 SEM1-1/4X2.375	63	31.75	60.3	63.8	17	34.3
HSK A 63 SEM1-1/2X2.375	63	38.1	60.3	78	23.9	34.3
HSK A 63 SEM2 X2.375	63	50.8	60.3	97.8	23.9	34.3
HSK A 100 SEM3/4X3.000	100	19.05	76.2	45	17	47.2
HSK A 100 SEM1X2.375	100	25.4	60.3	55	17	31.3
HSK A 100 SEM1-1/4X1.875	100	31.75	47.6	63.5	17	18.6
HSK A 100 SEM1-1/2X1.875	100	38.1	47.6	98.6	23.9	18.6
HSK A 100 SEM2 X2.375	100	50.8	60.3	98.6	23.9	31.3

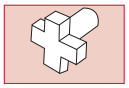
Lock Screw
150

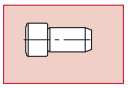
Cooling Tube
151

Wrench
151

HSK • Shell Mill Holder

A HSK FM-SEM

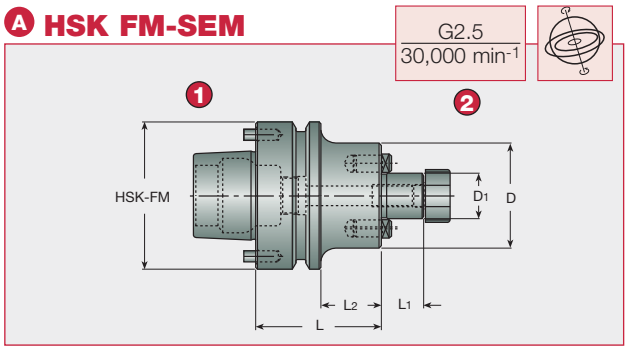

1 HSK DIN69893 Form FM (1)
2 ISO 3937

B HSK A-FM

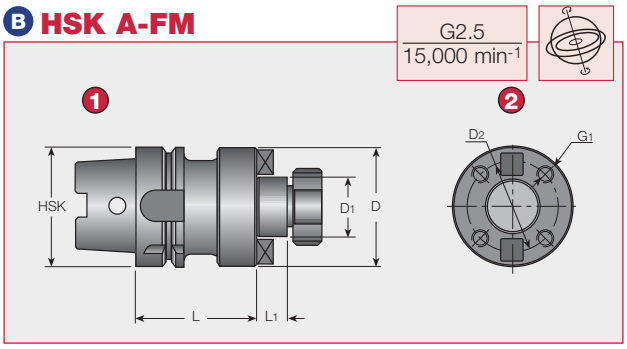

1 HSK DIN69893 Form A
2 DIN6353

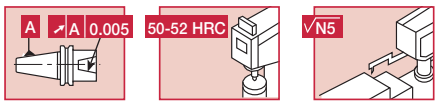

A HSK FM-SEM Shell Mill Holder - Metric

(Unit: mm)

Cat. No.	HSK-FM	D_1	L	D	L_1	L_2
HSK FM 63 SEM 22X 60	63	22	60	47	34	19
HSK FM 63 SEM 27X 60	63	27	60	58	34	21
HSK FM 63 SEM 32X 60	63	32	60	66	34	24

A HSK FM-SEM Shell Mill Holder - Inch

(Unit: mm)

Cat. No.	HSK-FM	D_1	L	D	L_1	L_2
HSK FM 63 SEM3/4 X3.00	63	19.05	76.2	45	17	50.2
HSK FM 63 SEM3/4 X4.50	63	19.05	114.3	45	17	88.3
HSK FM 63 SEM1 X2.375	63	25.4	60.3	52.8	17	34.3

Used for MAKINO'S machine models MAG3, MAG4 and V77.
These tools are based on the HSK63F type with two drive pins which improve torque transmission.

B HSK A-FM Face Mill Holder

(Unit: mm)

Cat. No.	HSK-A	D_1	L	D	L_1	D_2	G_1
HSK A 100 FM 60X70	100	60	70	128	40	101.6	M16

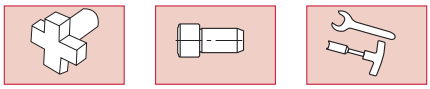

Lock Screw 150 | Cooling Tube 151 | Wrench 151

Tungaloy Member IMC Group

HSK • Shell Mill Holder / Morse Taper Holder

A HSK A-SEMC

G2.5
15,000 min-1

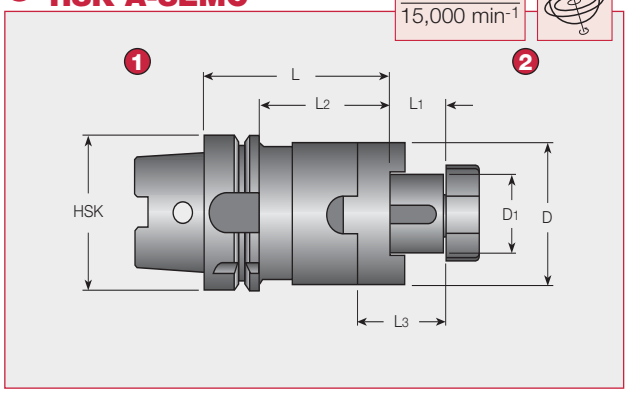

B HSK A-MT

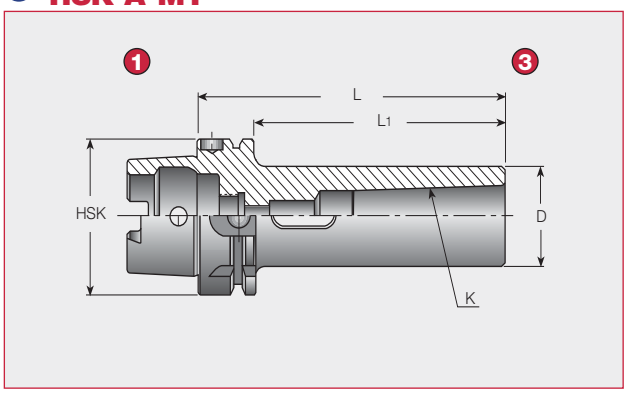

1. HSK DIN69893 Form A
2. DIN6358
3. DIN6383
   DIN228-2 Form D

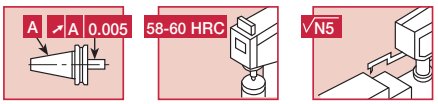

A HSK A-SEMC COMBI - Shell Mill Holder (Combination type)

(Unit: mm)

Cat. No.	HSK-A	D1	D	L	L1	L2	L3
HSK A 50 SEMC 16X50	50	16	32	50	17	24	27
HSK A 50 SEMC 22X50	50	22	40	50	19	24	31
HSK A 50 SEMC 27X65	50	27	48	65	21	39	33
HSK A 50 SEMC 32X65	50	32	58	65	24	39	38
HSK A 63 SEMC 16X60	63	16	32	60	17	34	21
HSK A 63 SEMC 22X60	63	22	40	60	19	34	31
HSK A 63 SEMC 27X60	63	27	48	60	21	34	33
HSK A 63 SEMC 32X60	63	32	58	60	24	34	38
HSK A 63 SEMC 40X70	63	40	70	70	27	44	41
HSK A 100 SEMC 16X60	100	16	32	60	17	31	27
HSK A 100 SEMC 22X60	100	22	40	60	19	31	31
HSK A 100 SEMC 27X60	100	27	48	60	21	31	33
HSK A 100 SEMC 32X60	100	32	58	60	24	31	38
HSK A 100 SEMC 40X70	100	40	70	70	27	41	41
HSK A 100 SEMC 50X80	100	50	90	80	30	51	46

B HSK A-MT Morse Taper Holder

(Unit: mm)

Cat. No.	HSK-A	K	D	L	L1
HSK A 50 MT1X100	50	MT1	25	100	74
HSK A 50 MT2X120	50	MT2	32	120	94
HSK A 50 MT3X140	50	MT3	40	140	114
HSK A 63 MT1X110	63	MT1	25	110	84
HSK A 63 MT2X120	63	MT2	32	120	94
HSK A 63 MT3X140	63	MT3	40	140	114
HSK A 63 MT4X160	63	MT4	48	160	134
HSK A 100 MT1X110	100	MT1	25	110	81
HSK A 100 MT2X120	100	MT2	32	120	91
HSK A 100 MT3X150	100	MT3	40	150	121
HSK A 100 MT4X170	100	MT4	48	170	141
HSK A 100 MT5X200	100	MT5	63	200	171

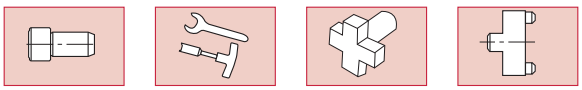

Cooling Tube 151
Wrench 151
Lock Screw 150
Driving Ring 151

HSK • Center Alignment and Cylindical

ADJ HSK A-ER

G6.3
12,000 min^{-1}

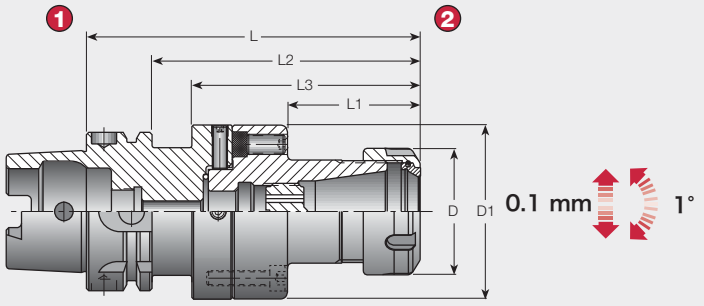

1 **HSK DIN69893 Form A**
2 **DIN6499**

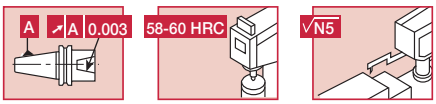

ADJ HSK A-ER ER Collet Chuck with Center Alignment

(Unit: mm)

Cat. No.	Range	L	L_1	L_2	L_3	D	D_1	D_2
ADJ HSK A 63 D70 ER32	2-20	134.5	52.5	108.5	82.5	50	70	46
ADJ HSK A 100 D70 ER32	2-20	129.5	52.5	100.5	-	50	70	-

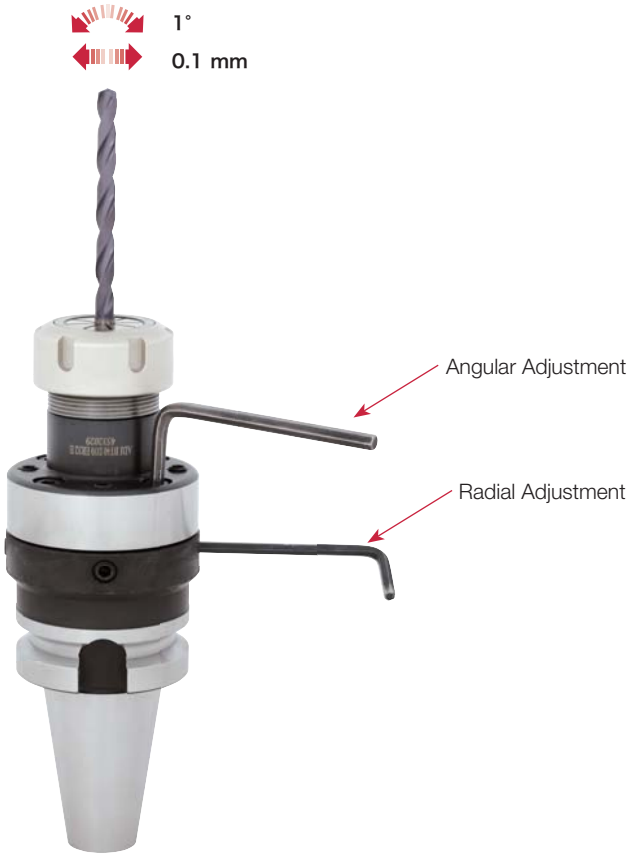

ER Collet 116 - 119
Nut 147
Preset Screw 149
Wrench 151
Cooling Tube 151
User Guide 113 - 115

BORE HSK A-EM

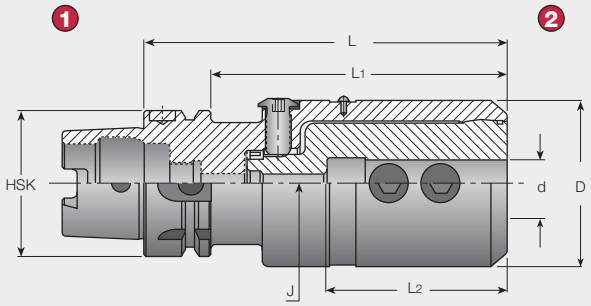

1 **HSK DIN69893 Form A**
2 **ISO 9766**

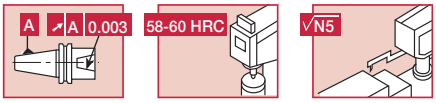

BORE HSK A Adjustable Drilling Diameter Holder

(Unit: mm)

Cat. No.	HSK-A	d	D	L	L_1	L_2	J
FITBORE HSK A 63 EM25	63	25	72	142	116	71	M10
FITBORE HSK A 63 EM32	63	32	72	142	116	71	M10
FITBORE HSK A 63 EM40	63	40	72	142	116	71	M10

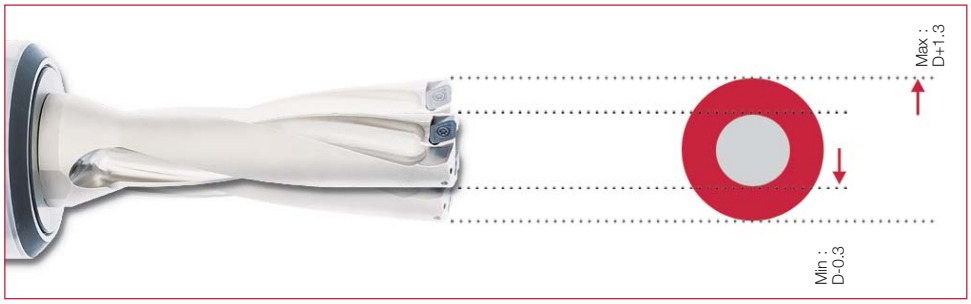

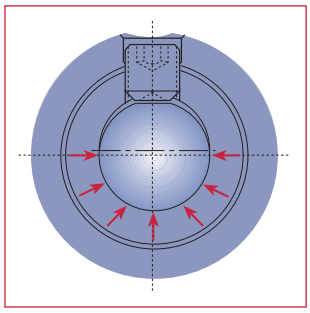

The bore's section is actually made from two shifted circular sections. The clamping screw pushes the drill shank through a narrowed opening, forcing elastic deformation of the holder. Contact is made around more than 180°, providing a high clamping force.

Lock Screw 150
Preset Screw 150
Wrench 151
Cooling Tube 151
User Guide 7

HSK • TUNGCLICK • Quick Change Holder

HSK A-ER-CLICK

G2.5
20,000 min^{-1}

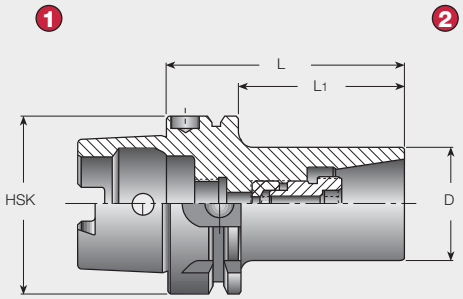

1 **HSK DIN69893 Form A**
2 **DIN6499 ER-CLICK**

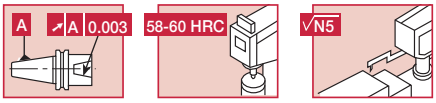

HSK A-ER CLICK Quick Change System

(Unit: mm)

Cat. No.	L	L1	D
HSK A 63 ER32 CLICK-IN	85	59	41
HSK A 100 ER32 CLICK-IN	90	61	41

⚠ Tightening torque: 235 N·m

HSK • TUNGFIT • Modular System

HSK A-CF

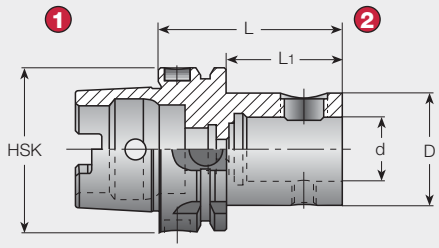

1 **DIN69893 Form A**
2 **TungFit**

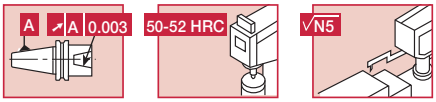

HSK A-CF Modular System

(Unit: mm)

Cat. No.	HSK-A	L	L1	D	d
HSK A 63 CF4-S	63	70	44	44.5	CF4
HSK A 80 CF4-S	80	73	47	44.5	CF4
HSK A 100 CF4-S	100	76	47	44.5	CF4

⚠ Tightening torque: 58.8 N·m

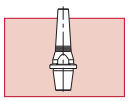
TungClick
140

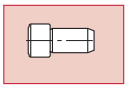
Cooling Tube
151

Wrench
151

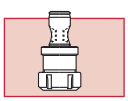
TungFit
112

User Guide
7

HSK • TUNGFLEX • Indexable Modular System

A HSK A-ODP

G2.5
20,000 min-1

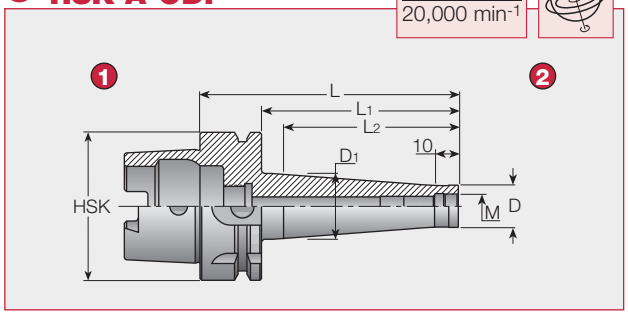

B HSK E-ODP

G2.5
40,000 min-1

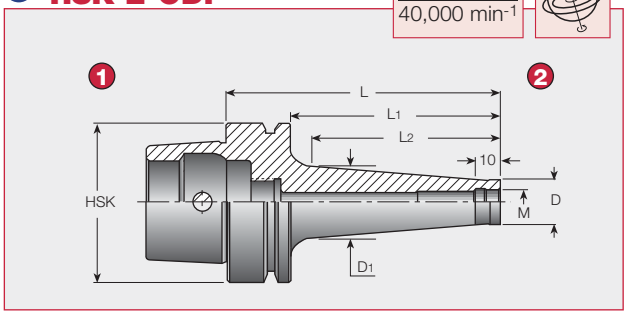

1 HSK DIN69893 Form A
2 TungFlex

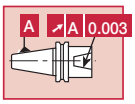

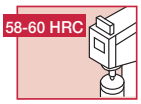

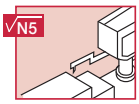

1 HSK DIN69893 Form E
2 TungFlex

A HSK A-ODP Indexable Modular System

(Unit: mm)

Cat. No.	HSK-A	M	D	D1	L	L1	L2
HSK A 63 ODP 6X 59	63	M6	9.7	10.0	59	33	25
HSK A 63 ODP 6X109	63	M6	9.8	23.0	109	83	75
HSK A 63 ODP 8X 59	63	M8	13.1	15.0	59	33	25
HSK A 63 ODP 8X109	63	M8	13.1	23.0	109	83	75
HSK A 63 ODP10X 59	63	M10	18.0	20.0	59	33	25
HSK A 63 ODP10X109	63	M10	18.0	28.0	109	83	75
HSK A 63 ODP12X 59	63	M12	21.0	24.0	59	33	25
HSK A 63 ODP12X109	63	M12	21.0	31.0	109	83	75
HSK A 63 ODP16X 59	63	M16	29.0	34.0	59	33	25
HSK A 63 ODP16X109	63	M16	29.0	34.0	109	83	75
HSK A 100 ODP 12X 87 (1)	100	M12	23.0	30.0	87	58	50
HSK A 100 ODP 12X 137 (1)	100	M12	23.0	30.0	137	108	100
HSK A 100 ODP 12X 187 (1)	100	M12	23.0	40.0	187	158	150
HSK A 100 ODP 12X 237 (1)	100	M12	23.0	46.0	237	208	200
HSK A 100 ODP 16X 87 (1)	100	M12	29.0	31.5	87	58	50
HSK A 100 ODP 16X 137 (1)	100	M12	29.0	41.5	137	108	100
HSK A 100 ODP 16X 187 (1)	100	M12	29.0	55.0	187	158	150
HSK A 100 ODP 16X 237 (1)	100	M12	29.0	55.0	237	208	200

(1) Balanced to G6.5 12,000 min-1

B HSK E-ODP Indexable Modular System

(Unit: mm)

Cat. No.	HSK-E	M	D	D1	L	L1	L2
HSK E 40 ODP 10X53	40	M10	18	20	53	33	25
HSK E 40 ODP 10X103	40	M10	18	28	103	83	75
HSK E 40 ODP 12X53	40	M12	21	24	53	33	25
HSK E 40 ODP 12X103	40	M12	21	31	103	83	75
HSK E 50 ODP 10X59 (1)	50	M10	18	20	59	33	25
HSK E 50 ODP 10X109 (1)	50	M10	18	28	109	83	75
HSK E 50 ODP 12X59 (1)	50	M12	21	24	59	33	25
HSK E 50 ODP 12X109 (1)	50	M12	21	31	109	83	75
HSK E 50 ODP 16X 59 (1)	50	M16	29	34	59	33	25
HSK E 50 ODP 16X109 (1)	50	M16	29	34	109	83	75
HSK E 63 ODP 10X59 (2)	63	M10	18	20	59	33	25
HSK E 63 ODP 10X109 (2)	63	M10	18	28	109	83	75
HSK E 63 ODP 12X59 (2)	63	M12	21	24	59	33	25
HSK E 63 ODP 12X109 (2)	63	M12	21	31	109	83	75
HSK E 63 ODP 16X59 (2)	63	M16	29	34	59	33	25
HSK E 63 ODP 16X109 (2)	63	M16	29	34	109	83	75

(1) Balanced to G2.5 35,000 min-1
(2) Balanced to G2.5 30,000 min-1

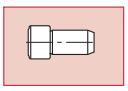

Cooling Tube
151

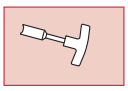

Wrench
151

User Guide
7

HSK • Blanks

HSK A-B-MN

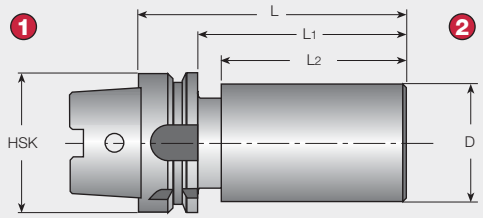

1 **HSK DIN69893 Form A**
2 **BLANKS**

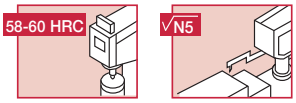

HSK A-B-MN Blanks

(Unit: mm)

Cat. No.	HSK-A	D	D_1	L	L_1	L_2
HSK A 50 B16MN 100	50	53	41.8	100	74	58.0
HSK A 50 B16MN 200	50	53	41.8	200	174	158.0
HSK A 63 B16MN 100	63	63	52.8	100	74	55.5
HSK A 63 B16MN 200	63	63	52.8	200	174	155.5
HSK A 100 B16MN 100	100	102	85.0	100	71	54.8
HSK A 100 B16MN 200	100	102	85.0	200	171	154.8

Material: Case hardened alloy steel.
Shank hardness 58 HRc minimum.
Nose hardness 35-37 HRc.

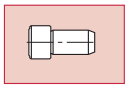

Cooling Tube

151

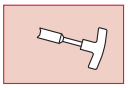

Wrench

151

Tungaloy
Member IMC Group

BT MAS 403 • Shank Standaed

BT MAS 403 Form A/B

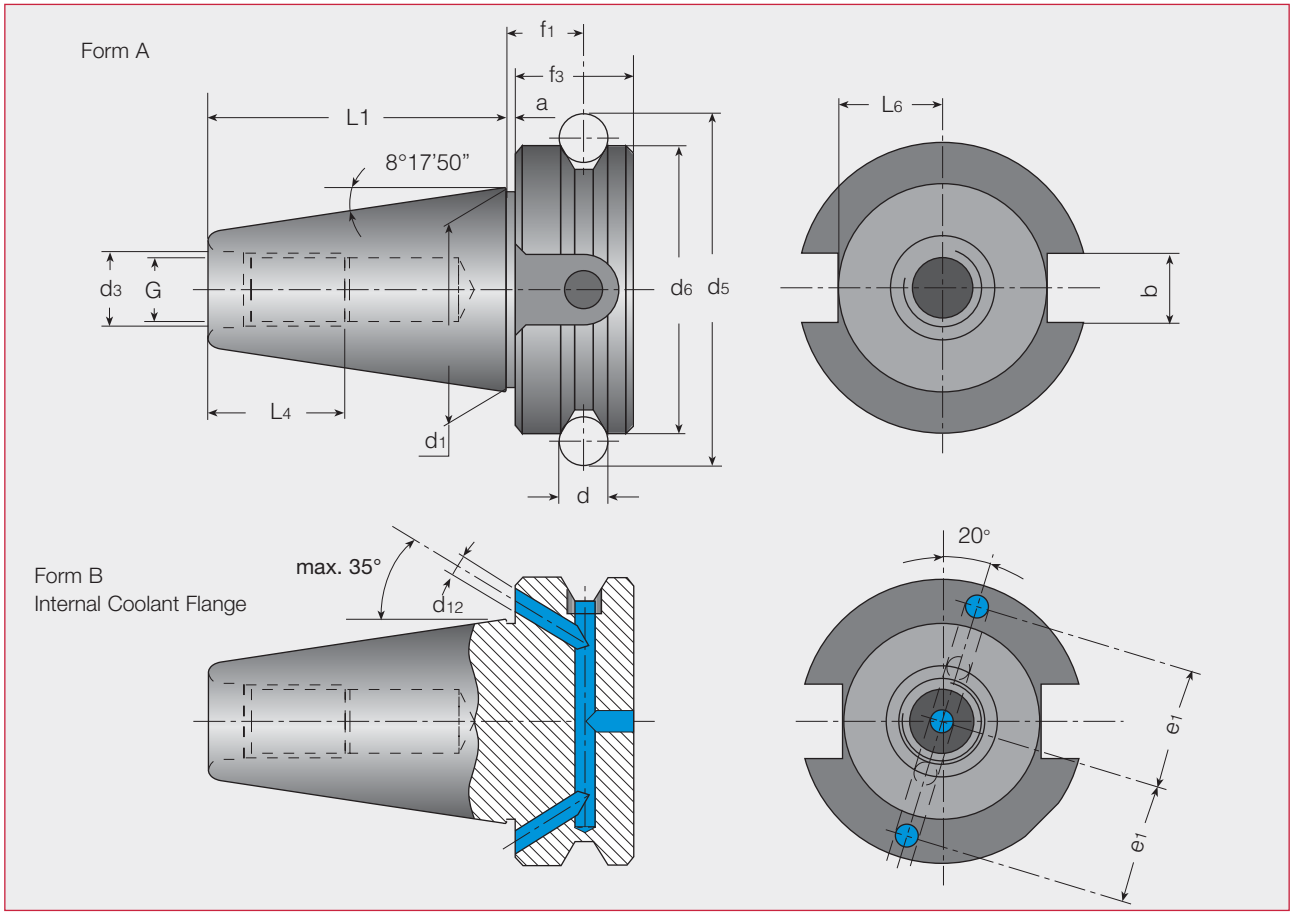

(Unit: mm)

Shank	a	b (H12)	d	d1	G	d3 (H8)	d5	d6 (H8)	f1 ±0.1
BT 30	2	16.1	8	31.75	M12	12.5	56.144	46	13.6
BT 40	2	16.1	10	44.45	M16	17.0	75.679	63	16.6
BT 50	3	25.7	15	69.85	M24	25.0	119.020	100	23.2

(Unit: mm)

Shank	f3	L1 ±0.2	L4 min	L6-0.2	e1 ±0.1	d12	TAPER AT3
BT 30	20	48.4	24	16.3	21	4	0.002
BT 40	25	65.4	30	22.6	27	4	0.003
BT 50	35	101.8	45	35.4	42	6	0.004

BT MAS 403 • Collet Chuck Holder

BT-ER16/20

G2.5
20,000 min-1

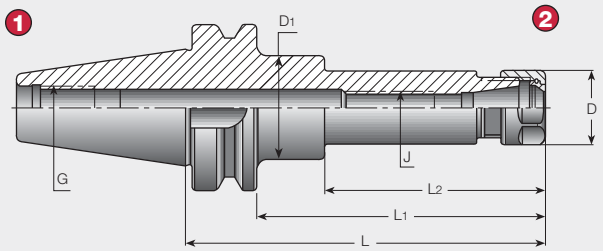

1 **BT MAS 403 Form A/B**
2 **DIN6499**

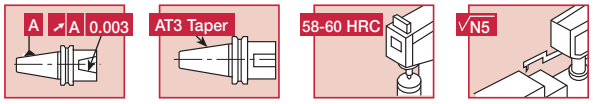

BT-ER16/20 ER Collet Chuck Holder

(Unit: mm)

Cat. No.	Range	L	L_1	L_2	D	D_1	J	G
BT30 ER16X 70 (1)	0.5-10	70	48	-	28	-	M10	M12
BT30 ER20X 70 (1)	1-13	70	48	-	34	-	M12	M12
BT40 ER11X100 MINI (2)	0.5-7	100	73	-	16	-	M6	M16
BT40 ER16X 70	0.5-10	70	43	-	28	-	M12	M16
BT40 ER16X100	0.5-10	100	73	-	28	-	M12	M16
BT40 ER16X150	0.5-10	150	123	110	28	40	M12	M16
BT40 ER16X200	0.5-10	200	173	85	28	40	M10	M16
BT40 ER20X 70	1-13	70	43	-	34	-	M12	M16
BT40 ER20X100	1-13	100	73	-	34	-	M12	M16
BT40 ER20X120	1-13	120	93	-	34	-	M12	M16
BT40 ER20X150	1-13	150	123	-	34	-	M12	M16
BT50 ER16X100 (1)	0.5-10	100	62	-	28	-	M12	M24
BT50 ER16X125 (1)	0.5-10	125	87	-	28	-	M12	M24
BT50 ER16X150 (1)	0.5-10	150	112	-	28	-	M12	M24
BT50 ER16X200 (1)	0.5-10	200	162	85	28	40	M10	M24
BT50 ER20X100 (1)	1-13	100	62	-	34	-	M12	M24
BT50 ER20X125 (1)	1-13	125	87	-	34	-	M12	M24
BT50 ER20X150 (1)	1-13	150	112	-	34	-	M12	M24
BT50 ER20X200 (1)	1-13	200	162	85	34	50	M12	M24

Add B for coolant through the flange.
(1) Balanced to G6.3 at 12,000 min-1
(2) ER16 MINI Collet Chuck Spec.

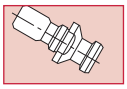
Pull Stud
144

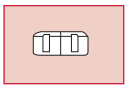
Nut
147

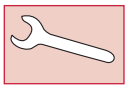
Wrench
148

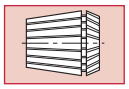
Wrench
116 - 119

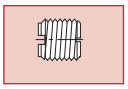
Preset Screw
149

User Guide
113 - 115

BT MAS 403 • Collet Chuck Holder • TUNGSHORT

A BT-ER

G2.5
20,000 min-1

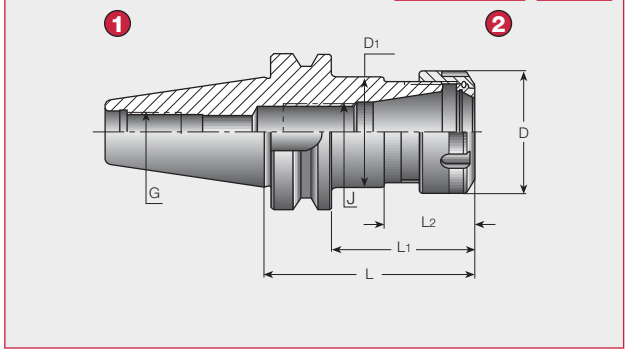

B BT-ER-SHORT

G2.5
20,000 min-1

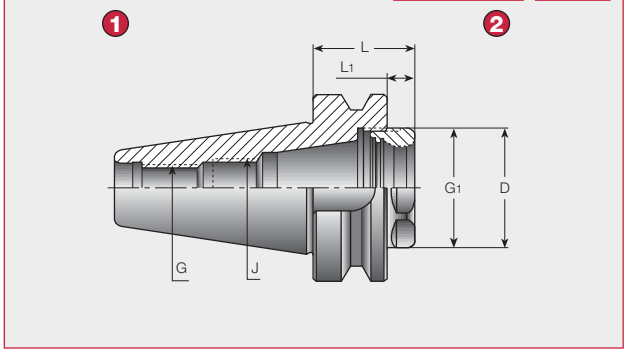

1 BT MAS 403 Form A/B
2 DIN6499

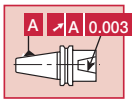

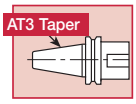

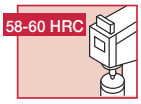

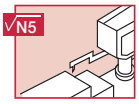

1 BT MAS 403 Form A/B
2 DIN6499 ER-SHORT

A BT-ER ER Collet Chuck Holder

(Unit: mm)

Cat. No.	Range	L	L_1	L_2	D	D_1	J	G
BT30 ER25X 60 (1)	1-16	60	38	-	42	-	M16	M12
BT30 ER32X 60 (1)	2-20	60	38	-	50	-	M18x1.5	M12
BT40 ER25X 60	1-16	60	33	-	42	-	M16	M16
BT40 ER25X100	1-16	100	73	-	42	-	M16	M16
BT40 ER25X150	1-16	150	123	-	42	-	M16	M16
BT40 ER32X 60	2-20	60	33	-	50	-	M22X1.5	M16
BT40 ER32X100	2-20	100	73	-	50	-	M22X1.5	M16
BT40 ER32X120	2-20	120	93	-	50	-	M22X1.5	M16
BT40 ER32X150	2-20	150	123	-	50	-	M22X1.5	M16
BT40 ER40X 80	3-26	80	53	-	63	-	M28X1.5	M16
BT40 ER40X100	3-26	100	73	-	63	-	M28X1.5	M16
BT40 ER40X150	3-26	150	123	-	63	-	M28X1.5	M16
BT40 ER50X 90	10-34	90	63	-	78	-	M28X1.5	M16
BT50 ER25X100 (1)	1-16	100	62	-	42	-	M16	M24
BT50 ER25X150 (1)	1-16	150	112	-	42	-	M16	M24
BT50 ER25X200 (1)	1-16	200	162	87	42	55	M16	M24
BT50 ER32X100 (1)	2-20	100	62	-	50	-	M22X1.5	M24
BT50 ER32X125 (1)	2-20	125	87	-	34	-	M22X1.5	M24
BT50 ER32X150 (1)	2-20	150	112	-	50	-	M22X1.5	M24
BT50 ER32X200 (1)	2-20	200	162	88	50	63	M22X1.5	M24
BT50 ER40X100 (1)	3-26	100	62	-	63	-	M28X1.5	M24
BT50 ER40X150 (1)	3-26	150	112	-	63	-	M28X1.5	M24
BT50 ER40X200 (1)	3-26	200	162	-	63	-	M28X1.5	M24
BT50 ER50X100 (1)	10-34	100	62	-	78	-	M36X1.5	M24
BT50 ER50X150 (1)	10-34	150	112	-	78	-	M36X1.5	M24

Add B for coolant through the flange.

(1) Balanced to G6.3 at 12,000 min-1

B BT-ER-SHORT Short ER Collet Chuck Holder

(Unit: mm)

Cat. No.	Range	L	L_1	D	J	G	G_1
BT30 ER20 SHORT	1-13	27.2	5.2	25	M12	M12	M25x1.5
BT40 ER32 SHORT	2-20	36.5	9.5	40	M12	M16	M40x1.5
BT40 ER40 SHORT	3-26	46.5	9.5	50	M16	M16	M50x1.5
BT50 ER32 SHORT	2-20	47.5	9.5	40	M22x1.5	M24	M40x1.5
BT50 ER40 SHORT	3-26	47.5	9.5	50	M28x1.5	M24	M50x1.5

Add B for coolant through the flange.

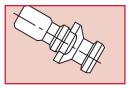
Pull Stud
144

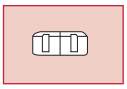
Nut
147

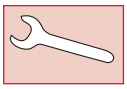
Wrench
148

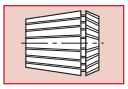
ER Collet
116 - 119

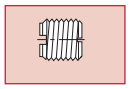
Preset Screw
149

User Guide
113 -115

BT MAS 403 • TUNGBALANCE • Balanceable Collet Chuck Holder

BT-ER-BALANCE

(1) G2.5
20,000 min-1

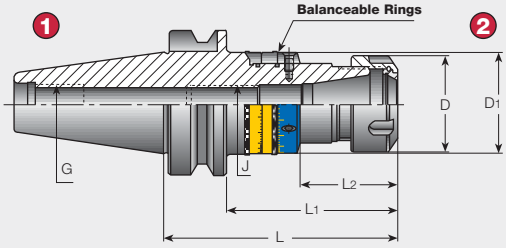

1 BT MAS 403 Form A
2 DIN6499 ER-BALANCE

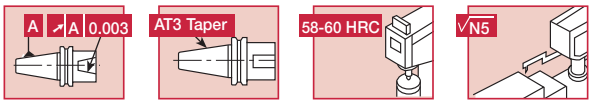

BT-ER-BALANCE Balanceable ER Collet Chuck Holder

(Unit: mm)

Cat. No.	Range	L	L1	L2	D	D1	G	J
BT40 ER16X100 BIN	0.5-10	100	73	44.0	28	44	M16	M10
BT40 ER16X150 BIN	0.5-10	150	123	78.7	28	44	M16	M10
BT40 ER20X100 BIN	1.0-13	100	73	44.6	34	44	M16	M12
BT40 ER20X150 BIN	1.0-13	150	123	79.6	34	4	M16	M12
BT40 ER25X100 BIN	1.0-16	100	73	43.0	42	44	M16	M16
BT40 ER25X150 BIN	1.0-16	150	123	79.0	42	44	M16	M16
BT40 ER32X100 BIN	2.0-20	100	73	44.0	50	60	M16	M22x1.5
BT40 ER32X150 BIN	2.0-20	150	123	94.0	50	60	M16	M22x1.5
BT40 ER40X100 BIN	3.0-26	100	73	44.0	63	60	M16	M28x1.5

(1) Blanced to G2.5 20,000 min-1

TUNGMAX • Endmill Chuck Holder

BT-MAX

G6.3
10,000 min-1

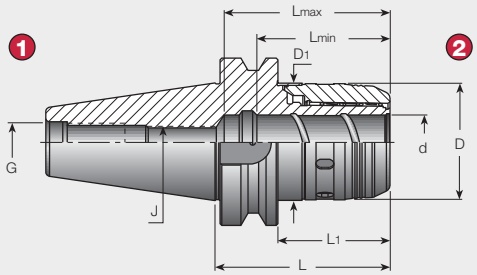

1 BT MAS 403 Form A/B
2 TungMax

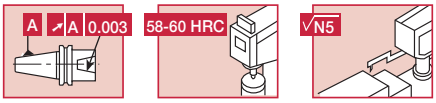

BT-MAX Power Chuck Holder

(Unit: mm)

Cat. No.	Range	d	D	D1	L	L1	Lmin	Lmax	J	G
BT40 MAXIN 20x85	6-20	20	51	53	85	58	56	68	M16	M16
BT40 MAXIN 32x108	6-32	32	69	70	108	81	70	83	M16	M16
BT50 MAXIN 20x105 (1)	6-20	20	51	53	105	67	56	69	M16	M24
BT50 MAXIN 32x106 (1)	6-32	32	69	70	106	68	69	83	M20x2	M24
BT50 MAXIN 32x135 (1)	6-32	32	69	70	135	97	69	84	M20x2	M24

Add B for coolant through the flange.

(1) Balanced to G6.3 at 8,000 min-1

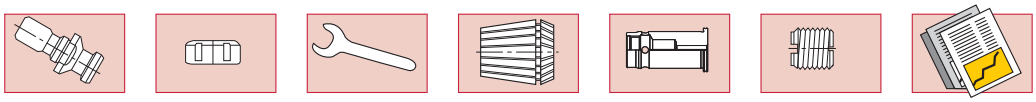

Pull Stud 144
Nut 147
Wrench 148
ER Collet 116 - 119
SC Collet 122
Preset Screw 149
User Guide 113 - 115, 6, 9

BT-MAX-BALANCE

G6.3
10,000 min-1

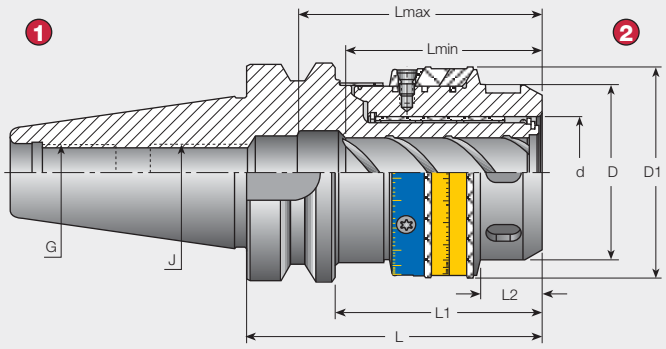

1. **BT MAS 403 Form A**
2. **TungBalance**

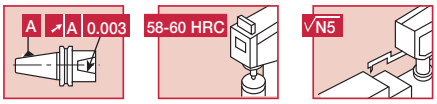

BT-MAX-BALANCE Balanceable Power Chuck Holder

(Unit: mm)

Cat. No.	Range	d	D	D	L	L_1	L_2	Lmin	Lmax	J	G
BT40 MAXIN 20x85 BIN (1)	6-20	20	51	61	85	58	18	56	68	M16	M16
BT40 MAXIN 32x108 BIN (1)	6-32	32	69	80	108	81	25	70	83	M16	M16
BT50 MAXIN 20x105 BIN (2)	6-20	20	51	61	105	67	18	56	69	M16	M24
BT50 MAXIN 32x106 BIN (2)	6-32	32	69	80	106	68	25	69	83	M20x2	M24

(1) Chucks with taper size 40 can be balanced by the balancing ring up to G2.5 at 20,000 min^{-1}
(2) Chucks with taper size 50 can be balanced by the balancing ring up to G2.5 at 18,000 min^{-1}

SC Collet 122
Pull Stud 144
User Guide 6, 9

BT MAS 403 • TUNGHYDRO • Hydraulic Chuck Holder

BT-HYDRO

G6.3
BT 30, 40 = 12,000 min^{-1}
BT 50 = 8,000 min^{-1}

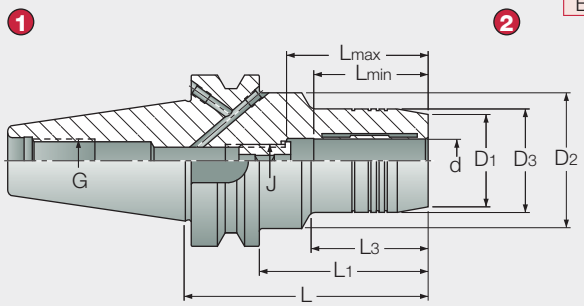

1 **BT MAS 403 Form A/B**
2 **TungHydro**

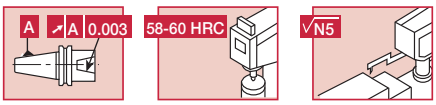

BT-HYDRO Hydraulic Chuck Holder

(Unit: mm)

Cat. No.	d	D_1	D_3	D_2	L	L_1	L_3	Lmin	Lmax	J	G
BT 30 HYDRO 6X 60	6	23	26	50	60	38	43	27	37	M5	M12
BT 30 HYDRO 8X 64	8	25	28	50	64	42	43.5	27	37	M6	
BT 30 HYDRO 10X 64	10	27	30	50	64	42	44	32	42	M8x1	
BT 30 HYDRO 12X 72	12	29	32	50	72	50	44.5	37	47	M10x1	
BT 30 HYDRO 14X 70	14	30	34	50	70	48	47.5	37	47	M10x1	
BT 30 HYDRO 16X 90	16	34	38	50	90	68	47.5	42	52	M12x1	
BT 30 HYDRO 18X 90	18	36	40	50	90	68	47.5	42	52	M12x1	
BT 30 HYDRO 20X 90	20	38	42	50	90	68	47.5	42	52	M12x1	
BT 40 HYDRO 6X 90	6	23	26	50	90	63	43	27	37	M5	M16
BT 40 HYDRO 8X 90	8	25	28	50	90	63	43.5	27	37	M6	
BT 40 HYDRO 10X 90	10	27	30	50	90	63	44	32	42	M8x1	
BT 40 HYDRO 12X 90	12	29	32	50	90	63	44.5	37	47	M10x1	
BT 40 HYDRO 14X 90	14	30	34	50	90	63	47.5	37	47	M10x1	
BT 40 HYDRO 16X 90	16	34	38	50	90	63	47.5	42	52	M12x1	
BT 40 HYDRO 18X 90	18	36	40	50	90	63	47.5	42	52	M12x1	
BT 40 HYDRO 20X 90	20	38	42	50	90	63	47.5	42	52	M12x1	
BT 40 HYDRO 25X 90	25	46	50	63	90	51	51	48	58	M12x1	
BT 40 HYDRO 32X110	32	56	60	60	110	81.5	81.5	52	62	M16x1	
BT 50 HYDRO 6X110	6	23	26	80	110	72	43	27	37	M5	M24
BT 50 HYDRO 8X110	8	25	28	80	110	72	43.5	27	37	M6	
BT 50 HYDRO 10X110	10	27	30	80	110	72	44	32	42	M8x1	
BT 50 HYDRO 12X110	12	29	32	80	110	72	42	37	47	M10x1	
BT 50 HYDRO 14X110	14	30	34	80	110	72	42	37	47	M10x1	
BT 50 HYDRO 16X110	16	34	38	80	110	72	45	42	52	M12x1	
BT 50 HYDRO 18X110	18	36	40	80	110	72	45	42	52	M12x1	
BT 50 HYDRO 20X110	20	38	42	80	110	72	47.5	42	52	M12x1	
BT 50 HYDRO 25X110	25	46	50	80	110	72	47.5	48	58	M12x1	
BT 50 HYDRO 32X110	32	56	60	80	110	72	47.5	54	64	M12x1	

Clamping wrench (wrench HYDRO HEX 4) should be ordered separately.
Note: Available are reduction sleeves for 12, 20, 25 and 32 mm bore diameters.
Chucking forces will significantly reduce if reduction sleeves are used (ordered separately).

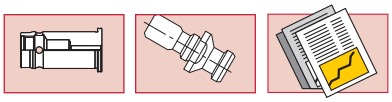

SC Collet 122
Pull Stud 144
User Guide 6, 127 - 129

BT MAS 403 • TUNGHYDRO • Hydraulic Chuck Holder

BT-HYDRO

G6.3
BT 40 = 12,000 min^{-1}
BT 50 = 8,000 min^{-1}

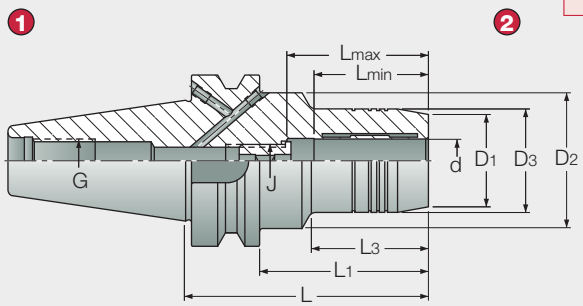

1 **BT MAS 403 Form A/B**
2 **TungHydro**

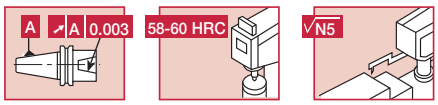

BT-HYDRO Short Hydraulic Chuck Holder (Heavy Duty)

(Unit: mm)

Cat. No.	d	D_1	D_3	L	L_1	Lmin	Lmax	J	G
BT 40 HYDRO 20X 72.5	20	40	49.5	72.5	45.5	52	62	M16x1	M16
BT 50 HYDRO 32X 90	32	56	72	90	52	65	75	M16x1	M24

Clamping wrench (wrench HYDRO HEX 4) should be ordered separately.
Note: Available are reduction sleeves for 12, 20, 25 and 32 mm bore diameters.
Chucking forces will significantly reduce if reduction sleeves are used (ordered separately).

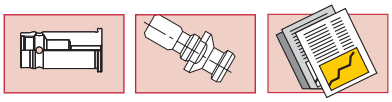

SC Collet 122
Pull Stud 144
User Guide 6, 127 - 129

BT MAS 403 • Side Lock Endmill Chuck Holder

A BT-EM

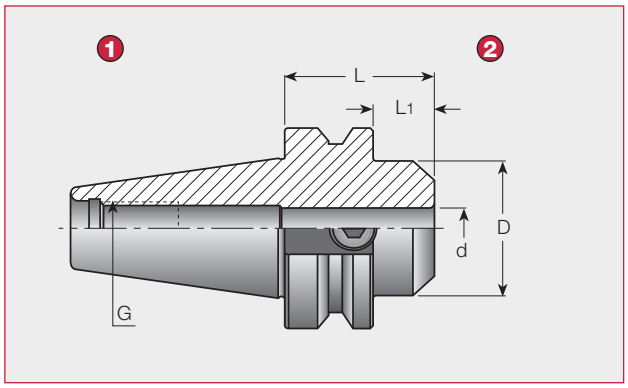

B BT-EM-C

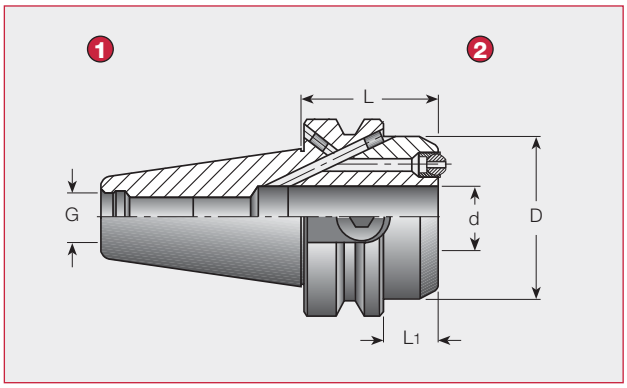

1 **BT MAS 403 Form A/B**
2 **DIN6359**
DIN1835 Form B (Weldon type)

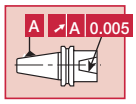

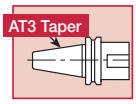

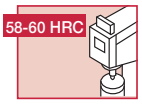

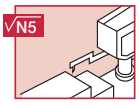

A BT-EM Short Endmill Holder (Weldon type)

(Unit: mm)

Cat. No.	d	L	L1	D	G
BT40 EM 10X 45	10	45	18	35	M16
BT40 EM 12X 45	12	45	18	42	M16
BT40 EM 14X 45	14	45	18	44	M16
BT40 EM 16X 45	16	45	18	48	M16
BT40 EM 18X 45	18	45	18	50	M16
BT40 EM 20X 45	20	45	18	52	M16
BT40 EM 25X 45	25	45	-	63	M16

Add B for coolant through the flange.

B BT-EM-C Short Endmill Chuck Holder with Adjustable Nozzle (Weldon type)

(Unit: mm)

Cat. No.	d	L	L1	D	G
BT40 EM 6X 50 C	6	50	23	32	M16
BT40 EM 8X 50 C	8	50	23	28	M16
BT40 EM 10X 45 C	10	45	18	35	M16
BT40 EM 12X 45 C	12	45	18	42	M16
BT40 EM 16X 45 C	16	45	18	48	M16
BT40 EM 20X 45 C	20	45	18	52	M16
BT40 EM 25X 45 C	25	45	-	63	M16

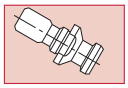

Pull Stud

144

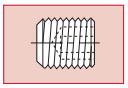

Lock Screw

150

Tungaloy
Member IMC Group

BT MAS 403 • Side Lock Endmill Chuck Holder

BT-EM

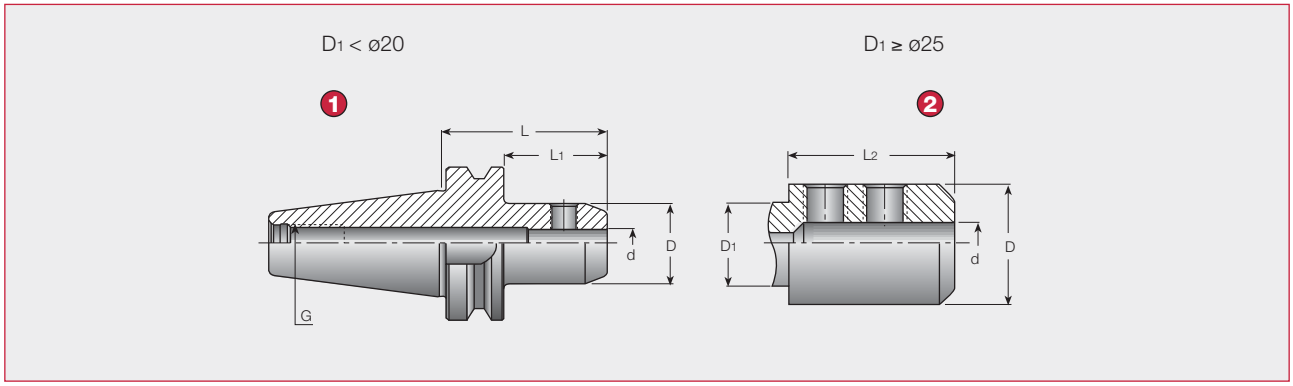

1 **BT MAS 403 Form A/B**
2 **DIN6359**
DIN1835 Form B (Weldon type)

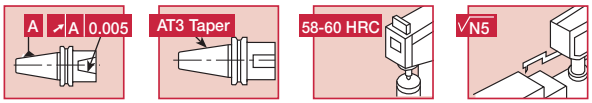

BT-EM Endmill Chuck Holder (Weldon type)

(Unit: mm)

Cat. No.	d	D	D_1	L	L_1	L_2	G
BT30 EM 6X 50	6	25	-	50	28	-	M12
BT30 EM 8X 60	8	28	-	60	38	-	M12
BT30 EM 10X 60	10	35	-	60	38	-	M12
BT30 EM 12X 60	12	42	-	60	38	-	M12
BT30 EM 14X 60	14	44	-	60	38	-	M12
BT30 EM 16X 60	16	48	44.4	60	38	37	M12
BT30 EM 18X 60	18	50	44.4	60	38	28	M12
BT30 EM 20X 80	20	52	44.4	80	53	43	M12
BT40 EM 6X 50	6	25	-	50	23	-	M16
BT40 EM 8X 50	8	28	-	50	23	-	M16
BT40 EM 10X 65	10	35	-	65	38	-	M16
BT40 EM 12X 65	12	42	-	65	38	-	M16
BT40 EM 14X 65	14	44	-	65	38	-	M16
BT40 EM 16X 65	16	48	-	65	38	-	M16
BT40 EM 18X 65	18	50	-	65	38	-	M16
BT40 EM 20X 75	20	52	-	75	48	-	M16
BT40 EM 25X105	25	65	61.0	105	78	68	M16
BT40 EM 32X110	32	71	61.0	110	83	73	M16
BT50 EM 6X 70	6	25	-	70	32	-	M24
BT50 EM 8X 70	8	28	-	70	32	-	M24
BT50 EM 10X 70	10	35	-	70	32	-	M24
BT50 EM 12X100	12	42	-	100	62	-	M24
BT50 EM 14X100	14	44	-	100	62	-	M24
BT50 EM 16X100	16	48	-	100	62	-	M24
BT50 EM 18X100	18	50	-	100	62	-	M24
BT50 EM 20X100	20	52	-	100	62	-	M24
BT50 EM 25X115	25	65	-	115	77	-	M24
BT50 EM 32X115	32	72	-	115	77	-	M24
BT50 EM 40X115	40	90	-	115	77	-	M24
BT50 EM 50X125	50	98	-	125	87	-	M24

Add B for coolant through the flange.

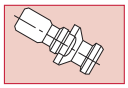

Pull Stud

144

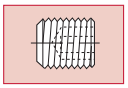

Lock Screw

150

BT MAS 403 • Side Lock Endmill Chuck Holder

BT-EM-E

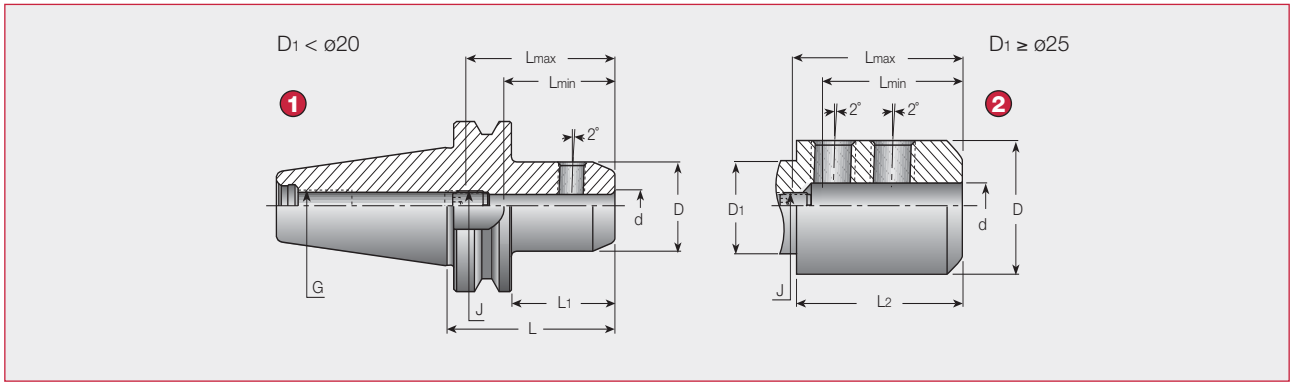

1 **BT MAS 403 Form A/B**
2 **DIN6359**
DIN1835 Form E (whistle notch type)

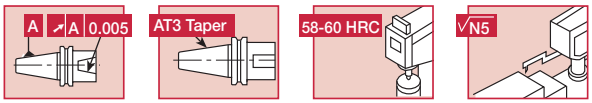

BT-EM-E Endmill Chuck Holder (whistle notch type)

(Unit: mm)

Cat. No.	d	D	D1	L	L1	L2	Lmin	Lmax	J (1)	G	Hex Key
BT40 EM 6X 50 E	6	25	-	50	23	-	35	45	M5	M16	2.5
BT40 EM 8X 50 E	8	28	-	50	23	-	35	45	M6	M16	3
BT40 EM 10X 65 E	10	35	-	65	38	-	39	49	M8	M16	4
BT40 EM 12X 65 E	12	42	-	65	38	-	44	54	M10	M16	5
BT40 EM 14X 65 E	14	44	-	65	38	-	44	54	M10	M16	5
BT40 EM 16X 65 E	16	48	-	65	38	-	47	57	M12	M16	6
BT40 EM 18X 65 E	18	50	-	65	38	-	47	57	M12	M16	6
BT40 EM 20X 75 E	20	52	-	75	48	-	49	59	M16	M16	8
BT40 EM 25X105 E	25	65	61	105	78	68	54	64	M20X1.5	M16	10
BT40 EM 32X110 E	32	71	61	110	83	73	58	68	M20X1.5	M16	10
BT50 EM 6X 70 E	6	25	-	70	32	-	35	45	M5	M24	2.5
BT50 EM 8X 70 E	8	28	-	70	32	-	35	45	M6	M24	3
BT50 EM 10X 70 E	10	35	-	70	32	-	39	49	M8	M24	4
BT50 EM 12X100 E	12	42	-	100	62	-	44	54	M10	M24	5
BT50 EM 14X100 E	14	44	-	100	62	-	44	54	M10	M24	5
BT50 EM 16X100 E	16	48	-	100	62	-	47	57	M12	M24	6
BT50 EM 18X100 E	18	50	-	100	62	-	47	57	M12	M24	6
BT50 EM 20X100 E	20	52	-	100	62	-	49	59	M16	M24	8
BT50 EM 25X115 E	25	65	-	115	77	-	54	64	M20X1.5	M24	10
BT50 EM 32X115 E	32	72	-	115	77	-	58	68	M20X1.5	M24	10
BT50 EM 40X115 E	40	90	-	115	77	-	68	78	M20X1.5	M24	10
BT50 EM 50X125 E	50	98	-	125	67	-	78	88	M20X1.5	M24	10

Add B for coolant through the flange.
(1) The adjustment screw has an internal coolant hole.

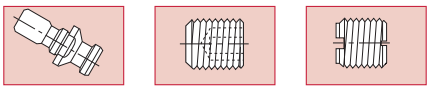

Pull Stud 144
Lock Screw 150
Preset Screw 150

Tungaloy
Member IMC Group

BT MAS 403 • TUNGSHRINK • Thermal SHRINK Holder

A BT-SHRINK

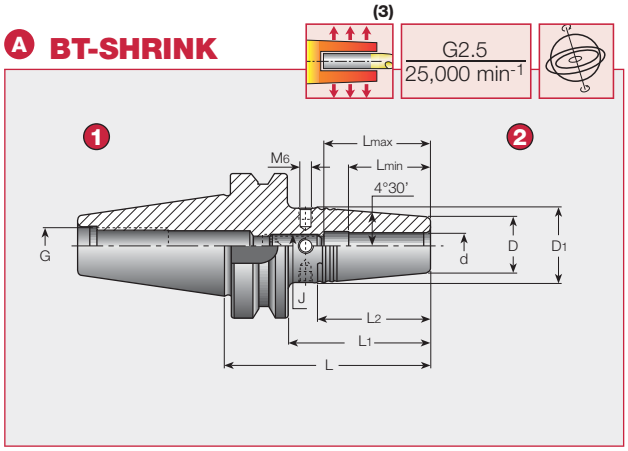

B BT-SHRINK

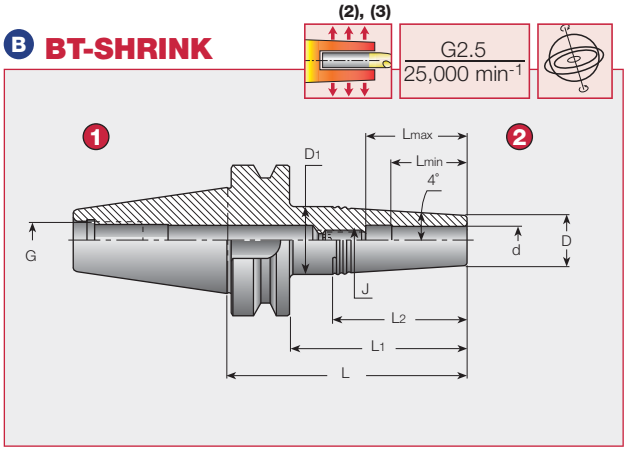

1 BT MAS 403 Form A
2 SRKIN
(for carbide and HSS shank)

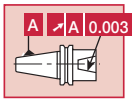

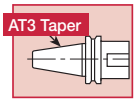

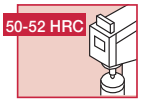

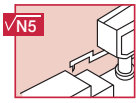

1 BT MAS 403 Form A
2 SRK
(for carbide shank)

A BT-SHRINK Thermal SHRINK Holder (SRKIN type for carbide and HSS shank) (3)

(Unit: mm)

Cat. No.	d	D1	D	L	L1	L2	Lmin	Lmax	J	G	Hex Key
BT40 SRKIN 6X 90	6	27	21	90	63	38.0	25	36	M5	M16	2.5
BT40 SRKIN 8X 90	8	27	21	90	63	38.0	25	36	M6	M16	3.0
BT40 SRKIN 10X 90	10	32	24	90	63	50.5	31	42	M8	M16	4.0
BT40 SRKIN 12X 90	12	32	24	90	63	50.5	36	47	M10	M16	5.0
BT40 SRKIN 14X 90	14	34	27	90	63	44.5	36	47	M10	M16	5.0
BT40 SRKIN 16X 90	16	34	27	90	63	44.5	39	50	M12	M16	6.0
BT40 SRKIN 18X 90	18	42	33	90	63	57.0	39	50	M12	M16	6.0
BT40 SRKIN 20X 90	20	42	33	90	63	57.0	41	52	M16	M16	8.0
BT40 SRKIN 25X110	25	53	44	110	83	57.0	47	58	M16	M16	8.0
BT50 SRKIN 6X100 (1)	6	26	21	100	62	32.0	25	36	M5	M24	2.5
BT50 SRKIN 8X100 (1)	8	27	21	100	62	38.0	25	36	M6	M24	3.0
BT50 SRKIN 10X100 (1)	10	32	24	100	62	51.0	31	42	M8	M24	4.0
BT50 SRKIN 12X100 (1)	12	32	24	100	62	51.0	36	47	M10	M24	5.0
BT50 SRKIN 14X100 (1)	14	34	27	100	62	44.5	36	47	M10	M24	5.0
BT50 SRKIN 16X100 (1)	16	34	27	100	62	44.5	39	50	M12	M24	6.0
BT50 SRKIN 18X100 (1)	18	42	33	100	62	57.0	39	50	M12	M24	6.0
BT50 SRKIN 20X100 (1)	20	42	33	100	62	57.0	41	52	M16	M24	8.0
BT50 SRKIN 25X120 (1)	25	53	44	120	82	57.0	47	58	M16	M24	8.0
BT50 SRKIN 32X120 (1)	32	53	44	120	82	57.0	47	58	M16	M24	8.0

(1) Balanced to G2.5 20,000 min^{-1}
Use only inductive heating device for SRKIN holders.

B BT-SHRINK Thermal SHRINK Holder (SRK type for carbide shank) (2) (3)

(Unit: mm)

Cat. No.	d	D	D1	L	L1	L2	Lmin	Lmax	J	G	Hex Key
BT 40 SRK 3X 50	3	10	15	77	50	35.5	10	16	M6	M16	3
BT 40 SRK 3X 85	3	10	19	112	85	64.1	10	16	M6	M16	3
BT 40 SRK 4X 50	4	10	15	77	50	35.5	12	18	M6	M16	3
BT 40 SRK 4X 85	4	10	19	112	85	64.1	12	18	M6	M16	3
BT 40 SRK 5X 50	5	10	15	77	50	35.5	15	21	M6	M16	3
BT 40 SRK 5X 85	5	10	19	112	85	64.1	15	21	M6	M16	3
BT 40 SRK 6X 50	6	11	16	77	50	35.5	18	24	M8	M16	4
BT 40 SRK 6X 85	6	11	20	112	85	64.1	18	24	M8	M16	4
BT 40 SRK 8X 50	8	14	20	77	50	42.5	25	31	M10	M16	5
BT 40 SRK 8X 85	8	14	23	112	85	63.9	25	31	M10	M16	5
BT 40 SRK 10X 50	10	16	22	77	50	42.4	30	36	M12	M16	6
BT 40 SRK 10X 85	10	16	25	112	85	60.2	30	36	M12	M16	6
BT 40 SRK 12X 50	12	20	26	77	50	42.3	32	42	M10	M16	5
BT 40 SRK 12X 85	12	20	28	112	85	56.6	32	42	M10	M16	5

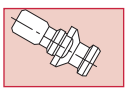
Pull Stud
144

User Guide
131 - 132

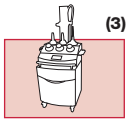
(3)
Induction
137

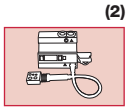
(2)
Thermal
138

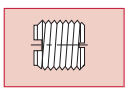
Preset Screw
150

BT MAS 403 • Shell Mill Holder

BT-SEM

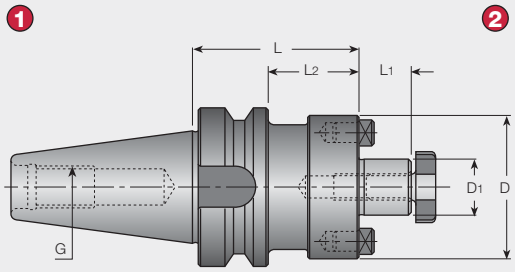

1. BT MAS 403 Form A
2. ISO 3937

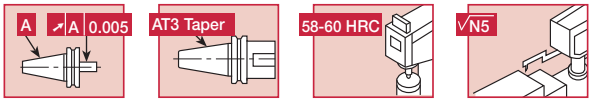

BT-SEM Shell Mill Holder - Metric

(Unit: mm)

Cat. No.	D_1	L_1	D	L	L_2	G
BT30 SEM 16X 50	16	17	38	50	28	M12
BT30 SEM 22X 50	22	19	47	50	18	M12
BT30 SEM 27X 50	27	21	58	50	18	M12
BT40 SEM 16X 60	16	17	38	60	33	M16
BT40 SEM 16X120	16	17	38	120	93	M16
BT40 SEM 22X 60	22	19	47	60	33	M16
BT40 SEM 22X120	22	19	47	120	93	M16
BT40 SEM 27X 45	27	21	58	45	18	M16
BT40 SEM 27X105	27	21	58	105	78	M16
BT40 SEM 32X 60	32	24	65	60	23	M16
BT40 SEM 32X 75	32	24	65	75	36	M16
BT40 SEM 40X 60	40	27	82	60	23	M16
BT40 SEM 40X 75	40	27	82	75	38	M16
BT50 SEM 16X 75	16	17	38	75	37	M24
BT50 SEM 16X120	16	17	38	120	82	M24
BT50 SEM 22X 50X220	22	19	50	220	182	M24
BT50 SEM 22X 64X320	22	19	64	320	282	M24
BT50 SEM 22X 75	22	19	47	75	37	M24
BT50 SEM 22X120	22	19	47	120	82	M24
BT50 SEM 27X 60	27	21	58	60	22	M24
BT50 SEM 27X105	27	21	58	105	67	M24
BT50 SEM 32X 48	32	24	66	48	10	M24
BT50 SEM 32X 75	32	24	66	75	37	M24
BT50 SEM 32X 78X390	32	24	78	370	332	M24
BT50 SEM 40X 48	40	27	82	48	10	M24
BT50 SEM 40X 75	40	27	82	75	37	M24

BT-SEM Shell Mill Holder - Inch

(Unit: mm)

Cat. No.	D_1	L_1	D	L	L_2	G
BT40 SEM 1/2X2.375	12.7	14.5	35	60.3	18.5	M16
BT40 SEM 3/4X2.375	19.05	17	45	60.3	33	M16
BT40 SEM 1X1.750	25.4	17	55	44.5	17.4	M16
BT40 SEM 1-1/4X2.375	31.75	17	64	60.3	23	M16
BT40 SEM 1-1/2X2.375	38.1	23.8	78	60.3	20.8	M16
BT50 SEM 1X2.375	25.4	17	55	60.3	22.3	M24
BT50 SEM 1-1/4X1.875	31.75	17	64	47.6	10	M24
BT50 SEM 1-1/2X1.875	38.1	23.8	78	47.6	9.6	M24
BT50 SEM 2 X2.375	50.8	23.8	98	60.3	22.3	M24

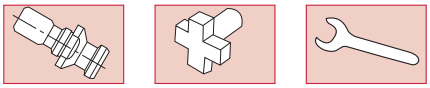

Pull Stud 144
Lock Screw 150
Wrench 151

Tungaloy
Member IMC Group

BT MAS 403 • Shell Mill Holder / Face Mill Holder

BT-SEM-C

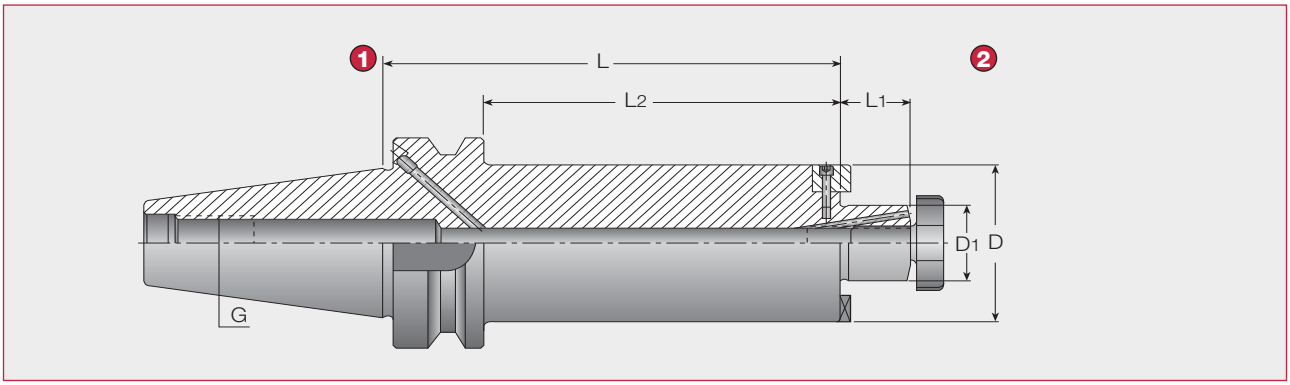

1 **BT MAS 403 Form A/B**
2 **ISO 3937**

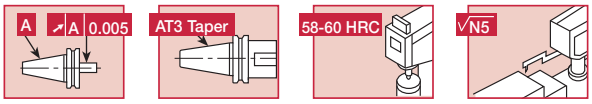

BT-SEM-C Extra Long Shell Mill Holder with Coolant Hole

(Unit: mm)

Cat. No.	D_1	D	L	L_1	L_2	G
BT50 SEM 22X 48X220C	22	48	220	19	182	M24
BT50 SEM 22X 61X320C	22	61	320	19	282	M24
BT50 SEM 27X 61X320C	27	61	320	21	282	M24
BT50 SEM 32X 78X390C	32	78	390	24	352	M24

If the “B type” option is required, the plug screw must be removed from the flange cooling hole (use a 2 mm hex key).

BT-FM

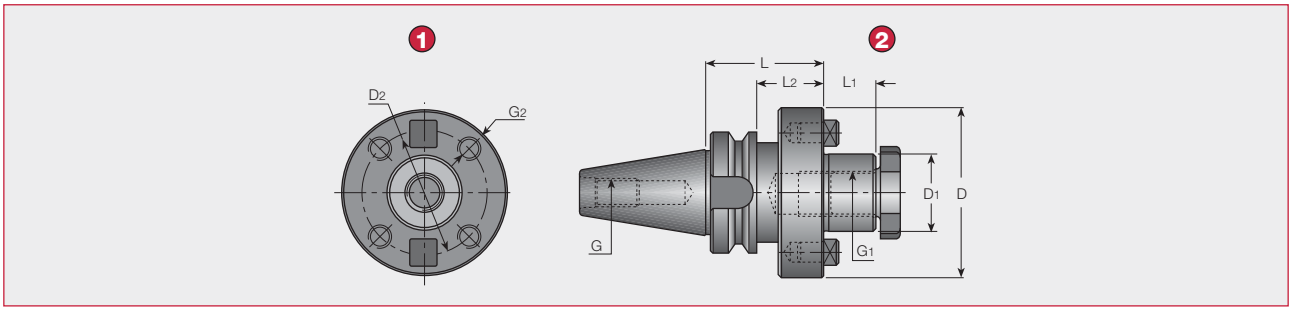

1 **BT MAS 403 Form A** 2 **DIN6357**

BT-FM Face Mill Holder - Metric

(Unit: mm)

Cat. No.	D_1	L_1	L	L_2	D	D_2	G_1	G_2	G
BT40 FM 40	40	27	60	22	88	66.7	M20	M12	M16
BT50 FM 40	40	27	50	12	88	66.7	M20	M12	M24
BT50 FM 60	60	38	88	40	128	101.6	-	M16	M24

BT-FM Face Mill Holder - Inch

(Unit: mm)

Cat. No.	D_1	L_1	L	L_2	D	D_2	G_1	G_2	G
BT50 FM 2-1/2X3.469	63.5	28.6	88.1	-	128.6	101.6	-	5/8-11	M24

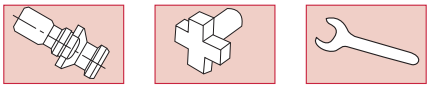

Pull Stud 144
Lock Screw 150
Wrench 151

BT MAS 403 • Shell Mill Holder / Drill Chuck Holder

A BT-SEMC

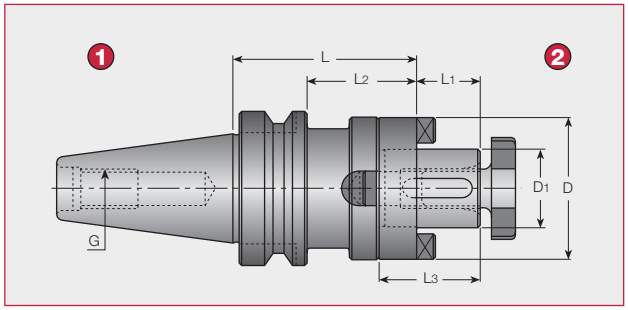

B BT-DC-B

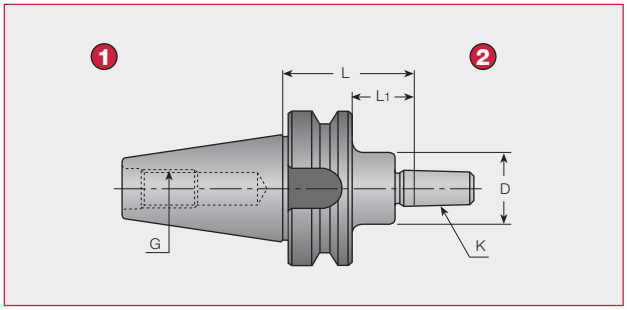

1 BT MAS 403 Form A
2 DIN6358

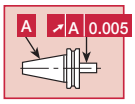

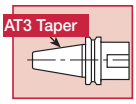

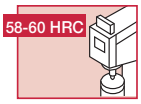

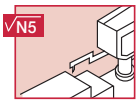

1 BT MAS 403 Form A
2 DIN238

A BT-SEMC COMBI – Shell Mill Holder (Combination type)

(Unit: mm)

Cat. No.	D_1	L_1	D	L	L_2	L_3	G
BT40 SEMC 16X 50	16	17	32	50	23	27	M16
BT40 SEMC 16X100	16	17	32	100	73	27	M16
BT40 SEMC 22X 53	22	19	40	53	26	31	M16
BT40 SEMC 22X100	22	19	40	100	73	31	M16
BT40 SEMC 27X 55	27	21	48	55	28	33	M16
BT40 SEMC 27X100	27	21	48	100	73	33	M16
BT40 SEMC 32X 60	32	24	58	60	33	38	M16
BT40 SEMC 32X100	32	24	58	100	73	38	M16
BT40 SEMC 40X 80	40	27	70	80	53	41	M16
BT50 SEMC 16X 65	16	17	32	65	27	27	M24
BT50 SEMC 16X100	16	17	32	100	62	27	M24
BT50 SEMC 16X150	16	17	32	150	112	27	M24
BT50 SEMC 22X 68	22	19	40	68	30	31	M24
BT50 SEMC 22X100	22	19	40	100	62	31	M24
BT50 SEMC 22X150	22	19	40	150	112	31	M24
BT50 SEMC 27X 78	27	21	48	78	40	33	M24
BT50 SEMC 27X100	27	21	48	100	62	33	M24
BT50 SEMC 27X150	27	21	48	150	112	33	M24
BT50 SEMC 32X 78	32	24	58	78	40	38	M24
BT50 SEMC 32X100	32	24	58	100	62	38	M24
BT50 SEMC 32X150	32	24	58	150	112	38	M24
BT50 SEMC 40X 78	40	27	70	78	40	41	M24
BT50 SEMC 40X100	40	27	70	100	62	41	M24
BT50 SEMC 40X150	40	27	70	150	112	41	M24
BT50 SEMC 50X 79	50	30	90	79	41	46	M24
BT50 SEMC 50X100	50	30	90	100	62	46	M24
BT50 SEMC 50X150	50	30	90	150	112	46	M24

B BT-DC-B Drill Chuck Holder

(Unit: mm)

Cat. No.	K	L	D	L_1	G
BT30 DC B12X 30	B12	30	-	8.0	M12
BT30 DC B16X 30	B16	30	-	8.0	M12
BT40 DC B12X 45	B12	45	24	18.0	M16
BT40 DC B12X 90	B12	90	24	63.0	M16
BT40 DC B16X 45	B16	45	30	18.0	M16
BT40 DC B16X 90	B16	90	30	63.0	M16
BT40 DC B18X 45	B18	45	30	18.0	M16
BT40 DC B18X 90	B18	90	30	63.0	M16
BT50 DC B12X 45	B12	45	-	6.7	M24
BT50 DC B12X105	B12	105	24	67.0	M24
BT50 DC B16X 45	B16	45	-	7.0	M24
BT50 DC B16X105	B16	105	50	67.0	M24
BT50 DC B18X 45	B18	45	-	7.0	M24
BT50 DC B18X105	B18	105	30	67.0	M24

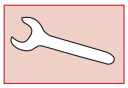

Wrench
151

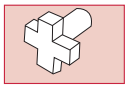

Lock Screw
150

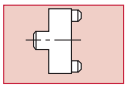

Driving Ring
151

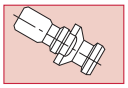

Pull Stud
144

Tungaloy
Member IMC Group

BT MAS 403 • Conversion Adapter / Morse Taper Holder

A BT-AD

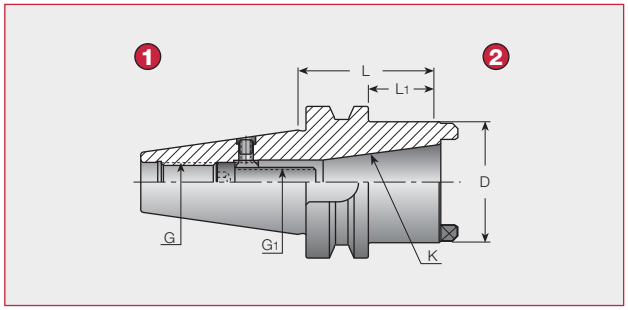

B BT-MT

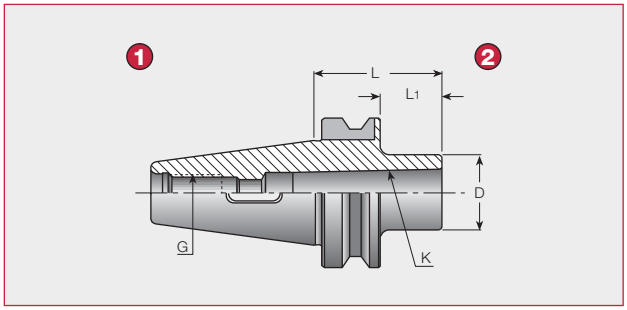

1 **BT MAS 403 Form A**
2 **DIN2080**
DIN69871/A
BT MAS 403

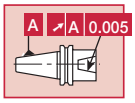

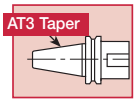

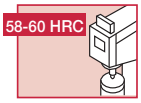

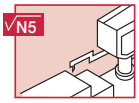

1 **BT MAS 403 Form A**
2 **DIN6383**
DIN228-2 Form D

A BT-AD Conversion Adapter

(Unit: mm)

Cat. No.	K	L	L_1	D	G_1	G
BT40 AD BT/SK30	DIN69871/A, BT MAS-403	60	33	50	M12	M16
BT40 AD 30	DIN2080	60	33	50	M12	M16
BT50 AD BT/SK40	DIN69871/A, BT MAS-403	75	37	66	M16	M24
BT50 AD 40	DIN2080	70	32	63	M16	M24

B BT-MT Morse Taper Holder

(Unit: mm)

Cat. No.	K	L	L_1	D	G
BT30 MT1X 45	MT1	45	23	25	M12
BT30 MT2X 60	MT2	60	38	32	M12
BT40 MT1X 45	MT1	45	18	25	M16
BT40 MT1X120	MT1	120	93	25	M16
BT40 MT2X 60	MT2	60	33	32	M16
BT40 MT2X120	MT2	120	93	32	M16
BT40 MT3X 75	MT3	75	48	40	M16
BT40 MT3X139	MT3	139	112	40	M16
BT40 MT4X 95	MT4	95	68	50	M16
BT50 MT1X 45	MT1	45	7	25	M24
BT50 MT1X120	MT1	120	82	25	M24
BT50 MT1X180	MT1	180	142	25	M24
BT50 MT2X 45	MT2	45	7	32	M24
BT50 MT2X135	MT2	135	97	32	M24
BT50 MT2X180	MT2	180	142	32	M24
BT50 MT3X 45	MT3	45	7	40	M24
BT50 MT3X150	MT3	150	112	40	M24
BT50 MT3X180	MT3	180	142	40	M24
BT50 MT4X 75	MT4	75	37	50	M24
BT50 MT4X180	MT4	180	142	50	M24
BT50 MT5X105	MT5	105	67	70	M24

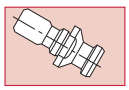

Pull Stud

144

BT MAS 403 • Morse Taper Holder

BT-MT-DRW

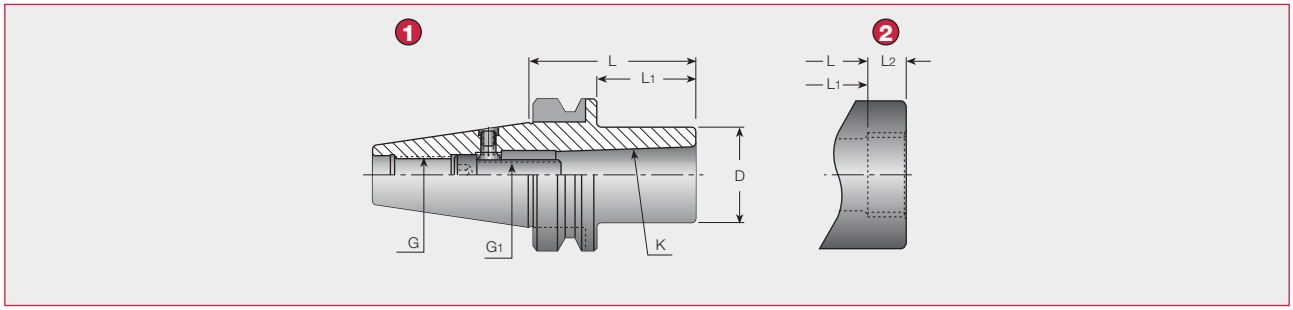

1. **BT MAS 403 Form A**
2. **DIN6364**
   DIN228-2 Form B

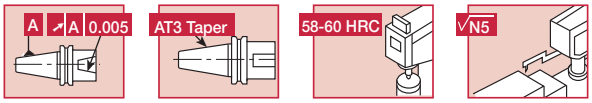

BT-MT-DRW Morse Taper Draw Bar type Hplder

(Unit: mm)

Cat. No.	K	L	L_1	L_2	D	G1	G
BT40 MT1 DRW	MT1	50	23	-	25	M6	M16
BT40 MT2 DRW	MT2	50	23	-	32	M10	M16
BT40 MT3 DRW	MT3	70	43	-	40	M12	M16
BT40 MT4 DRW (1)	MT4	95	68	15	63	M16	M16
BT50 MT1 DRW	MT1	45	7	-	25	M6	M24
BT50 MT2 DRW	MT2	60	22	-	32	M10	M24
BT50 MT3 DRW	MT3	65	27	-	40	M12	M24
BT50 MT4 DRW (1)	MT4	70	32	15	63	M16	M24
BT50 MT5 DRW (1)	MT5	100	62	18	78	M20	M24

(1) DIN2201.

ADJ BT-ER

G2.5
20,000 min^{-1}

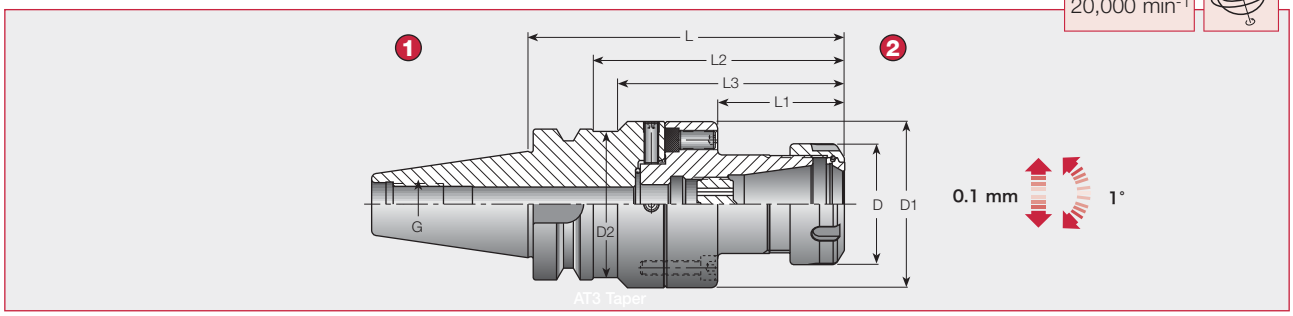

1. **BT MAS 403 Form A/B**
2. **DIN6499**

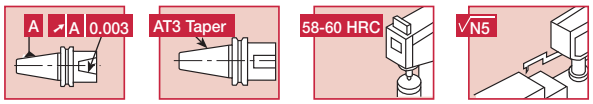

ADJ BT-ER ER Cllet Chuck with Center Alignment

(Unit: mm)

Cat. No.	Range	L	L_1	L_2	L_3	D	D_1	D_2	G
ADJ BT40 D70 ER32	2-20	129.5	52.5	102.5	92.5	50	70	62.5	M16
ADJ BT50 D70 ER32	2-20	144.5	52.5	106.5	-	50	70	-	M24

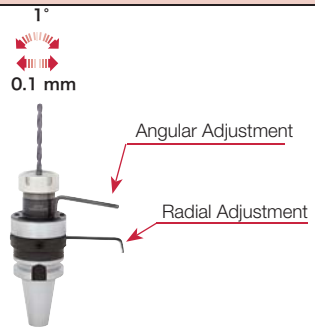

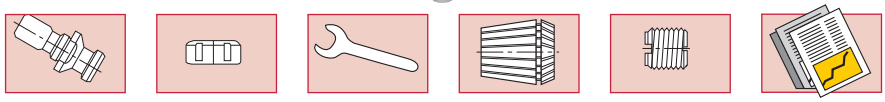

Pull Stud	Nut	Wrench	ER Collet	Preset Screw	User Guide
144	147	148	116 - 119	149	113 - 115

Tungaloy
Member IMC Group

BT MAS 403 • TUNGBORE • Diameter Adjust

BORE BT-EM

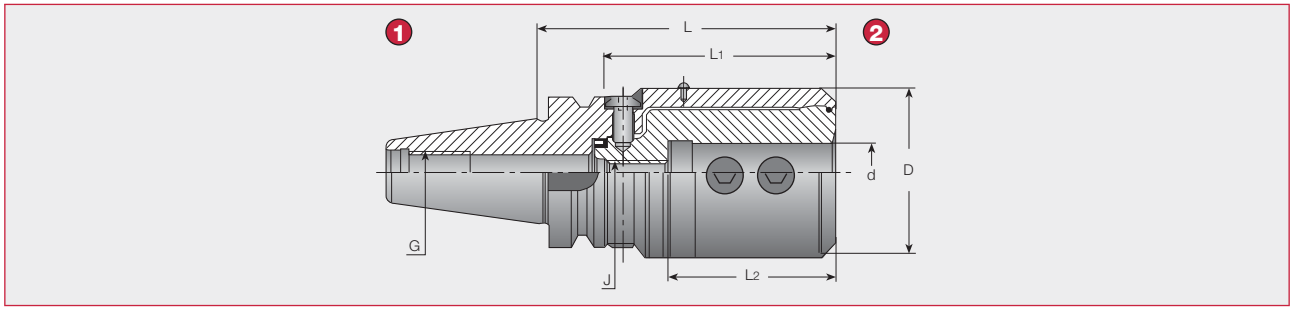

1 **BT MAS 403 Form A/B**
2 **ISO 9766**

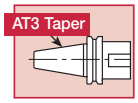

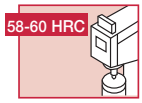

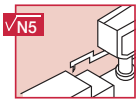

BORE BT-EM Adjustable Drilling Diameter Holder

(Unit: mm)

Cat. No.	d	D	L	L1	L2	J	G
FITBORE BT40 EM16	16	72	123.5	96.5	71	M10	M16
FITBORE BT40 EM20	20	72	123.5	96.5	71	M10	M16
FITBORE BT40 EM25	25	72	123.5	96.5	71	M10	M16
FITBORE BT40 EM32	32	72	123.5	96.5	71	M10	M16
FITBORE BT40 EM40	40	72	123.5	96.5	71	M10	M16
FITBORE BT50 EM16	16	72	134.5	96.5	71	M10	M24
FITBORE BT50 EM20	20	72	134.5	96.5	71	M10	M24
FITBORE BT50 EM25	25	72	134.5	96.5	71	M10	M24
FITBORE BT50 EM32	32	72	134.5	96.5	71	M10	M24
FITBORE BT50 EM40	40	72	134.5	96.5	71	M10	M24

Add B for coolant through the flange.

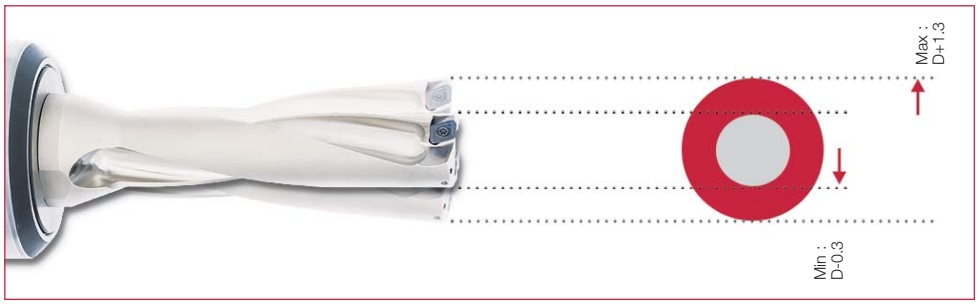

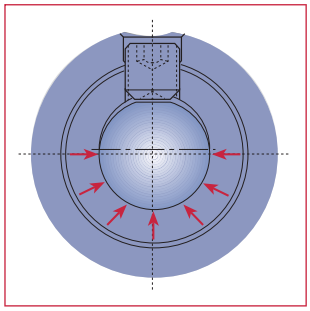

The bore's section is actually made from two shifted circular sections. The clamping screw pushes the drill shank through a narrowed opening, forcing elastic deformation of the holder. Contact is made around more than 180°, providing a high clamping force.

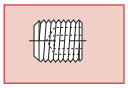
Preset Screw
150

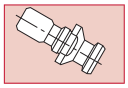
Pull Stud
144

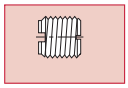
Preset Screw
150

User Guide
7

BT MAS 403 • TUNGGTI • Tapping Holder

GTI BT-ER

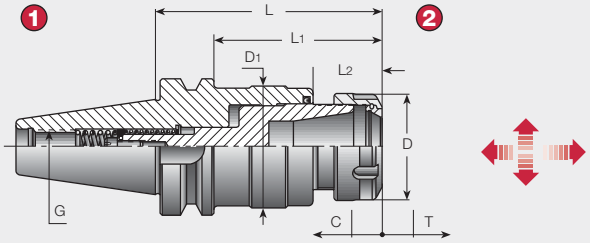

1. **BT MAS 403 Form A**
2. **DIN6499 GTI**

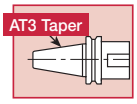

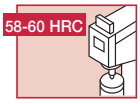

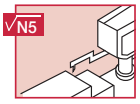

GTI BT-ER Tapping Holder

(Unit: mm)

Cat. No.	Tap Capacity	Range	G	L	L_1	L_2	D	D_1	T	C
GTI BT40 ER16	M3-M10	0.5-10	M16	84.2	52.7	24.6	28	29.5	8	3
GTI BT40 ER32	M6-M20	2-20	M16	106.8	79.8	33	50	56.5	9	4
GTI BT40 ER40	M6-M28	3-26	M16	124.8	97.8	51	63	56.5	9	4
GTI BT50 ER16	M3-M10	0.5-10	M24	106.8	68.8	24.6	28	29.5	8	3
GTI BT50 ER32	M6-M20	2-20	M24	115.2	77.2	33	50	56.5	9	4
GTI BT50 ER40	M6-M28	3-26	M24	133.2	95.2	51	63	56.5	9	4

TUNGFIT • Modular System

BT-CF

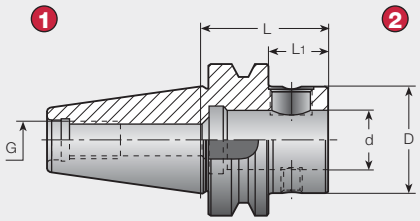

1. **BT MAS 403 Form A/B**
2. **TungFit**

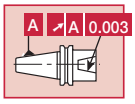

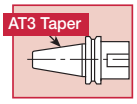

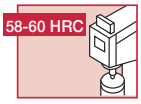

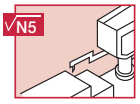

BT-CF Modular System

(Unit: mm)

Cat. No.	Taper	L	L_1	D	d	G
BT40 CF4-L	40	110	83	44.5	CF4	M16
BT40 CF4-S	40	52	25	44.5	CF4	M16
BT50 CF4-L	50	115	77	44.5	CF4	M24
BT50 CF4-S	50	63	25	44.5	CF4	M24

⚠ Tightening torque: 58.8 N·m
Add B for coolant through the flange.

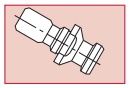
Pull Stud
144

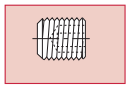
Lock Screw
150

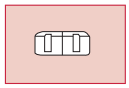
Nut
147

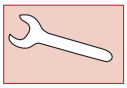
Wrench
148

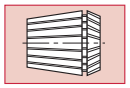
ER Collet
116 - 119

User Guide
113 - 115, 7

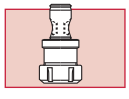
Tooling
112

Tungaloy
Member IMC Group

BT MAS 403 • TUNGCLICK • Quick Change Holder

BT-ER-CLICK

G2.5
20,000 min-1

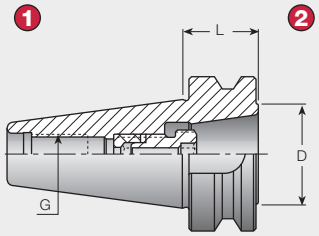

1 **BT MAS 403 Form A**
2 **DIN6499 ER-CLICK**

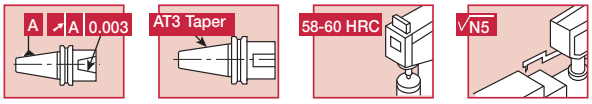

BT-ER-CLICK Quick Change System

(Unit: mm)

Cat. No.	L	D	G
BT40 ER32 CLICK-IN	28	41	M16
BT50 ER32 CLICK-IN	39	41	M24

⚠ Tightening torque: 235 N·m

TUNGFLEX • Indexable Modular System

BT-ODP

G2.5
20,000 min-1

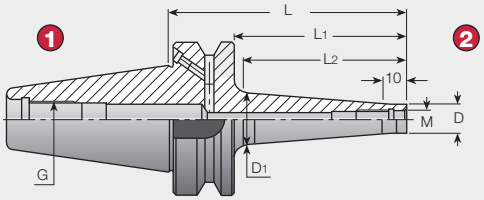

1 **BT MAS 403 Form A/B**
2 **TungFlex**

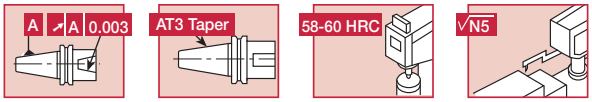

BT-ODP Indexable Modular System

(Unit: mm)

Cat. No.	M	D	D_1	L	L_1	L_2	G
BT40 ODP 6X 66	M6	9.8	13.0	66	39	30	M16
BT40 ODP 6X106	M6	9.8	23.0	106	79	70	M16
BT40 ODP 8X 66	M8	13.0	15.0	66	39	30	M16
BT40 ODP 8X106	M8	13.0	23.0	106	79	70	M16
BT40 ODP10X 66	M10	18.0	20.0	66	39	30	M16
BT40 ODP10X106	M10	18.0	28.0	106	79	70	M16
BT40 ODP12X 66	M12	21.0	24.0	66	39	30	M16
BT40 ODP12X106	M12	21.0	31.0	106	79	70	M16
BT40 ODP16X 66	M16	29.0	28.6	66	39	-	M16
BT40 ODP16X106	M16	29.0	34.0	106	79	70	M16
BT50 ODP12X 94	M12	23.0	30.0	94	56	50	M24
BT50 ODP12X 144 (1)	M12	23.0	40.0	144	106	100	M24
BT50 ODP12X 194 (1)	M12	23.0	40.0	194	156	150	M24
BT50 ODP12X 244 (1)	M12	23.0	46.0	244	206	200	M24
BT50 ODP16X 94 (1)	M16	29.0	34.0	94	56	50	M24
BT50 ODP16X 144 (1)	M16	29.0	40.0	144	106	100	M24
BT50 ODP16X 194 (1)	M16	29.0	55.0	194	156	150	M24
BT50 ODP16X 244 (1)	M16	29.0	60.0	244	206	200	M24

(1) Balanced to G6.3 12,000 min-1

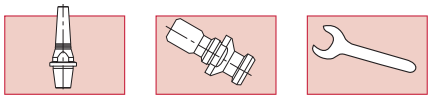

TungClick 140 | Pull Stud 144 | Wrench 148

CAT • Shank Standaed

CAT A.N.S.I. B5.50 Form A/B

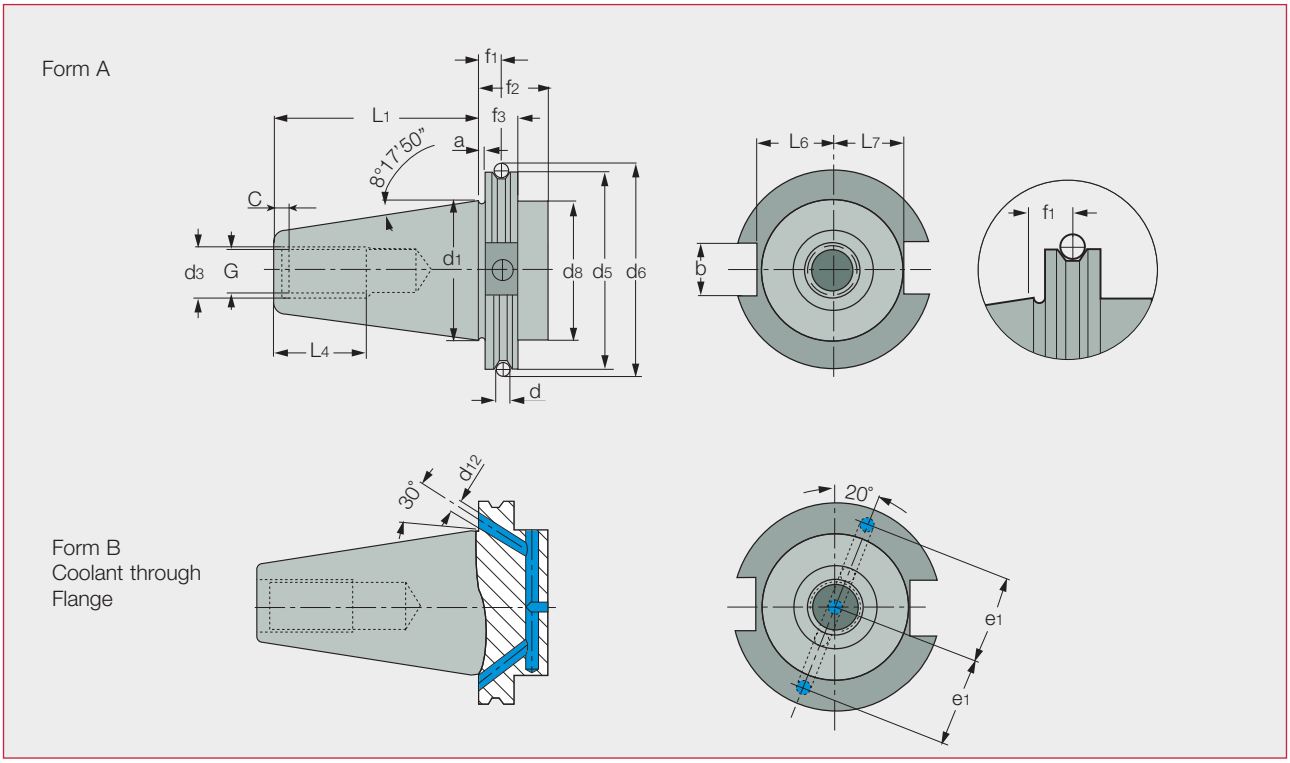

(Unit: inch)

Shank	b±00.1	d	d_1	G UNC-2B	d_3±0.1	C±0.1	d_6±0.02	d_5±0.02	d_8±0.05	f_1 ±0.05
CAT 30	.645	.2756	1.250	1/2-13	.590	.188	2.176	1.812	1.250	.4375
CAT 40	.645	.2756	1.750	5/8-11	.720	.188	2.863	2.500	1.750	.4375
CAT 50	1.02	.2756	2.750	1-8	1.125	.250	4.238	3.875	2.750	.4375

(Unit: inch)

Shank	f_2 min	f_3±0.02	L_1±0.05	L_4 min	L_6 .000-.015	L_7 .000-.015	e_1±0.04	d_{12}	a	TAPER AT3
CAT 30	1.38	.750	1.875	1.000	.735	.640	.826	.157	.125	0.002
CAT 40	1.38	.750	2.687	1.120	.985	.890	1.062	.157	.125	0.003
CAT 50	1.38	.750	4.000	1.750	1.485	1.390	1.653	.236	.125	0.004

Note: Size table is inch.

Tungaloy
Member IMC Group

CAT • ER Collet Chuck Holder

CAT-ER

G2.5
20,000 min-1

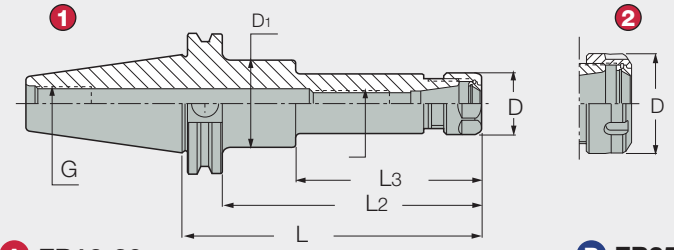

A ER16-20 B ER25-50

1 CAT Form A/B
2 DIN6499

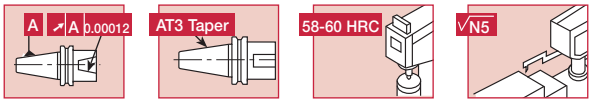

A CAT-ER ER Collet Chuck Holder

(Unit: inch)

Cat. No.	Range	L	L1	L2	D	D1	G	J
CAT30 ER16X2.750 (1)	0.022 ~ 0.396	2.75	2	1.37	1.102	1.248	1/2-13	M10
CAT30 ER20X2.562 (1)	0.041 ~ 0.514	2.562	1.813	1.102	1.248	1.248	1/2-13	M12
CAT40 ER16X2.750	0.022 ~ 0.396	2.75	2	1.37	1.102	1.752	5/8-11	M12
CAT40 ER16X3.937	0.022 ~ 0.396	3.937	3.187	2.56	1.102	1.752	5/8-11	M12
CAT40 ER16X5.906	0.022 ~ 0.396	5.906	5.156	3.35	1.102	1.752	5/8-11	M12
CAT40 ER20X3.937	0.041 ~ 0.514	3.937	3.187	2.56	1.339	1.752	5/8-11	M12
CAT40 ER20X5.906	0.041 ~ 0.514	5.906	5.156	3.78	1.339	1.752	5/8-11	M12
CAT50 ER16X3.937 (1)	0.022 ~ 0.396	3.937	3.187	2.56	1.102	2.752	1-8	M12
CAT50 ER16X5.906 (1)	0.022 ~ 0.396	5.906	5.156	3.49	1.102	2.752	1-8	M12
CAT50 ER16X8.000 (1)	0.022 ~ 0.396	8	7.25	2.98	1.102	2.752	1-8	M12
CAT50 ER20X3.937 (1)	0.041 ~ 0.514	3.937	3.187	2.56	1.349	2.752	1-8	M16
CAT50 ER20X5.906 (1)	0.041 ~ 0.514	5.906	5.156	4.53	1.349	2.752	1-8	M16
CAT50 ER20X8.000 (1)	0.041 ~ 0.514	8	7.25	4.62	1.349	2.752	1-8	M16

Add B for coolant through the flange.
(1) Balanced to G6.3 at 12,000 min-1

B CAT-ER ER Collet Chuck Holder

(Unit: inch)

Cat. No.	Range	L	L1	L2	D	D1	G	J
CAT30 ER32X3.268 (1)	0.08 ~ 0.789	3.268	2.518	1.89	1.968	1.248	1/2-13	M18X1.5
CAT40 ER25X2.562	0.041 ~ 0.632	2.562	1.812	1.18	1.654	1.752	5/8-11	M16
CAT40 ER25X4.000	0.041 ~ 0.632	4	3.25	2.62	1.654	1.752	5/8-11	M16
CAT40 ER25X6.000	0.041 ~ 0.632	6	5.25	4.62	1.654	1.752	5/8-11	M16
CAT40 ER32X2.562	0.08 ~ 0.789	2.562	1.812	-	1.968	1.752	5/8-11	M22X1.5
CAT40 ER32X4.000	0.08 ~ 0.789	4	3.25	-	1.968	1.752	5/8-11	M22X1.5
CAT40 ER32X6.000	0.08 ~ 0.789	6	5.25	-	1.968	1.752	5/8-11	M22X1.5
CAT40 ER40X3.359	0.12 ~ 1.025	3.359	2.609	-	2.48	1.752	5/8-11	M28X1.5
CAT40 ER40X4.000	0.12 ~ 1.025	4	3.25	-	2.48	1.752	5/8-11	M28X1.5
CAT50 ER25X4.000 (1)	0.041 ~ 0.632	4	3.25	2.58	1.654	2.752	1-8	M16
CAT50 ER25X6.000 (1)	0.041 ~ 0.632	6	5.25	4.62	1.654	2.752	1-8	M16
CAT50 ER25X8.000 (1)	0.041 ~ 0.632	8	7.25	6.58	1.654	2.752	1-8	M16
CAT50 ER32X4.000 (1)	0.08 ~ 0.789	4	3.25	2.54	1.968	2.752	1-8	M22X1.5
CAT50 ER32X6.000 (1)	0.08 ~ 0.789	6	5.25	4.58	1.968	2.752	1-8	M22X1.5
CAT50 ER32X8.000 (1)	0.08 ~ 0.789	8	7.25	6.58	1.968	2.752	1-8	M22X1.5
CAT50 ER40X4.000 (1)	0.12 ~ 1.025	4	3.25	2.62	2.48	2.752	1-8	M28X1.5
CAT50 ER40X6.000 (1)	0.12 ~ 1.025	6	5.25	4.62	2.48	2.752	1-8	M28X1.5
CAT50 ER40X8.000 (1)	0.12 ~ 1.025	8	7.25	6.58	2.48	2.752	1-8	M28X1.5
CAT50 ER50X4.000 (1)	0.396 ~ 1.338	4	3.25	-	3.07	2.752	1-8	M36X1.5
CAT50 ER50X6.000 (1)	0.396 ~ 1.338	6	5.25	-	3.07	2.752	1-8	M36X1.5

Add B for coolant through the flange.
(1) Balanced to G6.3 at 12,000 min-1

Note: Size table is inch.

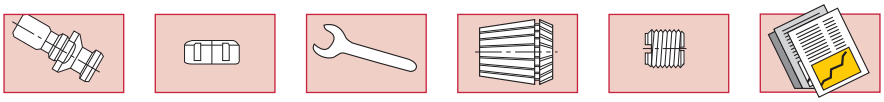

Pull Stud 144
Nut 147
Wrench 148
ER Collet 116 - 119
Preset Screw 149
User Guide 113 - 115

A CAT-ER-SHORT

G2.5
20,000 min-1

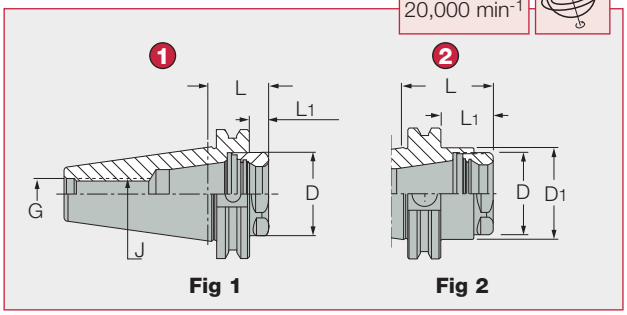

Fig 1 Fig 2

1 CAT Form A/B
2 DIN6499 ER-SHORT

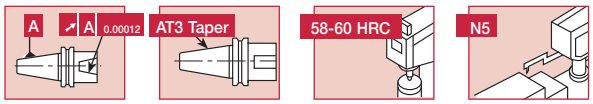

B CAT-ER-BALANCE

G2.5 (1)
20,000 min-1

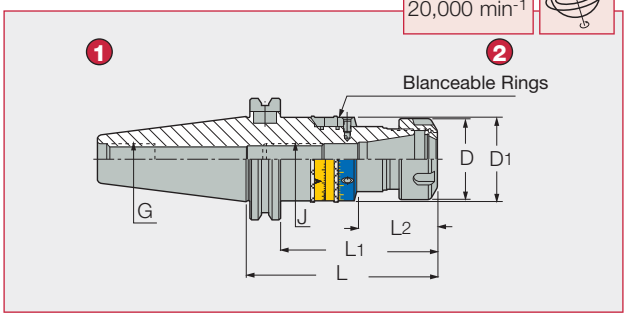

1 CAT Form A/B
2 DIN6499 ER-BALANCE

A CAT-ER-SHORT Short ER Collet Chuck Holder

(Unit: inch)

Cat. No.	Range	L	L1	D	D1	J	G	G1	Fig
CAT40 ER32 SHORT	0.08 ~ 0.789	1.124	0.374	1.575	-	5/8X1 1	5/8X11	M40X1.5	1
CAT40 ER32 SHORT M	0.08 ~ 0.789	1.754	1	1.575	1.75	5/8X11	5/8X11	M40X1.5	2
CAT40 ER40 SHORT	0.12 ~ 1.025	2.124	1.37	1.969	2.362	5/8X11	5/8X11	M50X1.5	2
CAT50 ER32 SHORT	0.08 ~ 0.789	1.124	0.374	1.575	-	M22X1.5	1-8	M40X1.5	1
CAT50 ER32 SHORT M	0.08 ~ 0.789	1.754	1	1.575	2.752	M22X1.5	1-8	M40X1.5	2
CAT50 ER40 SHORT	0.12 ~ 1.025	1.124	0.374	1.969	-	M28X1.5	1-8	M50X1.5	1
CAT50 ER40 SHORT M	0.12 ~ 1.025	1.754	1	1.969	2.752	M28X1.5	1-8	M50X1.5	2

Add B for coolant through the flange.
These tool holders can be used only one vertical machines with an umbrella type ATC.
(They cannot be used with arm type ATC.)

B CAT-ER-BALANCE Balanceable ER Collet Chuck Holder

(Unit: inch)

Cat. No.	Range	L	L1	L2	D	D1	G	J
CAT40 ER16X4.000 BIN	0.022 ~ 0.396	4	3.25	1.68	1.102	1.73	5/8-11	M12
CAT40 ER16X6.000 BIN	0.022 ~ 0.396	6	5.25	2.94	1.102	1.73	5/8-11	M12
CAT40 ER20X4.000 BIN	0.041~ 0.514	4	3.25	1.68	1.339	1.73	5/8-11	M12
CAT40 ER20X6.000 BIN	0.041~ 0.514	6	5.25	3.68	1.339	1.73	5/8-11	M12
CAT40 ER25X4.000 BIN	0.041~ 0.632	4	3.25	1.68	1.654	1.73	5/8-11	M16
CAT40 ER25X6.000 BIN	0.041~ 0.632	6	5.25	3.68	1.654	1.73	5/8-11	M16
CAT40 ER32X4.000 BIN	0.08 ~ 0.789	4	3.25	1.5	1.968	2.36	5/8-11	M22X1.5
CAT40 ER32X6.000 BIN	0.08 ~ 0.789	6	5.25	3.5	1.968	2.36	5/8-11	M22X1.5
CAT40 ER40X4.000 BIN	0.12 ~ 1.025	4	3.25	1.46	2.48	2.36	5/8-11	M28X1.5

(1) Balanced to G2.5 at 20,000 min-1

Note: Size table is inch.

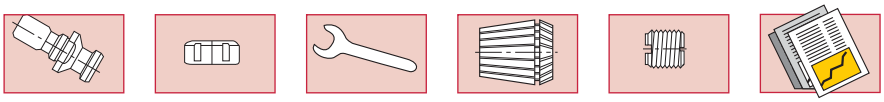

Pull Stud	Nut	Wrench	ER Collet	Preset Screw	User Guide
144	147	148	116 - 119	149	113 - 115, 9, 6

Tungaloy
Member IMC Group

A CAT-MAX

G6.3
10,000 min-1

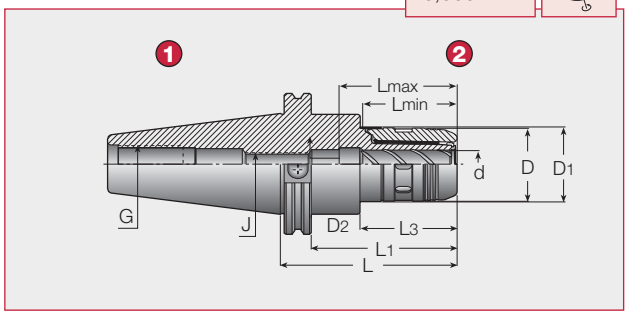

B CAT-MAX-BALANCE

G6.3
10,000 min-1

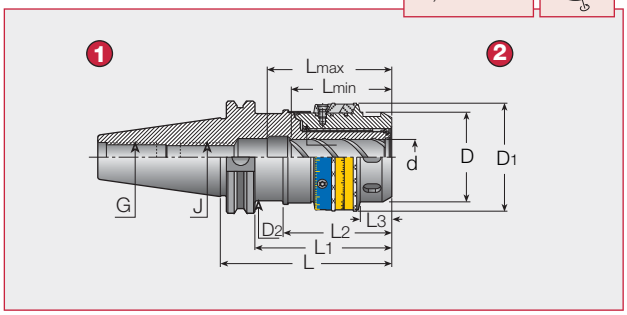

1 CAT Form A/B
2 TungMAX

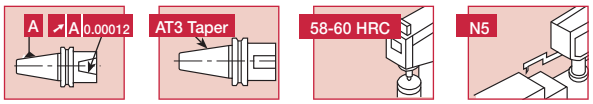

1 CAT Form A/B
2 TungBlance

A CAT-MAX Power Chuck Holder

(Unit: inch)

Cat. No.	Range	d	D	D1	D2	L	L1	L3	Lmin	Lmax	J	G
CAT40 MAXIN 1-1/4X4.16	0.25 ~ 1.25	1.25	2.717	2.756	-	4.16	3.41	-	2.76	3.23	M16	5/8-11
CAT40 MAXIN 3/4X3.75	0.25 ~ 0.75	0.75	2	2.087	1.752	3.744	2.992	2.362	2.19	2.72	M16	5/8-11
CAT50 MAXIN 1-1/4X4.05 (1)	0.25 ~ 1.25	1.25	2.717	2.752	-	4.05	3.3	-	2.76	3.31	M20X2	1-8
CAT50 MAXIN 1-1/4X5.314 (1)	0.25 ~ 1.25	1.25	2.717	2.752	-	5.315	4.565	-	2.78	3.34	M20X2	1-8
CAT50 MAXIN 3/4X4.13 (1)	0.25 ~ 0.75	0.75	2	2.087	2.752	4.138	3.386	2.244	2.19	2.72	M16	1-8

Add B for coolant through the flange.
(1) Balanced to G6.3 at 8,000 min-1

B CAT-MAX-BALANCE Balanceable Power Chuck Holder

(Unit: inch)

Cat. No.	Range	d	D	D1	D2	L	L1	L2	L3	Lmin	Lmax	J	G
CAT40 MAXIN 1-1/4X4.16BIN (1)	0.25 ~ 1.25	1.25	2.697	3.141	1.752	4.16	3.41	2.776	0.98	2.76	3.23	M16	5/8-11
CAT40 MAXIN 3/4X3.75BIN (1)	0.25 ~ 0.75	0.75	1.988	2.394	1.752	3.744	2.992	2.362	0.689	2.19	2.72	M16	5/8-11
CAT50 MAXIN 1-1/4X4.05BIN (2)	0.25 ~ 1.25	1.25	2.697	3.141	2.752	4.05	3.3	2.657	0.98	2.76	3.31	M20X2	1-8
CAT50 MAXIN 3/4X4.13BIN (2)	0.25 ~ 0.75	0.75	1.988	2.394	2.752	4.138	3.386	2.244	0.689	2.19	2.72	M16	1-8

Add B for coolant through the flange.
(1) Chucks with taper size 40 can be balanced by the balancing ring up to G2.5 at 20,000 min-1
(2) Chucks with taper size 50 can be balanced by the balancing ring up to G2.5 at 18,000 min-1

Note: Size table is inch.

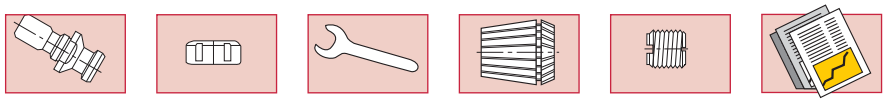
Pull Stud 144
Nut 147
Wrench 148
ER Collet 116 - 119
Preset Screw 149
User Guide 6, 9

CAT • Side Lock Endmill Chuck Holder

CAT-EM

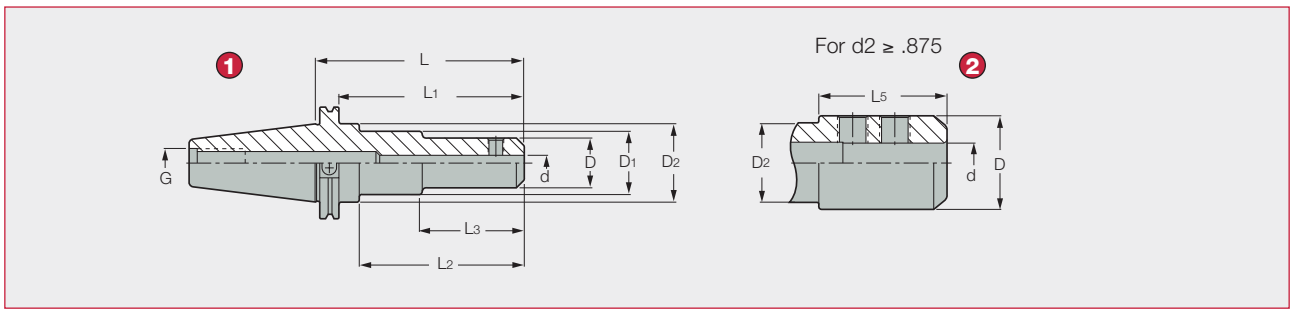

1 **CAT Form A/B**
2 **DIN6359**
DIN1835 Form B (Weldon type)

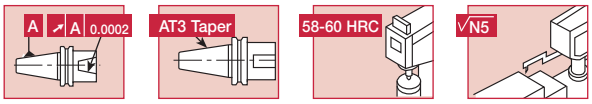

CAT-EM Endmill Holder (Weldon type)

(Unit: inch)

Cat. No.	d	D	D1	L	L1	L2	L3	D2	G
CAT40 EM 3/16X2.500	0.187	0.866	-	2.5	1.75	1.121	-	1.752	5/8-11
CAT40 EM 1/4X2.500	0.25	1	-	2.5	1.75	1.121	-	1.752	5/8-11
CAT40 EM 3/8 X1.750 (1)	0.375	1.5	-	1.75	1	-	-	1.752	5/8-11
CAT40 EM 3/8X2.500	0.375	1.248	-	2.5	1.75	1.121	-	1.752	5/8-11
CAT40 EM 1/2X1.750 (1)	0.5	1.5	-	1.75	1	-	-	1.752	5/8-11
CAT40 EM 1/2X2.625	0.5	1.752	-	2.625	1.875	-	-	1.752	5/8-11
CAT40 EM 5/8X1.750 (1)	0.625	1.5	-	1.75	1	-	-	1.752	5/8-11
CAT40 EM 5/8X3.750	0.625	1.752	-	3.75	3	-	-	1.752	5/8-11
CAT40 EM 3/4X1.750	0.75	1.75	-	1.75	1	-	-	1.752	5/8-11
CAT40 EM 3/4X3.750	0.75	1.752	-	3.75	3	-	-	1.752	5/8-11
CAT40 EM 7/8X4.000	0.875	2.047	-	4	3.25	2.62	-	1.752	5/8-11
CAT40 EM 1X1.750 (1)	1	2	-	1.75	1	-	-	1.752	5/8-11
CAT40 EM 1X4.000	1	2.559	-	4	3.25	2.62	-	1.752	5/8-11
CAT40 EM 1-1/4X2.000 (1)	1.25	2.25	-	2	1.25	-	-	1.752	5/8-11
CAT40 EM 1-1/4X4.250	1.25	2.752	-	4.25	3.5	2.87	-	1.752	5/8-11
CAT40 EM 1-1/2X4.625	1.5	3.15	-	4.625	3.875	3.245	-	1.752	5/8-11
CAT50 EM 1/4 X2.500	0.25	1	-	2.5	1.75	1.12	-	2.752	1-8
CAT50 EM 1/4 X4.500	0.25	1	-	4.5	3.75	3.15	-	2.752	1-8
CAT50 EM 1/4 X6.250	0.25	1	1.969	6.25	5.5	4.87	2.756	2.752	1-8
CAT50 EM 3/8 X2.500	0.375	1.248	-	2.5	1.75	1.12	-	2.752	1-8
CAT50 EM 3/8 X4.500	0.375	1.248	-	4.5	3.75	3.12	-	2.752	1-8
CAT50 EM 3/8X6.500	0.375	1.248	1.969	6.5	5.5	5.12	3.13	2.753	1-8
CAT50 EM 1/2 X2.625	0.5	1.752	-	2.625	1.875	1.245	-	2.752	1-8
CAT50 EM 1/2 X4.625	0.5	1.752	-	4.625	3.875	3.245	-	2.752	1-8
CAT50 EM 1/2X6.625	0.5	1.752	2.205	6.625	5.875	5.245	3.248	2.752	1-8
CAT50 EM 5/8 X3.750	0.625	1.752	-	3.75	3	2.37	-	2.752	1-8
CAT50 EM 5/8X5.750	0.625	1.752	-	5.75	5	4.37	-	2.752	1-8
CAT50 EM 5/8X7.750	0.625	1.752	2.165	7.75	7	6.37	4.39	2.753	1-8
CAT50 EM 3/4 X3.750	0.75	1.772	-	3.75	3	2.37	-	2.752	1-8
CAT50 EM 3/4 X5.750	0.75	1.772	-	5.75	5	3.15	-	2.752	1-8
CAT50 EM 3/4X7.750	0.75	1.772	2.264	7.75	7	6.37	3.15	2.753	1-8
CAT50 EM 7/8 X7.750	0.75	2.047	-	7.75	7	3.15	-	2.752	1-8
CAT50 EM 7/8 X3.750	0.875	2.047	-	3.75	3	2.37	-	2.752	1-8
CAT50 EM 1 X4.000	1	2.559	-	4	3.25	2.62	-	2.753	1-8
CAT50 EM 1 X6.000	1	2.559	-	6	5.25	4.62	-	2.752	1-8
CAT50 EM 1 X8.000	1	2.559	-	8	7.25	4.625	-	2.752	1-8
CAT50 EM 1-1/4X4.000	1.25	2.752	-	4	3.25	-	-	2.752	1-8
CAT50 EM 1-1/4X6.000	1.25	2.752	-	6	5.25	-	-	2.752	1-8
CAT50 EM 1-1/4X8.000	1.25	2.752	-	8	7.25	-	-	2.752	1-8
CAT50 EM 1-1/2X4.000	1.5	3.15	-	4	3.25	2.62	-	2.752	1-8
CAT50 EM 1-1/2X6.000	1.5	3.15	-	6	5.25	4.62	-	2.752	1-8
CAT50 EM 1-1/2X8.000	1.5	3.15	-	8	7.25	6.62	-	2.752	1-8
CAT50 EM 2 X5.625	2	3.74	-	5.625	4.875	4.245	-	2.752	1-8

Add B for coolant through the flange.

Note: Size table is inch.

These tool holders can be used only one vertical machines with an umbrella type ATC.
(They cannot be used with arm type ATC.)

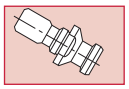

Pull Stud

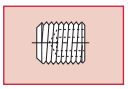

Lock Screw

144 150

Tungaloy Member IMC Group

CAT • TUNGSHRINK • Thermal SHRINK Holder

A CAT-SHRINK

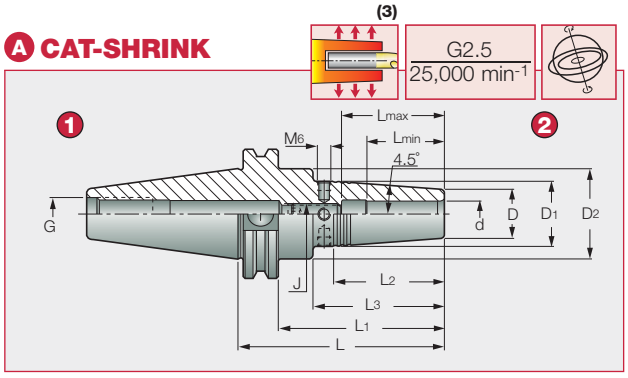

B CAT-SHRINK

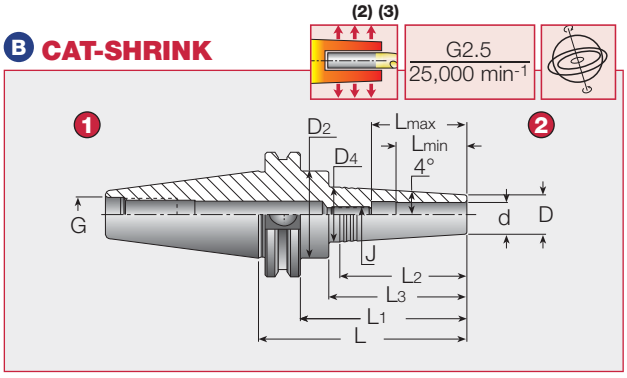

1. CAT Form A
2. SHIRINK
(for carbide and HSS shank)

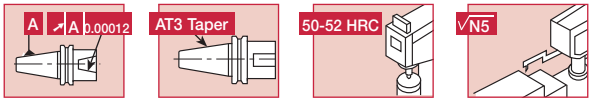

1. CAT Form A
2. SRK
(for carbide shank)

A CAT-SHRINK Thermal SHRINK Holder (SRKIN type, for carbide and HSS shank) (3)

(Unit: inch)

Cat. No.	d	D	D1	D2	L	L1	L2	L3	Lmin	Lmax	J	G	Hex Key
CAT40 SRKIN 1/4X3.500	0.25	0.827	1.063	1.752	3.5	2.75	1.501	2.12	0.98	1.42	M5	5/8-11	0.098
CAT40 SRKIN 5/16X3.500	0.313	0.827	1.063	1.752	3.5	2.75	1.501	2.12	0.98	1.42	M6	5/8-11	0.118
CAT40 SRKIN 3/8 X3.750	0.375	0.945	1.26	1.752	3.75	3	2	2.37	1.22	1.65	M8	5/8-11	0.157
CAT40 SRKIN 7/16X3.750	0.438	0.945	1.26	1.752	3.75	3	2.001	2.37	1.42	1.85	M10	5/8-11	0.197
CAT40 SRKIN 1/2 X3.750	0.5	0.945	1.26	1.752	3.75	3	2.001	2.37	1.42	1.85	M10	5/8-11	0.197
CAT40 SRKIN 5/8 X3.750	0.625	1.063	1.339	1.752	3.75	3	1.751	2.37	1.54	1.97	M12	5/8-11	0.236
CAT40 SRKIN 3/4 X4.000	0.75	1.299	1.654	1.752	4	3.25	2.251	2.62	1.61	2.05	M16	5/8-11	0.315
CAT40 SRKIN 7/8 X4.000	0.875	1.732	2.087	1.752	4	3.25	2.251	2.62	1.61	2.05	M16	5/8-11	0.315
CAT40 SRKIN 1 X4.000	1	1.732	2.087	1.752	4	3.25	2.251	2.62	1.85	2.28	M16	5/8-11	0.315
CAT40 SRKIN 1-1/4 X4.000	1.25	1.732	2.087	1.752	4	3.25	2.251	2.62	1.85	2.28	M16	5/8-11	0.315
CAT50 SRKIN 1/4 X3.500 (1)	0.25	0.827	1.063	2.752	3.5	2.75	1.501	2.12	0.98	1.42	M5	1-8	0.098
CAT50 SRKIN 5/16X3.500 (1)	0.313	0.827	1.063	2.752	3.5	2.7	1.501	2.12	0.98	1.42	M6	1-8	0.118
CAT50 SRKIN 3/8 X3.750 (1)	0.375	0.945	1.26	2.752	3.75	3	2	2.37	1.22	1.65	M8	1-8	0.157
CAT50 SRKIN 7/16X3.750 (1)	0.438	0.945	1.26	2.752	3.75	3	2.001	2.37	1.42	1.85	M10	1-8	0.197
CAT50 SRKIN 1/2 X3.750 (1)	0.5	0.945	1.26	2.752	3.75	3	2.001	2.37	1.42	1.85	M10	1-8	0.197
CAT50 SRKIN 5/8 X3.750 (1)	0.625	1.063	1.339	2.752	3.75	3	1.751	2.62	1.54	1.97	M12	1-8	0.236
CAT50 SRKIN 3/4 X4.000 (1)	0.75	1.299	1.654	2.752	4	3.25	2.251	2.62	1.61	2.05	M16	1-8	0.315
CAT50 SRKIN 7/8 X4.000 (1)	0.875	1.732	2.087	2.752	4	3.25	2.251	2.62	1.61	2.05	M16	1-8	0.315
CAT50 SRKIN 1 X4.000 (1)	1	1.732	2.087	2.752	4	3.25	2.251	2.62	1.85	2.28	M16	1-8	0.315
CAT50 SRKIN 1-1/4 X4.000 (1)	1.25	1.732	2.087	2.752	4	3.25	2.251	2.62	1.85	2.28	M16	1-8	0.315

(1) Balanced to G2.5 20.000 min-1
Use only inductive heating device for SRKIN holders. Add B for coolant through the flange.

B CAT-SHRINK Thermal SHRINK Holder (SRK type, for carbide shank) (2), (3)

(Unit: inch)

Cat. No.	d	D	D1	D2	L	L1	L2	L3	Lmin	Lmax	J	G	Hex Key
CAT40 SRK 1/8 X2.000	0.125	0.394	0.591	1.752	3.38	2.63	1.4	2	0.39	0.63	M6	5/8-11	0.118
CAT40 SRK 1/8 X3.250	0.125	0.394	0.748	1.752	4.63	2.88	2.526	3.25	0.39	0.63	M6	5/8-11	0.118
CAT40 SRK 3/16X2.000	0.188	0.394	0.591	1.752	3.38	2.63	1.4	2	0.59	0.83	M6	5/8-11	0.118
CAT40 SRK 3/16X3.250	0.188	0.394	0.748	1.752	4.963	2.88	2.526	3.25	0.59	0.83	M6	5/8-11	0.118
CAT40 SRK 1/4 X2.000	0.25	0.433	0.63	1.752	3.38	2.63	1.398	2	0.71	0.95	M8	5/8-11	0.157
CAT40 SRK 1/4 X3.250	0.25	0.433	0.787	1.752	4.63	2.88	2.524	3.25	0.71	0.95	M8	5/8-11	0.157
CAT40 SRK 5/16X2.000	0.313	0.551	0.787	1.752	3.38	2.63	1.673	2	0.98	1.22	M10	5/8-11	0.197
CAT40 SRK 5/16X3.250	0.313	0.551	0.906	1.752	4.63	2.88	2.518	3.25	0.98	1.22	M10	5/8-11	0.197
CAT40 SRK 3/8 X2.000	0.375	0.63	0.866	1.752	3.38	2.63	1.669	2	1.18	1.42	M12	5/8-11	0.236
CAT40 SRK 3/8 X3.250	0.375	0.63	0.965	1.752	4.63	2.88	2.373	3.25	1.18	1.42	M12	5/8-11	0.236
CAT40 SRK 7/16X2.000	0.438	0.787	1.024	1.752	3.38	2.63	1.665	2	1.22	1.61	M10	5/8-11	0.197
CAT40 SRK 7/16X3.250	0.438	0.787	1.102	1.752	4.63	2.88	2.228	3.25	1.22	1.61	M10	5/8-11	0.197
CAT40 SRK 1/2 X2.000	0.5	0.787	1.024	1.752	3.38	2.63	1.665	2	1.26	1.65	M10	5/8-11	0.197
CAT40 SRK 1/2 X3.250	0.5	0.787	1.102	1.752	4.63	3.25	2.228	3.25	1.26	1.65	M10	5/8-11	0.197

Note: Size table is inch.

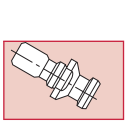
Pull Stud
144

User Guide
131 - 132

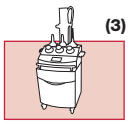
(3)
Induction
136

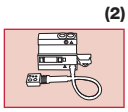
(2)
Thermal
138

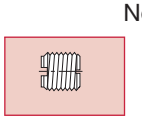
Preset Screw
150

CAT • Shell Mill Holder

A CAT-SEM

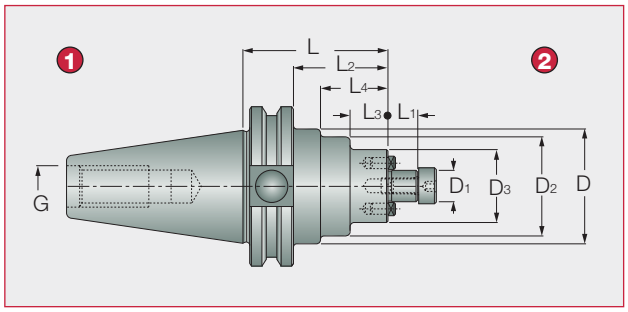

B CAT-SEM-C

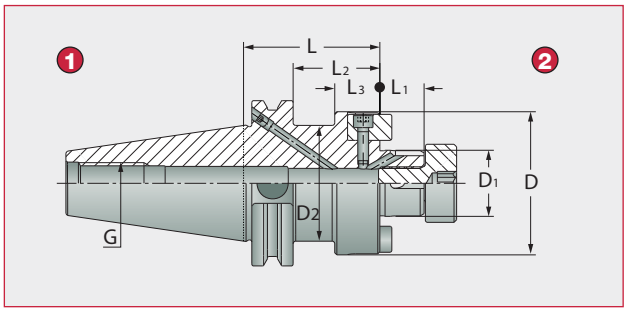

1 CAT Form A
2 ISO 3937

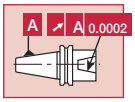

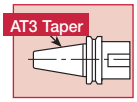

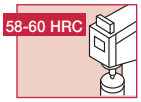

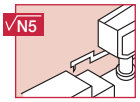

1 CAT Form A/B
2 ISO 3937

A CAT-SEM Shell Mill Holder (2), (3)

(Unit: inch)

Cat. No.	D1	D	D2	D3	L	L1	L2	L3	L4	G
CAT40 SEM 1/2X1.500	0.5	1.75	1.378	-	1.5	0.57	0.75	-	0.102	5/8-11
CAT40 SEM 3/4X1.375	0.75	1.752	-	-	1.375	0.669	0.625	-	-	5/8-11
CAT40 SEM 1X2.062	1	1.752	2.165	-	2.062	0.669	1.312	-	0.682	5/8-11
CAT40 SEM 1-1/4X2.125	1.25	1.752	2.752	-	2.125	0.669	1.375	-	0.745	5/8-11
CAT40 SEM 1-1/2X2.406	1.5	1.752	3.071	-	2.406	0.938	1.656	-	1.026	5/8-11
CAT50 SEM 3/4X1.500	0.75	2.752	1.772	-	1.5	0.669	0.75	-	0.12	1-8
CAT50 SEM 3/4X1.920X8.00	0.75	2.752	1.92	-	8	0.669	7.25	-	6.583	1-8
CAT50 SEM 3/4X3.500	0.75	2.752	1.772	-	3.5	0.669	0.75	-	2.102	1-8
CAT50 SEM 3/4X5.500	0.75	2.752	2.362	1.772	5.5	0.669	4.75	2.48	4.13	1-8
CAT50 SEM 1X2.000	1	2.752	2.165	-	2	0.669	1.25	-	0.62	1-8
CAT50 SEM 1X2.42X12.00	1	2.752	2.42	-	12	0.669	11.25	-	10.583	1-8
CAT50 SEM 1X4.000	1	2.752	2.165	-	4	0.669	3.25	-	0.728	1-8
CAT50 SEM 1X6.000	1	2.752	2.165	-	6	0.669	5.25	-	2.657	1-8
CAT50 SEM 1-1/4X1.500	1.25	1.752	-	-	1.5	0.669	0.75	-	-	1-8
CAT50 SEM 1-1/4X2.92X13.0	1.25	2.752	2.921	-	13	0.669	12.25	-	11.62	1-8
CAT50 SEM 1-1/4X3.500	1.25	2.752	-	-	3.5	0.669	2.75	-	-	1-8
CAT50 SEM1-1/4X4.000	1.25	2.752	-	-	4	0.669	-	-	-	1-8
CAT50 SEM1-1/4X6.000	1.25	2.752	-	-	6	0.669	-	-	-	1-8
CAT50 SEM 1-1/2X2.406	1.5	2.752	3.071	-	2.406	0.938	1.656	-	1.026	1-8
CAT50 SEM 1-1/2X4.000	1.5	2.752	3.071	-	4	0.938	3.25	-	2.62	1-8
CAT50 SEM 1-1/2X6.000	1.5	2.752	3.071	-	6	0.938	5.25	-	4.62	1-8
CAT50 SEM 2X2.406	2	2.752	3.858	-	2.406	0.938	1.656	-	1.026	1-8
CAT50 SEM 2X4.000	2	2.752	3.858	-	4	0.938	3.25	-	2.62	1-8

B CAT-SEM-C Shell Mill Holder with Coolant Hole

(Unit: inch)

Cat. No.	D1	D2	D	L	L2	L1	L3	G
CAT40 SEM 1/2X2.000 C	0.5	1.752	1.475	2	1.25	0.57	-	5/8-11
CAT40 SEM 3/4X 1.375 C	0.75	1.752	-	1.375	0.625	0.669	-	5/8-11
CAT40 SEM 1X 2.062 C	1	1.752	2.165	2.062	1.312	0.669	0.682	5/8-11
CAT40 SEM 1-1/4X2.125 C	1.25	1.752	2.752	2.125	1.375	0.669	0.745	5/8-11
CAT40 SEM 1-1/2X2.406 C	1.5	1.752	3.071	2.406	1.656	0.937	1.026	5/8-11
CAT50 SEM 1/2X 3.500 C	0.5	2.752	1.475	3.5	2.75	0.57	-	1-8
CAT50 SEM 3/4X 2.000 C	0.75	2.752	1.772	2	1.25	0.669	0.62	1-8
CAT50 SEM 3/4X 3.500 C	0.75	2.752	1.772	3.5	2.75	0.669	2.12	1-8
CAT50 SEM 3/4X 5.500 C	0.75	2.752	1.772	5.5	4.75	0.669	4.12	1-8
CAT50 SEM 1X 2.000 C	1	2.752	2.165	2	1.25	0.669	0.62	1-8
CAT50 SEM 1X 4.000 C	1	2.752	2.165	4	3.25	0.669	2.62	1-8
CAT50 SEM 1-1/4X2.000 C	1.25	2.752	-	2	1.25	0.669	0.62	1-8
CAT50 SEM 1-1/4X3.500 C	1.25	2.752	-	3.5	2.75	0.669	2.12	1-8
CAT50 SEM 1-1/2X2.500 C	1.5	2.752	3.071	2.5	1.75	0.937	1.12	1-8
CAT50 SEM 1-1/2X4.000 C	1.5	2.752	3.071	4	3.25	0.937	2.62	1-8

CAT40 = Balanced to G2.5 20,000 min^{-1}
CAT50 = Balanced to G2.5 15,000 min^{-1}

Note: Size table is inch.

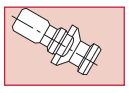

Pull Stud

144

Tungaloy
Member IMC Group

CAT • Face Mill Holder / Drill Chuck Holder / Conversion Adapter

A CAT-FM

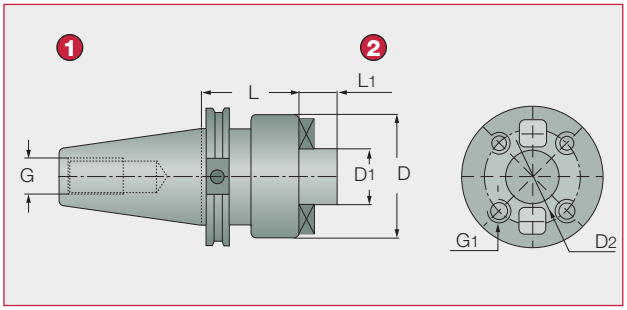

B CAT-DC-J

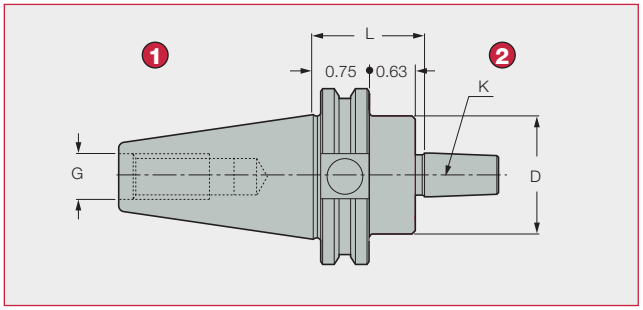

1 CAT Form A
2 DIN6357

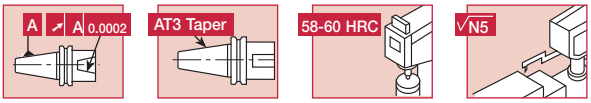

1 CAT Form A
2 DIN238

A CAT-FM Face Mill Holder

(Unit: inch)

Cat. No.	D_1	D	D_2	L	L_1	G	G_1
CAT50 FM 2-1/2X2.875	2.5	4.881	4	2.875	1.125	1-8	5/8-11

B CAT-DC-J Drill Chuck Holder

(Unit: inch)

Cat. No.	K	L	D	G
CAT40 DC J2X1.500	J2	1.5	1.752	5/8-11
CAT40 DC J3X1.500	J3	1.5	1.75	5/8-11
CAT40 DC J4X1.500	J4	1.5	1.752	5/8-11
CAT40 DC J6X1.500	J6	1.5	1.752	5/8-11
CAT40 DC J33X1.500	J33	1.5	1.752	5/8-11
CAT50 DC J3 X1.656	J3	1.656	2.752	1-8
CAT50 DC J4 X1.500	J4	1.5	2.752	1-8
CAT50 DC J5 X1.625	J5	1.625	2.752	1-8
CAT50 DC J6 X1.500	J6	1.5	2.752	1-8
CAT50 DC J33X1.500	J33	1.5	2.752	1-8

C CAT-AD

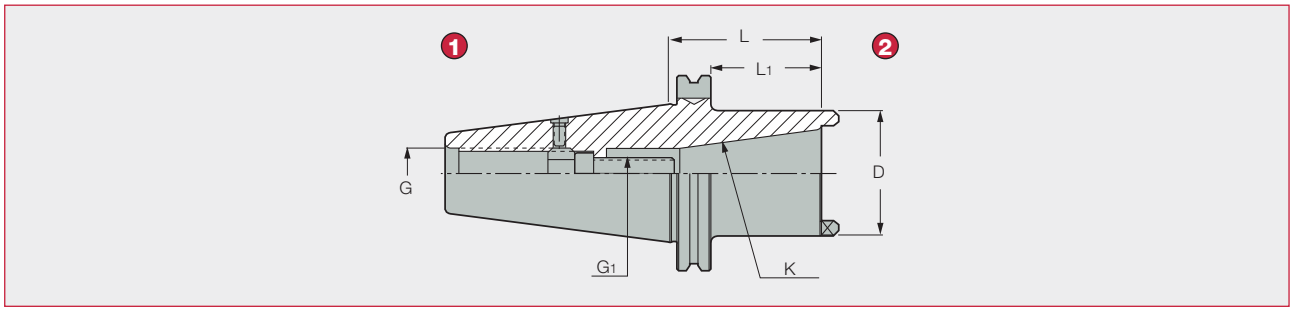

1 CAT Form A
2 ISO

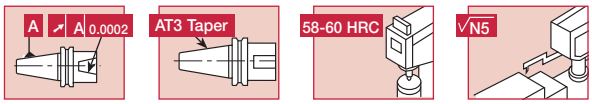

C CAT-AD Conversion Adapter

(Unit: inch)

Cat. No.	K	L	L_1	D	G_1	G
CAT50 AD ISO 40X70	ISO40	2.762	2.012	2.48	5/8-11	1-8

Note: Size table is inch.

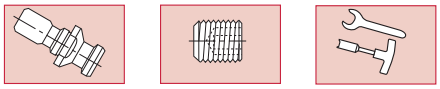

Pull Stud 144
Lock Screw 150
Wrench 151

CAT • Morse Taper Holder / Center Alignment and Cylindical

CAT-MT

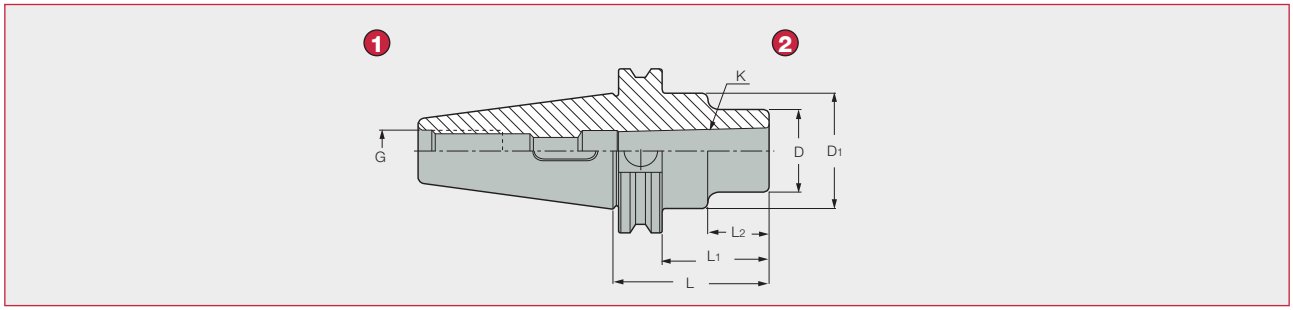

1. CAT Form A
2. DIN6383
   DIN228-2 Form D

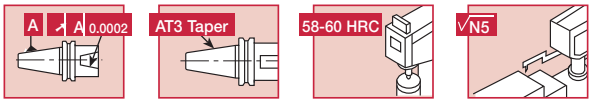

CAT-MT Morse Taper Holder

(Unit: inch)

Cat. No.	K	L	L1	L2	D	D1	G
CAT40 MT 1X1.750	MT1	1.75	1	0.37	1	1.752	5/8-11
CAT40 MT 2X2.250	MT2	2.25	1.5	0.87	1.26	1.752	5/8-11
CAT40 MT 3X2.765	MT3	2.765	2.015	-	-	1.752	5/8-11
CAT40 MT 4X3.625	MT4	3.625	2.875	2.245	2.008	1.752	5/8-11
CAT50 MT 1X1.500	MT1	1.5	0.75	0.12	1	2.752	1-8
CAT50 MT 2X2.000	MT2	2	1.25	0.62	1.26	2.752	1-8
CAT50 MT 3X2.500	MT3	2.5	1.75	1.12	1.575	2.752	1-8
CAT50 MT 4X3.375	MT4	3.375	2.625	1.995	1.969	2.752	1-8
CAT50 MT 5X3.750	MT5	3.75	3	-	-	2.752	1-8

ADJ CAT-ER

G2.5
20,000 min-1

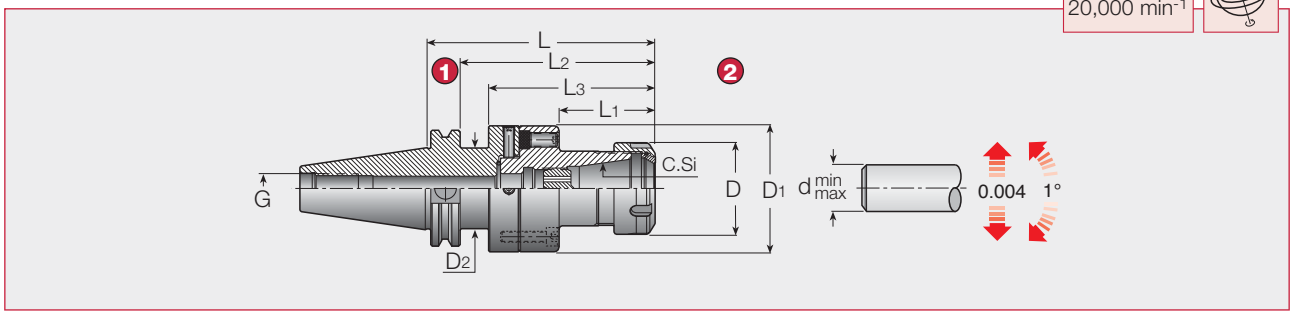

1. CAT Form A
2. DIN6499

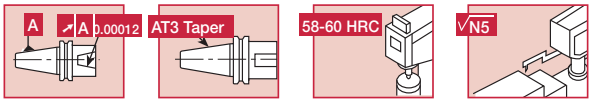

ADJ CAT-ER Center Alignment ER Collet Chuck with Center Alignment

(Unit: inch)

Cat. No.	Range			L	L1	L2	L3	D	D1	D2	G
ADJ CAT40 D2.756 ER32	0.08	-	0.789	4.902	2.067	4.152	3.522	1.969	2.756	1.752	5/8-11
ADJ CAT50 D2.756 ER32	0.08	-	0.789	4.902	2.067	4.152	-	1.969	2.756	-	1-8

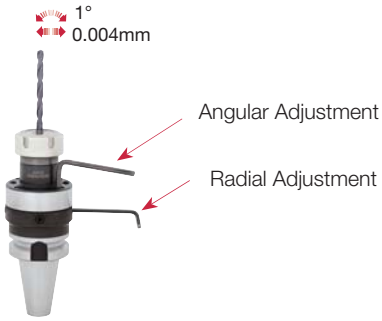

Note: Size table is inch.

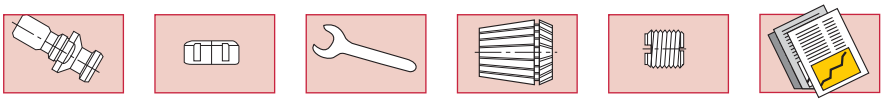

Pull Stud	Nut	Wrench	ER Collet	Preset Screw	User Guide
144	147	148	116 - 119	150	113 - 115

Page

Tungaloy
Member IMC Group

BORE CAT-EM

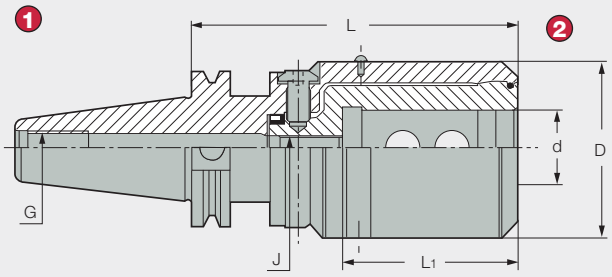

1 CAT Form A/B
2 BORE ISO 9766

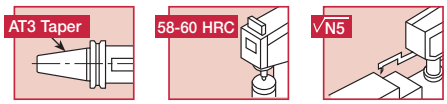

BORE CAT-EM Adjustable Drilling Diameter Holder

(Unit: inch)

Cat. No.	d	D	L	L1	J	G
FITBORE CAT40 EM3/4	0.75	2.835	5.337	2.795	M10	5/8-11
FITBORE CAT40 EM3/4 B	0.75	2.835	5.337	2.795	M10	5/8-11
FITBORE CAT40 EM1	1	2.835	5.337	2.795	M10	5/8-11
FITBORE CAT40 EM1 B	1	2.835	5.337	2.795	M10	5/8-11
FITBORE CAT40 EM1-1/4	1.25	2.835	5.337	2.795	M10	5/8-11
FITBORE CAT40 EM1-1/4 B	1.25	2.835	5.337	2.795	M10	5/8-11
FITBORE CAT40 EM1-1/2	1.5	2.835	5.337	2.795	M10	5/8-11
FITBORE CAT40 EM1-1/2 B	1.5	2.835	5.337	2.795	M10	5/8-11
FITBORE CAT50 EM3/4	0.75	2.835	5.179	2.795	M10	1-8
FITBORE CAT50 EM1	1	2.835	5.179	2.795	M10	1-8
FITBORE CAT50 EM1 B	1	2.835	5.179	2.795	M10	1-8
FITBORE CAT50 EM1-1/4	1.25	2.835	5.179	2.795	M10	1-8
FITBORE CAT50 EM1-1/4 B	1.25	2.835	5.179	2.795	M10	1-8
FITBORE CAT50 EM1-1/2	1.5	2.835	5.179	2.795	M10	1-8
FITBORE CAT50 EM1-1/2 B	1.5	2.835	5.179	2.795	M10	1-8

Add B for coolant through the flange.

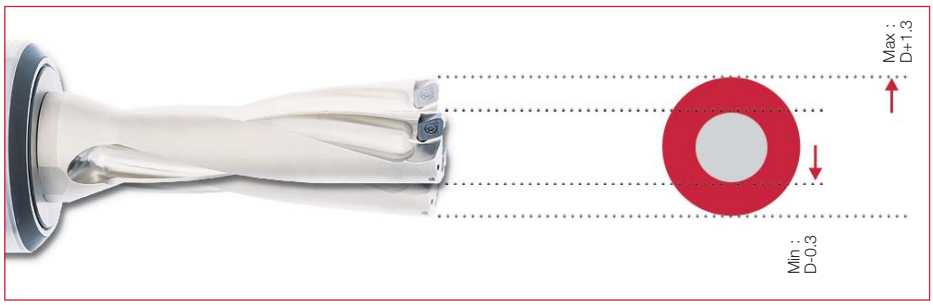

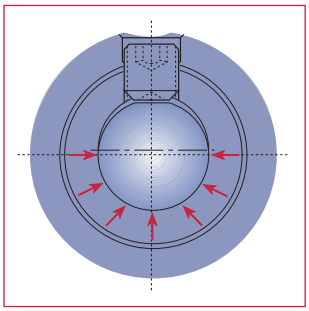

The bore's section is actually made from two shifted circular sections. The clamping screw pushes the drill shank through a narrowed opening, forcing elastic deformation of the holder. Contact is made around more than 180°, providing a high clamping force.

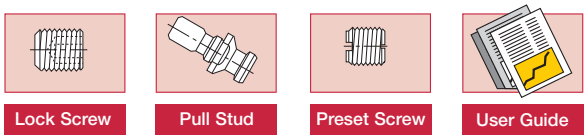

Page ☞ 150 144 150 7

Note: Size table is inch.

CAT • TUNGGTI • Tapping Holder

GTI CAT-ER

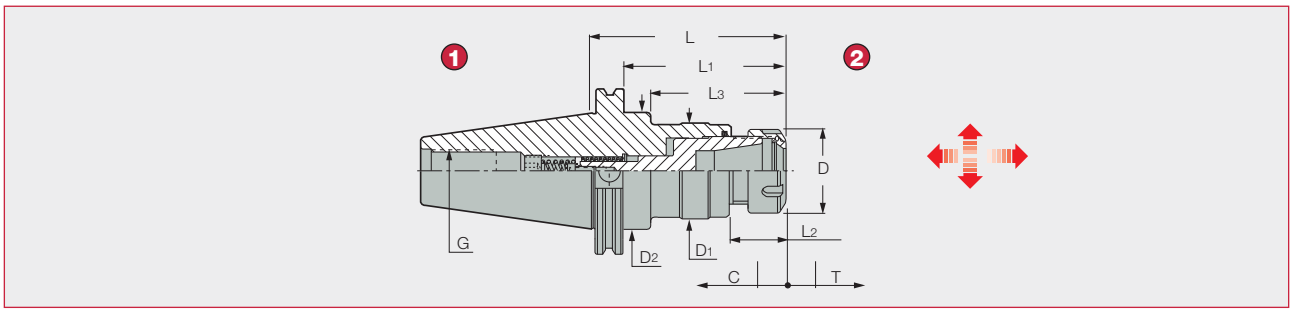

1 CAT Form A
2 DIN6499 GTI

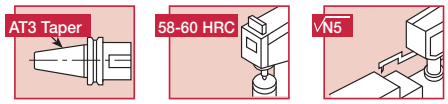

GTI CAT-ER Tapping Holder

(Unit: inch)

Cat. No.	Tap Capacity	G	L	L1	L2	L3	D	D1	D2	T	C
GTI CAT40 ER16	#6 ~ 3/8	5/8-11	3.203	2.453	0.969	1.823	1.102	1.161	1.752	0.32	0.12
GTI CAT40 ER32	1/4 ~ 3/4	5/8-11	4.439	3.689	1.299	3.059	1.969	2.224	1.752	0.36	0.16
GTI CAT40 ER40	1/4 ~ 1-1/8	5/8-11	5.148	4.398	2.008	3.768	2.48	2.224	1.752	0.36	0.16
GTI CAT50 ER16	#6 ~ 3/8	1-8	4.213	3.463	0.969	2.833	1.102	1.161	2.752	0.32	0.12
GTI CAT50 ER32	1/4 ~ 3/4	1-8	4.543	3.793	1.299	3.163	1.969	2.224	2.752	0.36	0.16
GTI CAT50 ER40	1/4 ~ 1-1/8	1-8	5.252	4.502	2.008	3.872	2.48	2.224	2.752	0.36	0.16

CAT • TUNGFIT • Modular System

CAT-CF

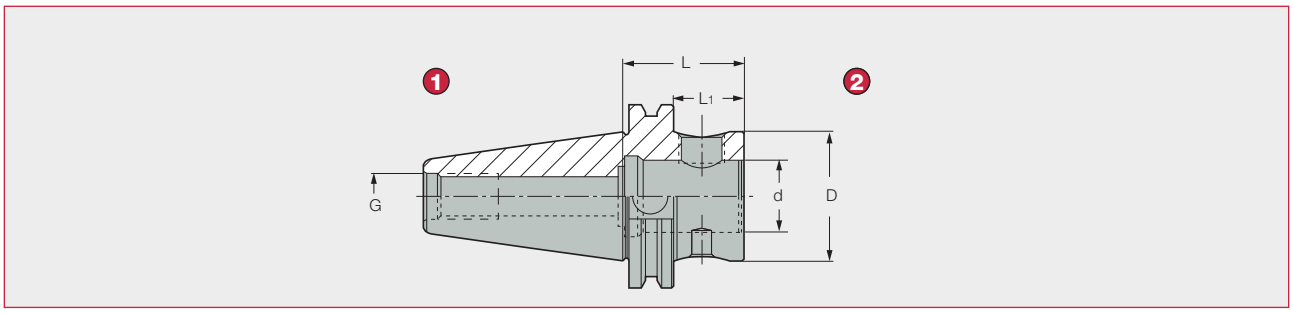

1 CAT Form A/B
2 TungFit

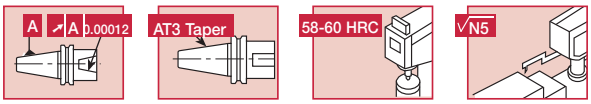

CAT-CF Modular System

(Unit: inch)

Cat. No.	Taper	L	L1	D	d	G
CAT40 CF4-L	40	4	3.252	1.752	CF4	5/8-11
CAT40 CF4-S	40	1.75	1	1.752	CF4	5/8-11
CAT50 CF4-L	50	4	3.252	1.752	CF4	1-8
CAT50 CF4-S	50	1.75	1	1.752	CF4	1-8

Tightening torque: 58.8 N·m
Add B for coolant through the flange.

Note: Size table is inch.

Pull Stud	ER Collet	Wrench	Nut	Lock Screw	User Guide	TungFit
Page 144	116 - 119	148	147	150	113 - 115, 7	112

Tungaloy
Member IMC Group

CAT • TUNGCLICK • Quick Change Holder

CAT-ER-CLICK

G2.5
20,000 min-1

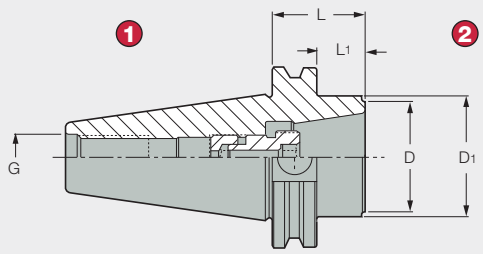

1 **CAT Form A**
2 **DIN6499 ER-CLICK**

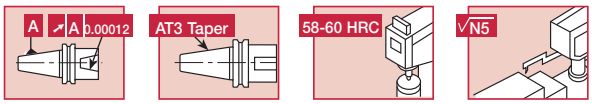

CAT-ER-CLICK Quick Change System

(Unit: inch)

Cat. No.	L	L1	D	D1	G
CAT40 ER32 CLICK-IN	0.789	-	1.614	-	5/8X11
CAT50 ER32 CLICK-IN	0.789	-	1.614	-	1-8
CAT50 ER32 CLICK-IN M	1.419	0.669	1.614	2.752	1-8

⚠ Tightening torque: 235 N·m

CAT • TUNGFLEX • Indexable Modular System

CAT-ODP

G2.5
20,000 min-1

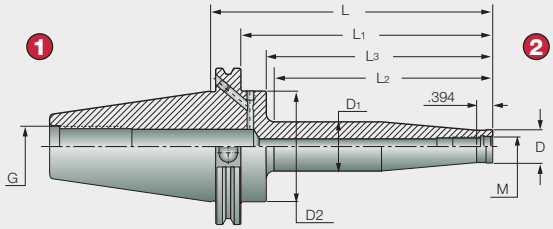

1 **CAT Form**
2 **TungFlex**

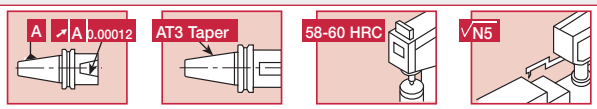

CAT-ODP Indexable Modular System

(Unit: inch)

Cat. No.	M	D	D1	D2	L	L1	L2	L3	G
CAT40 ODP M 6X2.000	M6	0.38	0.511	-	2	0.935	0.935	-	5/8-11
CAT40 ODP M 6X4.000	M6	0.38	0.725	-	4	2.935	2.935	-	5/8-11
CAT40 ODP M 8X2.000	M8	0.51	0.58	-	2	0.944	0.944	-	5/8-11
CAT40 ODP M 8X4.000	M8	0.51	0.79	-	4	2.913	2.913	-	5/8-11
CAT40 ODP M10X2.000	M10	0.71	0.78	-	2	1.062	1.062	-	5/8-11
CAT40 ODP M10X4.000	M10	0.71	0.99	-	4	3.149	3.149	-	5/8-11
CAT40 ODP M12X4.000	M12	0.83	1.11	-	4	3.149	3.149	-	5/8-11
CAT40 ODP M12X6.000	M12	0.83	1.31	-	6	5.118	5.118	-	5/8-11
CAT40 ODP M16X4.000	M16	1.14	1.42	-	4	3.149	3.149	-	5/8-11
CAT40 ODP M16X6.000	M16	1.14	1.62	-	6	5.118	5.118	-	5/8-11
CAT50 ODP M 8X5.000 (1)	M8	0.516	0.906	2.752	5	4.232	3.405	3.602	1-8
CAT50 ODP M10X3.000 (1)	M10	0.709	0.693	2.752	3	2.232	1.405	1.602	1-8
CAT50 ODP M10X7.000 (1)	M10	0.709	1.102	2.752	7	6.232	5.405	5.602	1-8
CAT50 ODP M12X3.000 (1)	M12	0.827	0.811	2.752	3	2.232	1.405	1.602	1-8
CAT50 ODP M12X7.000 (1)	M12	0.827	1.22	2.752	7	6.232	5.405	5.602	1-8
CAT50 ODP M16X3.000 (1)	M16	1.142	1.126	2.752	3	2.232	1.405	1.602	1-8
CAT50 ODP M16X7.000 (1)	M16	1.142	1.339	2.752	7	6.232	5.405	5.602	1-8

(1) Balanced to G2.5 12,000 min-1

Note: Size table is inch.

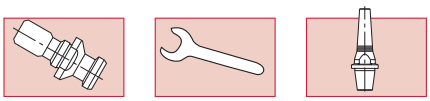

Page

Pull Stud	Wrench	ER 32 SRF
144	148	140

DIN2080 • Shank Standaed

DIN2080

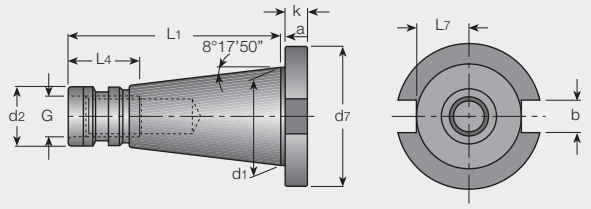

(Unit: mm)

Shank	a±0.2	b (H12)	d1	d2	G	d7	K±0.15
SK 30	1.6	16.1	31.75	17.4	M12	50	8
SK 40	1.6	16.1	44.45	25.3	M16	63	10
SK 50	3.2	25.7	69.85	39.6	M24	97.5	12

(Unit: mm)

Shank	L1	L4	L7max	Taper AT3
SK 30	68.4	24	16.2	0.002
SK 40	93.4	32	22.5	0.003
SK 50	126.8	47	35.3	0.004

Collet Chuck Holder

DIN2080-ER

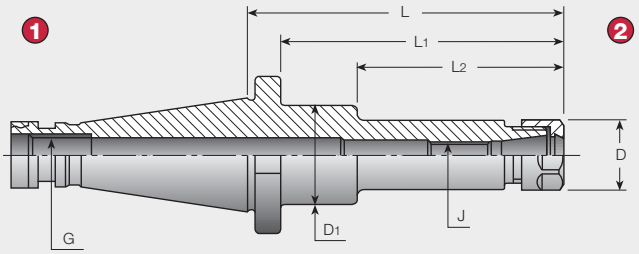

1 DIN2080
2 DIN6499

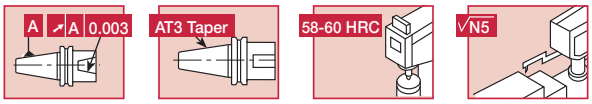

DIN2080-ER ER Collet Chuck Holder

(Unit: mm)

Cat. No.	Range	L	L1	L2	D	D1	J	G
DIN2080 30 ER16X 75	0.5-10	75	65.4	-	28	-	M10	M12
DIN2080 40 ER16X 63	0.5-10	63	51.4	-	28	-	M12	M16
DIN2080 40 ER16X100	0.5-10	100	88.4	-	28	-	M12	M16
DIN2080 40 ER16X160	0.5-10	160	148.4	85	28	40	M12	M16
DIN2080 40 ER20X 63	1-13	63	51.4	-	34	-	M12	M16
DIN2080 40 ER20X100	1-13	100	88.4	-	34	-	M12	M16
DIN2080 50 ER16X100	0.5-10	100	84.8	-	28	-	M12	M24
DIN2080 50 ER16X160	0.5-10	160	144.8	95	28	40	M12	M24
DIN2080 50 ER20X100	1-13	100	84.8	-	34	-	M16	M24
DIN2080 50 ER20X160	1-13	160	144.8	-	34	-	M12	M24

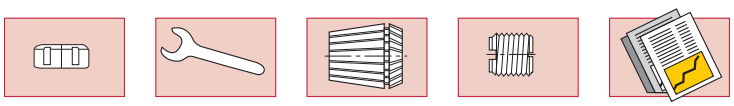

	Nut	Wrench	ER Collet	Preset Screw	User Guide
Page	147	148	116 - 119	149	113 - 115

Tungaloy
Member IMC Group

DIN2080 • Collet Chuck Holder / Side Lock Chuck Holder

DIN2080-ER

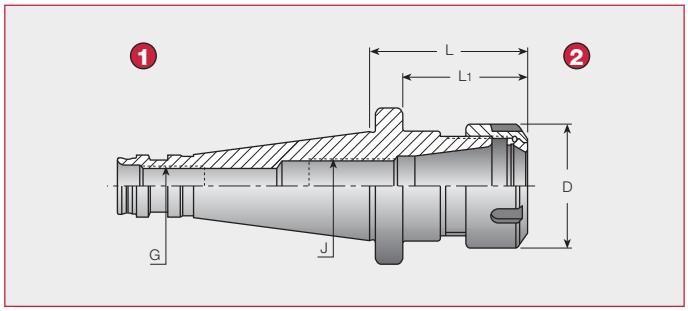

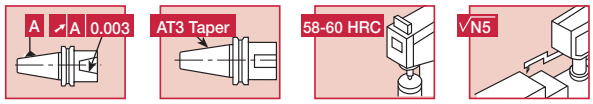

1 **DIN2080**
2 **DIN6499**

DIN2080-ER ER Collet Chuck Holder

(Unit: mm)

Cat. No.	Range	L	L_1	D	J	G
DIN2080 30 ER32X 55	2-20	55	45.4	50	M18X1.5	M12
DIN2080 30 ER40X 83	3-26	83	69.4	63	M22X1.5	M12
DIN2080 40 ER25X 50	1-16	50	38.4	42	M16X1.5	M16
DIN2080 40 ER32X 50	2-20	50	38.4	50	M22X1.5	M16
DIN2080 40 ER40X 55	3-26	55	43.4	63	M22X1.5	M16
DIN2080 40 ER50X 80	10-34	80	68.4	78	M22X1.5	M24
DIN2080 50 ER40X 58	3-26	58	42.8	63	M28X1.5	M24
DIN2080 50 ER50X 63	10-34	63	47.8	78	M36X1.5	M24

DIN2080-EM

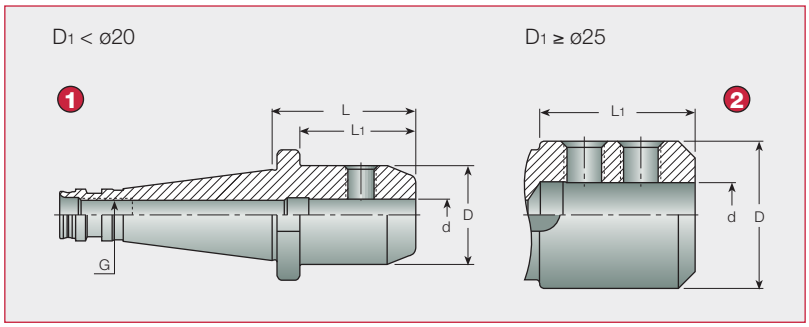

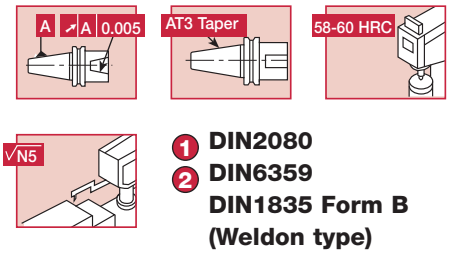

1 **DIN2080**
2 **DIN6359**
DIN1835 Form B
(Weldon type)

DIN2080-EM Endmill Chuck Holder (Weldon type)

(Unit: mm)

Cat. No.	d	D	L	L_1	G
DIN2080 30 EM 6X 40	6	25	40	30.4	M12
DIN2080 30 EM 8X 40	8	28	40	30.4	M12
DIN2080 30 EM10X 40	10	35	40	30.4	M12
DIN2080 30 EM12X 40	12	42	40	30.4	M12
DIN2080 30 EM16X 50	16	48	50	40.4	M12
DIN2080 30 EM20X 63	20	52	63	53.4	M12
DIN2080 40 EM 6X 50	6	25	50	38.4	M16
DIN2080 40 EM 8X 50	8	28	50	38.4	M16
DIN2080 40 EM10X 50	10	35	50	38.4	M16
DIN2080 40 EM12X 50	12	42	50	38.4	M16
DIN2080 40 EM16X 63	16	48	63	51.4	M16
DIN2080 40 EM20X 63	20	52	63	51.4	M16
DIN2080 40 EM25X 80	25	65	80	68.4	M16
DIN2080 40 EM32X 80	32	71	80	68.4	M16
DIN2080 50 EM 6X 63	6	25	63	47.8	M24
DIN2080 50 EM 8X 63	8	28	63	47.8	M24
DIN2080 50 EM10X 63	10	35	63	47.8	M24
DIN2080 50 EM12X 63	12	42	63	47.8	M24
DIN2080 50 EM16X 63	16	48	63	47.8	M24
DIN2080 50 EM20X 63	20	52	63	47.8	M24
DIN2080 50 EM25X 80	25	65	80	64.8	M24
DIN2080 50 EM32X 80	32	72	80	64.8	M24
DIN2080 50 EM40X 90	40	90	90	74.8	M24
DIN2080 50 EM50X100	50	100	100	84.8	M24

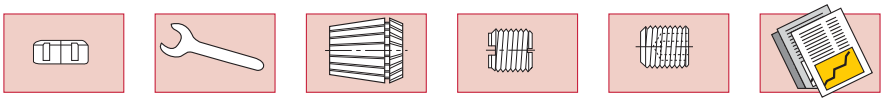

	Nut	Wrench	ER Collet	Preset Screw	Lock Screw	User Guide
Page	147	148	116 - 119	149	150	113 - 115

DIN2080 • Shell Mill Holder / Face Mill Holder

DIN2080-SEM

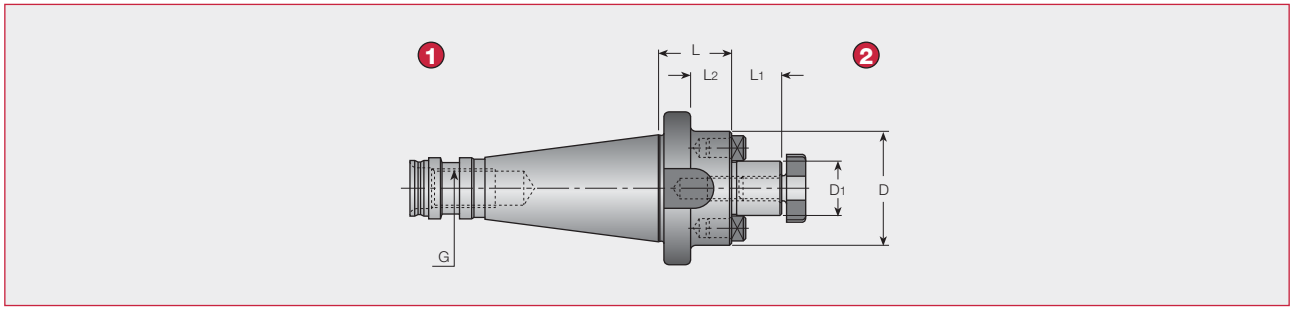

1 DIN2080
2 DIN3937

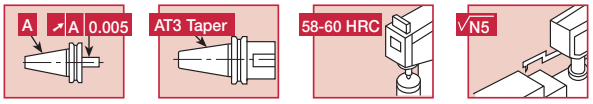

DIN2080-SEM Shell Mill Holder - Metric

(Unit: mm)

Cat. No.	D_1	L_1	L	L_2	D	G
DIN2080 30 SEM 16X 28	16	17	28	18.4	38	M12
DIN2080 30 SEM 22X 28	22	19	28	18.4	47	M12
DIN2080 30 SEM 27X 32	27	21	32	22.4	58	M12
DIN2080 30 SEM 32X 32	32	24	32	22.4	66	M12
DIN2080 40 SEM 16X 28	16	17	28	16.4	38	M16
DIN2080 40 SEM 22X 27	22	19	27	15.4	47	M16
DIN2080 40 SEM 27X 26	27	21	26	14.4	58	M16
DIN2080 40 SEM 32X 23	32	24	23	11.4	66	M16
DIN2080 40 SEM 40X 34	40	27	34	22.4	82	M16
DIN2080 50 SEM 16X 38	16	17	38	22.8	38	M24
DIN2080 50 SEM 22X 38	22	19	38	22.8	47	M24
DIN2080 50 SEM 27X 38	27	21	38	22.8	58	M24
DIN2080 50 SEM 32X 36	32	24	36	20.8	66	M24
DIN2080 50 SEM 40X 40	40	27	40	24.8	82	M24

DIN2080-FM

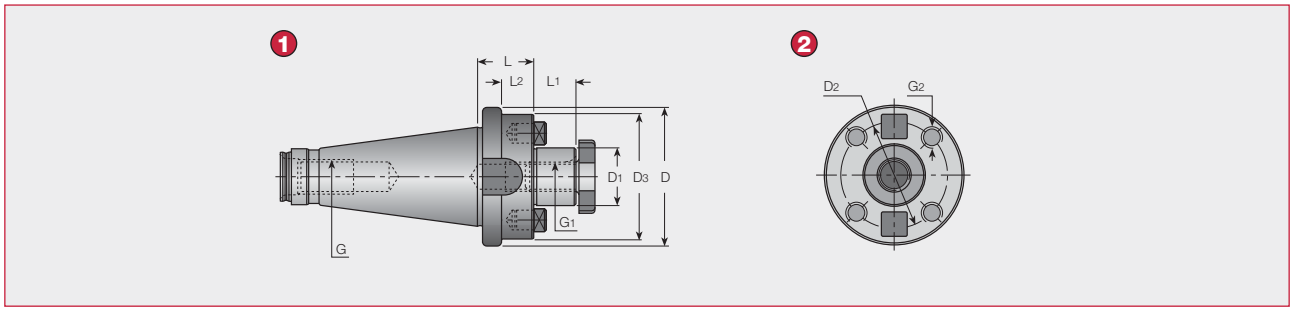

1 DIN2080
2 DIN6357

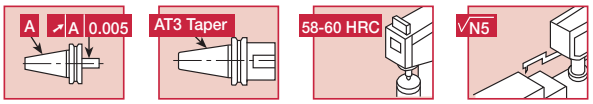

DIN2080-FM Face Mill Holder - Metric

(Unit: mm)

Cat. No.	D_1	L_1	L	L_2	D	D_2	D_3	G_1	G_2	G
DIN2080 40 FM 40	40	27	20.0	-	88.0	66.7	-	M20	M12	M16
DIN2080 50 FM 40	40	27	36.0	20.8	97.5	66.7	88	M20	M12	M24
DIN2080 50 FM 60	60	40	35.8	-	128.0	101.6	-	-	M16	M24

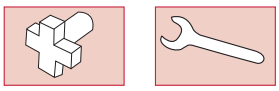

Lock Screw | Wrench

Page 150 151

Tungaloy
Member IMC Group

DIN2080 • Shell Mill Holder / Drill Chuck Arbor

DIN2080-SEMC

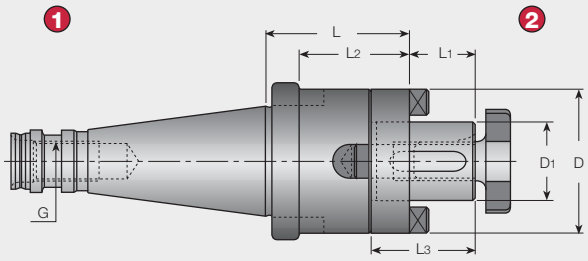

1 DIN2080
2 DIN6358

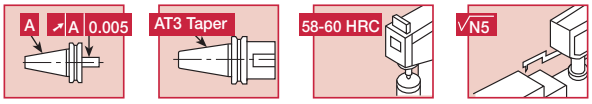

DIN2080-SEMC COMBI – Shell Mill Holder (Combination type)

(Unit: mm)

Cat. No.	D_1	L_1	L	L_2	L_3	D	G
DIN2080 30 SEMC 16X 35	16	17	35	25.4	27	32	M12
DIN2080 30 SEMC 22X 35	22	19	35	25.4	31	40	M12
DIN2080 30 SEMC 27X 35	27	21	35	25.4	33	48	M12
DIN2080 30 SEMC 32X 50	32	24	50	40.4	38	58	M12
DIN2080 40 SEMC 16X 52	16	17	52	40.4	27	32	M16
DIN2080 40 SEMC 22X 52	22	19	52	40.4	31	40	M16
DIN2080 40 SEMC 27X 52	27	21	52	40.4	33	48	M16
DIN2080 40 SEMC 32X 52	32	24	52	40.4	38	58	M16
DIN2080 40 SEMC 40X 52	40	27	52	40.4	41	70	M16
DIN2080 50 SEMC 16X 55	16	17	55	39.8	27	32	M24
DIN2080 50 SEMC 22X 55	22	19	55	39.8	31	40	M24
DIN2080 50 SEMC 27X 55	27	21	55	39.8	33	48	M24
DIN2080 50 SEMC 32X 55	32	24	55	39.8	38	58	M24
DIN2080 50 SEMC 40X 55	40	27	55	39.8	41	70	M24
DIN2080 50 SEMC 50X 55	50	30	55	39.8	46	90	M24

DIN2080-DC

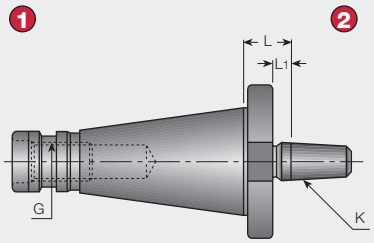

1 DIN2080
2 DIN238

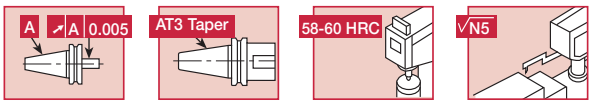

DIN2080-DC Drill Chuck Holder

(Unit: mm)

Cat. No.	K	L	L_1	G
DIN2080 30 DC B16X 20	B16	20	5.4	M12
DIN2080 40 DC B16X 22	B16	22	10.4	M16
DIN2080 40 DC B18X 25	B18	25	13.4	M16
DIN2080 50 DC B16X 25	B16	25	9.8	M24
DIN2080 50 DC B18X 25	B18	25	9.8	M24

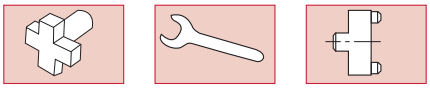

Lock Screw	Wrench	Driving Ring
150	151	151

Page

DIN2080 • Conversion Adapter / Morse Taper Holder

DIN2080-AD/ADO

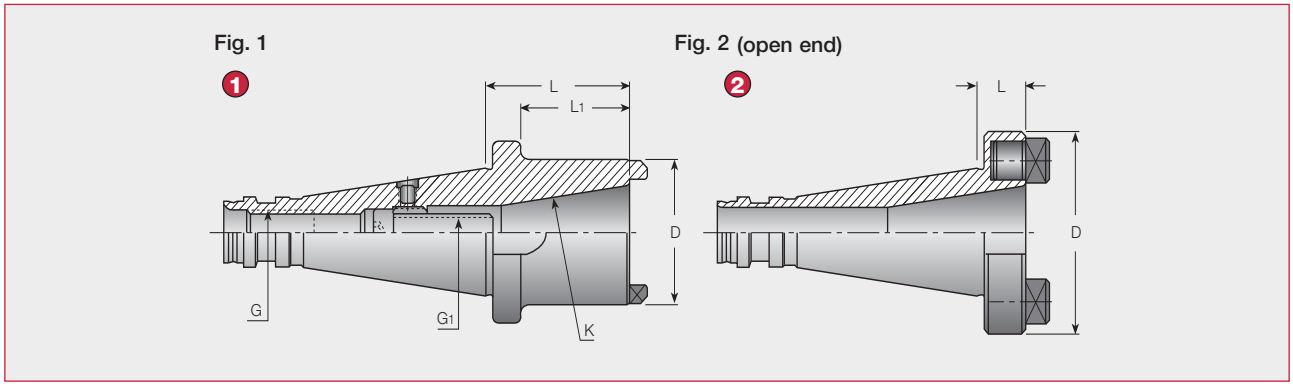

1 **DIN2080**
2 **DIN2080**
DIN69871/A
BT MAS 403
R-8

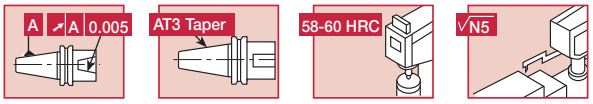

DIN2080-AD/ADO Adapter

(Unit: mm)

Cat. No.	K	L	L_1	D	G_1	G	Fig
DIN2080 40 AD 30	DIN2080	50.0	38.4	50.0	M12	M16	1
DIN2080 40 ADO 30	DIN2080	15.8	-	70.0	-	-	2
DIN2080 40 AD R-8	R-8	40.1	27.0	54.0	-	-	2
DIN2080 50 AD 30	DIN2080	50.0	34.8	50.0	M12	M24	1
DIN2080 50 AD 40	DIN2080	50.0	34.8	63.0	M16	M24	1
DIN2080 50 ADO 30	DIN2080	16.0	-	97.5	-	-	2
DIN2080 50 ADO 40	DIN2080	20.0	-	97.5	-	-	2
DIN2080 50 AD BT/SK 40	BT MAS-403, DIN69871/A	50.0	34.8	66.0	M16	M24	1
DIN2080 50 AD R-8	R-8	21.2	4.0	50.0	-	-	2

DIN2080-MT-DRW

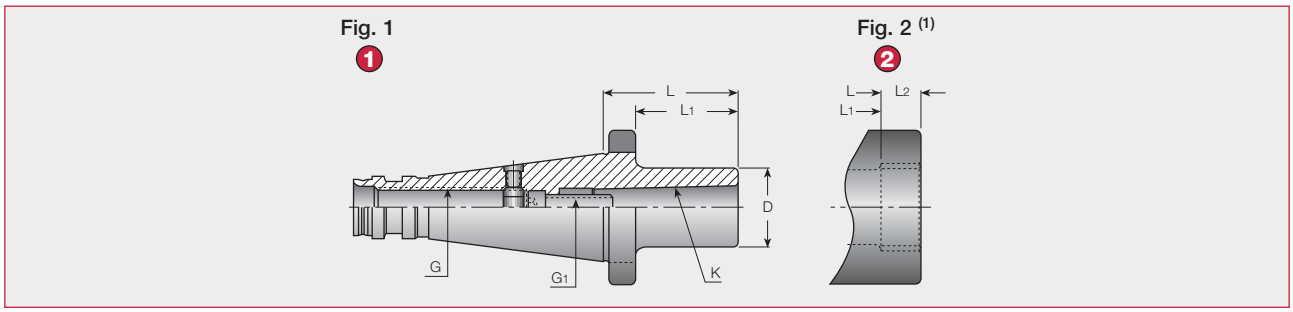

1 **DIN2080**
2 **DIN6364**
DIN228-2 Form B

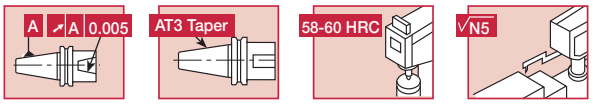

DIN2080-MT-DRW Morse Taper Draw Bar type Holder

(Unit: mm)

Cat. No.	K	L	L_1	L_2	D	G_1	G	Fig
DIN2080 40 MT1 DRW	MT1	50	38.4	-	25	M6	M16	1
DIN2080 40 MT2 DRW	MT2	50	38.4	-	32	M10	M16	1
DIN2080 40 MT3 DRW	MT3	65	53.4	-	40	M12	M16	1
DIN2080 40 MT4 DRW	MT4	95	-	15	63	M16	M16	2
DIN2080 50 MT1 DRW	MT1	60	44.8	-	25	M6	M24	1
DIN2080 50 MT2 DRW	MT2	60	44.8	-	32	M10	M24	1
DIN2080 50 MT3 DRW	MT3	65	49.8	-	40	M12	M24	1
DIN2080 50 MT4 DRW	MT4	65	49.8	15	63	M16	M24	2
DIN2080 50 MT5 DRW	MT5	100	84.4	18	78	M20	M24	2

(1) DIN2201.

Tungaloy
Member IMC Group

DIN2080 • Morse Taper Holder

DIN2080-MT

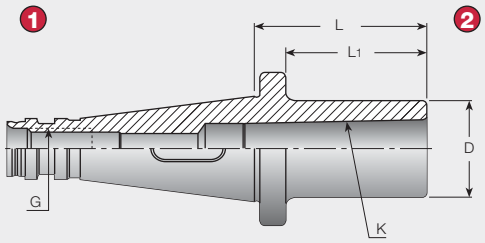

1 **DIN2080**
2 **DIN6383**
DIN228-2 Form D

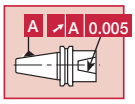

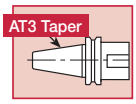

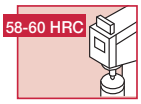

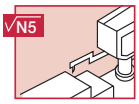

DIN2080-MT Morse Taper Holder

(Unit: mm)

Cat. No.	K	L	L_1	D	G
DIN2080 30 MT1X 50	MT1	50	40.4	25.0	M12
DIN2080 30 MT2X 50	MT2	50	40.4	32.0	M12
DIN2080 30 MT3X 70	MT3	70	60.4	40.0	M12
DIN2080 40 MT1X 50	MT1	50	38.4	25.0	M16
DIN2080 40 MT2X 50	MT2	50	38.4	32.0	M16
DIN2080 40 MT3X 65	MT3	65	53.4	40.0	M16
DIN2080 40 MT4X 95	MT4	95	83.4	48.0	M16
DIN2080 50 MT1X 45	MT1	45	29.8	25.0	M24
DIN2080 50 MT2X 60	MT2	60	44.8	32.0	M24
DIN2080 50 MT3X 65	MT3	65	49.8	40.0	M24
DIN2080 50 MT4X 70	MT4	70	54.8	48.0	M24
DIN2080 50 MT5X105	MT5	105	89.2	63.5	M24

DIN2080-CP

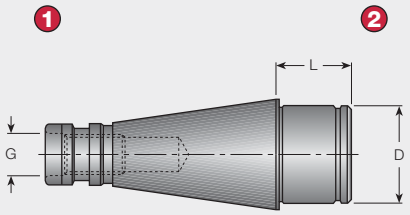

1 **DIN2080**
2 **DIN6356**

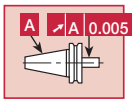

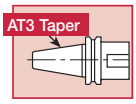

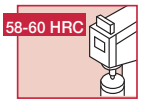

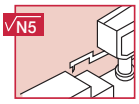

DIN2080-CP Centering Plug

(Unit: mm)

Cat. No.	L	D	G
DIN2080 40 CP 40	29	40	M16
DIN2080 50 CP 40	29	40	M24
DIN2080 50 CP 50	29	50	M24
DIN2080 50 CP 60	39	60	M24

R-8 ER

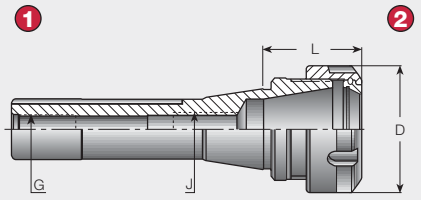

1 **R-8 Bridgeport**
2 **DIN6499**

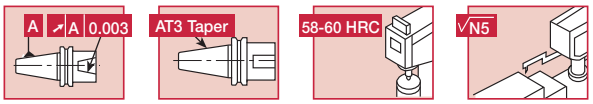

R-8-ER ER Collet Chuck Holder

(Unit: mm)

Cat. No.	Range	L	D	J	G
R-8 ER16X38	0.5-10	38	28	M10	7/16-20
R-8 ER32X40	2-20	40	50	M12	7/16-20
R-8 ER40X72	3-26	72	63	M12	7/16-20

R-8 SEM

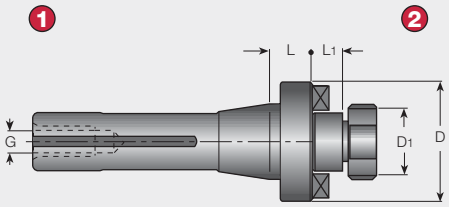

1 **R-8 Bridgeport**
2 **ISO 3937**

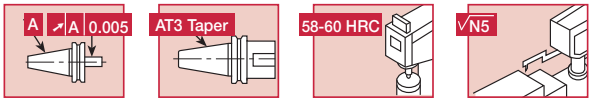

R-8-SEM Shell mill Holder - Metric

(Unit: mm)

Cat. No.	D_1	L	L_1	D	G
R-8 SEM 16X26	16	26	17	38	7/16-20
R-8 SEM 22X26	22	26	19	47	7/16-20
R-8 SEM 27X22	27	22	21	58	7/16-20
R-8 SEM 32X25	32	25	24	66	7/16-20

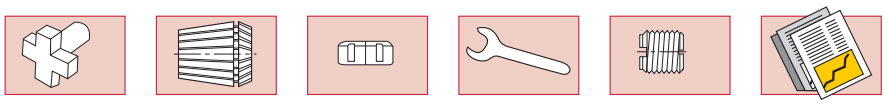

	Lock Screw	ER Collet	Nut	Wrench	Preset Screw	User Guide
Page	150	116 - 119	147	148, 151	149	131 -115

Tungaloy
Member IMC Group

R-8 Bridgeport • Morse Taper Holder

R-8 MT

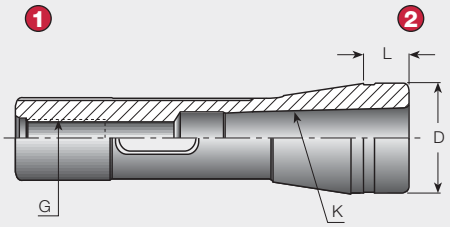

1. **R-8 Bridgeport**
2. **DIN6383**
   DIN228-2 Form D

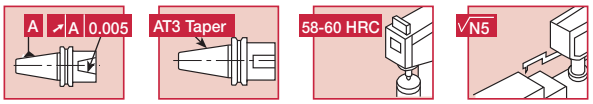

R-8 MT Morse Taper Holder

(Unit: mm)

Cat. No.	K	L	D	G
R-8 MT 2	MT2	13.4	31.75	7/16-20
R-8 MT 3	MT3	51.4	31.75	

R-8 DC-B

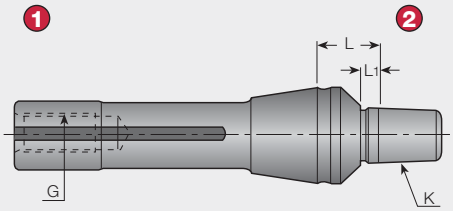

1. **R-8 Bridgeport**
2. **DIN238**

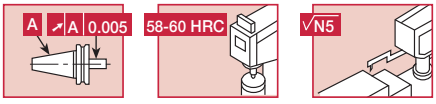

R-8 DC Drill Chuck Holder

(Unit: mm)

Cat. No.	K	L	L_1	G
R-8-DC B12X21	B12	21	6.5	7/16-20
R-8-DC B16X21	B16	21	7.4	7/16-20

Straight Shank • Collet Chuck Holder

ST-ER-M / MF

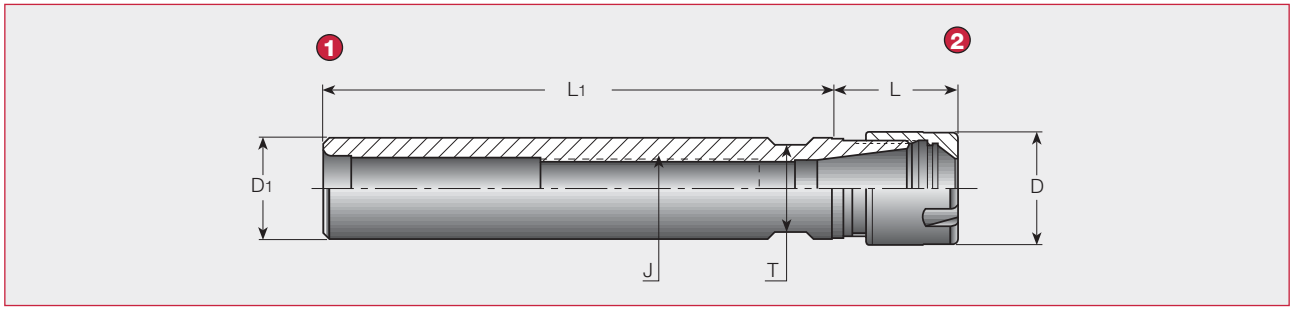

1 **Straight Shank**
2 **DIN6499**

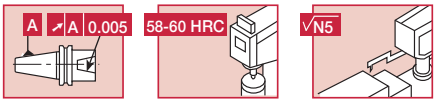

ST-ER-M/MF Mini ER Collet Chuck Holder

(Unit: mm)

Cat. No.	Range	L1	L	J	D	D1	T
ST 12X 80 ER11 M	0.5-7	80	26.5	-	16	12	11
ST 16X 50 ER11 MF	0.5-7	50	18.5	M8	16	16	13
ST 16X100 ER11 M	0.5-7	100	18.5	M8	16	16	13
ST 16X150 ER11 M	0.5-7	150	18.5	M8	16	16	13
ST 12X 80 ER16 M	0.5-10	80	36.5		22	12	17
ST 20X100 ER16 M	0.5-10	100	25.0	M12	22	20	17
ST 20X150 ER16 M	0.5-10	150	25.0	M12	22	20	17
ST 20X100 ER20 M	1-13	100	40.0	M12	28	20	21
ST 20X150 ER20 M	1-13	150	40.0	M12	28	20	21

F indicates a flat on the shank.

ST-ER

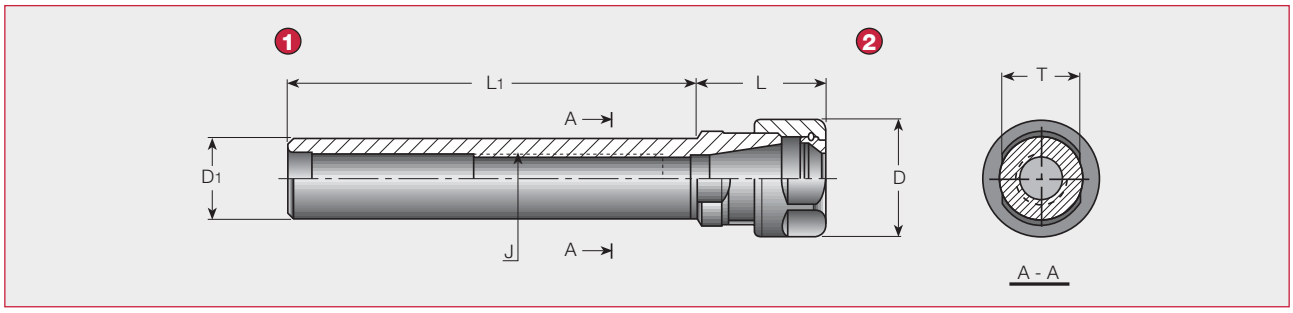

1 **Straight Shank**
2 **DIN6499**

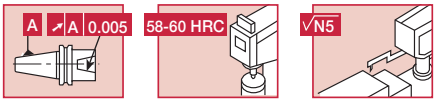

ST-ER ER Collet Chuck Holder

(Unit: mm)

Cat. No.	Range	L1	L	J	D	D1	T
ST 16X 50 ER11F	0.5-7	50	18.5	M8	19	16	13
ST 20X 50 ER11F	0.5-7	50	18.5	M10	19	20	17
ST 20X100 ER11	0.5-7	100	18.5	M10	19	20	17
ST 20X150 ER11	0.5-7	150	18.5	M10	19	20	17
ST 20X 50 ER16F	0.5-10	50	32.3	M12	28	20	19
ST 20X100 ER16	0.5-10	100	30.0	M12	28	20	19
ST 20X150 ER16	0.5-10	150	30.0	M12	28	20	19
ST 20X 50 ER20F	1-13	50	42.5	M12	34	20	22
ST 25X100 ER20	1-13	100	36.0	M16	34	25	22
ST 25X100 ER20F	1-13	100	36.0	M16	34	25	22
ST 25X150 ER20	1-13	150	36.0	M16	34	25	22

F indicates a flat on the shank.

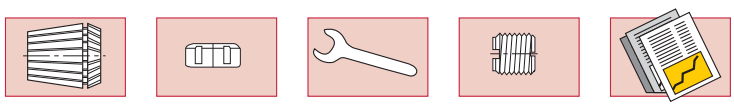

ER Collet	Nut	Wrench	Preset Screw	User Guide
116 - 119	147	148	149	113 - 115

Page

Tungaloy
Member IMC Group

Straight Shank • Collet Chuck Holder

A ST-ER

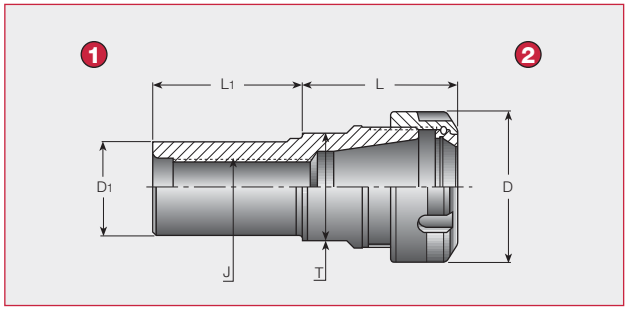

B ST-ER-MF

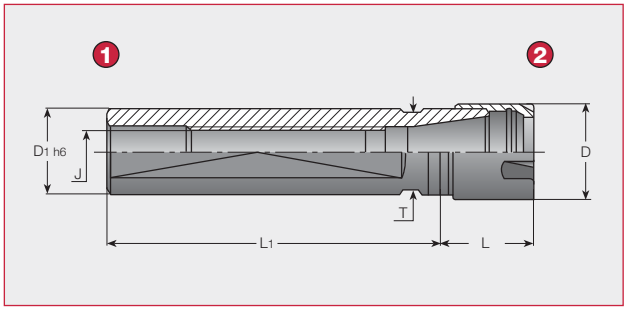

1 **Straight Shank**
2 **DIN6499**

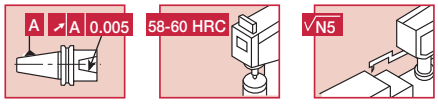

A ST-ER ER Collet Chuck Holder

(Unit: mm)

Cat. No.	Range	L1	L	J	D	D1	T
ST 20X 50 ER25 F	1-16	50	46	M12	42	20	28
ST 20X100 ER25	1-16	100	46	M12	42	20	28
ST 20X 50 ER32 F	2-20	50	54	M12	50	20	36
ST 20X100 ER32	2-20	100	54	M12	50	20	36
ST 25X 50 ER25 F	1-16	50	46	M16	42	25	28
ST 25X100 ER25	1-16	100	46	M16	42	25	28
ST 25X 50 ER32 F	2-20	50	52	M16x2	50	25	36
ST 25X 50 ER40 F	3-26	50	60	M16x2	63	25	45
ST 30X 50 ER32 F	2-20	50	52	M18x1.5	50	30	36
ST 30X 50 ER40 F	3-26	50	60	M18x1.5	63	30	45
ST 32X 50 ER32 F	2-20	50	52	M18x1.5	50	32	36
ST 32X150 ER32	2-20	150	52	M18x1.5	50	32	36
ST 32X 50 ER40 F	3-26	50	60	M18x1.5	63	32	45
ST 40X 75 ER32 F	2-20	75	46	M22x1.5	50	40	44
ST 40X 75 ER40 F	3-26	75	55	M22x1.5	63	40	45
ST 50X 80 ER40 F	3-26	80	60	M28x1.5	63	50	54
ST 50X 80 ER50 F	10-34	80	77	M36x1.5	78	50	58

F indicates a flat on the shank.

B ST-ER-MF Mini Collet Chuck with a Flat (Swiss type)

(Unit: mm)

Cat. No.	Range	L1	L	J	D	D1	T	Machine type
ST 16X 35 ER16 MF	0.5-7	35.00	36.00	M8X1	22.0	16.00	17	(4)
ST 16X 38 ER11 MF	0.5-7	38.00	18.50	M8X1	16.0	16.00	14	(4)
ST 16X140 ER11 MF	0.5-7	140.00	18.50	M8X1	16.0	16.00	14	-
ST 20X 50 ER16 MF	0.5-10	50.00	26.00	M12X1	22.0	20.00	17	(1)
ST 20X 70 ER16 MF	0.5-10	70.00	26.00	M12X1	22.0	20.00	17	(1)
ST 20X120 ER16 MF	0.5-10	120.00	26.00	M12X1	22.0	20.00	17	(1)
ST 20X140 ER16 MF	0.5-10	140.00	26.00	M12X1	22.0	20.00	17	(1)
ST 22X 38 ER16 MF	0.5-10	38.00	26.00	M12X1	22.0	22.00	19	(4)
ST 22X 70 ER16 MF	0.5-10	70.00	26.00	M12X1	22.0	22.00	19	(4)
ST 22X 70 ER25 MF	0.5-10	70.00	47.00	M12X1	35.0	22.00	27	(4)
ST 22X 80 ER20 MF	1-13	80.00	39.00	M12X1	28.0	22.00	21	(4)
ST 22X100 ER16 MF	1-16	100.00	28.00	M12X1	22.0	22.00	19	(4)
ST 25X 65 ER16 MF	0.5-10	65.00	28.00	M12X1	22.0	25.00	22	-
ST 25X 75 ER25 MF	1-13	75.00	48.00	M14X1	35.0	25.00	27	(2)
ST 25X100 ER20 MF	1-13	100.00	28.00	M14X1	28.0	25.00	22	(5)
ST 25X145 ER25 MF	1-16	145.00	36.00	M14X1	35.0	25.00	27	(5)
ST 25X154 ER20 MF	1-16	154.00	28.00	M14X1	28.0	25.00	22	(5)
ST 32X 70 ER25 MF	1-16	70.00	30.00	M18X1	35.0	32.00	27	(3)

(1) Citizen
(2) Manurhin
(3) Schutte
(4) Star
(5) Tornos-Bechler

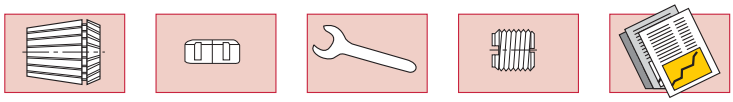

	ER Collet	Nut	Wrench	Preset Screw	User Guide
Page	116 - 119	147	148	149	113 - 115

Straight Shank • Collet Chuck Holder

ST-ER-MF-D

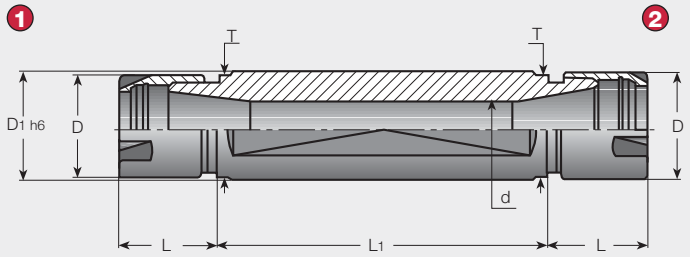

1 **Straight Shank**
2 **DIN6499**

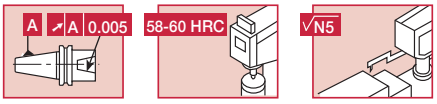

ST-ER-MF D Double Ended Mini Collet Chuck with a Flat

(Unit: mm)

Cat. No.	Range	D	D1 h6	d	L1	L	T	Machine type
ST 16X 50 ER11 MF D	0.5-7	16	16	7.5	50	18.5	14	-
ST 20X 30 ER11 MF D	0.5-7	16	20	7.5	30	18.5	17	(1)
ST 20X 50 ER11 MF D	0.5-7	16	20	7.5	50	18.5	17	(1)
ST 20X 55 ER16 MF D	0.5-10	22	20	10.5	55	25.0	17	(1)
ST 22X 55 ER16 MF D	0.5-10	22	22	10.5	55	28.0	19	(2)
ST 22X 75 ER16 MF D	0.5-10	22	22	10.5	75	28.0	19	(2)
ST 25X 62 ER16 MF D	0.5-10	22	25	10.5	62	28.0	22	-
ST 32X 55 ER20 MF D	1-13	28	32	13.5	55	28.0	27	(2)
ST 32X 75 ER20 MF D	1-13	28	32	13.5	75	28.0	27	(2)

(1) Citizen
(2) Star

ST-ER-S

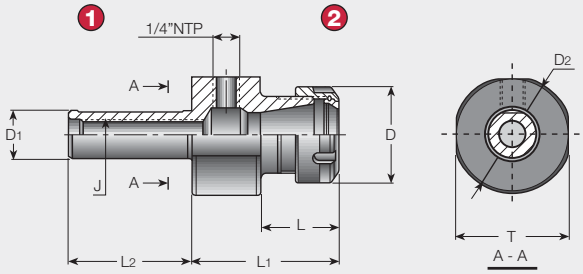

1 **Straight Shank**
2 **DIN6499**

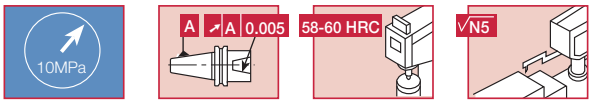

ST-ER-S ER Collet Chuck with Internal Coolant

(Unit: mm)

Cat. No.	Range	L2	L1	L	J	D	D1	D2	T
ST 20X 65 ER16S	0.5-10	65	54	29.6	M12	28	20	40	34
ST 20X 65 ER20S	1-13	65	63	31.0	M12	34	20	40	34
ST 20X 65 ER25S	1-16	65	72	32.0	M12	42	20	54	51
ST 20X 65 ER32S	2-20	65	77	41.0	M12	50	20	63	59
ST 25X 65 ER25S	1-16	65	72	32.0	M12	42	25	54	50
ST 25X 65 ER32S	2-20	65	77	41.0	M16	50	25	63	59
ST 32X 65 ER32S	2-20	65	77	41.0	M18x1.5	50	32	63	59
ST 40X 75 ER32S	2-20	75	77	41.0	M22x1.5	50	40	63	59

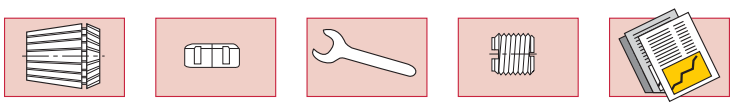

Page ☞ ER Collet 116 - 119 | Nut 147 | Wrench 148 | Preset Screw 149 | User Guide 113 - 115

ST-SHRINK

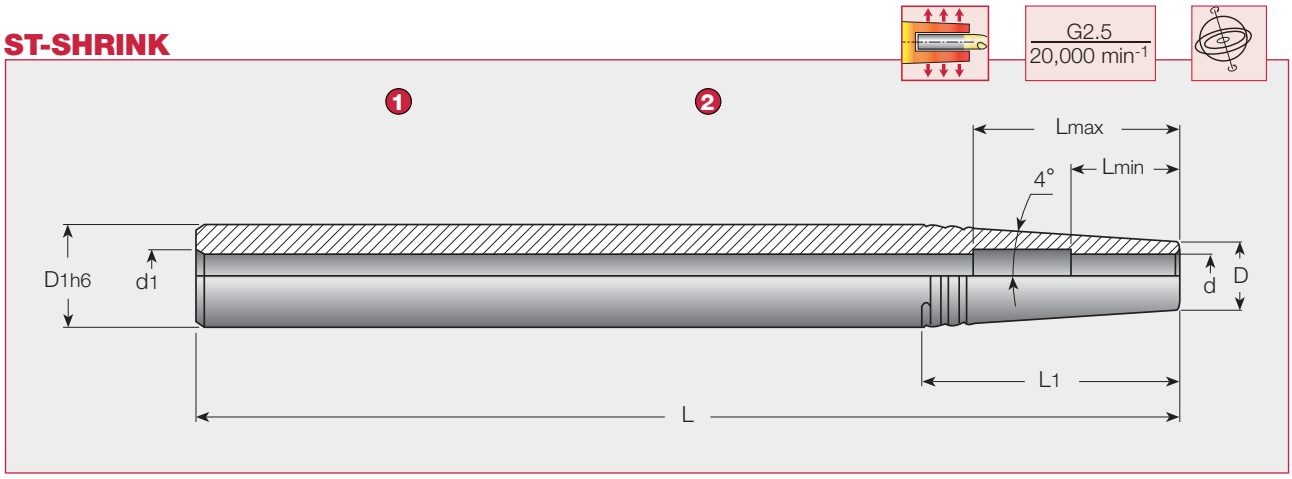

1 **Straight Shank**
2 **TungShrink**

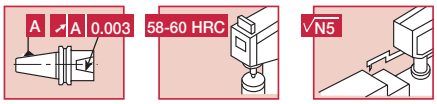

ST-SHRINK Thermal SHRINK Holder Straight Shank SRK type - Metric

(Unit: mm)

Cat. No.	d	D	D_1	d_1	L	L_1	Lmin	Lmax
ST 12X160 SRK 3	3	10	12	4	160	14.3	10	-
ST 12X160 SRK 4	4	10	12	4	160	14.3	12	27
ST 16X160 SRK 3	3	10	16	6	160	43.0	10	-
ST 16X160 SRK 4	4	10	16	6	160	43.0	12	-
ST 16X160 SRK 5	5	10	16	6	160	43.0	15	-
ST 16X160 SRK 6	6	11	16	6	160	35.5	18	35
ST 20X200 SRK 5	5	10	20	6	200	71.5	15	-
ST 20X200 SRK 6	6	11	20	6	200	64.5	18	40
ST 20X200 SRK 8	8	14	20	6	200	43.0	25	40
ST 25X200 SRK 6	6	11	25	8	200	100.0	18	35
ST 25X200 SRK 8	8	14	25	8	200	78.6	25	40
ST 25X200 SRK 10	10	16	25	8	200	64.3	30	50
ST 25X200 SRK 12	12	20	25	8	200	35.7	32	52

ST-SHRINK Thermal SHRINK Holder Straight Shank SRK type - Inch

(Unit: inch)

Cat. No.	d	D	D_1	d_1	L	L_1	Lmin	Lmax
ST 1/2X6.30 SRK 1/8	0.125	0.394	0.5	0.157	6.3	0.76	0.39	-
ST 1/2X6.30 SRK 3/16	0.188	0.394	0.5	0.157	6.3	0.76	0.59	1.18
ST 5/8X6.30 SRK 1/8	0.125	0.394	0.625	0.236	6.3	1.374	0.39	-
ST 5/8X6.30 SRK 3/16	0.188	0.394	0.625	0.236	6.3	1.654	0.59	-
ST 5/8X6.30 SRK 1/4	0.25	0.433	0.625	0.236	6.3	1.374	0.71	1.38
ST 3/4X8.00 SRK 3/16	0.188	0.394	0.75	0.236	8	2.548	0.59	-
ST 3/4X8.00 SRK 1/4	0.25	0.433	0.75	0.236	8	2.267	0.71	1.38
ST 3/4X8.00 SRK 5/16	0.313	0.551	0.75	0.236	8	1.422	0.98	1.58
ST 1X8.000 SRK 1/4	0.25	0.433	1	0.315	8	4.053	0.71	1.38
ST 1X8.000 SRK 5/16	0.313	0.551	1	0.315	8	3.209	0.98	1.58
ST 1X8.000 SRK 3/8	0.375	0.63	1	0.315	8	2.646	1.18	1.77
ST 1X8.000 SRK 7/16	0.438	0.787	1	0.315	8	1.52	1.26	1.97
ST 1X8.000 SRK 1/2	0.5	0.787	1	0.315	8	1.52	1.26	1.97

Note: Size table is inch.

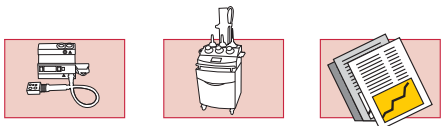

Page ☞ Thermal 138 | Induction 136 | User Guide 131 - 132

DIN69880-HYDRO

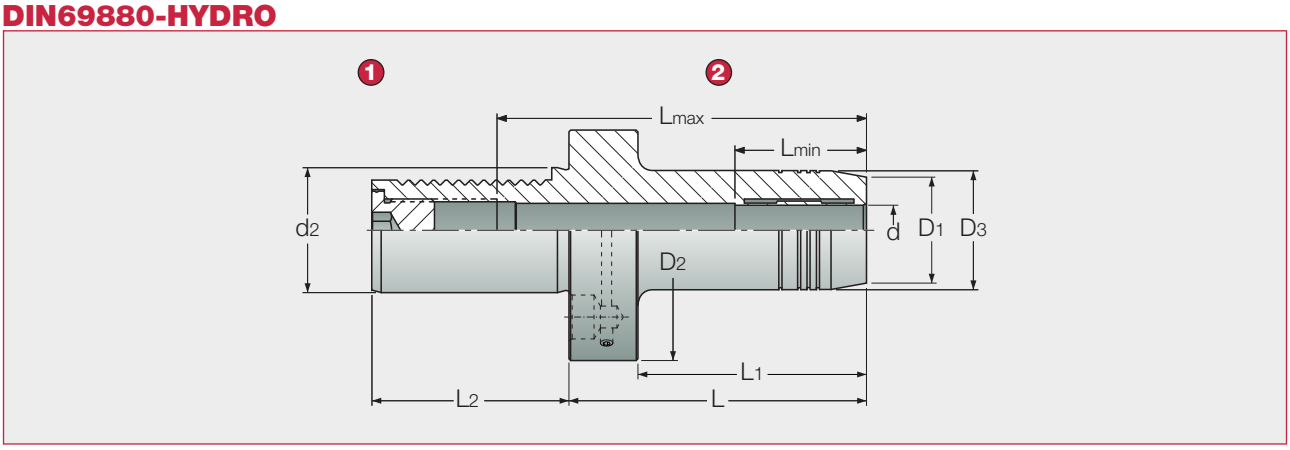

1 **VDI DIN69880**
2 **TungHydro**

DIN69880 HYDRO Hydraulic Chuck Holder

(Unit: mm)

Cat. No.	d	D_1	D_3	D_2	d_2	L_2	L	L_1	L_{min}	L_{max}
DIN69880 30 HYDRO 20X89	20	38	42	68	30	55	89	73	48	85
DIN69880 30 HYDRO 25X100	25	46	50	68	30	55	100	78	54	85
DIN69880 30 HYDRO 32X100	32	56	60	68	30	55	100	78	58	90
DIN69880 40 HYDRO 20X95	20	38	42	83	40	63	95	73	48	130
DIN69880 40 HYDRO 25X95	25	46	50	83	40	63	95	73	54	130
DIN69880 40 HYDRO 32X95	32	56	60	83	40	63	95	78	58	90

Clamping wrench (wrench HYDRO HEX 4) should be ordered separately.
Note: Available are reduction sleeves for 12, 20, 25 and 32 mm bore diameters. Chucking forces will significantly reduce if reduction sleeves are used (ordered separately).

SC Collet
Page 122

User Guide
6, 127 - 129

Tungaloy
Member IMC Group

Straight Shank • TUNGGTI • Tapping Holder

GTI ER-ST

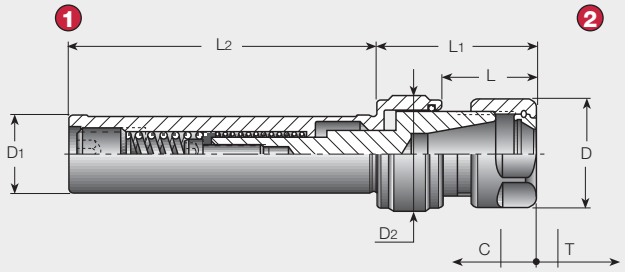

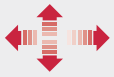

1. **Straight Shank**
2. **TungGTI DIN6499**

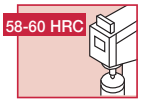

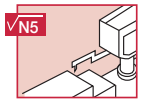

GTI ER-ST Tapping Holder

(Unit: mm)

Cat. No.	Tap Capacity	L	L_1	L_2	D	D_1	D_2	T	C
GTI ER11 ST16X150 M	M2-M7	19.0	-	150	16	16	-	6	3
GTI ER16 ST20X 80	M3-M10	24.6	41.6	80	28	20	29.5	8	3
GTI ER20 ST20X 80	M4-M14	28.0	49.0	80	34	20	33.5	8	3
GTI ER25 ST25X 80	M5-M16	32.0	53.0	80	42	25	40.5	9	4
GTI ER32 ST25X 80	M6-M20	32.0	77.2	80	50	25	56.5	9	4
GTI ER40 ST32X 80	M6-M27	51.0	95.2	80	63	32	56.5	9	4

Kit GTI ER11 - ER40
Tapping Holder Kit

KIT GTI ER-ST

(Unit: mm)

Cat. No.	Range
KIT GTI ER11 ST16X150 4M	3, 4, 5, 6
KIT GTI ER16 ST20X80 4	4, 5, 6, 7
KIT GTI ER20 ST20X80 4	5, 6, 8, 9
KIT GTI ER25 ST25X80 5	6, 7, 9, 11, 12
KIT GTI ER32 ST25X80 6	6, 7, 9, 11, 12, 16
KIT GTI ER40 ST32X80 6	9, 11, 14, 16, 18, 20

Includes GTI, collets & Wrench

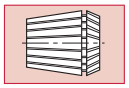

ER Collet

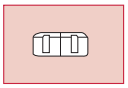

Nut

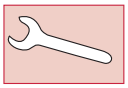

Wrench

User Guide

Page ☞ 116 - 119 | 147 | 148 | 9, 113 - 115

Morse Taper • Collet Chuck Holder

MT-ER

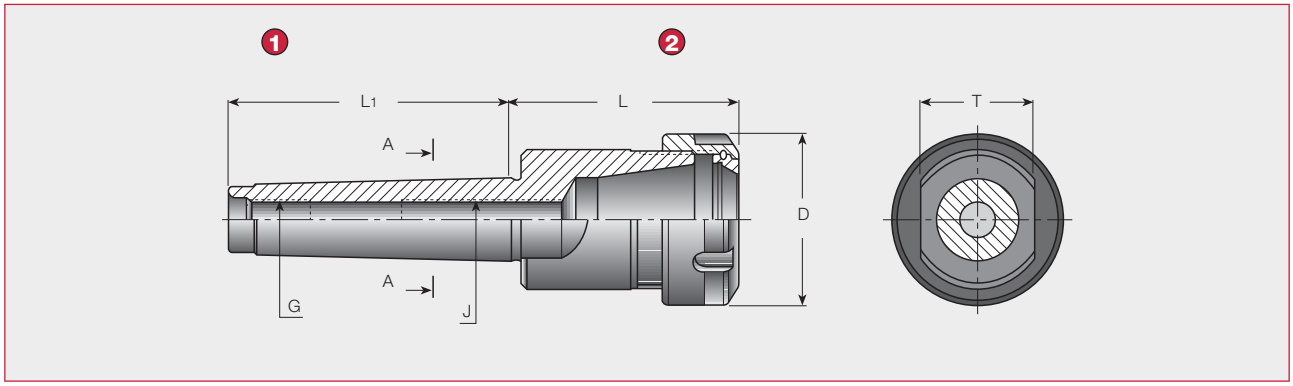

1. **Morse taper**
2. **DIN6499**

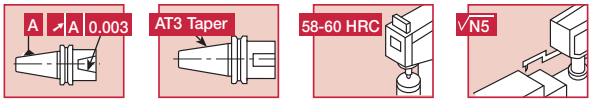

MT-ER ER Collet Chuck Holder

(Unit: mm)

Cat. No.	Range	L	L_1	D	J	G	T
MT 2 ER20X 56	1-13	48.5	64.0	34	M10	M10	22
MT 2 ER25X 60	1-16	52.0	64.0	42	M10	M10	28
MT 3 ER32X 69	2-20	69.0	81.0	50	M12	M12	24
MT 3 ER40X 79	3-26	79.0	81.0	63	M12	M12	24
MT 4 ER32X 61	2-20	60.5	102.5	50	M16	M16	32
MT 4 ER40X 82	3-26	81.5	102.5	63	M16	M16	32
MT 4 ER50X108	10-34	107.5	102.5	78	M16	M16	32
MT 5 ER40X 82	3-26	82.0	129.5	63	M28x1.5	M20	45
MT 5 ER50X 85	10-34	85.0	129.5	78	M28x1.5	M20	45

Straight Shank • Center Alignment and Cylindical

ADJ ST-ER

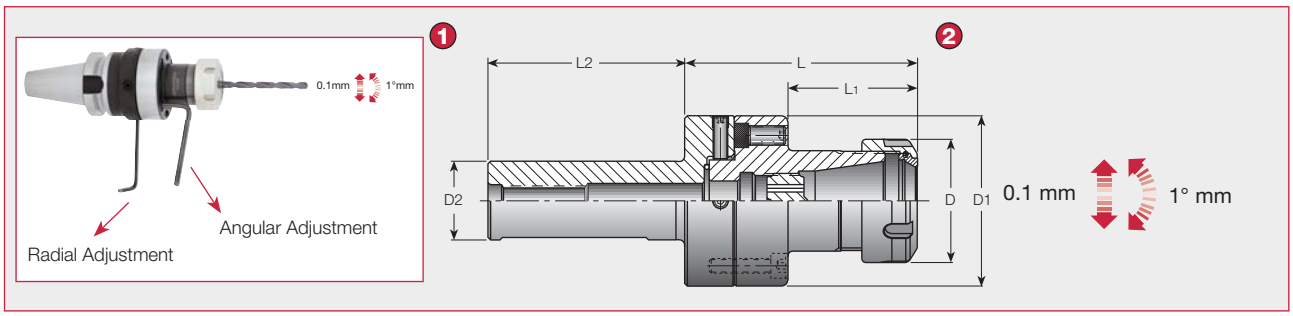

1. **Straight Shank**
2. **DIN6499**

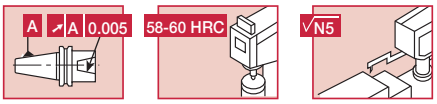

ADJ ST-ER ER Collet Chuck with Center Alignment

(Unit: mm)

Cat. No.	Range	L	L_1	L_2	D	D_1	D_2
ADJ ST25 D70 ER32	2-20	94.5	52.5	80	50	70	25
ADJ ST32 D70 ER32	2-20	94.5	52.5	80	50	70	32

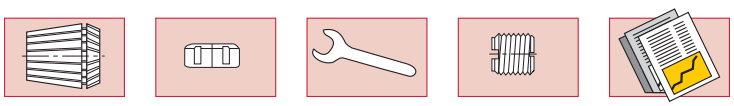

	ER Collet	Nut	Wrench	Preset Screw	User Guide
Page	116 - 119	147	148	149	113 - 115

GYRO ST-ER

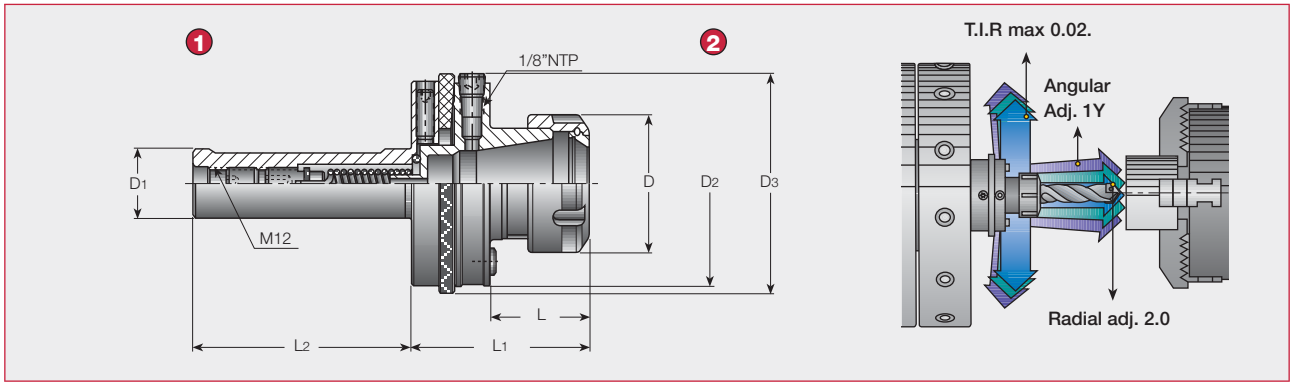

1 **Straight Shank**
2 **TungGyro DIN6499**

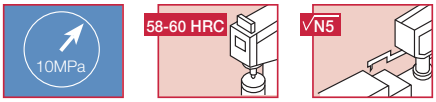

GYRO ST-ER Center Alignment Collet Chuck Holder

(Unit: mm)

Cat. No.	Range	D_1	D	D_2	D_3	L	L_1	L_2
GYRO ST20 ER20	1-13	20	34	57	63	28.5	58.80	80
GYRO ST20 ER25	1-16	20	34	57	63	28.5	58.80	80
GYRO ST25 ER25	1-16	25	42	74	79	35.5	65.65	80
GYRO ST25 ER32	2-20	25	50	74	79	36.5	66.65	80
GYRO ST32 ER32	2-20	32	50	74	79	36.5	66.65	80
GYRO ST40 ER32	2-20	40	50	74	79	36.5	66.65	80

⚠ First-time users should buy a GYRO kit which includes a test bar and a bushing for performing the alignment procedure.

KIT GYRO-ST-ER Center Alignment Collet Chuck Holder Kit

(Unit: mm)

Cat. No.	Range	D_1	D	D_2	D_3	L	L_1	L_2
KIT GYRO ST20 ER20	1-13	20	34	57	63	28.5	58.80	80
KIT GYRO ST20 ER25	1-16	20	34	57	63	28.5	58.80	80
KIT GYRO ST25 ER25	1-16	25	42	74	79	35.5	65.65	80
KIT GYRO ST25 ER32	2-20	25	50	74	79	36.5	66.65	80
KIT GYRO ST32 ER32	2-20	32	50	74	79	36.5	66.65	80
KIT GYRO ST40 ER32	2-20	40	50	74	79	36.5	66.65	80

Kit includes: GYRO, test bar and bushing.

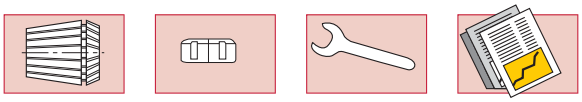

	ER Collet	Nut	Wrench	User Guide
Page ☞	116 - 119	147	148	8, 113 - 115

GYRO DIN69880-ER

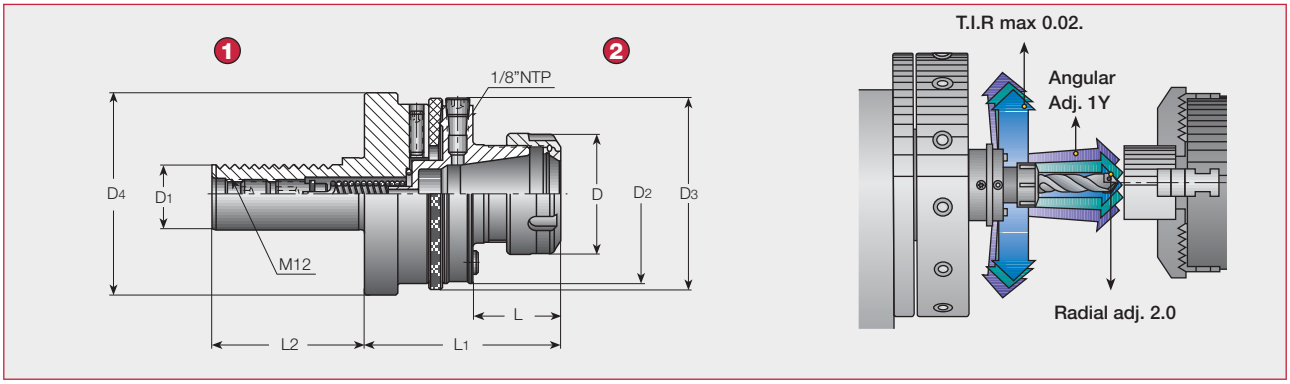

1 **VDI DIN69880**
2 **TungGyro DIN6499**

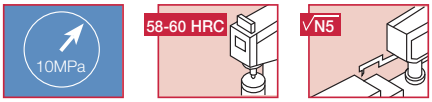

GYRO DIN69880-ER Center Alignment Collet Chuck Holder

(Unit: mm)

Cat. No.	Range	D_1	D	D_2	D_3	D_4	L	L_1	L_2
GYRO DIN69880 30 ER25	1-16	30	42	74	79	68.0	35.5	80.65	55
GYRO DIN69880 30 ER32	2-20	30	50	74	79	68.0	36.5	81.65	55
GYRO DIN69880 40 ER32	2-20	40	50	74	79	83.2	36.5	81.65	63
GYRO DIN69880 50 ER32	2-20	50	50	74	79	98.0	36.5	81.65	78

⚠ First-time users should buy a GYRO kit which includes a test bar and a bushing for performing the alignment procedure.

KIT GYRO-D69880-ER Center Alignment Collet Chuck Holder

(Unit: mm)

Cat. No.	Range	D_1	D	D_2	D_3	D_4	L	L_1	L_2
KIT GYRO 30 D69880 ER25	1-16	30	42	74	79	68.0	35	80	55
KIT GYRO 30 D69880 ER32	2-20	30	50	74	79	68.0	36	81	55
KIT GYRO 40 D69880 ER32	2-20	40	50	74	79	83.2	36	81	63
KIT GYRO 50 D69880 ER32	2-20	50	50	74	79	98.0	36	81	78

Kit includes: GYRO, test bar and bushing.

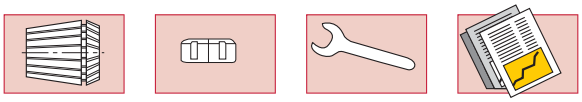

Page ☞
ER Collet 116 - 119
Nut 147
Wrench 148
User Guide 8, 113 - 115

Tungaloy Member IMC Group

TUNGGFI

Floating Reamer Collet Chuck

Morse Taper • TUNGGFI

Straight Shank • TUNGGFI • Center Alignment Collet Chuck

A GFI MT-ER

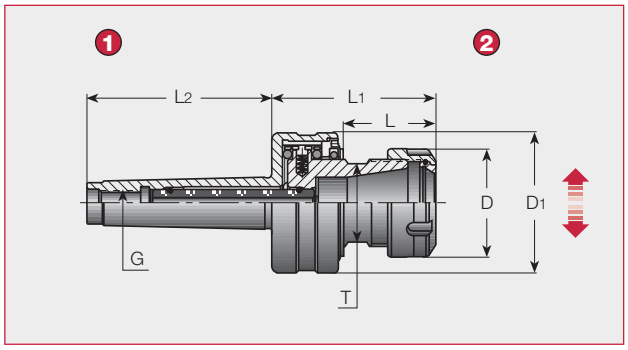

B GFI ST-ER

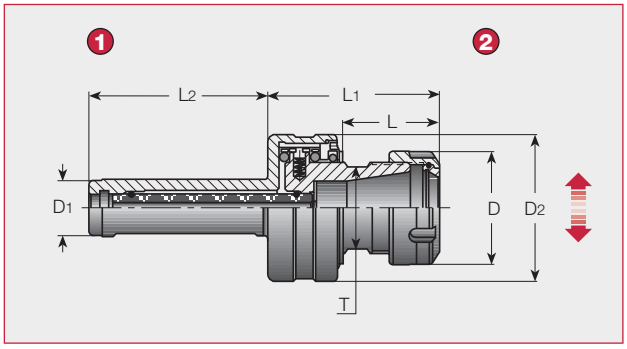

1 DIN6383
DIN228-2
2 TungGFI DIN6499

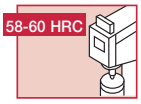

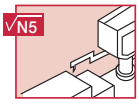

1 Straight Shank
2 TungGFI DIN6499

A GFI MT-ER Floating Reamer Collet Chuck Holder

(Unit: mm)

Cat. No.	Range	L_2	L_1	L	D_1	D	G	Radial Float	T
GFI MT 2 ER20	1-13	64	60.5	34.5	50	34	M10	1	22
GFI MT 3 ER32	2-20	81	81.9	45.9	65	50	M12	1.6	36

⚠ Maximum 2000 min^{-1}

B GFI ST-ER Floating Reamer Collet Chuck

(Unit: mm)

Cat. No.	Range	L_2	L_1	L	D_2	D_1	D	Radial Float	T
GFI ST20 ER20	1-13	65	55.5	34.5	50	20	34	1	22
GFI ST25 ER32	2-20	80	76.9	45.9	65	25	50	1.6	36

⚠ Maximum 2000 min^{-1}

GFI ER - Floating Reamer Collet Chuck

Floating chuck - adjusts the misalignment between reamer and workpiece hole to ensure the same accuracy as the reamer itself.

Application:

The GFI floating chuck is a unique holder that compensates for the radial misalignment existing in the reaming operations carried out on vertical and horizontal machine tools.

Features:

Radial self floating mechanism compensates for misalignment between reamer and workpiece to ensure the same tolerance as the reamer itself.
The special self-centering mechanism eliminates tapered and oversized bores.

Advantages:

Unique ball bearing and axle drive shaft structure enables vertical and horizontal machining.
Precise and efficient clamping with ER spring collets or ER COOLIT collets.

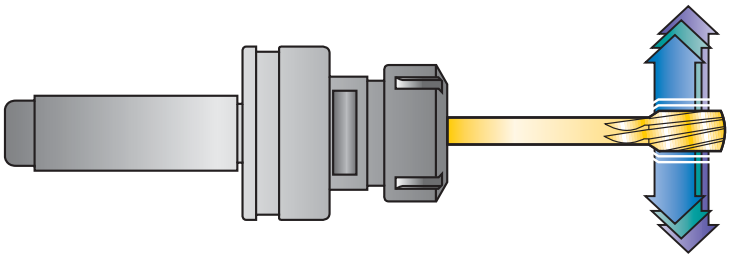

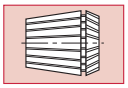

ER Collet

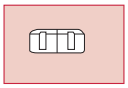

Nut

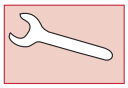

Wrench

Page ☞ 116 - 119 | 147 | 148

Tungaloy Member IMC Group

TUNGFLEX and TUNGMEISTER Connection Options

MILLING HEADS

TUNGFLEX / TUNGSHRINK

Cat. No.	Connection
CDP_M-SRK	M10, M12

TUNGFLEX / Collet Chuck

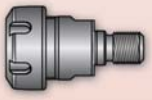

Cat. No.	Connection
CDP_ER-M	M10, M12, M16

ADAPTERS

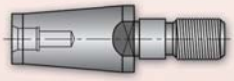

Cat. No.	Connection
CAB	M06, M08
CAB	M08, M10
CAB	M10, M12
CAB	M12, M16

Legend

TUNGMEISTER Connection screw size	TUNGFLEX Connection
S05	M06
S06	M08
S08	M10
S10	M12
S12	M16

Square Endmills

Cat. No.	Connection
VGC	S05, S06, S08, S10
VEE-A	S05, S06, S08, S10, S12
VEE, VEC	S05, S06, S08, S10, S12
VEE-I	S05, S06, S08, S10, S12
VEE-C	S05, S06, S08, S10, S12
VEE-R	S05, S06, S08, S10, S12

Ball Endmills, Toroidal Endmills

Cat. No.	Connection
VBE-BGA	S05, S06, S08, S10, S12
VBD-BG	S05, S06, S08, S10, S12
VBB-BG	S05, S06, S08, S10
VRC	S05, S06, S08, S10
VBB-BM	S05, S06, S08, S10
VBB-SG	S05, S06, S08, S10
VRB	S06, S08, S10, S12
VRD	S05, S06, S08, S10

High feed Endmills

Cat. No.	Connection
VFX-SG	S06, S08, S10, S12

Centering Endmills

Cat. No.	Connection
VDP	S06

Concave radii milling Endmills

Cat. No.	Connection
VCR	S05, S06, S08, S10, S12

Chamfering Endmills

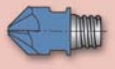

Cat. No.	Connection
VCA	S06, S08, S10, S12
VCP	S05, S06, S08, S10
VCW	S06

Thread Endmills

Cat. No.	Connection
VTB	S05, S06, S08, S10
VST	S06, S08, S10

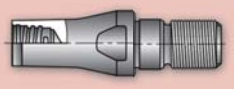

Cat. No.	Connection	Connection
VAD-M	S08	M08
VAD-M	S08	M10
VAD-M	S08	M12

Features

- Modular system reduces stock cost by using the same head with different shank options.
- Enables machining with larger overthang.
- Same head can be mounted on metric and inch combinations.

SHANKS

S-M

Connection	Shank size
M06	C10
M08	C16
M10	C20
M12	C25
M16	C32

S-M

Connection	Shank size
M06	C10 / C12 / C16
M08	C16 / C20
M10	C20 / C25
M12	C25 / C32
M16	C32

S-M-CF4

Cat. No.	
M12	CF4
M16	CF4

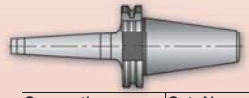

Connection	Cat. No.
M06	DIN 69871-ODP
M08	
M10	
M12	
M16	

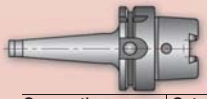

Connection	Cat. No.
M06	HSK A-ODP HSK E-ODP
M08	
M10	
M12	
M16	

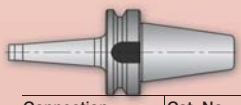

Connection	Cat. No.
M06	BT-ODP
M08	
M10	
M12	
M16	

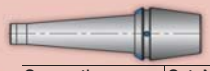

Connection	Cat. No.
M06	ER32-ODP
M08	
M10	
M12	

VSS-D

Connection	Cat. No.
S05	W12 / C08
S06	W16 / C10
S08	W16 / C12
S10	W20 / C16
S12	W25 / C20

V TSD

Connection	Cat. No.
S05	C12 / C16
S06	C16 / C20
S08	C16 / C20
S10	C20 / C25
S12	C25 / C32

TUNGFLEX • Indexable Modular System

S M

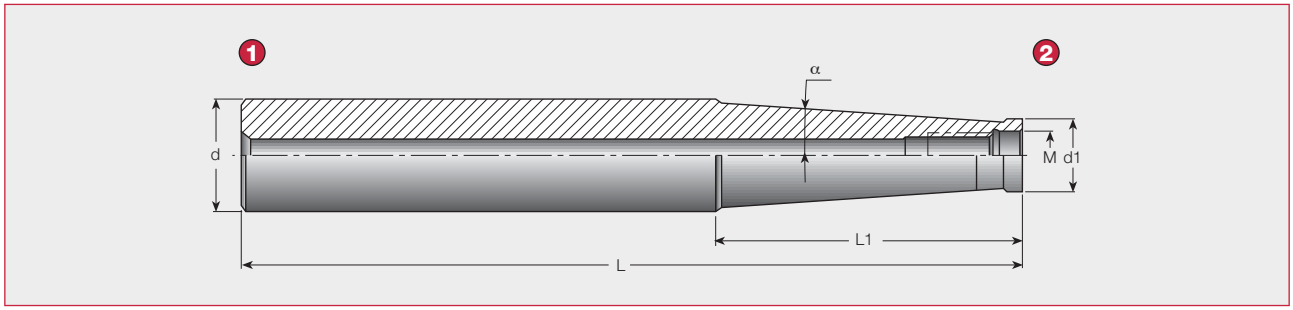

1 **Straight Shank**
2 **TungFlex**

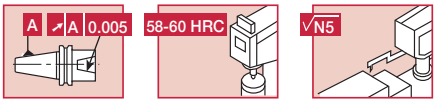

S M Straight Shank

(Unit: mm)

Cat. No.	L	d	d_1	M	α	Shank type
S M06-L60 C10	60	10	9.7	M6	0°	C
S M06-L105-C12	105	12	9.7	M6	1.2°	C
S M06-L125-C16	125	16	9.7	M6	3.3°	C
S M08-L73 C16	73	16	13.0	M8	0°	C
S M08-L128-C16	128	16	13.0	M8	0.9°	C
S M08-L170-C20	170	20	13.0	M8	3.3°	C
S M10-L80 C20	80	20	18.0	M10	0°	C
S M10-L130-C20	130	20	18.0	M10	0.6°	C
S M10-L200-C25	200	25	19.0	M10	3.3°	C
S M12-L86-C25	86	25	21.0	M12	5.1°	C
S M12-L200-C32	200	32	21.0	M12	4.4°	C
S M16-L95-C32	95	32	29.0	M16	1.7°	C
S M16-L230-C32	230	32	29.0	M16	1.8°	C

Note: All of the shanks have coolant holes.

TUNGFIT • TUNGFLEX • Modular System

S M-CF

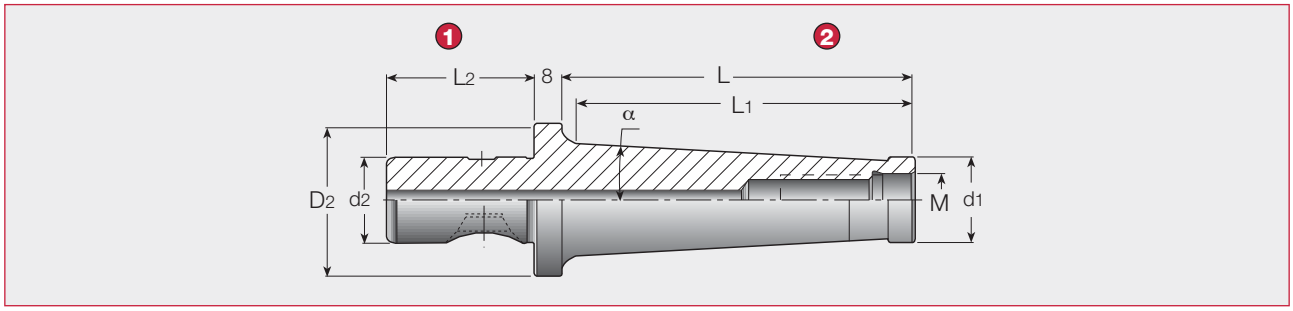

1 **TungFit**
2 **TungFlex**

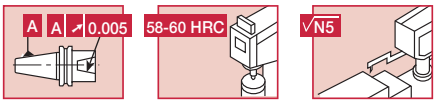

S M-CF Conversion Adapter

(Unit: mm)

Cat. No.	L	L_1	d_1	M	d_2	D_2	L_2	α
S M12-L85 / 3.30-CF4	93	81.3	21	M12	25	44	42	4.4°
S M16-L130 / 5.11-CF4	138	126.8	29	M16	25	44	42	2.6°
S M12-L140 / 5.50-CF4	148	139.1	21	M12	25	44	42	4.4°
S M16-L170 / 6.70-CF4	178	168.6	29	M16	25	44	42	2.0°

Tungaloy
Member IMC Group

CAB M-M

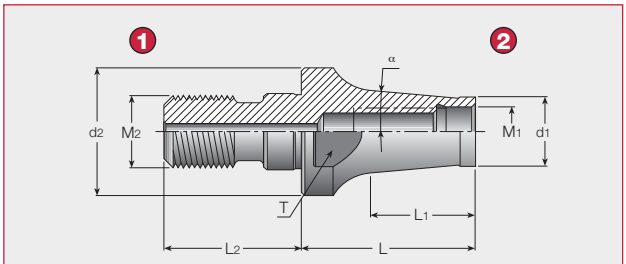

Fig 1

CAB-M-M-C

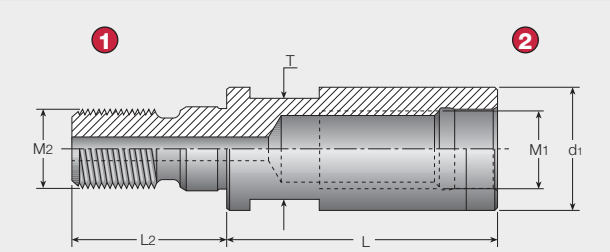

Fig 2

1 **TungFlex**
2 **TungFlex**

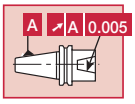

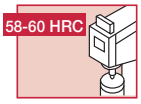

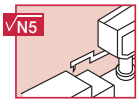

CAB M-M FLEX Reducer and Extensions

(Unit: mm)

Cat. No.	M_1	d_1	L	L_1	M_2	d_2	L_2	T	α	Fig
CAB M06 M06-C (1)	M6	9.8	25	-	M6	-	14.5	8.00	-	2
CAB M06M08	M6	9.7	30	24.8	M8	13	17.5	9.50	5.7°	1
CAB M08 M08-C (1)	M8	13.0	30	-	M8	-	17.5	9.60	-	2
CAB M08M10	M8	13.0	40	33.4	M10	18	20.0	15.00	5.2°	1
CAB M10 M10-C (1)	M10	18.0	35	-	M10	-	20.0	15.00	-	2
CAB M10 M10 / 15.8-C (1)	M10	15.8	35	-	M10	-	20.0	12.75	-	2
CAB M10M12	M10	18.0	45	36.4	M12	21	22.0	17.00	2.5°	1
CAB M12 M12-C (1)	M12	21.0	40	-	M12	-	22.0	17.00	-	2
CAB M12M16	M12	21.0	50	42.5	M16	29	25.0	25.00	6.3°	1
CAB M16 M16-C (1)	M16	29.0	40	-	M16	-	25.0	25.00	-	2

(1) With coolant holes.

Relation
Page 7

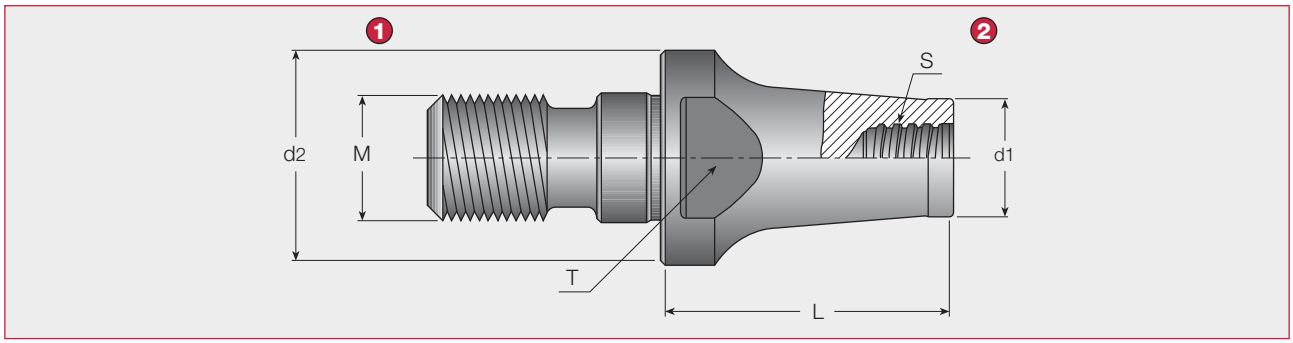

1 **TungFlex**
2 **TungMeister**

VAD-M Conversion Adapter

(Unit: mm)

Cat. No.	S	L	d_1	d_2	M	T
VAD130L016S08-S-M8	S08	16	11.7	13.0	M8	11
VAD130L025S08-S-M8	S08	25	11.7	13.0	M8	11
VAD180L020S08-S-M10	S08	20	11.7	18.0	M10	13
VAD180L025S08-S-M10	S08	25	11.7	18.0	M10	11
VAD210L020S08-S-M12	S08	20	11.7	21.0	M12	12.75
VAD210L025S08-S-M12	S08	25	11.7	21.0	M12	12.75

(1) Wrench size, used on flats for tightening (not supplied).
Do not apply lubricant to the threaded connection.

TUNGFLEX • Collet Chuck

CDP ER

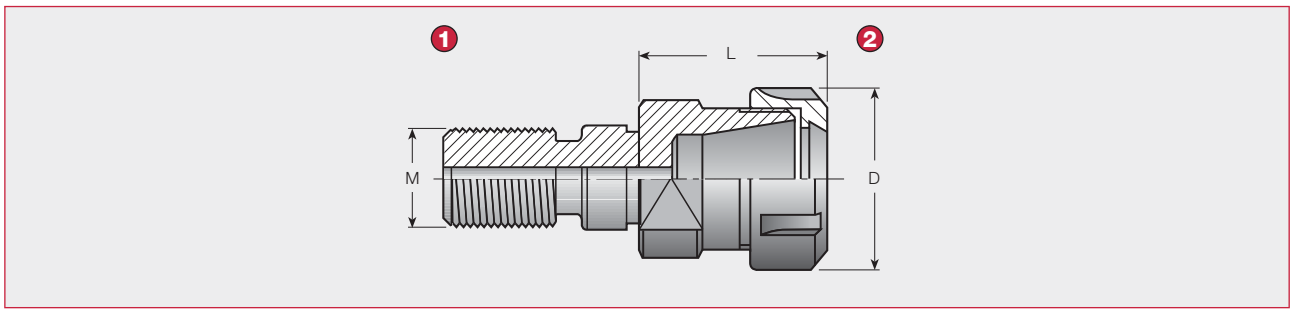

1 **TungFlex**
2 **DIN6499**

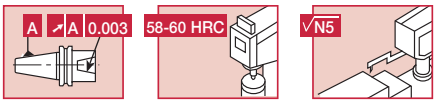

CDP-ER-M Adapter with ER Collet Chuck

(Unit: mm)

Cat. No.	Range	L	L_1	D	M	T
CDP ER11 M10 M	0.5-7	27.0	20	16	M10	15
CDP ER11 M12 M	0.5-7	27.0	22	16	M12	17
CDP ER16 M10 M	0.5-10	38.1	20	22	M10	17
CDP ER16 M12 M	0.5-10	37.1	22	22	M12	17
CDP ER16 M16	0.5-10	36.6	25	28	M16	25
CDP ER20 M16	1-13	45.5	25	34	M16	25
CDP ER25 M16	1-16	44.5	25	42	M16	28

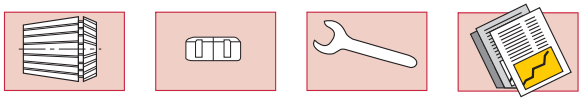

	ER Collet	Nut	Wrench	Relation
Page ☞	116 - 119	147	148	113 - 115

Tungaloy
Member IMC Group

CDP M-SRK

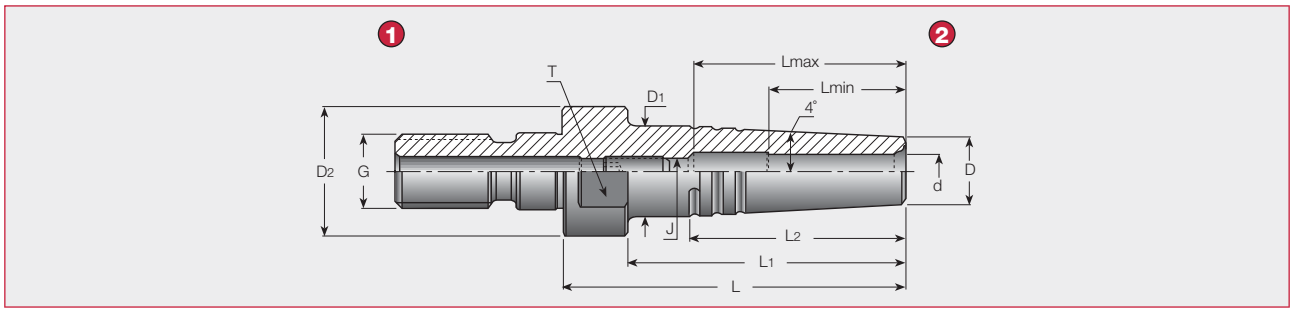

1 TungFlex
2 TungShrink

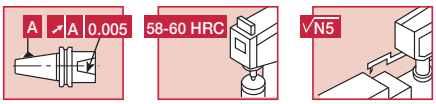

CDP M-SRK Adapter with SHRINK (SRK type) - Metric

(Unit: mm)

Cat. No.	d	L	L_1	L_2	Lmin	Lmax	D	D_1	D_2	J	Hex Key	G	T
CDP M10 SRK 3X40	3	40	31.5	28.4	10	16	10	14	18	M4	2.0	M10	15
CDP M10 SRK 4X40	4	40	31.5	28.4	12	19	10	14	18	M4	2.0	M10	15
CDP M10 SRK 5X40	5	40	31.5	28.4	15	25	10	14	18	M4	2.0	M10	15
CDP M10 SRK 6X40	6	40	31.5	28.4	18	28	11	15	18	M4	2.0	M12	15
CDP M12 SRK 3X45	3	45	36.5	28.8	10	16	10	14	21	M5	2.5	M12	18
CDP M12 SRK 4X45	4	45	36.5	28.8	12	18	10	14	21	M5	2.5	M12	18
CDP M12 SRK 5X45	5	45	36.5	28.8	15	25	10	14	21	M5	2.5	M12	18
CDP M12 SRK 6X45	6	45	36.5	28.4	18	28	11	15	21	M5	2.5	M12	18
CDP M12 SRK 8X45	8	45	36.5	28.8	25	35	14	18	21	M5	2.5	M12	18
CDP M12 SRK 10X45	10	45	-	35.6	30	40	16	21	21	M5	2.5	M12	18
CDP M12 SRK 12X45	12	45	-	36.0	32	42	20	25	21	M5	2.5	M12	18

CDP M-SRK Adapter with SHRINK (SRK type) - Inch

(Unit: inch)

Cat. No.	d	L	L_1	L_2	Lmin	Lmax	D	D_1	D_2	J	Hex Key	G	T
CDP M10 SRK 1/8X1.6	0.125	1.6	1.265	1.119	0.39	0.63	0.55	0.71	0.394	M4	2	M10	0.591
CDP M12 SRK 1/8X1.75	0.125	1.75	1.415	1.138	0.39	0.63	0.55	0.83	0.394	M5	2.5	M12	0.687
CDP M10 SRK 3/16X1.6	0.188	1.6	1.265	1.119	0.59	0.95	0.55	0.71	0.394	M4	2	M10	0.591
CDP M12 SRK 3/16X1.75	0.188	1.75	1.415	1.138	0.59	0.98	0.55	0.83	0.394	M5	2.5	M12	0.687
CDP M10 SRK 1/4X1.6	0.25	1.6	1.265	1.119	0.71	1.1	0.59	0.71	0.433	M4	2	M10	0.591
CDP M12 SRK 1/4X1.75	0.25	1.75	1.415	1.122	0.71	1.1	0.59	0.83	0.433	M5	2.5	M12	0.687
CDP M12 SRK 5/16X1.75	0.313	1.75	1.415	1.134	0.98	1.38	0.71	0.83	0.55	M5	2.5	M12	0.687
CDP M12 SRK 3/8X1.75	0.375	1.75	-	1.401	1.18	1.58	0.83	0.83	0.63	M5	2.5	M12	0.687

Note: Size table is inch.

Page
TungFlex 28, 55, 75, 87, 108, 109
Relation 131 - 132

TUNGFIT • Modular System Adapter

A ST-CF

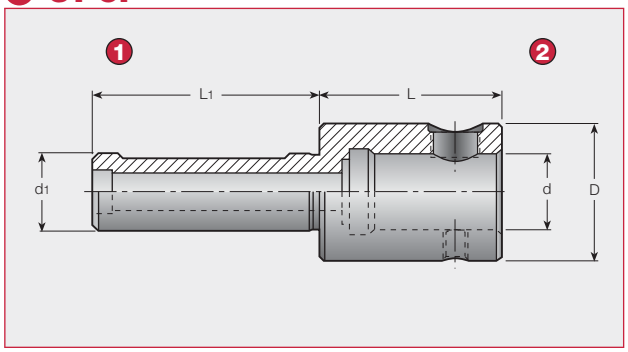

1 Straight Shank
2 TungFit

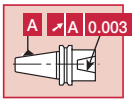

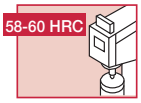

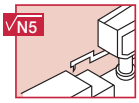

B EX CF

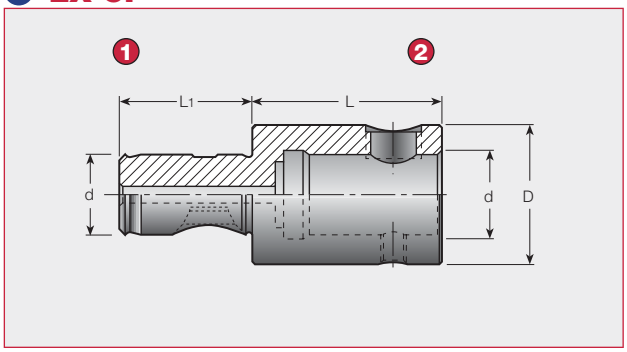

1 TungClick
2 TungClick

A ST CF Straight Shank Adapter

(Unit: mm)

Cat. No.	d1	L	L1	D	d
ST 25 CF4	25	60	80	44	CF4
ST 32 CF4	32	60	80	44	CF4

⚠ Tightening torque: 58.8 N·m

B EX CF Extension Adapter

(Unit: mm)

Cat. No.	L	L1	D	d
EX CF4-S	60	42	44	CF4
EX CF4-L	100	42	44	CF4

⚠ Tightening torque: 58.8 N·m

C SEM CF

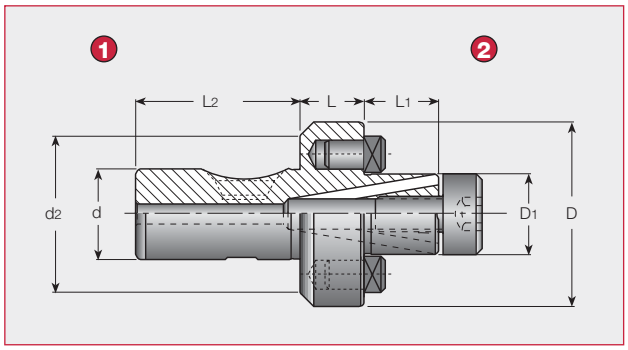

1 TungClick
2 DIN3937

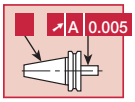

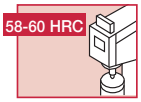

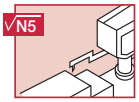

D ER-CF

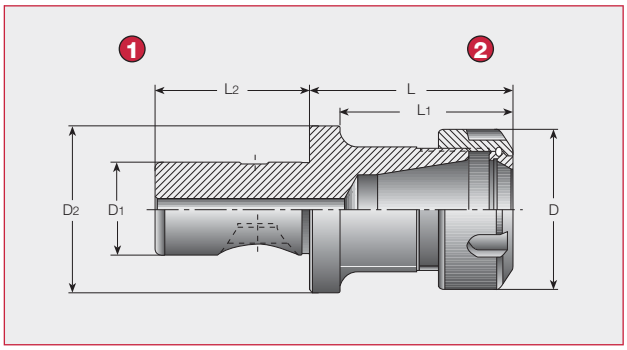

1 TungClick
2 DIN6499

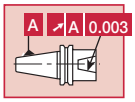

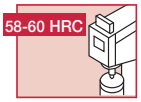

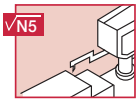

C SEM CF Shell Mill Adapter - Metric

(Unit: mm)

Cat. No.	L	L1	L2	D	d	D1	d2
SEM 22CF4 C	16	19	42	47	CF4	22	44

⚠ Tightening torque: 58.8 N·m

C SEM CF Shell Endmill Holder - Inch

(Unit: mm)

Cat. No.	L	L	L2	D	d	D1	d2
SEM 3 / 4 CF4 C	19.1	17	41.9	45	CF4	19.05	44
SEM 1 CF4 C	25.4	17	41.9	54	CF4	25.4	44

D ER-CF ER Collet Adapter

(Unit: mm)

Cat. No.	Range	L	L1	L2	D	D1	D2
ER11 CF4-S	0.5-7	55	47	42	19	25	44
ER16 CF4-L	0.5-10	100	92	42	28	25	44
ER16 CF4-S	0.5-10	55	47	42	28	25	44
ER20 CF4-S	1-13	55	92	42	34	25	44
ER25 CF4-S	1-16	55	47	42	42	25	44
ER32 CF4-L	2-20	100	92	42	50	25	44
ER32 CF4-S	2-20	55	47	42	50	25	44

⚠ Tightening torque: 58.8 N·m

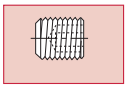
Lock Screw

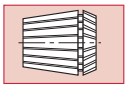
ER Collet

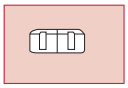
Nut

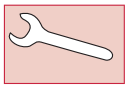
Wrench

User Guide

Page ☞ 150 | 116 - 119 | 147 | 148 | 113 - 115, 7

Tungaloy
Member IMC Group

ER Collet Chucking System

Shanks

CAT A.N.S.I B5.50/DIN 69871

HSK DIN 69893 Form A/E

BT MAS-403

ISO A.N.S.I B5.18-DIN 2080

R-8 Bridgeport

ST Straight Shank

MT Morse Taper

Collet Options

ER-SPR (ER Spring Collet)

ER-SEAL
(ER SEAL Collet for Internal coolant)

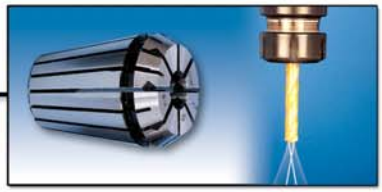

ER-SEAL JET2
(ER SEAL Collet for External coolant)

ER-SRK
(ER Collet with SHRINK Holder)

ER32 GTIN
(ER Collet with Tapping Holder)

ER32 ODP
(ER Collet with Indexable Modular System)

ER Collet

Standard

ER Collet type DIN6499

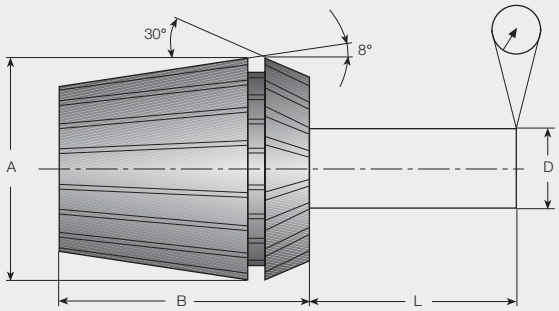

(Unit: mm)

Collet type	A	B	L	D	T.I.R Precision Standard type	T.I.R Precision "AA" Ultra Precision type	DIN6499
ER-11	11.5	18	6	1.0-1.6	0.01	0.005	-
ER-16	17	27	10	1.6-3.0	0.01	0.005	0.015
ER-20	21	31	16	3.0-6.0	0.01	0.005	0.015
ER-25	26	35	25	6.0-10.0	0.01	0.005	0.015
ER-32	33	40	40	10.0-18.0	0.01	0.005	0.020
ER-40	41	46	50	18.0-26.0	0.01	0.005	0.020
ER-50	52	60	60	26.0-34.0	0.01	-	0.025

ER 50 DIN6499

ER - Coolit Sealed Collet

Sealed Collet Jet

For straight shank cutting tools with internal coolant supply.

Sealed Collet JET2

With angular double nozzles. Coolant flow is direct to the cutting edge - for use with standard straight shank cutting tools (without coolant hole).

Standard Shank which can be used in Sealed Collets

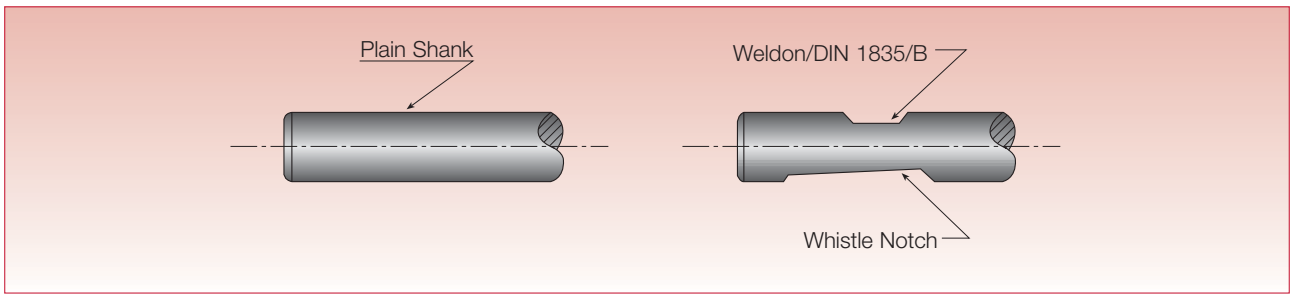

Note: The front end of the sealed collet should be located beyond weldon or the whistle notch.

ER Collet

ER - Top Clamping Nut DIN 6499

Description:

Friction bearing ER nut is a nut with a unique two-piece exclusive friction mechanism combining radial and angular self-centering movements.

Features:

- Unique two-piece friction bearing.
- Radial and angular float for better concentricity.
- Powerful gripping force, 50-100% higher than the standard ER nut due to the friction bearing mechanism.
- Balanced for higher spindle spin due to unique extractor teeth design.
- Compact design - general dimensions and size range are the same as the standard nut.
- Designed for use with sealed collets.

Always assemble the collet into the nut before mounting onto the collet chuck.

Insertion Procedure:

1. Insert the collet at an angle, fitting the two extractor teeth which protrude **(A)** into the collet's groove **(B)**.
2. Place the two parts on a clean and horizontal work surface.
3. Press down with your thumb on the back end of the collet until it clicks into place **(C)**.

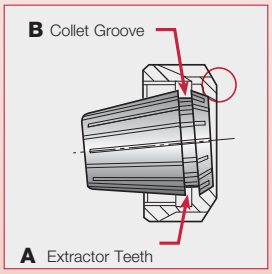

Important: Never insert the collet parallel to the extractor ring. Doing this will chip or break the extractor's teeth.

When unclamping the nut, the collet will self-release from the chuck by means of extractor teeth.

Extraction Procedure

1. Align the engraved diamond shape which is on the silver ring **(D)**, with any of the key slots **(E)** of the nut.
2. Place the nut with the collet facing down on a clean and horizontal work surface.
3. Insert a screwdriver vertically between the nut slots and the collet on the reverse side of the engraved diamond shape **(D)**.
4. Tilt the screwdriver outwards, while helping the extraction by pushing the collet's back end in the opposite direction **(F)**.

Note:

For maximum performance the clamping nut thread and collet taper must be cleaned and oiled before use.

Recommended Clamping Torque for Standard ER & ER-Top Clamping Nut

Important:

This torque is calculated with the maximum diameter capacity per collet which should be gradually reduced when used with a smaller shank size.

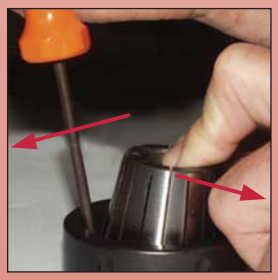

Nut type	N·m
ER-11	49
ER-11M	29.4
ER-16	68.7
ER-16M	39.2
ER-20	117.7
ER-20M	78.5
ER-25	196.1
ER-32	215.7
ER-40	245.1
ER-50	343.2

ER Collet

ER Spring Collet DIN 6499

ER11, 16, 20-SPR

(Unit: mm)

Cat. No.	Range
ER11 SPR 0.5-1	0.5-1
ER11 SPR 1-2	1-2
ER11 SPR 2-3	2-3
ER11 SPR 3-4	3-4
ER11 SPR 4-5	4-5
ER11 SPR 5-6	5-6
ER11 SPR 6-7	6-7
ER16 SPR 0.5-1	0.5-1
ER16 SPR 1-2	1-2
ER16 SPR 2-3	2-3
ER16 SPR 3-4	3
ER16 SPR 4-5	4-5
ER16 SPR 5-6	5-6
ER16 SPR 6-7	6-7
ER16 SPR 7-8	7-8
ER16 SPR 8-9	8-9
ER16 SPR 9-10	9-10
ER20 SPR 1-2	1-2
ER20 SPR 2-3	2-3
ER20 SPR 3-4	3-4
ER20 SPR 4-5	4-5
ER20 SPR 5-6	5-6
ER20 SPR 6-7	6-7
ER20 SPR 7-8	7-8
ER20 SPR 8-9	8-9
ER20 SPR 9-10	9-10
ER20 SPR 10-11	10-11
ER20 SPR 11-12	11-12
ER20 SPR 12-13	12-13

ER25, 32-SPR

(Unit: mm)

Cat. No.	Range
ER25 SPR 1-2	1-2
ER25 SPR 2-3	2-3
ER25 SPR 3-4	3-4
ER25 SPR 4-5	4-5
ER25 SPR 5-6	5-6
ER25 SPR 6-7	6-7
ER25 SPR 7-8	7-8
ER25 SPR 8-9	8-9
ER25 SPR 9-10	9-10
ER25 SPR 10-11	10-11
ER25 SPR 11-12	11-12
ER25 SPR 12-13	12-13
ER25 SPR 13-14	13-14
ER25 SPR 14-15	14-15
ER25 SPR 15-16	15-16
ER32 SPR 2-3	2-3
ER32 SPR 3-4	3-4
ER32 SPR 4-5	4-5
ER32 SPR 5-6	5-6
ER32 SPR 6-7	6-7
ER32 SPR 7-8	7-8
ER32 SPR 8-9	8-9
ER32 SPR 9-10	9-10
ER32 SPR 10-11	10-11
ER32 SPR 11-12	11-12
ER32 SPR 12-13	12-13
ER32 SPR 13-14	13-14
ER32 SPR 14-15	14-15
ER32 SPR 15-16	15-16
ER32 SPR 16-17	16-17
ER32 SPR 17-18	17-18
ER32 SPR 18-19	18-19
ER32 SPR 19-20	19-20

ER40, 50-SPR

(Unit: mm)

Cat. No.	Range
ER40 SPR 3-4	3-4
ER40 SPR 4-5	4-5
ER40 SPR 5-6	5-6
ER40 SPR 6-7	6-7
ER40 SPR 7-8	7-8
ER40 SPR 8-9	8-9
ER40 SPR 9-10	9-10
ER40 SPR 10-11	10-11
ER40 SPR 11-12	11-12
ER40 SPR 12-13	12-13
ER40 SPR 13-14	13-14
ER40 SPR 14-15	14-15
ER40 SPR 15-16	15-16
ER40 SPR 16-17	16-17
ER40 SPR 17-18	17-18
ER40 SPR 18-19	18-19
ER40 SPR 19-20	19-20
ER40 SPR 20-21	20-21
ER40 SPR 21-22	21-22
ER40 SPR 22-23	22-23
ER40 SPR 23-24	23-24
ER40 SPR 24-25	24-25
ER40 SPR 25-26	25-26
ER50 SPR 10-12	10-12
ER50 SPR 12-14	12-14
ER50 SPR 14-16	14-16
ER50 SPR 16-18	16-18
ER50 SPR 18-20	18-20
ER50 SPR 20-22	20-22
ER50 SPR 22-24	22-24
ER50 SPR 24-26	24-26
ER50 SPR 26-28	26-28
ER50 SPR 28-30	28-30
ER50 SPR 30-32	30-32
ER50 SPR 32-34	32-34

Sets & Kits

Page 120 - 121

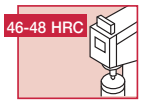

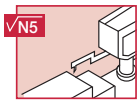

Tungaloy
Member IMC Group

ER Collet

ER Spring Collet DIN 6499 (ULTRA PRECISION)

ULTRA PRECISION AA

ER11, 16, 20-SPR-AA

(Unit: mm)

Cat. No.	Range
ER11 SPR 0.5-1 AA	0.5-1
ER11 SPR 1-2 AA	1-2
ER11 SPR 2-3 AA	2-3
ER11 SPR 3-4 AA	3-4
ER11 SPR 4-5 AA	4-5
ER11 SPR 5-6 AA	5-6
ER11 SPR 6-7 AA	6-7
ER16 SPR 0.5-1 AA	0.5-1
ER16 SPR 1-2 AA	1-2
ER16 SPR 2-3 AA	2-3
ER16 SPR 3-4 AA	3-4
ER16 SPR 4-5 AA	4-5
ER16 SPR 5-6 AA	5-6
ER16 SPR 6-7 AA	6-7
ER16 SPR 7-8 AA	7-8
ER16 SPR 8-9 AA	8-9
ER16 SPR 9-10 AA	9-10
ER20 SPR 1-2 AA	1-2
ER20 SPR 2-3 AA	2-3
ER20 SPR 3-4 AA	3-4
ER20 SPR 4-5 AA	4-5
ER20 SPR 5-6 AA	5-6
ER20 SPR 6-7 AA	6-7
ER20 SPR 7-8 AA	7-8
ER20 SPR 8-9 AA	8-9
ER20 SPR 9-10 AA	9-10
ER20 SPR 10-11 AA	10-11
ER20 SPR 11-12 AA	11-12
ER20 SPR 12-13 AA	12-13

ER25, 32-SPR-AA

(Unit: mm)

Cat. No.	Range
ER25 SPR 1-2 AA	1-2
ER25 SPR 2-3 AA	2-3
ER25 SPR 3-4 AA	3-4
ER25 SPR 4-5 AA	4-5
ER25 SPR 5-6 AA	5-6
ER25 SPR 6-7 AA	6-7
ER25 SPR 7-8 AA	7-8
ER25 SPR 8-9 AA	8-9
ER25 SPR 9-10 AA	9-10
ER25 SPR 10-11 AA	10-11
ER25 SPR 11-12 AA	11-12
ER25 SPR 12-13 AA	12-13
ER25 SPR 13-14 AA	13-14
ER25 SPR 14-15 AA	14-15
ER25 SPR 15-16 AA	15-16
ER32 SPR 2-3 AA	2-3
ER32 SPR 3-4 AA	3-4
ER32 SPR 4-5 AA	4-5
ER32 SPR 5-6 AA	5-6
ER32 SPR 6-7 AA	6-7
ER32 SPR 7-8 AA	7-8
ER32 SPR 8-9 AA	8-9
ER32 SPR 9-10 AA	9-10
ER32 SPR 10-11 AA	10-11
ER32 SPR 11-12 AA	11-12
ER32 SPR 12-13 AA	12-13
ER32 SPR 13-14 AA	13-14
ER32 SPR 14-15 AA	14-15
ER32 SPR 15-16 AA	15-16
ER32 SPR 16-17 AA	16-17
ER32 SPR 17-18 AA	17-18
ER32 SPR 18-19 AA	18-19
ER32 SPR 19-20 AA	19-20

ER40-SPR-AA

(Unit: mm)

Cat. No.	Range
ER40 SPR 3-4 AA	3-4
ER40 SPR 4-5 AA	4-5
ER40 SPR 5-6 AA	5-6
ER40 SPR 6-7 AA	6-7
ER40 SPR 7-8 AA	7-8
ER40 SPR 8-9 AA	8-9
ER40 SPR 9-10 AA	9-10
ER40 SPR 10-11 AA	10-11
ER40 SPR 11-12 AA	11-12
ER40 SPR 12-13 AA	12-13
ER40 SPR 13-14 AA	13-14
ER40 SPR 14-15 AA	14-15
ER40 SPR 15-16 AA	15-16
ER40 SPR 16-17 AA	16-17
ER40 SPR 17-18 AA	17-18
ER40 SPR 18-19 AA	18-19
ER40 SPR 19-20 AA	19-20
ER40 SPR 20-21 AA	20-21
ER40 SPR 21-22 AA	21-22
ER40 SPR 22-23 AA	22-23
ER40 SPR 23-24 AA	23-24
ER40 SPR 24-25 AA	24-25
ER40 SPR 25-26 AA	25-26

Sets & Kits

Page 120 - 121

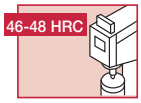

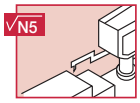

ER Coolit - Sealed JET Collets 10Mpa

ER16, 20, 25-SEAL

(Unit: mm)

Cat. No.	Range
ER16 SEAL 3-4	3-4
ER16 SEAL 4-5	4-5
ER16 SEAL 5-6	5-6
ER16 SEAL 6-7	6-7
ER16 SEAL 7-8	7-8
ER16 SEAL 8-9	8-9
ER16 SEAL 9-10	9-10
ER20 SEAL 3-4	3-4
ER20 SEAL 4-5	4-5
ER20 SEAL 5-6	5-6
ER20 SEAL 6-7	6-7
ER20 SEAL 7-8	7-8
ER20 SEAL 8-9	8-9
ER20 SEAL 9-10	9-10
ER20 SEAL 10-11	10-11
ER20 SEAL 11-12	11-12
ER20 SEAL 12-13	12-13
ER25 SEAL 3-4	3-4
ER25 SEAL 4-5	4-5
ER25 SEAL 5-6	5-6
ER25 SEAL 6-7	6-7
ER25 SEAL 7-8	7-8
ER25 SEAL 8-9	8-9
ER25 SEAL 9-10	9-10
ER25 SEAL 10-11	10-11
ER25 SEAL 11-12	11-12
ER25 SEAL 12-13	12-13
ER25 SEAL 13-14	13-14
ER25 SEAL 14-15	14-15
ER25 SEAL 15-16	15-16

ER32-SEAL

(Unit: mm)

Cat. No.	Range
ER32 SEAL 3-4	3-4
ER32 SEAL 4-5	4-5
ER32 SEAL 5-6	5-6
ER32 SEAL 6-7	6-7
ER32 SEAL 7-8	7-8
ER32 SEAL 8-9	8-9
ER32 SEAL 9-10	9-10
ER32 SEAL 10-11	10-11
ER32 SEAL 11-12	11-12
ER32 SEAL 12-13	12-13
ER32 SEAL 13-14	13-14
ER32 SEAL 14-15	14-15
ER32 SEAL 15-16	15-16
ER32 SEAL 16-17	16-17
ER32 SEAL 17-18	17-18
ER32 SEAL 18-19	18-19
ER32 SEAL 19-20	19-20

ER40-SEAL

(Unit: mm)

Cat. No.	Range
ER40 SEAL 3-4	3-4
ER40 SEAL 4-5	4-5
ER40 SEAL 5-6	5-6
ER40 SEAL 6-7	6-7
ER40 SEAL 7-8	7-8
ER40 SEAL 8-9	8-9
ER40 SEAL 9-10	9-10
ER40 SEAL 10-11	10-11
ER40 SEAL 11-12	11-12
ER40 SEAL 12-13	12-13
ER40 SEAL 13-14	13-14
ER40 SEAL 14-15	14-15
ER40 SEAL 15-16	15-16
ER40 SEAL 16-17	16-17
ER40 SEAL 17-18	17-18
ER40 SEAL 18-19	18-19
ER40 SEAL 19-20	19-20
ER40 SEAL 20-21	20-21
ER40 SEAL 21-22	21-22
ER40 SEAL 22-23	22-23
ER40 SEAL 23-24	23-24
ER40 SEAL 24-25	24-25
ER40 SEAL 25-26	25-26

Sets & Kits

Page 120 - 121

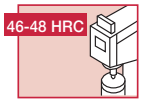

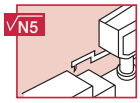

Tungaloy
Member IMC Group

ER Collet • External Coolant

ER Coolit - Sealed JET2 Collets 10Mpa

ER16, 20, 25-SEAL-JET2

(Unit: mm)

Cat. No.	Range
ER16 SEAL 3-4 JET2	3-4
ER16 SEAL 4-5 JET2	4-5
ER16 SEAL 5-6 JET2	5-6
ER16 SEAL 6-7 JET2	6-7
ER16 SEAL 7-8 JET2	7-8
ER16 SEAL 8-9 JET2	8-9
ER16 SEAL 9-10 JET2	9-10
ER20 SEAL 3-4 JET2	3-4
ER20 SEAL 4-5 JET2	4-5
ER20 SEAL 5-6 JET2	5-6
ER20 SEAL 6-7 JET2	6-7
ER20 SEAL 7-8 JET2	7-8
ER20 SEAL 8-9 JET2	8-9
ER20 SEAL 9-10 JET2	9-10
ER20 SEAL 10-11 JET2	10-11
ER20 SEAL 11-12 JET2	11-12
ER20 SEAL 12-13 JET2	12-13
ER25 SEAL 3-4 JET2	3-4
ER25 SEAL 4-5 JET2	4-5
ER25 SEAL 5-6 JET2	5-6
ER25 SEAL 6-7 JET2	6-7
ER25 SEAL 7-8 JET2	7-8
ER25 SEAL 8-9 JET2	8-9
ER25 SEAL 9-10 JET2	9-10
ER25 SEAL 10-11 JET2	10-11
ER25 SEAL 11-12 JET2	11-12
ER25 SEAL 12-13 JET2	12-13
ER25 SEAL 13-14 JET2	13-14
ER25 SEAL 14-15 JET2	14-15
ER25 SEAL 15-16 JET2	15-16

ER32-SEAL-JET2

(Unit: mm)

Cat. No.	Range
ER32 SEAL 3-4 JET2	3-4
ER32 SEAL 4-5 JET2	4-5
ER32 SEAL 5-6 JET2	5-6
ER32 SEAL 6-7 JET2	6-7
ER32 SEAL 7-8 JET2	7-8
ER32 SEAL 8-9 JET2	8-9
ER32 SEAL 9-10 JET2	9-10
ER32 SEAL 10-11 JET2	10-11
ER32 SEAL 11-12 JET2	11-12
ER32 SEAL 12-13 JET2	12-13
ER32 SEAL 13-14 JET2	13-14
ER32 SEAL 14-15 JET2	14-15
ER32 SEAL 15-16 JET2	15-16
ER32 SEAL 16-17 JET2	16-17
ER32 SEAL 17-18 JET2	17-18
ER32 SEAL 18-19 JET2	18-19
ER32 SEAL 19-20 JET2	19-20

ER40-SEAL-JET2

(Unit: mm)

Cat. No.	Range
ER40 SEAL 3-4 JET2	3-4
ER40 SEAL 4-5 JET2	4-5
ER40 SEAL 5-6 JET2	5-6
ER40 SEAL 6-7 JET2	6-7
ER40 SEAL 7-8 JET2	7-8
ER40 SEAL 8-9 JET2	8-9
ER40 SEAL 9-10 JET2	9-10
ER40 SEAL 10-11 JET2	10-11
ER40 SEAL 11-12 JET2	11-12
ER40 SEAL 12-13 JET2	12-13
ER40 SEAL 13-14 JET2	13-14
ER40 SEAL 14-15 JET2	14-15
ER40 SEAL 15-16 JET2	15-16
ER40 SEAL 16-17 JET2	16-17
ER40 SEAL 17-18 JET2	17-18
ER40 SEAL 18-19 JET2	18-19
ER40 SEAL 19-20 JET2	19-20
ER40 SEAL 20-21 JET2	20-21
ER40 SEAL 21-22 JET2	21-22
ER40 SEAL 22-23 JET2	22-23
ER40 SEAL 23-24 JET2	23-24
ER40 SEAL 24-25 JET2	24-25
ER40 SEAL 25-26 JET2	25-26

Sets & Kits

Page 120 - 121

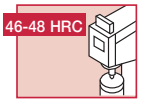

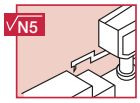

ER Collet

ER Spring Collet Sets

SET-ER SPR Spring Collet DIN6499 (Unit: mm)

Cat. No.	Pcs.	Range
SET ER11 SPR 7	7	0.5-7
SET ER16 SPR 10	10	0.5-10
SET ER20 SPR 12	12	1-13
SET ER25 SPR 15	15	1-16
SET ER32 SPR 18	18	2-20
SET ER40 SPR 23	23	3-26
SET ER50 SPR 12	12	10-34

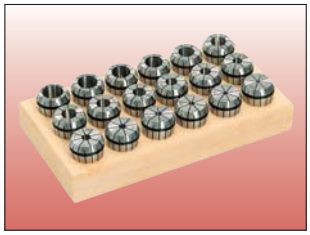

SET-ER-SPR-AA Spring Collet DIN6499 AA (Ultra Precision) (Unit: mm)

Cat. No.	Pcs.	Range
SET ER11 SPR 7 AA	7	0.5-7
SET ER16 SPR 10 AA	10	0.5-10
SET ER20 SPR 12 AA	12	1-13
SET ER25 SPR 15 AA	15	1-16
SET ER32 SPR 18 AA	18	2-20
SET ER40 SPR 23 AA	23	3-26

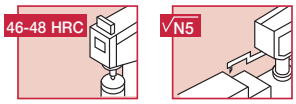

ER Coolit - Sealed Jet type Collet Sets

SET-ER-SEAL Collet DIN6499 (Unit: mm)

Cat. No.	Pcs.	Range
SET ER16 SEAL 7	7	3-10
SET ER20 SEAL 10	10	3-13
SET ER25 SEAL 13	13	3-16
SET ER32 SEAL 17	17	3-20
SET ER40 SEAL 23	23	3-26

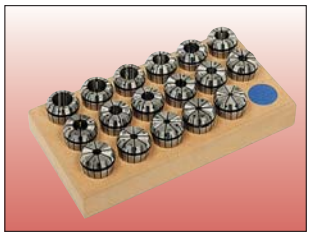

SET-ER-SEAL-JET2 Collet DIN6499 (External Coolant) (Unit: mm)

Cat. No.	Pcs.	Range
SET ER16 SEAL 7 JET2	7	3-10
SET ER20 SEAL 10 JET2	10	3-13
SET ER25 SEAL 13 JET2	13	3-16
SET ER32 SEAL 17 JET2	17	3-20
SET ER40 SEAL 23 JET2	23	3-26

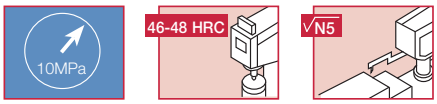

ER Spring Collet Sets DIN6499

SET ER SPR-EM (1) (Unit: mm)

Cat. No.	Pcs.	Collet Sizes
SET ER16 SPR 8 EM	8	3, 4, 5, 6, 7, 8, 9, 10
SET ER20 SPR 5 EM	5	4, 6, 8, 10, 12
SET ER25 SPR 6 EM	6	4, 6, 8, 10, 12, 16
SET ER32 SPR 6 EM	6	6, 8, 10, 12,16, 20
SET ER40 SPR 7 EM	7	6, 8, 10, 12, 16, 20, 25

(1) Contains popular endmill sizes only.

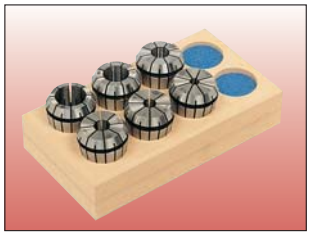

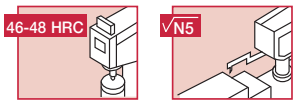

ER Coolit - Sealed type Jet Collet Sets (Internal Coolant)

SET-ER SEAL-EM (1) (Unit: mm)

Cat. No.	Pcs.	Collet Sizes
SET ER 16 SEAL 5 EM	5	4, 5, 6, 8, 10
SET ER 20 SEAL 5 EM	5	4, 6, 8, 10, 12
SET ER 25 SEAL 6 EM	6	4, 6, 8, 10, 12, 16
SET ER 32 SEAL 6 EM	6	6, 8, 10, 12, 16, 20
SET ER 40 SEAL 7 EM	7	6, 8, 10, 12, 16, 20, 25

(1) Contains popular endmill sizes only.

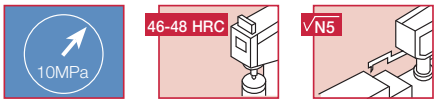

Tungaloy
Member IMC Group

ER Collet

ER Coolit - Sealed type Jet Collet Sets (External Coolant)

SET ER-SEAL-EM JET2 (1) (Unit: mm)

Cat. No.	Pcs.	Range
SET ER 16 SEAL 5 EM JET2	5	4, 5, 6, 8, 10
SET ER 20 SEAL 5 EM JET2	5	4, 6, 8, 10, 12
SET ER 25 SEAL 6 EM JET2	6	4, 6, 8, 10, 12, 16
SET ER 32 SEAL 6 EM JET2	6	6, 8, 10, 12, 16, 20
SET ER 40 SEAL 7 EM JET2	7	6, 8, 10, 12, 16, 20, 25

(1) Contains popular endmill sizes only.

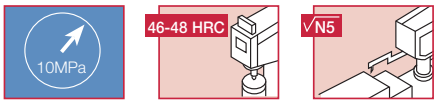

Taper Shank ER Collet type and Collet Kits

KIT (Unit: mm)

Cat. No.	Pcs.	Range
KIT R-8 10 ER16	10	0.5-10
KIT R-8 18 ER32	18	2-20
KIT R-8 23 ER40	23	3-26
KIT DIN2080 30 18 ER32	18	2-20
KIT DIN2080 40 18 ER32	18	2-20
KIT DIN2080 30 23 ER40	23	3-26
KIT DIN2080 40 23 ER40	23	3-26
KIT DIN2080 50 23 ER40	23	3-26
KIT DIN2080 40 12 ER50	12	10-34
KIT DIN2080 50 12 ER50	12	10-34
KIT MT3 18 ER32	18	2-20
KIT MT4 18 ER32	18	2-20
KIT MT4 23 ER40	23	3-26

Each kit contains one collet chuck, a full set of ER collets and a Wrench.

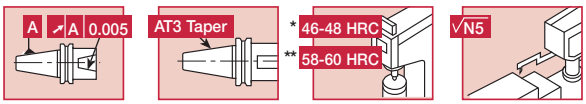

* Collet
** Toolholder

Straight Shank ER Collet type and Collet Kits

KIT ST-ER-Mini MINI Collet Chuck type DIN6499 (Unit: mm)

Cat. No.	Pcs.	Range
KIT ST12X80 7 ER11 M	7	0.5-7
KIT ST12X80 10 ER16 M	10	0.5-10
KIT ST16X50 7 ER11MF	7	0.5-7
KIT ST16X100 7 ER11M	7	0.5-7
KIT ST16X150 7 ER11 M	7	0.5-7
KIT ST20X100 10 ER16 M	10	0.5-10
KIT ST20X150 10 ER16 M	10	0.5-10
KIT ST20X100 12 ER20 M	12	1-12
KIT ST20X150 12 ER20 M	12	1-12

Each kit contains one collet chuck, a full set of ER collets and a Wrench
F indicates a flat on the shank.

KIT ST-ER Collet Chuck type DIN6499 (Unit: mm)

Cat. No.	Pcs.	Range
KIT ST 16X50 7 ER11 F	7	0.5-7
KIT ST 20X50 7 ER11 F	7	0.5-7
KIT ST 20X100 7 ER11	7	0.5-7
KIT ST 20X150 7 ER11	7	0.5-7
KIT ST 20X50 10 ER16 F	10	0.5-10
KIT ST 20X100 10 ER16	10	0.5-10
KIT ST 20X150 10 ER16	10	0.5-10
KIT ST 20X50 12 ER20 F	12	1-12
KIT ST 25X100 12 ER20	12	1-12

Each kit contains one collet chuck, a full set of ER collets and a Wrench
F indicates a flat on the shank.

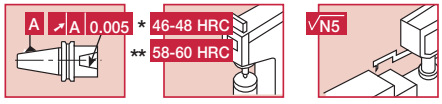

* Collet
** Toolholder

A SC-SPR

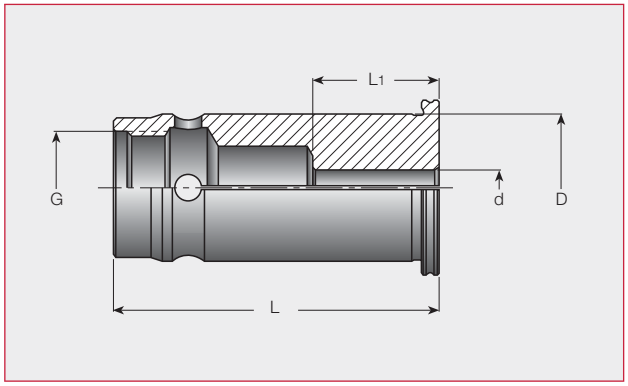

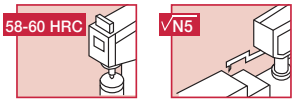

B SC-SEAL

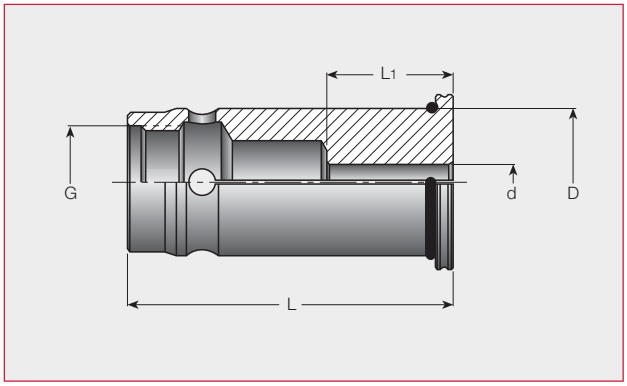

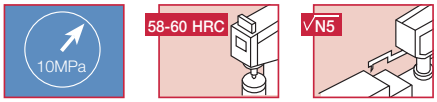

A SC-SPR SC Straight Collet - Metric

(Unit: mm)

Cat. No.	d	D	L	L1	G
SC 20 SPR 6	6	20	60	28	M16
SC 20 SPR 8	8	20	60	28	M16
SC 20 SPR 10	10	20	60	35	M16
SC 20 SPR 12	12	20	60	40	M16
SC 20 SPR 14	14	20	60	40	M16
SC 20 SPR 15	15	20	60	40	M16
SC 20 SPR 16	16	20	60	39	M16
SC 32 SPR 6	6	32	72	28	M24x1.5
SC 32 SPR 8	8	32	72	28	M24x1.5
SC 32 SPR 10	10	32	72	35	M24x1.5
SC 32 SPR 12	12	32	72	40	M24x1.5
SC 32 SPR 14	14	32	72	40	M24x1.5
SC 32 SPR 15	15	32	72	40	M24x1.5
SC 32 SPR 16	16	32	72	44	M24x1.5
SC 32 SPR 18	18	32	72	44	M24x1.5
SC 32 SPR 19	19	32	72	44	M24x1.5
SC 32 SPR 20	20	32	72	46	M24x1.5
SC 32 SPR 24	84	32	72	45	M24x1.5
SC 32 SPR 25	25	32	72	51	M24x1.5

B SC-SEAL SC Sealed Straight Collet - Metric

(Unit: mm)

Cat. No.	d	D	L	L1	G
SC 20 SEAL 6	6	20	60	28	M16
SC 20 SEAL 8	8	20	60	28	M16
SC 20 SEAL 10	10	20	60	35	M16
SC 20 SEAL 12	12	20	60	40	M16
SC 20 SEAL 14	14	20	60	40	M16
SC 20 SEAL 15	15	20	60	40	M16
SC 20 SEAL 16	16	20	60	39	M16
SC 32 SEAL 6	6	32	72	28	M24x1.5
SC 32 SEAL 8	8	32	72	28	M24x1.5
SC 32 SEAL 10	10	32	72	35	M24x1.5
SC 32 SEAL 12	12	32	72	40	M24x1.5
SC 32 SEAL 14	14	32	72	40	M24x1.5
SC 32 SEAL 15	15	32	72	40	M24x1.5
SC 32 SEAL 16	16	32	72	44	M24x1.5
SC 32 SEAL 18	18	32	72	44	M24x1.5
SC 32 SEAL 19	19	32	72	44	M24x1.5
SC 32 SEAL 20	20	32	72	46	M24x1.5
SC 32 SEAL 24	24	32	72	46	M24x1.5
SC 32 SEAL 25	25	32	72	51	M24x1.5

TUNGMAX • Collet for Power Chuck

A SC-SPR

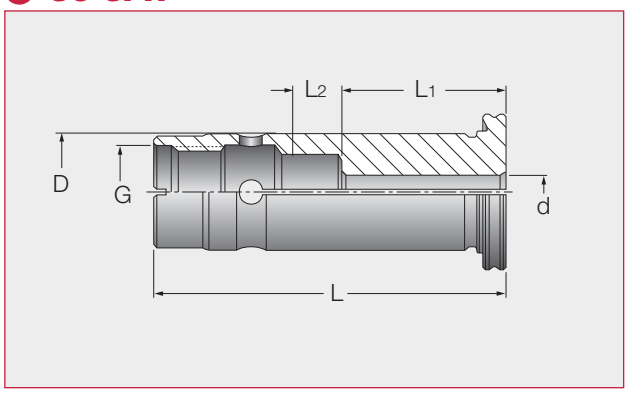

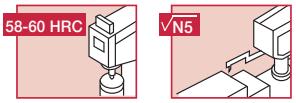

B SC-SEAL

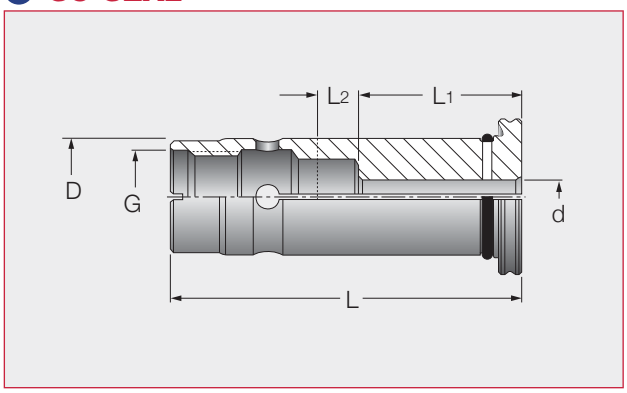

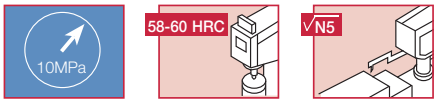

A SC-SPR SC Straight Collet - Inch

(Unit: inch)

Cat. No.	d	D	L	L1	L2	G
SC 3/4 SPR 1/4	0.25	0.75	2.362	1.102	0.276	M16
SC 3/4 SPR 5/16	0.313	0.75	2.362	1.102	0.276	M16
SC 3/4 SPR 3/8	0.375	0.75	2.362	1.378	0.512	M16
SC 3/4 SPR 7/16	0.438	0.75	2.362	1.102	0.315	M16
SC 3/4 SPR 1/2	0.5	0.75	2.362	1.102	0.276	M16
SC 3/4 SPR 5/8	0.625	0.75	2.362	1.543	0.354	M16
SC 1-1/4 SPR 1/4	0.25	1.25	2.835	1.102	0.689	M24x1.5
SC 1-1/4 SPR 5/16	0.313	1.25	2.835	1.102	0.689	M24x1.5
SC 1-1/4 SPR 3/8	0.375	1.25	2.835	1.378	0.413	M24x1.5
SC 1-1/4 SPR 1/2	0.5	1.25	2.835	1.575	0.217	M24x1.5
SC 1-1/4 SPR 5/8	0.625	1.25	2.835	1.732	0.709	M24x1.5
SC 1-1/4 SPR 3/4	0.75	1.25	2.835	1.811	0.63	M24x1.5
SC 1-1/4 SPR 7/8	0.875	1.25	2.835	1.969	0.453	M24X1.5
SC 1-1/4 SPR 1	1	1.25	2.835	2.008	0.409	M24x1.5

B SC-SEAL SC Sealed Straight Collet - Inch

(Unit: inch)

Cat. No.	d	D	L	L1	L2	G
SC 3/4 SEAL 1/4	0.25	0.75	2.362	1.102	0.276	M16
SC 3/4 SEAL 5/16	0.313	0.75	2.362	1.102	0.276	M16
SC 3/4 SEAL 3/8	0.375	0.75	2.362	1.378	0.512	M16
SC 3/4 SEAL 7/16	0.438	0.75	2.362	1.575	0.315	M16
SC 3/4 SEAL 1/2	0.5	0.75	2.362	1.575	0.315	M16
SC 3/4 SEAL 5/8	0.625	0.75	2.362	1.543	0.354	M16
SC 1-1/4 SEAL 1/4	0.25	1.25	2.835	1.102	0.689	M24X1.5
SC 1-1/4 SEAL 5/16	0.313	1.25	2.835	1.102	0.689	M24X1.5
SC 1-1/4 SEAL 3/8	0.375	1.25	2.835	1.378	0.413	M24X1.5
SC 1-1/4 SEAL 1/2	0.5	1.25	2.835	1.575	0.217	M24X1.5
SC 1-1/4 SEAL 5/8	0.625	1.25	2.835	1.732	0.709	M24X1.5
SC 1-1/4 SEAL 3/4	0.75	1.25	2.835	1.811	0.63	M24X1.5
SC 1-1/4 SEAL 7/8	0.875	1.25	2.835	1.969	0.453	M24X1.5
SC 1-1/4 SEAL 1	1	1.25	2.835	2.008	0.453	M24X1.5

Note: Size table is inch.

TUNGMAX • Preset Screw for Power Chuck

SC-SPR

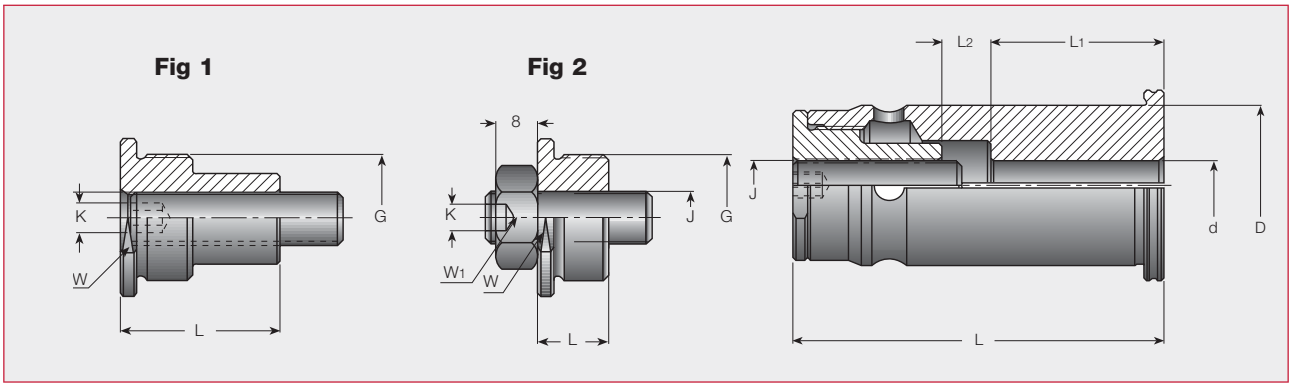

PRESET SC CAP Preset Screw for SC Collets (Power Chuck)

(Unit: mm)

Cat. No.	L	W	J	G	Fig	Collet Range	Wrench	Collet Size
PRESET SC CAP 8x1.25L	28	16	M8x25	M16	1	6-8	4	SC20
PRESET SC CAP 8x1.25	15	16	M8x25	M16	2	10-16	4	
PRESET SC CAP 10x1.5L	30.0	27	M10x30	M24x1.5	1	6-14	5	SC20
PRESET SC CAP 10x1.5	13.5	27	M10x30	M24x1.5	2	16-25	5	

TUNGHYDRO • Kits

KIT HYDRO

KIT HYDRO Hydraulic Chuck Kits

(Unit: mm)

Cat. No.	SC HYDRO Collets	Pcs.	Collet Range
KIT BT 40 HYDRO 20X 73	SC 20 S HYDRO	5	8, 10, 12, 14, 16
KIT BT 40 HYDRO 32X110	SC 32 S HYDRO	7	6, 8, 10, 12, 16, 20, 25
KIT DIN69871 40 HYDRO 20X 65	SC 20 S HYDRO	5	8, 10, 12, 14, 16
KIT DIN69871 40 HYDRO 32X117	SC 32 S HYDRO	7	6, 8, 10, 12, 16, 20, 25
KIT HSK A 63 HYDRO 20X100	SC 20 S HYDRO	5	8, 10, 12, 14, 16
KIT HSK A 63 HYDRO 32X125	SC 32 S HYDRO	7	6, 8, 10, 12, 16, 20, 25

Each kit contains one HYDROFIT chuck, a set of SC...HYDRO sealed reducers and a clamping wrench.

Tungaloy
Member IMC Group

SC HYDRO

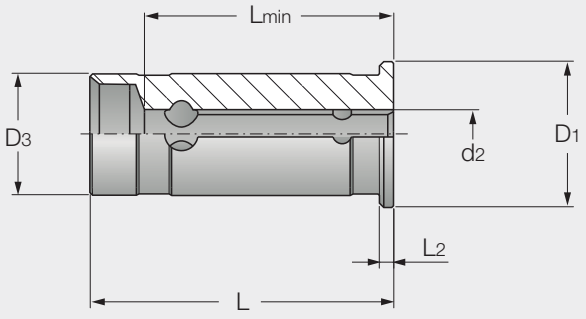

SC-HYDRO Sealed SC Collet (Reduction Sleeves)

(Unit: mm)

Cat. No.	d_2	L_{min}	D_3	L	D_1	L_2
SC 12 S HYDRO 3	3	19				
SC 12 S HYDRO 4	4	24				
SC 12 S HYDRO 5	5	28	12	46.5	16	2
SC 12 S HYDRO 6	6	33				
SC 12 S HYDRO 8	8	39				
SC 20 S HYDRO 3	3	20				
SC 20 S HYDRO 4	4	25				
SC 20 S HYDRO 5	5	27				
SC 20 S HYDRO 6	6	34				
SC 20 S HYDRO 8	8	39	20	53	24	2
SC 20 S HYDRO 10	10	40				
SC 20 S HYDRO 12	12	41				
SC 20 S HYDRO 14	14	44				
SC 20 S HYDRO 16	16	44				
SC 25 S HYDRO 6	6	37				
SC 25 S HYDRO 8	8	37				
SC 25 S HYDRO 10	10	40				
SC 25 S HYDRO 12	12	44	25	60	30	4
SC 25 S HYDRO 14	14	46				
SC 25 S HYDRO 16	16	48				
SC 25 S HYDRO 18	18	50				
SC 25 S HYDRO 20	20	50				
SC 32 S HYDRO 6	6	33				
SC 32 S HYDRO 8	8	38				
SC 32 S HYDRO 10	10	39				
SC 32 S HYDRO 12	12	42				
SC 32 S HYDRO 14	14	44	32	66	40	4
SC 32 S HYDRO 16	16	44				
SC 32 S HYDRO 18	18	44				
SC 32 S HYDRO 20	20	49				
SC 32 S HYDRO 25	25	66				

PRESET SCREW HYDRO

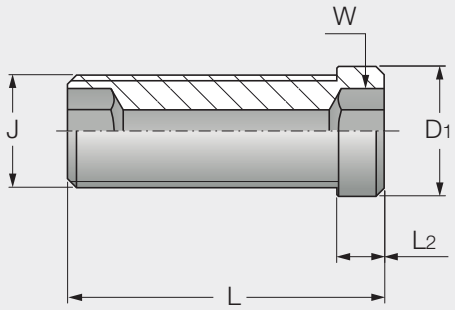

PRESET SCREW HYDRO Hydraulic Chuck Preset Screws

(Unit: mm)

Cat. No.	J	D_1	L	L_2	W	Used for Shanks
PRESET SCREW HYDRO M5	M5	5	14	1	2.5	6
PRESET SCREW HYDRO M6	M6	6	14	1.5	3	8
PRESET SCREW HYDRO M8	M8X1	8	14	2	4	10
PRESET SCREW HYDRO M10	M10X1	10	17	2	5	12, 14
PRESET SCREW HYDRO M12	M12X1	12	17	2	6	16, 18, 20
PRESET SCREW HYDRO M16	M16X1	14	20	2	8	20, 25, 32

TEST BAR HYDRO

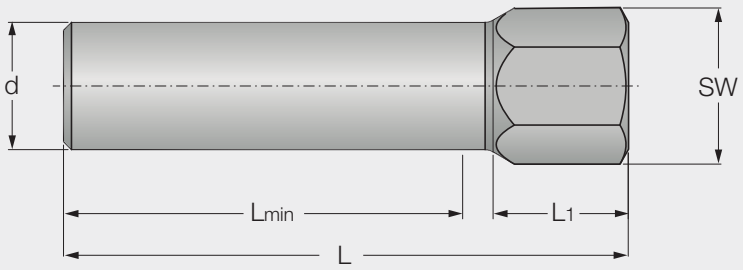

TEST BAR HYDRO Torque Test Bars for Hydraulic Chucks

(Unit: mm)

Cat. No.	d^{h6}	L	L_1	SW	Clamping Torque N·m	L_{min} (1)
TEST BAR HYDRO 6	6	53	42	10	15	27
TEST BAR HYDRO 8	8	53	42	10	25	27
TEST BAR HYDRO 10	10	56	45	10	50	32
TEST BAR HYDRO 12	12	62	51	10	110	37
TEST BAR HYDRO 14	14	62	51	10	120	37
TEST BAR HYDRO 16	16	71	54	17	180	37
TEST BAR HYDRO 18	18	71	54	17	230	42
TEST BAR HYDRO 20	20	71	55	17	250	42
TEST BAR HYDRO 25	25	79	61	17	310	48
TEST BAR HYDRO 32	32	87	65	17	450	52

(1) Minimum holding length.

Tungaloy Member IMC Group

Accurate Hydraulic Chucking System

3µ

High Accuracy and Repeatability

TUNGHYDRO

TUNGALOY

TUNGHYDRO is expanding its toolholder clamping options by adding hydraulic chucks. The new hydraulic chucks range from 6-32 mm. This type of chucking system is used for rotating and stationary applications.

Main applications

- Fine and accurate machining
- Reaming
- Drilling
- Finish milling
- Internal turning

Features

- High runout accuracy of less than 0.003 mm
- Very low torque required to activate the clamping mechanism, by using a 4 mm Allen key
- Prolongs cutting tool life and improves surface finish due to vibration damping
- Easy presetting by using an internal preset screw
- All rotating chucks feature a symmetrical and balanced design for high speed machining of up to 15,000 min^{-1}
- Available with threaded holes for fine balancing
- Consistent and secure clamping force when used within the recommended speed range
- Suitable for both Weldon and cylindrical shank clamping
- Very convenient and safe tool change on the machine

Two main TUNGHYDRO chuck types are available:

- Taper shanks for rotating applications
- VDI DIN 69880 in sizes 30 and 40 for stationary applications on CNC lathes

Tungaloy
Member IMC Group

Hydraulic Chucks System

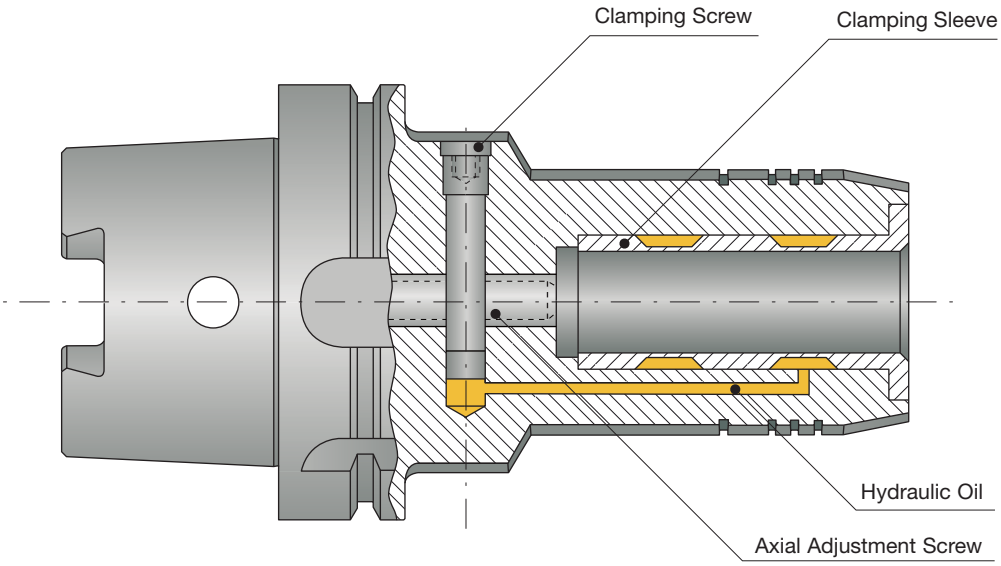

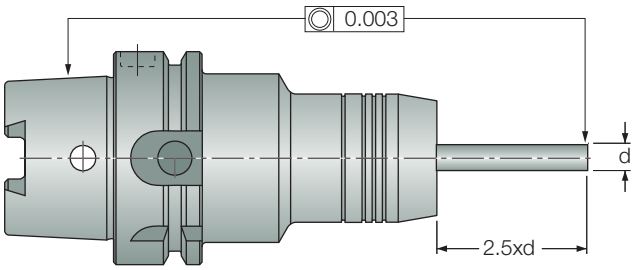

Operating Instructions

To ensure correct functioning of the hydraulic chuck, the following instructions should be followed:

Tools with cylindrical shanks in accordance with DIN 1835 and DIN 6535 shape (HA) and B (HB) up to 20 mm diameters should be manufactured according to h6 tolerance and Ra_{min} = 0.3 ground.
Tools with DIN 6535 HE (whistle notch) shanks should be used in reduction elements, to avoid damaging the chucking hole.

- Clean any grease and dirt from the chuck mounting hole and the tool shank. Insert the tool shank up to the stopper. Make sure that the minimum chucking length is maintained.
- Using the hexagonal-headed key, rotate the clamping screw in a clockwise direction until the end. Do not attempt to clamp the chuck without a shank inside as it may break the expansion clamping sleeve.
- To release the tool, turn the clamping screw in a counterclockwise direction by about 5 or 6 revolutions and remove the tool.

MAX Kits • TUNGMAX

Max Kit

(Unit: mm)

Cat. No.	SC-SPR	Pcs.	Collet Range
KIT SK40 MAXIN 20X95 6	SC 20	6	6,8,10,12,14,16
KIT SK40 MAXIN 32X106 7	SC 32	7	6,8,10,12,16,20,25
KIT SK50 MAXIN 20X105 6	SC 20	6	6,8,10,12,14,16
KIT SK50 MAXIN 32X100 7	SC 32	7	6,8,10,12,16,20,25
KIT HSK A 63 MAXIN20X95 6	SC 20	6	6,8,10,12,14,16
KIT HSK A 63MAXIN32X113 7	SC 32	7	6,8,10,12,16,20,25
KIT HSK A100MAXIN20X115 6	SC 20	6	6,8,10,12,14,16
KIT HSK A100MAXIN32X106 7	SC 32	7	6,8,10,12,16,20,25
KIT BT40 MAXIN 20X85 6	SC 20	6	6,8,10,12,14,16
KIT BT40 MAXIN 32X108 7	SC 32	7	6,8,10,12,16,20,25
KIT BT50 MAXIN 20X105 6	SC 20	6	6,8,10,12,14,16
KIT BT50 MAXIN 32X106 7	SC 32	7	6,8,10,12,16,20,25

SET SC-SPR, SEAL SC Collet Set (for TungMAX)

(Unit: inch)

Cat. No.	SC-SPR	Pcs.	Collet Range
KIT CAT40 MAXIN 1-1/4 7	SC 1-1/4	7	0.25,0.313,0.375,0.5,0.625,0.75,1
KIT CAT40 MAXIN3/4X3.75 6	SC 3/4	6	0.25,0.313,0.375,0.438,0.5,0.625
KIT CAT50 MAXIN 1-1/4 7	SC 1-1/4	7	0.25,0.313,0.375,0.5,0.625,0.75,1
KIT CAT50 MAXIN3/4X4.13 6	SC 3/4	6	0.25,0.313,0.375,0.438,0.5,0.625

Note: Size table is inch.

Each kit contains one power chuck, a set of SC-SPR collets, extracting hook and a Wrench.

SET SC-SPR, SEAL SC Collet Set (for TungMAX)

(Unit: mm)

Cat. No.	Pcs.	Collet Range
SET SC20 SPR 6	6	6, 8, 10, 12, 14, 16
SET SC32 SPR 9	9	6, 8, 10, 12, 14, 16, 18, 20, 25
SET SC20 SEAL 6	6	6, 8, 10, 12, 14, 16
SET SC32 SEAL 9	9	6, 8, 10, 12, 14, 16, 18, 20, 25

ER Collet • TUNGFLEX

ER-ODP

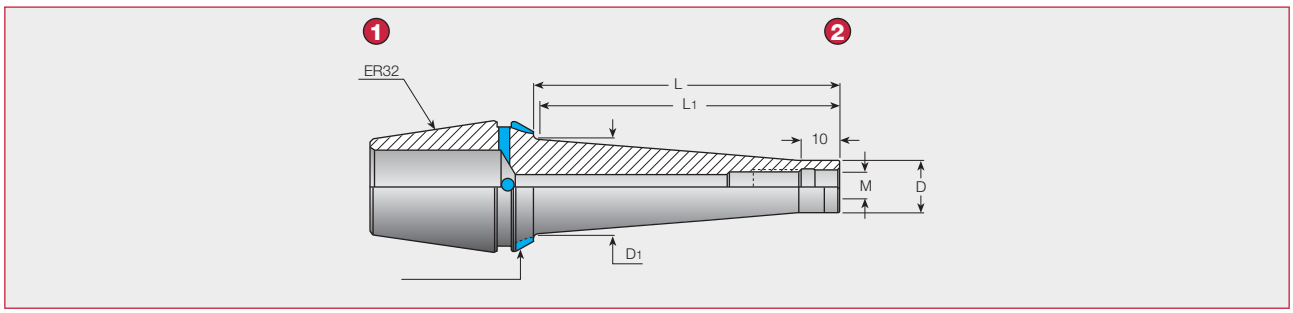

1 ER Collet
2 TungFlex

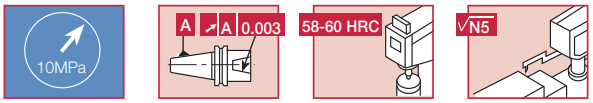

ER-ODP ER Collet with Indexable Modular System

(Unit: mm)

Cat. No.	M	D	D_1	L	L_1
ER32 ODP M 6X25	M6	9.8	14	25	22
ER32 ODP M 6X50	M6	9.8	20	50	48
ER32 ODP M 6X75	M6	9.8	23	75	74
ER32 ODP M 8X25	M8	13.1	15	25	22
ER32 ODP M 8X50	M8	13.1	23	50	49
ER32 ODP M 8X75	M8	13.1	23	75	74
ER32 ODP M10X25	M10	18.0	20	25	23
ER32 ODP M10X50	M10	18.0	24	50	49
ER32 ODP M12X25	M12	21.0	24	25	24
ER32 ODP M12X50	M12	21.0	24	50	49

Tungaloy
Member IMC Group

Thermal Shrink Chucking System

TUNGSHRINK Thermal Shrink ER Collet Chucking System is an enhancement to the existing popular ER system.
The SHRINK collets utilize the thermal shrink phenomenon for rigid clamping of solid carbide cutters. This new system provides higher torque, precision runout and better repeatability. The SHRINK collets with their slim design and various projection lengths allow the user to reach into deeper shaped cavities and perform narrow milling applications.
Tungaloy offers a complete system for SHRINK ER collets, including a uniquely designed heating unit with a portable heating handle. The s is equipped with
a high-tech temperature control for easy and practical use at the machining center or in the tool room.

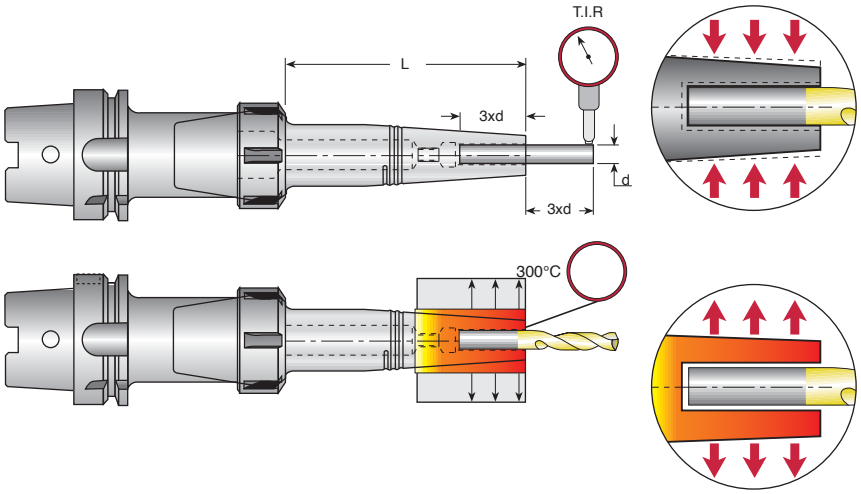

L (mm)	Max T.I.R
35	7 µm
60	9 µm
85	10 µm

Features:

- Slim design with various projections
- Flexible - fits into standard ER chucks
- High torque transfer
- Rigid clamping of carbide tools
- Precision runout
- Perfect repeatability
- Vibration damping
- Internal coolant
- Coolant JET2 available
- Symmetrical design for high speed machining
- Quick and easy tool changing
- Unique SHRINK heating unit with portable handle

Thermal Shrink Chucking System

Standard ER Collet Chuck

☐HSK (32, 40, 50, 63, 100)

SHRINK ER ColletCompatible with Standard ER Collets DIN 6499

☐ ER20
☐ ER25
☐ ER32

☐ DIN69871 (30, 40, 50)

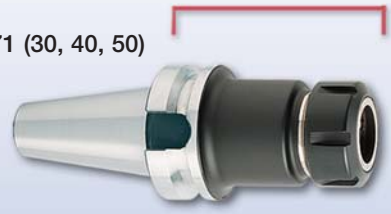

☐ BT, CAT (30, 40, 50)

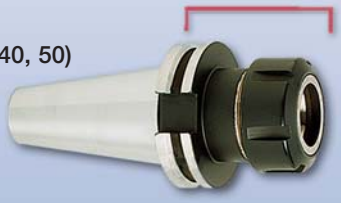

☐ DIN2080 (30, 40, 50)

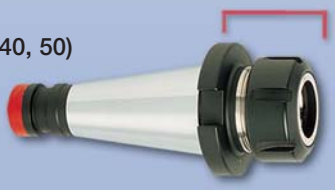

SHORTIN
☐ DIN69871 (40, 50)
☐ HSK (63, 100)
☐ BT (30, 40, 50)
☐ CAT (40, 50)

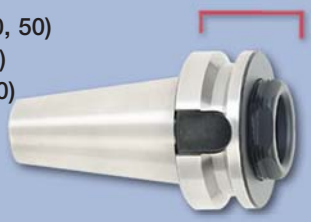

☐ HSK-SRK, SRKIN

☐ DIN69871-SRK, SRKIN
☐ BT-SRK, SRKIN
☐ CAT-SRK, SRKIN

Tungaloy
Member IMC Group

ER20, ER25-SHRINK

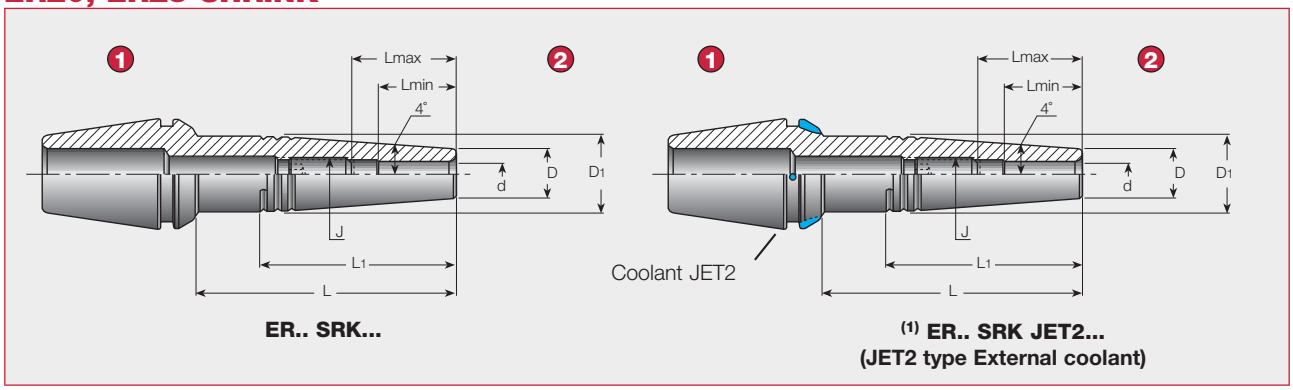

1 **DIN6499**
2 **TungShrink**

(1)

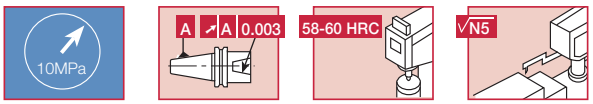

ER20, ER25-SHRINK SHRINK ER Collet SRK type (DIN6499) - Metric

(Unit: mm)

Cat. No.	d	L	L1	Lmin	Lmax	D1	D	J	Wrench
ER20 SRK 3X35	3.00	35.00	24.5	10.0	16.00	13.5	10.0	M6	3
ER20 SRK 3X60	3.00	60.00	24.5	10.0	16.00	13.5	10.0	M6	3
ER20 SRK 4X35	4.00	35.00	24.5	12.0	18.00	13.5	10.0	M6	3
ER20 SRK 4X60	4.00	60.00	24.5	12.0	18.00	13.5	10.0	M6	3
ER20 SRK 5X35	5.00	35.00	24.5	15.0	21.00	13.5	10.0	M6	3
ER20 SRK 5X60	5.00	60.00	24.5	15.0	21.00	13.5	10.0	M6	3
ER20 SRK 6X35	6.00	35.00	25.5	18.0	24.00	14.7	11.0	M8	4
ER20 SRK 6X60	6.00	60.00	29.5	18.0	24.00	15.2	11.0	M8	4
ER25 SRK 3X35	3.00	35.00	24.5	10.0	16.00	13.5	10.0	M6	3
ER25 SRK 3X60	3.00	60.00	44.5	10.0	16.00	16.3	10.0	M6	3
ER25 SRK 4X35	4.00	35.00	24.5	12.0	18.00	13.5	10.0	M6	3
ER25 SRK 4X60	4.00	60.00	44.5	12.0	18.00	16.3	10.0	M6	3
ER25 SRK 5X35	5.00	35.00	24.5	15.0	21.00	13.5	10.0	M6	3
ER25 SRK 5X60	5.00	60.00	44.5	15.0	21.00	16.3	10.0	M6	3
ER25 SRK 6X35	6.00	35.00	26.0	18.0	24.00	14.7	11.0	M8	4
ER25 SRK 6X60	6.00	60.00	44.5	18.0	24.00	17.3	11.0	M8	4
ER25 SRK 8X35	8.00	35.00	26.5	25.0	30.00	17.8	14.0	M10	5
ER25 SRK 8X60	8.00	60.00	39.5	25.0	31.00	19.7	14.0	M10	5

(1) For JET2 collet, add JET2 to the designations (i.e. ER25 SRK 8x35 JET2).

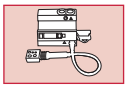
Thermal

Induction

User Guide

Page ☞ 138 136 131

ER32-SHRINK

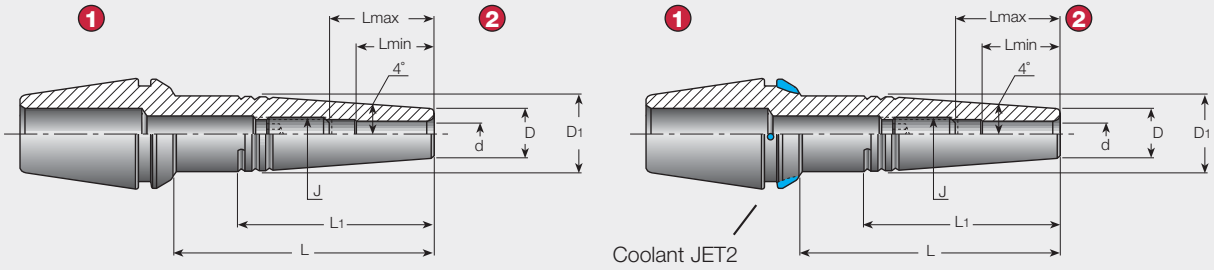

ER32 SRK...

(1) ER32 SRK JET2...
(JET2 type External coolant)

1 DIN6499
2 TungShrink

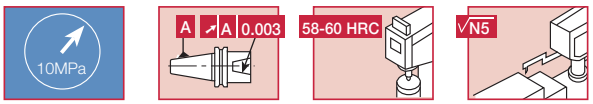

ER32-SHRINK SHRINK ER Collet SRK type (DIN6499) - Metric

(Unit: mm)

Cat. No.	d	L	L1	Lmin	Lmax	D1	D	J	Wrench
ER32 SRK 3X35	3.00	35.00	22.5	10.0	16.00	13.2	10.0	M6	3
ER32 SRK 3X60	3.00	60.00	44.5	10.0	16.00	16.3	10.0	M6	3
ER32 SRK 3X85	3.00	85.00	70.0	10.0	16.00	19.8	10.0	M6	3
ER32 SRK 4X35	4.00	35.00	23.5	12.0	18.00	13.4	10.0	M6	3
ER32 SRK 4X60	4.00	60.00	44.5	12.0	18.00	16.3	10.0	M6	3
ER32 SRK 4X85	4.00	85.00	70.0	12.0	18.00	19.8	10.0	M6	3
ER32 SRK 5X35	5.00	35.00	24.5	15.0	21.00	13.5	10.0	M6	3
ER32 SRK 5X60	5.00	60.00	44.5	15.0	21.00	16.3	10.0	M6	3
ER32 SRK 5X85	5.00	85.00	70.0	15.0	21.00	19.8	10.0	M6	3
ER32 SRK 6X35	6.00	35.00	25.5	18.0	24.00	14.7	11.0	M8	4
ER32 SRK 6X60	6.00	60.00	45.0	18.0	24.00	17.3	11.0	M8	4
ER32 SRK 6X85	6.00	85.00	69.5	18.0	26.00	20.8	11.0	M8	4
ER32 SRK 8X35	8.00	35.00	33.0	25.0	31.00	18.8	14.0	M10	5
ER32 SRK 8X60	8.00	60.00	45.0	25.0	31.00	20.4	14.0	M10	5
ER32 SRK 8X85	8.00	85.00	65.0	25.0	31.00	23.2	14.0	M10	5
ER32 SRK 10X35	10.00	35.00	34.0	30.0	35.00	20.8	16.0	M12	6
ER32 SRK 10X60	10.00	60.00	44.5	30.0	36.00	22.4	16.0	M12	6
ER32 SRK 10X85	10.00	85.00	49.5	30.0	36.00	23.0	16.0	M12	6
ER32 SRK 12X35	12.00	35.00	28.0	32.0	-	24.0	20.0	-	-
ER32 SRK 12X60	12.00	60.00	28.0	32.0	38.00	24.0	20.0	M14	6
ER32 SRK 12X85	12.00	85.00	28.0	32.0	38.00	24.0	20.0	M14	6

(1) For JET2 collet, add JET2 to the designations (i.e. ER32 SRK12X85JET2).

Page
Thermal 138
Induction 136
User Guide 131

TUNGSHRINK • Collet for Shrink

ER-SHRINK

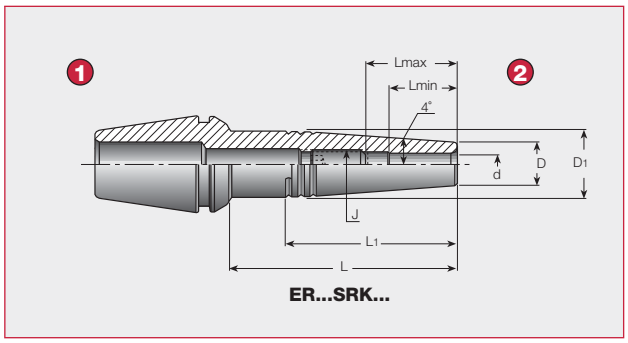

ER...SRK...

ER-SHRINK-JET2

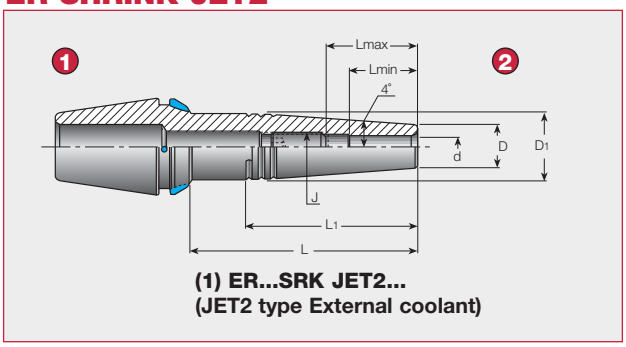

(1) ER...SRK JET2...
(JET2 type External coolant)

1 DIN6499
2 TungShrink

(1)

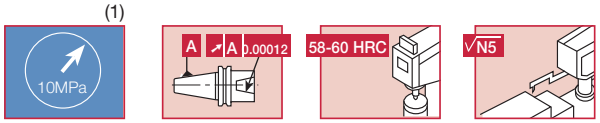

ER-SHRINK SHRINK ER Collet SRK type (DIN6499) - Inch

(Unit: inch)

Cat. No.	d	L	L1	Lmin	Lmax	D1	D	J	Wrench
ER20 SRK 1/8X1.500	0.125	1.5	0.97	0.39	0.63	0.53	0.394	M6	0.118
ER20 SRK 1/8X2.500	0.125	2.5	0.97	0.39	0.63	0.53	0.394	M6	0.118
ER25 SRK 1/8X1.500	0.125	1.5	1.11	0.39	0.63	0.55	0.394	M6	0.118
ER25 SRK 1/8X2.500	0.125	2.5	1.71	0.39	0.63	0.63	0.394	M6	0.118
ER32 SRK 1/8X1.500	0.125	1.5	1.1	0.39	0.63	0.55	0.394	M6	0.118
ER32 SRK 1/8X2.500	0.125	2.5	2	0.39	0.63	0.68	0.394	M6	0.118
ER32 SRK 1/8X3.500	0.125	3.5	3	0.39	0.63	0.82	0.394	M6	0.118
ER20 SRK 3/16X2.500	0.187	2.5	0.97	0.59	0.83	0.53	0.394	M6	0.118
ER20 SRK 3/16X1.500	0.187	1.5	0.97	0.59	0.83	0.53	0.394	M6	0.118
ER25 SRK 3/16X1.500	0.187	1.5	1.11	0.59	0.83	0.55	0.394	M6	0.118
ER25 SRK 3/16X2.500	0.187	2.5	1.71	0.59	0.83	0.63	0.394	M6	0.118
ER32 SRK 3/16X1.500	0.187	1.5	1.11	0.59	0.83	0.55	0.394	M6	0.118
ER32 SRK 3/16X2.500	0.187	2.5	1.9	0.59	0.83	0.66	0.394	M6	0.118
ER32 SRK 3/16X3.500	0.187	3.5	2.9	0.59	0.83	0.8	0.394	M6	0.118
ER20 SRK 1/4X1.500	0.25	1.5	1.14	0.71	0.95	0.59	0.433	M8	0.157
ER20 SRK 1/4X2.500	0.25	2.5	1.31	0.71	0.95	0.62	0.433	M8	0.157
ER25 SRK 1/4X1.500	0.25	1.5	1.14	0.71	0.95	0.59	0.433	M8	0.157
ER25 SRK 1/4X2.500	0.25	2.5	1.9	0.71	0.95	0.7	0.433	M8	0.157
ER32 SRK 1/4X1.500	0.25	1.5	1.14	0.71	0.95	0.59	0.433	M8	0.157
ER32 SRK 1/4X2.500	0.25	2.5	1.91	0.71	0.97	0.7	0.433	M8	0.157
ER32 SRK 1/4X3.500	0.25	3.5	2.9	0.71	1.02	0.84	0.433	M8	0.157
ER32 SRK 5/16X1.500	0.313	1.5	1.44	0.98	1.22	0.76	0.551	M1	0.197
ER32 SRK 5/16X2.500	0.313	2.5	1.91	0.98	1.22	0.82	0.551	M10	0.197
ER32 SRK 5/16X3.500	0.313	3.5	2.71	0.98	1.22	0.93	0.551	M10	0.197
ER25 SRK 5/16X1.500	0.313	1.5	1.08	0.98	1.22	0.71	0.551	M10	0.197
ER25 SRK 5/16X2.500	0.313	2.5	1.71	0.98	1.22	0.79	0.551	M10	0.197
ER32 SRK 3/8X1.500	0.375	1.5	1.46	1.18	1.38	0.84	0.629	M12	0.236
ER32 SRK 3/8X2.500	0.375	2.5	1.9	1.18	1.42	0.9	0.629	M12	0.236
ER32 SRK 3/8X3.500	0.375	3.5	2.12	1.18	1.42	0.93	0.629	M12	0.236
ER32 SRK 7/16X1.500	0.437	1.5	1.11	1.22	1.42	0.94	0.787	M14	0.236
ER32 SRK 7/16X2.500	0.437	2.5	1.11	1.22	1.46	0.94	0.787	M14	0.236
ER32 SRK 7/16X3.500	0.437	3.5	1.11	1.22	1.46	0.94	0.787	M14	0.236
ER32 SRK 1/2X1.500	0.5	1.5	1.1	1.26	1.46	0.94	0.787	M14	0.236
ER32 SRK 1/2X2.500	0.5	2.5	1.1	1.26	1.5	0.94	0.787	M14	0.236
ER32 SRK 1/2X3.500	0.5	3.5	1.41	1.26	1.5	0.94	0.787	M14	0.236

(1) For JET2 collet, add JET2 to the designations (i.e. ER32 SRK1/2X3,500 JET2).

Note: Size table is inch.

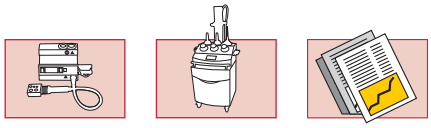

Page ☞ Thermal 138 | Induction 136 | User Guide 131

Induction Heating Unit

- Easy and efficient to operate
- Quick tool changing (5 sec.)
- Short cooling time (30 sec.)
- Range of Shank
  Solid carbide range 3-32 mm
  H.S.S. cutter range 6-32 mm

Suitable for:

- Integral tooling
- Integral heavy duty tooling
- Extensions
- ER..SRK... unique collets

Technical Specifications:

Clamping range	3 ~ 32 mm	Carbide tool shank
Clamping range	6 ~ 32 mm	HSS & steel shank
Main power supply	3 x 380 ~ 500 V, 50 / 60 Hz	
Nominal power	10 kW	
Nominal current	16 AMP	
Cooling unit power supply	220 V, 50 / 60 Hz	
Nominal power	0.5 kW	
Max. tool length	440 mm (from gauge line)	
Max. dia. clamping chuck	52 mm	
Effective induction field length	45 mm	
Expansion time	approx. 5 ~ 12 seconds	
Cooling time	approx. 50 ~ 90 seconds	
Weight	150 kg	
Overall dimensions	1700 x 730 x 600 mm	

SHRINK Thermal Electrical Unit

Cat. No.
IND SHRINKIN UNIT EUR

Includes:
Induction unit
Cooling unit
Trolley
Three Tool Adapter[1]

Cooling Sleeves	Used for
IND COOLING COLLET 6-8 IND COOLING COLLET 10-12 IND COOLING COLLET 14-16 IND COOLING COLLET 18-20	SRKIN
IND COOLING COLLET ER 3-5 IND COOLING COLLET ER 6 IND COOLING COLLET ER 8 IND COOLING COLLET ER 10 IND COOLING COLLET ER 12	SRK

Optional Tool Adapter for HSK
IND 32 TOOL ADAPTER
IND 40 TOOL ADAPTER
IND 50 TOOL ADAPTER [1]
IND 63 TOOL ADAPTER
IND 80 TOOL ADAPTER

[1] For taper #30

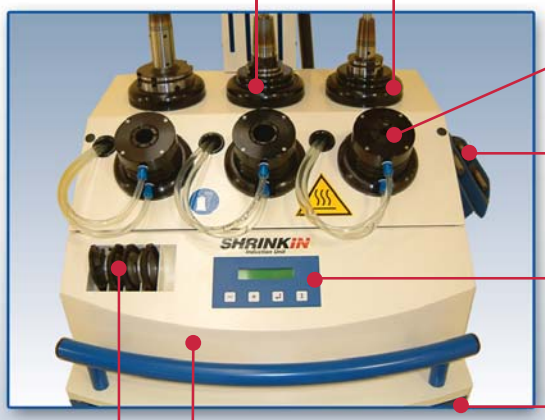

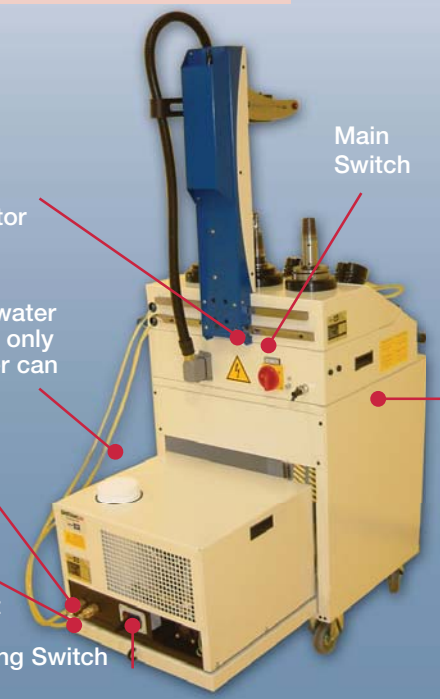

INDUCTION Starter Unit

The induction starter unit is an economical starter version of the SHRINK induction unit.
It was designed to help the enduser to purchase the modern shrink chucking technology in a low cost device.
The starter unit is actually a simplified and limited version of the complete inductive system that we offer today:

Induction Starter Unit Cat. No. :

4505585 IND SHRINK START UNIT EUR

Thermal Heating Unit
V2 Version

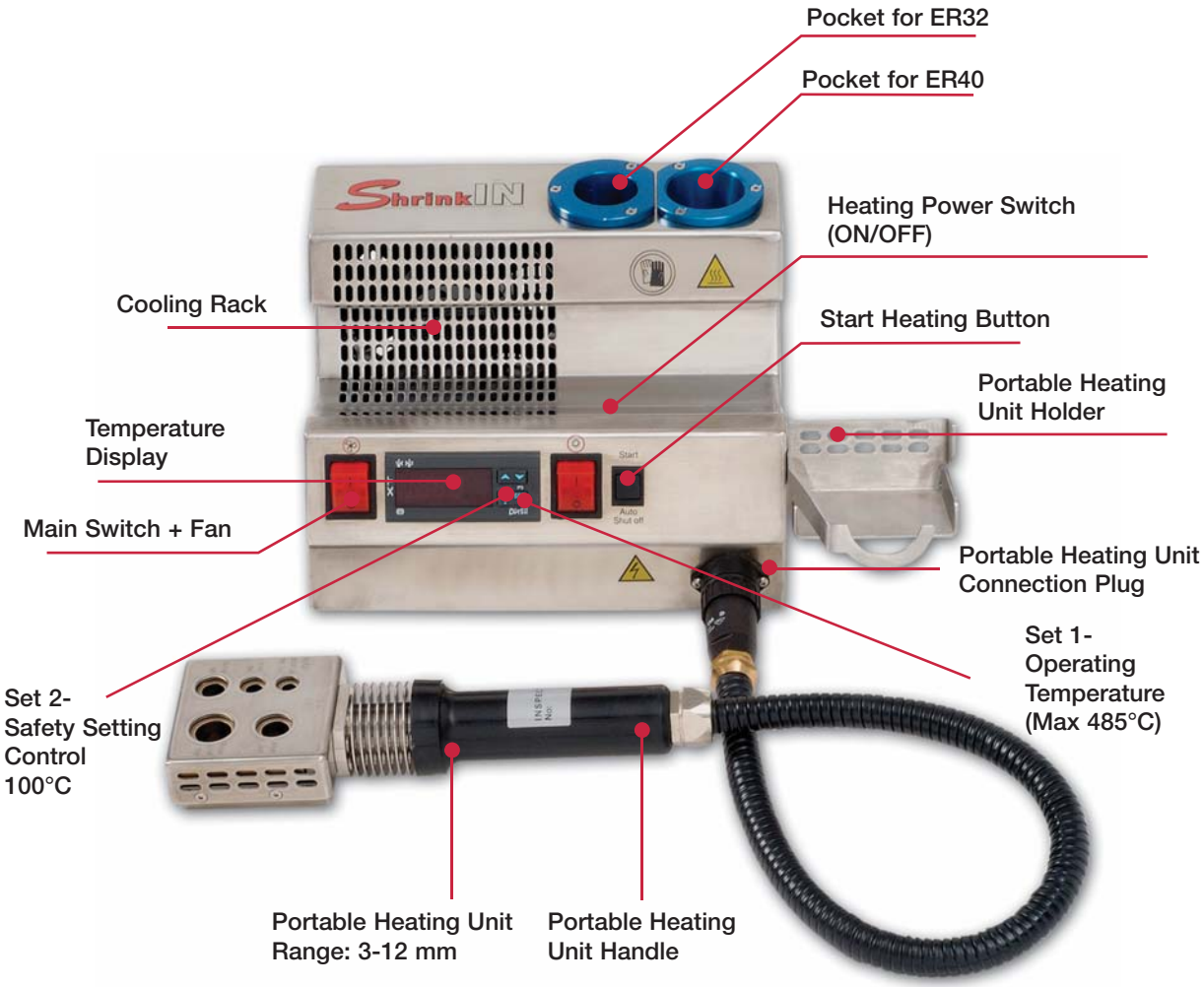

SHRINK Thermal Electric Unit

Cat. No.
SHRINKIN UNIT V2 EUR

220V 50/60 HZ

Portable Heating Unit Handle

Cat. No.
HEATING HANDLE 220V V2
(1) HEATING HANDLE 16/220V
(1) HEATING HANDLE 20/220V

(1) Optional

Important Note: This thermal heating unit can be used only for heating ER.. SRK and ER.. SRF collets.

Tungaloy Member IMC Group

SHRINK ER 32 Collet Sets and Kits

ER32 SHRINK Set6 Collets (4-12)

(Unit: mm)

Cat. No.	Collet Size
SET ER32 SRK S 6 EUR	4, 5, 6, 8, 10, 12
SET ER32 SRK M 6 EUR	4, 5, 6, 8, 10, 12
SET ER32 SRK L 6 EUR	4, 5, 6, 8, 10, 12

(Unit: inch)

Cat. No.	Collet Size
SET ER32 SRK S 6 USA	0.187, 0.25, 0.312, 0.375, 0.437, 0.5
SET ER32 SRK M 6 USA	0.187, 0.25, 0.312, 0.375, 0.437, 0.5
SET ER32 SRK L 6 USA	0.187, 0.25, 0.312, 0.375, 0.437, 0.5

Note: Size table is inch.

SHRINK Thermal Electric Unit Kit with ER32 SHRINK 6 Piece Collet Set (4-12)

(Unit: mm)

Cat. No.	Power Suppl	Collet Size
KIT SHRINKIN S V2 EUR	220V 50/60 Hz	4, 5, 6, 8, 10, 12
KIT SHRINKIN M V2 EUR	220V 50/60 Hz	4, 5, 6, 8, 10, 12
KIT SHRINKIN L V2 EUR	220V 50/60 Hz	4, 5, 6, 8, 10, 12

ER-SRF

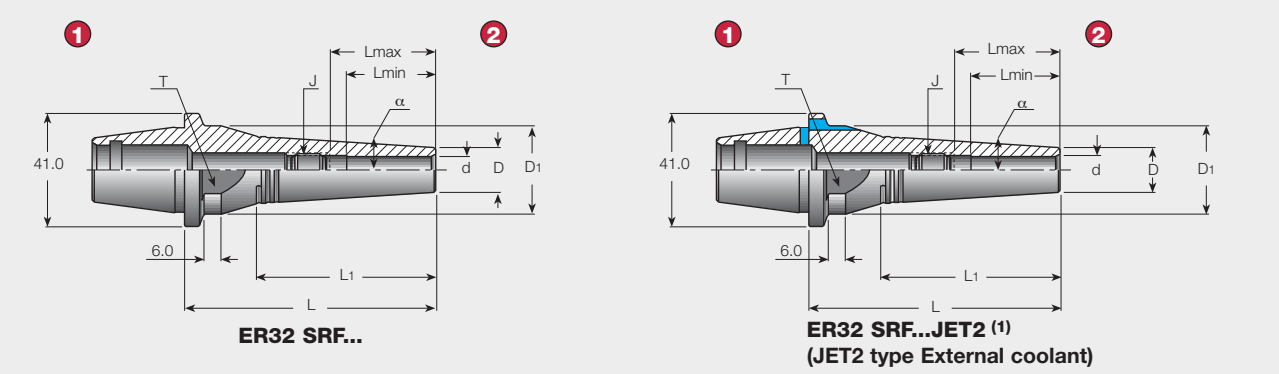

1 TungClick
2 TungShrink

(1)

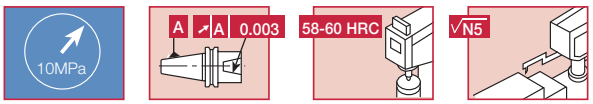

ER-SRF Quick Change Collet with Thermal Shrink SRF type - Metric

(Unit: mm)

Cat. No.	d	L	L1	Lmin	Lmax	D1	D	J	α	Wrench	T
ER32 SRF 3X50	3	50	31.0	10	16	32	10	M6	4°	3	27
ER32 SRF 3X85	3	85	60.5	10	16	32	10	M6	4°	3	27
ER32 SRF 4X50	4	50	31.0	12	18	32	10	M6	4°	3	27
ER32 SRF 4X85	4	85	60.5	12	18	32	10	M6	4°	3	27
ER32 SRF 5X50	5	50	31.0	15	21	32	10	M6	4°	3	27
ER32 SRF 5X85	5	85	60.5	15	21	32	10	M6	4°	3	27
ER32 SRF 6X50	6	50	31.0	18	24	32	11	M8	4°	4	27
ER32 SRF 6X85	6	85	60.5	18	24	32	11	M8	4°	4	27
ER32 SRF 8X50	8	50	33.0	25	31	32	14	M10	4°	5	27
ER32 SRF 8X85	8	85	60.5	25	31	32	14	M10	4°	5	27
ER32 SRF 10X50	10	50	35.0	30	35	32	16	M1	4°	6	27
ER32 SRF 10X85	10	85	60.5	30	36	32	16	M12	4°	6	27
ER32 SRF 12X50	12	50	35.0	32	37	32	20	M14	4°	6	27
ER32 SRF 12X85	12	85	50.0	32	38	32	20	M14	4°	6	27
ER32 SRF 16X60	16	60	46.0	35	45	32	24	M14	3°	6	27
ER32 SRF 16X85	16	85	59.9	35	47	32	24	M14	3°	6	27
ER32 SRF 20X60	20	60	45.5	40	45	38	30	M14	3°	6	32
ER32 SRF 20X85	20	85	65.1	40	55	36	30	M14	3°	6	32

⚠ (2) For JET2 collet, add JET2 to the designations (i.e. ER32 SRF 10/50 JET2).
Tightening torque: 235 N·m

Quick-Change System

Face Contact Advantages:

- Taper and face contact.
- Ideal for high speed machining.
- High precision runout.
- High rigidity.
- Quick and easy clamping (half a turn).

G2.5
20,000 min-1

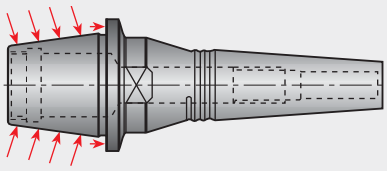

See pages 28, 54, 75, 87

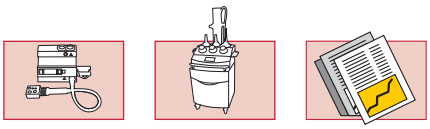

	Thermal	Induction	TungClick
Page	138	136	131

Tungaloy
Member IMC Group

A ER-SRF

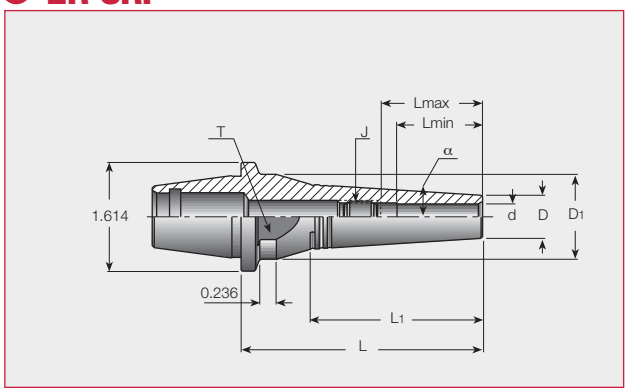

B ER-SRF-JET (External Coolant)

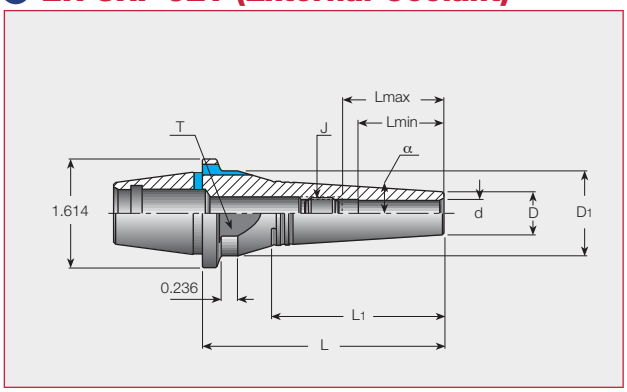

1 TungClick
2 TungShrink

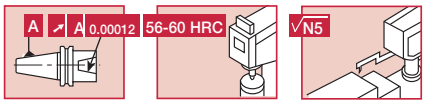

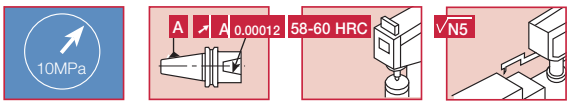

A ER-SRF Quick Change Collet with Thermal Shrink SRF type - Inch

(Unit: inch)

Cat. No.	d	L	L1	Lmin	Lmax	D1	D	J	α		T
ER32 SRF 1/8 X2.500	0.125	2.5	1.535	0.39	0.63	1.26	0.394	M6	4°	0.118	1.063
ER32 SRF 1/8 X3.500	0.125	3.5	2.535	0.39	0.63	1.26	0.394	M6	4°	0.118	1.063
ER32 SRF 3/16X2.500	0.188	2.5	1.535	0.59	0.83	1.26	0.394	M6	4°	0.118	1.063
ER32 SRF 3/16X3.500	0.188	3.5	2.535	0.59	0.83	1.26	0.394	M6	4°	0.118	1.063
ER32 SRF 1/4X2.500	0.25	2.5	1.535	0.71	0.94	1.26	0.433	M8	4°	0.157	1.063
ER32 SRF 1/4X3.500	0.25	3.5	2.535	0.71	0.94	1.26	0.433	M8	4°	0.157	1.063
ER32 SRF 5/16X2.500	0.313	2.5	1.831	0.98	1.22	1.26	0.551	M10	4°	0.197	1.063
ER32 SRF 5/16X3.500	0.313	3.5	2.535	0.98	1.22	1.26	0.551	M10	4°	0.197	1.063
ER32 SRF 3/8X2.500	0.375	2.5	1.909	1.18	1.42	1.26	0.629	M12	4°	0.236	1.063
ER32 SRF 3/8X3.500	0.375	3.5	2.535	1.18	1.42	1.26	0.629	M12	4°	0.236	1.063
ER32 SRF 7/16X2.500	0.438	2.5	1.909	1.22	1.46	1.26	0.787	M14	4°	0.236	1.063
ER32 SRF 7/16X3.500	0.438	3.5	2.122	1.22	1.46	1.26	0.787	M14	4°	0.236	1.063
ER32 SRF 1/2X2.500	0.5	2.5	1.909	1.26	1.5	1.26	0.787	M14	4°	0.236	1.063
ER32 SRF 1/2X3.500	0.5	3.5	2.122	1.26	1.5	1.26	0.787	M14	4°	0.236	1.063
ER32 SRF 5/8 X2.500	0.625	2.5	1.909	1.38	1.85	1.26	0.945	M14	3°	0.236	1.063
ER32 SRF 5/8 X3.500	0.625	3.5	2.516	1.38	1.85	1.26	0.945	M14	3°	0.236	1.063
ER32 SRF 3/4 X2.500	0.75	2.5	1.909	1.58	1.87	1.26	1.181	M14	3°	0.236	1.26
ER32 SRF 3/4 X3.500	0.75	3.5	2.287	1.58	2.17	1.26	1.181	M14	3°	0.236	1.26

⚠ Tightening torque: 235 N·m

B ER-SRF-JET2 Quick Change Collet with Thermal Shrink SRF type (External Coolant) - Inch

(Unit: inch)

Cat. No.	d	L	L1	Lmin	Lmax	D1	D	J	α		T
ER32 SRF 3/8X2.500 JET2	0.375	2.5	1.909	1.18	1.42	1.26	0.629	M12	4°	0.236	1.063
ER32 SRF 3/8X3.500 JET2	0.375	3.5	2.535	1.18	1.42	1.26	0.629	M12	4°	0.236	1.063

⚠ Tightening torque: 235 N·m

Note: Size table is inch.

Page ☞
Thermal 138
Induction 136
User Guide 131

GTIN ER32 Tapping Collet (ISO / DIN / JIS)

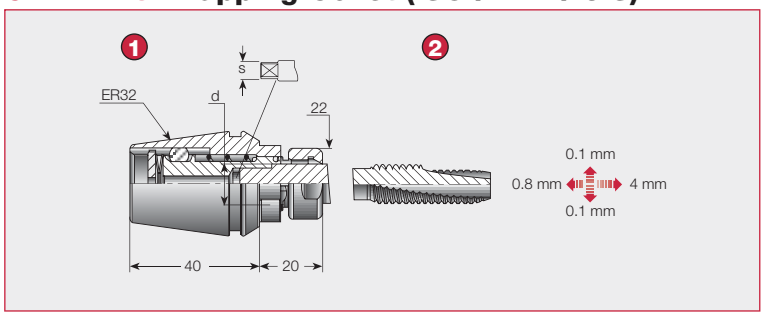

GTIN ER Tapping Collet

Features:

- Fits every type of ER 32 collet chuck, stationary and rotating.
- Compensates for machine feed and tap pitch variance.
- Floating mechanism compensates for misalignment between tap and work piece.
- Hard start for rigid tapping.
- Compact design for minimal clearance.

1 ER32
2 ISO/DIN / JIS type

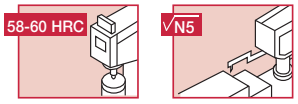

GTIN ER-ISO

(Unit: mm)

Cat. No.	d	S	T Wrench	Tap Size
GTIN ER32 ISO 2.24X1.80	2.24	1.80	20	M3
GTIN ER32 ISO 2.50X2.00	2.50	2.00	20	M3.5
GTIN ER32 ISO 2.80X2.24	2.80	2.24	20	M2.2-M2.5
GTIN ER32 ISO 3.15X2.50	3.15	2.50	20	M3-M4
GTIN ER32 ISO 3.55X2.80	3.55	2.80	20	M3.5-M4.5
GTIN ER32 ISO 4.00X3.15	4.00	3.15	20	M4-M5
GTIN ER32 ISO 4.50X3.55	4.50	3.55	20	M6
GTIN ER32 ISO 5.00X4.00	5.00	4.00	20	M5
GTIN ER32 ISO 5.60X4.50	5.60	4.50	20	(1)
GTIN ER32 ISO 6.30X5.00	6.30	5.00	20	M6-M8
GTIN ER32 ISO 7.10X5.60	7.10	5.60	20	(2)
GTIN ER32 ISO 8.00X6.30	8.00	6.30	20	M8-M10
GTIN ER32 ISO 9.00X7.10	9.00	7.10	20	M12
GTIN ER32 ISO 10.00X8.00	10.00	8.00	20	M10
GTIN ER32 ISO 11.20X9.00	11.20	9.00	20	M14
GTIN ER32 ISO 12.50X10.00	12.50	10.00	20	M16

(1) Tap size: UNC#12-24 (2) Tap size: UNC# -3/8-16

GTIN ER-DIN

(Unit: mm)

Cat. No.	d	S	T Wrench	Tap Size
GTIN ER32 DIN 2.50X2.10	2.50	2.10	20	M1-M1.8
GTIN ER32 DIN 2.80X2.10	2.80	2.10	20	M2-M4
GTIN ER32 DIN 3.50X2.70	3.50	2.70	20	M3-M5
GTIN ER32 DIN 4.00X3.00	4.00	3.00	20	M3-M5
GTIN ER32 DIN 4.50X3.40	4.50	3.40	20	M4-M6
GTIN ER32 DIN 6.00X4.90	6.00	4.90	20	M5-M8
GTIN ER32 DIN 7.00X5.50	7.00	5.50	20	M10
GTIN ER32 DIN 8.00X6.20	8.00	6.20	20	M8
GTIN ER32 DIN 9.00X7.00	9.00	7.00	20	M12
GTIN ER32 DIN 10.00X8.00	10.00	8.00	20	M10
GTIN ER32 DIN 11.00X9.00	11.00	9.00	20	M14
GTIN ER32 DIN 12.00X9.00	12.00	9.00	20	M16

GTIN ER-JIS

(Unit: mm)

Cat. No.	d	S	T Wrench	Tap Size
GTIN ER32 JIS 3.00X2.50	3.0	2.5	20	M1-M2.6
GTIN ER32 JIS 4.00X3.20	4.0	3.2	20	M3-M3.5
GTIN ER32 JIS 5.00X4.00	5.0	4.0	20	M4
GTIN ER32 JIS 5.50X4.50	5.5	4.5	20	M5
GTIN ER32 JIS 6.00X4.50	6.0	4.5	20	M6
GTIN ER32 JIS 6.20X5.00	6.2	5.0	20	M8
GTIN ER32 JIS 7.00X5.50	7.0	5.5	20	M10
GTIN ER32 JIS 8.50X6.50	8.5	6.5	20	M12
GTIN ER32 JIS 10.50X8.00	10.5	8.0	20	M14
GTIN ER32 JIS 12.50X10.00	12.5	10.0	20	M16

No coolant should be induced through the tapping collet, as it will cause malfunctioning of the mechanism.

Tungaloy Member IMC Group

GTIN ER32 Tapping Collet（ANSI）

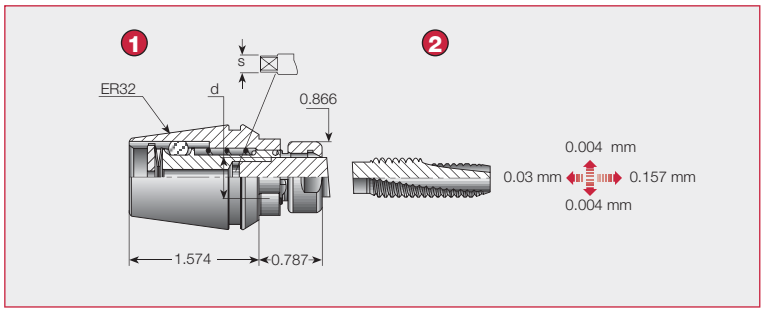

GTIN ER Tapping Collet

Features:

- Fits every type of ER 32 collet chuck, stationary and rotating.
- Compensates for machine feed and tap pitch variance.
- Floating mechanism compensates for misalignment between tap and work piece.
- Hard start for rigid tapping.
- Compact design for minimal clearance.

1. **ER32**
2. **ANSI Type**

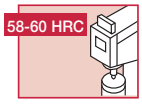

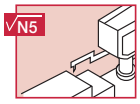

GTIN ER-ANSI

(Unit: inch)

Cat. No.	d	S	T Wrench	Tap Size
GTIN ER32 ANSI .141X.110	0.141	0.11	0.787	#6
GTIN ER32 ANSI .168X.131	0.168	0.131	0.787	#8
GTIN ER32 ANSI .194X.152	0.194	0.152	0.787	#10
GTIN ER32 ANSI .220X.165	0.22	0.165	0.787	#12
GTIN ER32 ANSI .255X.191	0.255	0.191	0.787	1/4
GTIN ER32 ANSI .318X.238	0.318	0.238	0.787	5/16
GTIN ER32 ANSI .323X.242	0.323	0.242	0.787	7/16
GTIN ER32 ANSI .367X.275	0.367	0.275	0.787	1/2
GTIN ER32 ANSI .381X.286	0.381	0286	0.787	3/8
GTIN ER32 ANSI .429X.322	0.429	0322	0.787	9/16
GTIN ER32 ANSI .480X.360	0.48	0.36	0.787	5/8

Note: Size table is inch.

Accessories • Pull Stud

PS BT-JIS / MAZAK

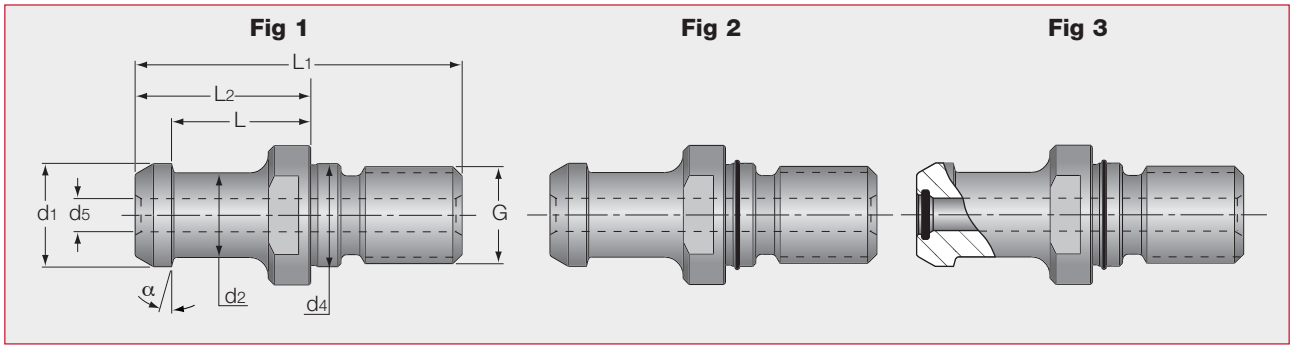

Fig 1: Coolant holes only in items with a "B" suffix.
Fig 2: With external O-ring.
Fig 3: With external and internal O-rings.

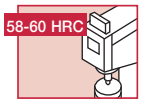

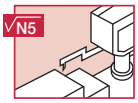

PS BT-JIS / MAZAK Pull Stud BT-JIS/ANSI - Metric

(Unit: mm)

Cat. No.	G	d_1	d_2	d_4	d_5	L	L_1	L_2	α	Fig
PS BT30 15° M12 JIS B	M12	12.00	8.0	13	4.0	18.4	43.0	23.4	15°	1
PS BT40 15° M16 JIS B	M16	19.00	14.0	17	5.5	23	54.0	29.0	15°	1
PS BT40 15° M16 JIS O B	M16	19.00	14.0	17	5.5	23	54.0	29.0	15°	2
PS BT40 15° M16 JIS O B O	M16	19.00	14.0	17	5.5	23	54.0	29.0	15°	3
PS BT50 15° M24 JIS B	M24	28.00	21.0	25	8.0	25	74.0	34.0	15°	1
PS BT50 15° M24 JIS O B	M24	28.00	21.0	25	8.0	25	74.0	34.0	15°	2
PS BT50 15° M24 JIS O B O	M24	28.00	21.0	25	8.0	25	74.0	34.0	15°	3
PS BT40 45° M16 MAZAK B	M16	18.79	12.4	17	7.0	14.026	44.1	19.1	45°	1
PS BT50 45° M24 MAZAK B	M24	28.95	20.8	25	8.0	17.58	65.2	25.2	45°	1

PS BT-MAS

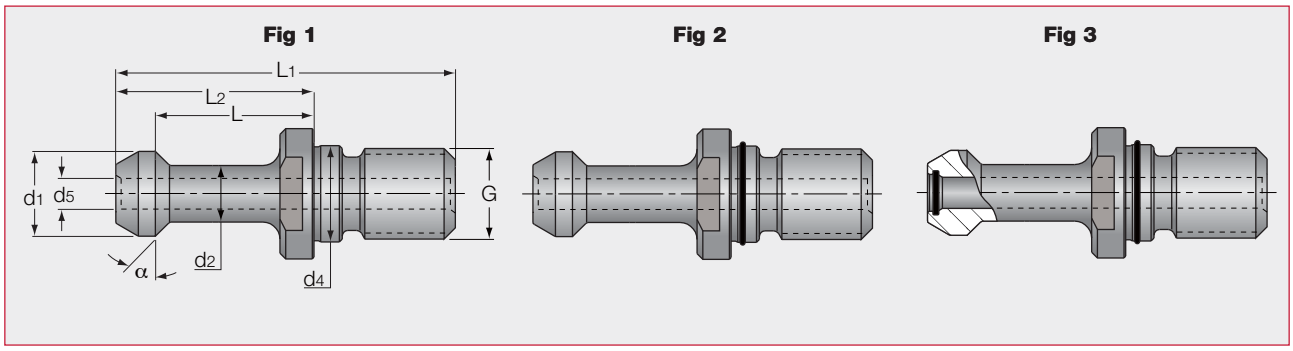

Fig 1: Coolant holes only in items with a "B" suffix.
Fig 2: With external O-ring.
Fig 3: With external and internal O-rings.

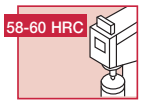

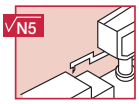

PS BT-MAS Pull Stud BT-MAS - Metric

(Unit: mm)

Cat. No.	G	d_1	d_2	d_4	d_5	L	L_1	L_2	α	Fig
PS BT30 45° M12 MAS1	M12	11	7	12.5	-	18	43	23	45°	1
PS BT30 45° M12 MAS1 B	M12	11	7	12.5	3	18	43	23	45°	1
PS BT30 60° M12 MAS2	M12	11	7	12.5	-	18	43	23	30°	1
PS BT30 60° M12 MAS2 B	M12	11	7	12.5	3	18	43	23	30°	1
PS BT40 45° M16 MAS1	M16	15	10	17.0	-	28	60	35	45°	1
PS BT40 45° M16 MAS1 B	M16	15	10	17.0	5.5	28	60	35	45°	1
PS BT40 60° M16 MAS2	M16	15	10	17.0	-	28	60	35	30°	1
PS BT40 60° M16 MAS2 B	M16	15	10	17.0	5.5	28	60	35	30°	1
PS BT40 90° M16 MAS3	M16	15	10	17.0	-	28	60	35	90°	1
PS BT40 90° M16 MAS3 B	M16	15	10	17.0	5.5	28	60	35	90°	1
PS BT50 45° M24 MAS1	M24	23	17	25.0	-	35	85	45	45°	1
PS BT50 45° M24 MAS1 B	M24	23	17	25.0	6.0	35	85	45	45°	1
PS BT50 45° M24 MAS1 O B	M24	23	17	25.0	6.0	35	85	45	45°	2
PS BT50 45° M24 MAS1 O B O	M24	23	17	25.0	6.0	35	85	45	45°	3
PS BT50 60° M24 MAS2	M24	23	17	25.0	-	35	85	45	30°	1
PS BT50 60° M24 MAS2 B	M24	23	17	25.0	6.0	35	85	45	30°	1
PS BT50 60° M24 MAS2 O B	M24	23	17	25.0	6.0	35	85	45	30°	2
PS BT50 90° M24 MAS3	M24	23	17	25.0	-	35	85	45	90°	1
PS BT50 90° M24 MAS3 B	M24	23	17	25.0	6.0	35	85	45	90°	1
PS BT50 90° M24 MAS3 O B	M24	23	17	25.0	6.0	35	85	45	90°	2

Tungaloy
Member IMC Group

PS SK-DIN / PS CAT-ISO

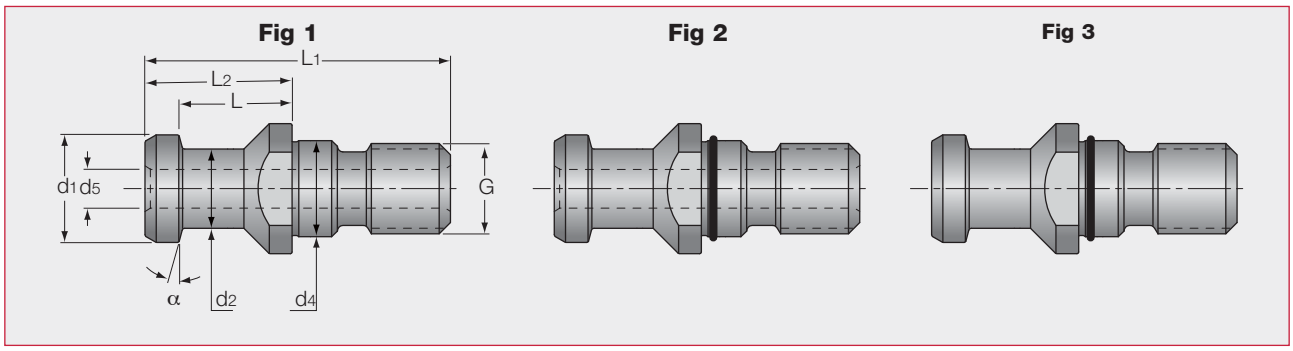

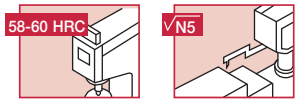

PS SK-DIN / PS CAT-ISO Pull Stud DIN69872 / ISO 7388 - Metric

(Unit: mm)

Cat. No.	G	d_1	d_2	d_4	d_5	L	L_1	L_2	α	Fig
PS SK30 15° M12 DIN	M12	13	9	13	-	19	44	24	15°	1
PS SK40 15° M16 DIN	M16	19	14	17	-	20	54	26	15°	1
PS SK40 15° M16 DIN O	M16	19	14	17	-	20	54	26	15°	3
PS SK40 15° M16 DIN B	M16	19	14	17	7.0	20	54	26	15°	1
PS SK40 15° M16 DIN O B	M16	19	14	17	7.0	20	54	26	15°	2
PS SK50 15° M24 DIN	M24	28	21	25	-	25	74	34	15°	1
PS SK50 15° M24 DIN O	M24	28	21	25	-	25	74	34	15°	3
PS SK50 15° M24 DIN B	M24	28	21	25	11.5	25	74	34	15°	1
PS CAT30 45° M12 ISO B	M12	13.35	9.3	13	4.75	8.13	34.0	11.80	45°	1
PS CAT40 45° M16 ISO B	M16	18.95	12.9	17	7.35	11.15	44.5	16.40	45°	1
PS CAT50 45° M24 ISO B	M24	29.10	19.6	25	8	17.95	65.5	25.55	45°	1

Fig 1: Coolant holes only in items with a "B" suffix.
Fig 2: With external O-ring.
Fig 3: With external and internal O-rings.

PS OTT-BT / SK

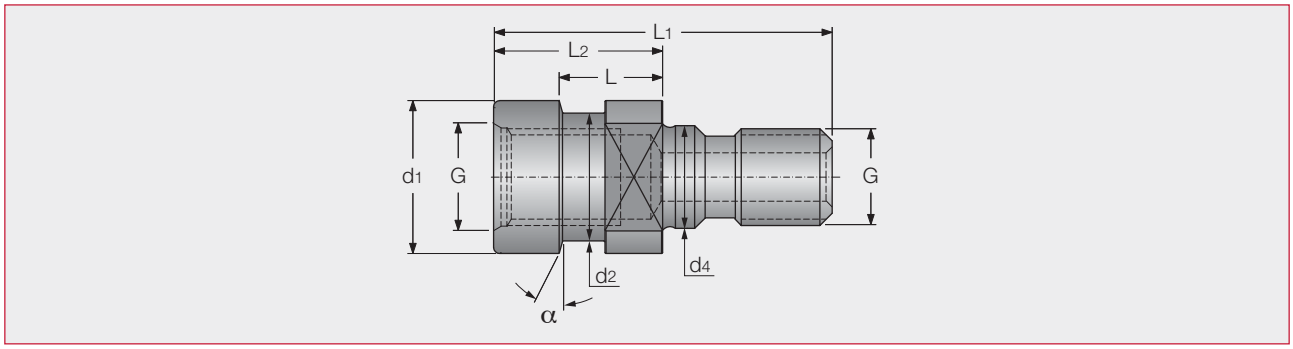

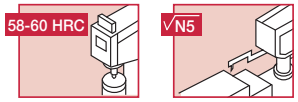

PS OTT BT / SK Pull Stud OTT System

(Unit: mm)

Cat. No.	G	d_1	d_2	d_4	L	L_1	L_2	α
PS OTT BT40 M16	M16	25.0	21.1	17	16.60	56.00	28.00	15°
PS OTT BT50 M24	M24	39.3	32.0	24	13.35	65.00	25.00	15°
PS OTT SK40 M16	M16	25.0	21.1	17	13.60	53.00	25.00	15°

PS CAT-ANSI

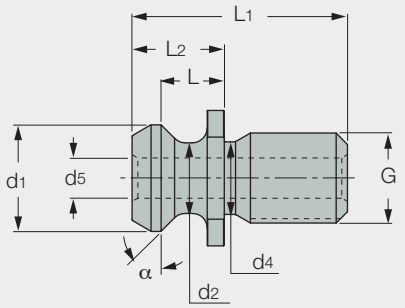

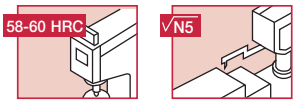

PS CAT-ANSI Pull Stud (CAT-ANSI) - Inch

(Unit: inch)

Cat. No.	G	d_1	d_2	d_4	d_5	L	L_1	L_2	α
PS CAT40 45 5/8 ANSI	5/8-11	0.74	0.49	0.49	-	0.439	1.5	0.64	45°
PS CAT50 45 1 ANSI B	1-8	1.14	0.82	0.82	0.315	0.703	2.3	1	45°
PS CAT40 45 5/8 ANSI B	5/8-11	0.74	0.49	0.49	0.28	0.439	1.5	0.64	45°
PS CAT50 45 1 ANSI	1-8	1.14	0.82	0.82	-	0.703	2.3	1	45°

Coolant holes only in items with a "B" suffix.

Note: Size table is inch.

PS CAT-MAS

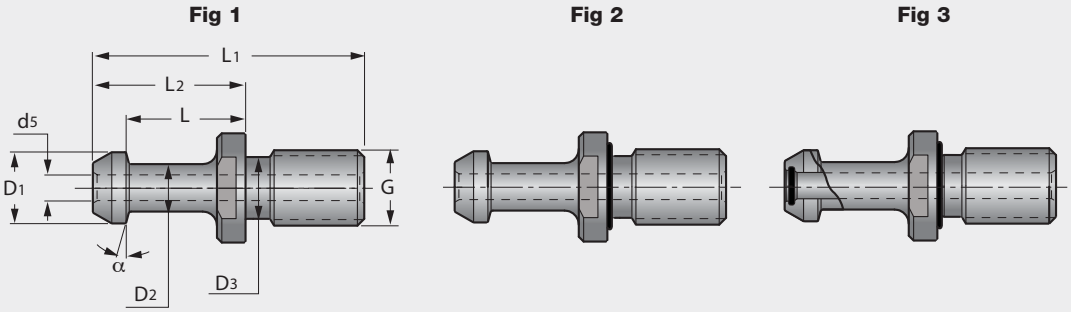

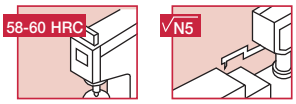

PS CAT-ANSI Pull Stud (CAT-MAS) - Inch

(Unit: inch)

Cat. No.	G	d_1	d_2	d_4	d_5	L	L_1	L_2	α	Fig
PS CAT40 45 M16 MAS1	M16	0.606	0.394	0.512	0.217	0.995	2.25	1.274	45°	-
PS CAT40 45 M16 MAS1 B	M16	0.606	0.394	0.512	0.217	0.995	2.25	1.274	45°	1
PS CAT40 45 5/8 MAS1	5/8-11	0.59	0.39	0.512	-	0.99	2.25	1.266	45°	-
PS CAT40 45 5/8 MAS1 B	5/8-11	0.59	0.39	0.512	0.217	0.99	2.25	1.266	45°	1
PS CAT40 60 5/8 MAS2	5/8-11	0.59	0.39	0.512	-	0.99	2.25	1.266	60°	-
PS CAT40 60 5/8 MAS2 B	5/8-11	0.59	0.39	0.512	0.217	0.99	2.25	1.266	60°	1
PS CAT40 90 5/8 MAS3	5/8-11	0.59	0.39	0.512	-	0.99	2.25	1.266	90°	-
PS CAT40 90 5/8MAS3 B	5/8-11	0.59	0.39	0.512	0.217	0.99	2.25	1.266	90°	1
PS CAT50 45 1" MAS1	1-8	0.906	0.67	0.827	-	1.378	3.346	1.772	45°	-
PS CAT50 45 1" MAS1 B	1-8	0.906	0.67	0.827	0.236	1.378	3.346	1.772	45°	1
PS CAT50 45 1" MAS1 OBO	1-8	0.906	0.67	0.827	0.236	1.378	3.346	1.772	45°	3
PS CAT50 60 1" MAS2	1-8	0.906	0.67	0.827	-	1.378	3.346	1.772	60°	-
PS CAT50 60 1" MAS2 B	1-8	0.906	0.67	0.827	0.236	1.378	3.346	1.772	60°	1
PS CAT50 90 1" MAS3	1-8	0.906	0.67	0.827	-	1.378	3.346	1.772	90°	-
PS CAT50 90 1" MAS3 B	1-8	0.906	0.67	0.827	0.236	1.378	3.346	1.772	90°	1

Fig 1: Coolant holes only in items with a "B" suffix.
Fig 3: With external and internal O-rings.

Note: Size table is inch.

Tungaloy
Member IMC Group

Accessories • ER NUT

A NUT ER-TOP

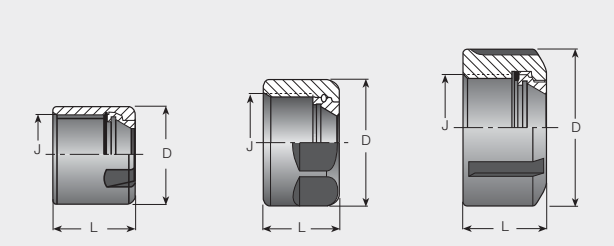

ER 16 TOP MINI | ER 16, 20 TOP | ER 25, 32, 40 TOP

B NUT E-UM / MINI

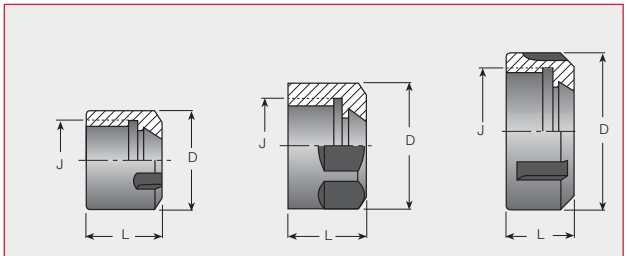

ER 11, 16, 20, 25 Mini | UM ER 16, 20 | UM ER 25, 32, 40, 50

A NUT-ER-TOP ER Clamping NUT (DIN6499)

(Unit: mm)

Cat. No.	D	L	J	N·m
NUT ER16 TOP MINI	22	18	M19X1.0	39.2
NUT ER16 TOP	28	17	M22X1.5	68.7
NUT ER20 TOP	34	19	M25X1.5	117.7
NUT ER25 TOP	42	20	M32X1.5	196.1
NUT ER32 TOP	50	22	M40X1.5	215.7
NUT ER40 TOP	63	25	M50X1.5	245.1

B NUT ER-UM / Mini UM & Mini Clamping NUT (DIN6499)

(Unit: mm)

Cat. No.	D	L	J	N·m
NUT ER11 MINI	16	10.8	M13X0.75	29.4
NUT ER11 UM	19	11.3	M14X0.75	49
NUT ER16 MINI	22	18.0	M19X1.0	39.2
NUT ER16 UM	28	17.0	M22X1.5	68.7
NUT ER20 MINI	28	19.0	M24X1.0	78.5
NUT ER20 UM	34	19.0	M25X1.5	117.7
NUT ER25 MINI	35	20.0	M30X10	98
NUT ER25 UM	42	20.0	M32X1.5	196.1
NUT ER32 UM	50	22.0	M40X1.5	215.7
NUT ER40 UM	63	25.0	M50X1.5	245.1
NUT ER50 UM	78	35.0	M64X2.0	343.2

Accessories • TUNGSHORT • TUNGBALANCE

NUT ER-BALANCE

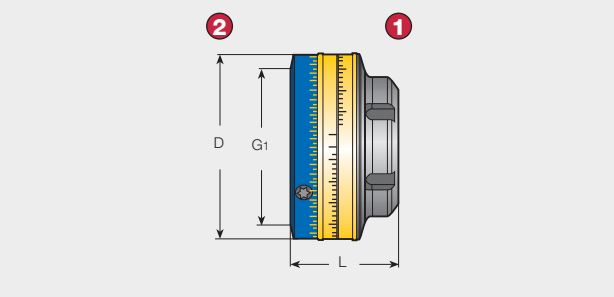

1 DIN6499
2 TungBalance

NUT ER-SHORT

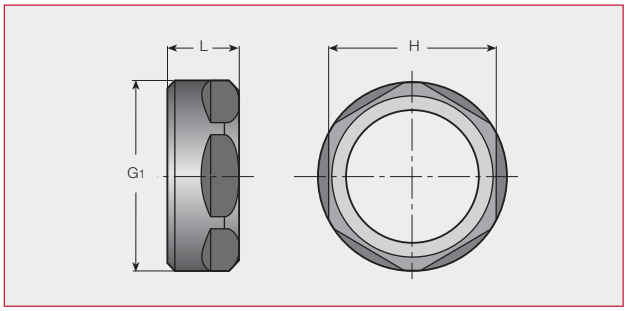

For Short Collet Chuck ER32

NUT ER-BALANCE Balanceable ER Top Nut (NUT According to DIN6499)

(Unit: mm)

Cat. No.	L	D	G1	N·m
NUT ER16 TOP BIN	36.0	44	M22x1.5	68.7
NUT ER20 TOP BIN	37.0	50	M25x1.5	117.7
NUT ER25 TOP BIN	37.5	58	M32x1.5	196.1
NUT ER32 TOP BIN	38.0	66	M40x1.5	215.7

NUT ER-SHORT NUT ER32 SHORTIN

(Unit: mm)

Cat. No.	H	L	G1	N·m
NUT ER20 SHORT	22	10.7	M25X1.5	117.7
NUT ER32 SHORT	36	15.0	M40X1.5	215.7
NUT ER40 SHORT	46	16.0	M50X1.5	245.1

WRENCH-ER

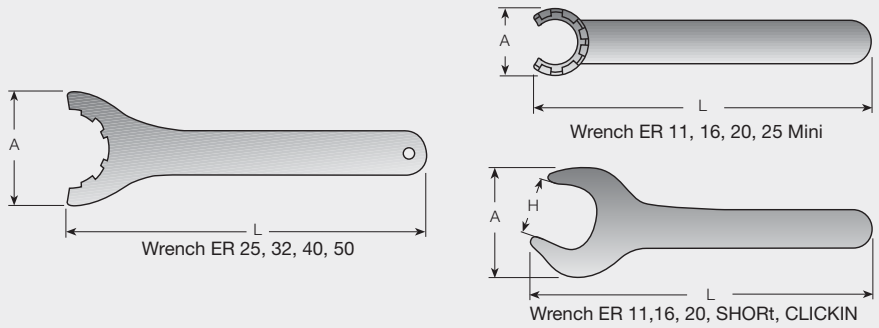

WRENCH-ER Wrench for ER DIN 6499

(Unit: mm)

Cat. No.	A	H	L
WRENCH ER11 MINI	16.8	-	95
WRENCH ER11	32	17	95
WRENCH ER16 MINI	22.5	-	117
WRENCH ER16	42.8	25	143
WRENCH ER20 MINI	28	-	128
WRENCH ER20	53.5	30	172
WRENCH ER25 MINI	29	-	120
WRENCH ER25	70	-	207
WRENCH ER32	78	-	255
WRENCH ER40	95	-	285
WRENCH ER50	110	-	350
WRENCH ER20 SHORT	48	22	260
WRENCH ER32 SHORT	75	36	303
WRENCH ER40 SHORT	94	46	378
WRENCH ER32 CLICKIN 27	57	27	239
WRENCH ER32 CLICKIN 32	67	32	273

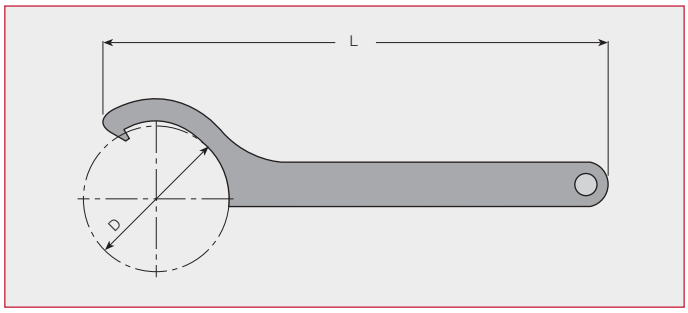

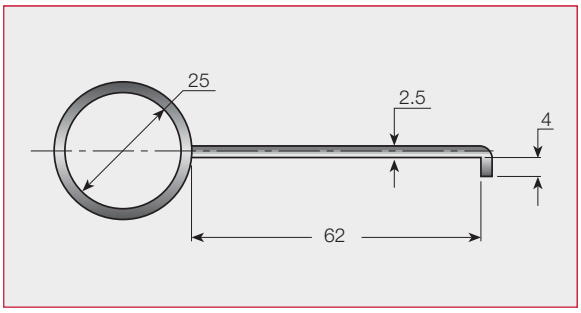

Wrench for TungMax Collets

(Unit: mm)

Cat. No.	D	L
WRENCH MAXIN 20 HOOK	26	205
WRENCH MAXIN 32 HOOK	68	240

SC Collet Extracting Hook for TungMax

Cat. No.
EXTRACTOR SC COLLETS

Preset Screws for ER Collet Chuck

PRESET ER-JET

(Unit: mm)

Cat. No.	J	Fig
PRESET ER-JET 8X1	M8X1.0	2
PRESET ER-JET 8X1.25	M8X1.25	2
PRESET ER-JET 10X1.5	M10X1.5	2
PRESET ER-JET 12X1	M12X1.0	2
PRESET ER-JET 12X1.75L	M12X1.75	1
PRESET ER-JET 12X1.75	M12X1.75	2
PRESET ER-JET 14X1	M14X1.0	2
PRESET ER-JET 16X2	M16X2	2
PRESET ER-JET 16X2L	M16X2	1
PRESET ER-JET 18X1	M18X1.0	2
PRESET ER-JET 18X1.5	M18X1.5	2
PRESET ER-JET 18X1.5L	M18X1.5	1
PRESET ER-JET 22X1.5	M22X1.5	2
PRESET ER-JET 22X1.5L	M22X1.5	1
PRESET ER-JET 28X1.5	M28X1.5	2

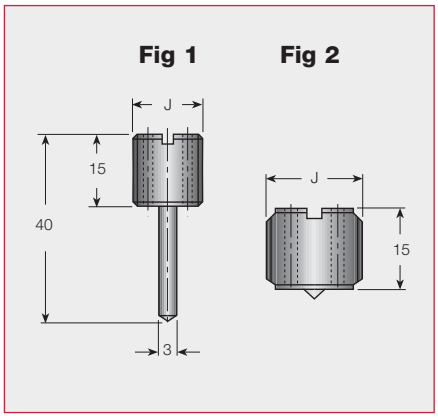

PRESET MAXIN Preset Screw for TungMax

(Unit: mm)

Cat. No.	G	L	D	K
PRESET MAXIN 16X30	M16	30	8	8
PRESET MAXIN 16X44	M16	44	8	8
PRESET MAXIN 20X55	M20	55	12	12

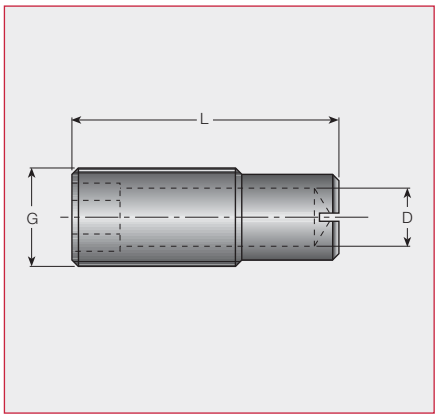

Accessories • Lock Screw / Preset Screws

Ⓐ SCREW-SEM

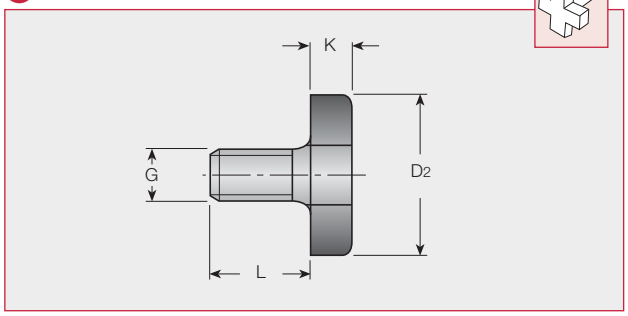

Ⓑ SCREW-EM

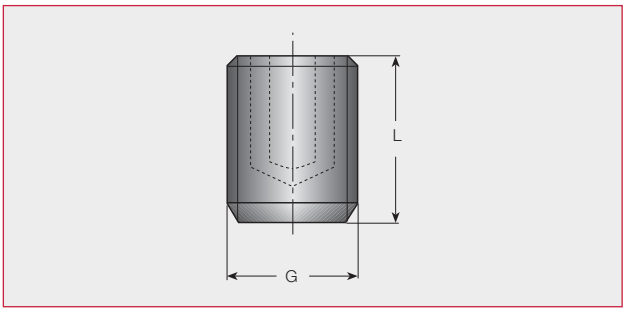

Ⓐ SCREW-SEM Lock Screw for Shell Mill Holder

(Unit: mm)

Cat. No.	S.M.C.	D_1	D_2	K	L
M 8 CLAMP SCREW SEM 16	16	M8	20	6	16
M 10 CLAMP SCREW SEM 22	22	M10	28	7	18
M 12 CLAMP SCREW SEM 27	27	M12	35	8	22
M 16 CLAMP SCREW SEM 32	32	M16	42	9	26
M 20 CLAMP SCREW SEM 40	40	M20	52	10	30
M 24 CLAMP SCREW SEM 50	50	M24	63	12	36

Ⓑ SCREW-EM Lock Screw for Endmill Holder

(Unit: mm)

Cat. No.	G	L	Used for Shanks
HW M 6X10 EM SCREW	M6	10.0	6
HW M 8X10 EM SCREW	M8	10.0	8
HW M10X12 EM SCREW	M10	12.0	10
HW M12X16 EM SCREW	M12	16.0	12, 14
HW M14X16 EM SCREW	M14	16.0	16, 16
HW M16X16 EM SCREW	M16	16.0	20
HW M18X20 EM SCREW	M18X2	20.0	25, 32
HW M20X20 EM SCREW	M20X2	20.0	40
HW M24X25 EM SCREW	M24X2	25.0	50
HW M16X10.3 EM SHORT	M16	10.3	20
HW M18X2X10 EM SHORT	M18X2	10.0	2

Spare Parts for TungFit Holders

(Unit: mm)

Size	Locking Screw	Wrench	Wrench	O-Ring
CF4	M16X1.5-CF	HW 8.0	M8-CF	O RING 3 ID15

PRESET SCREW for SRKIN THERMAL SHRINK COLLETS

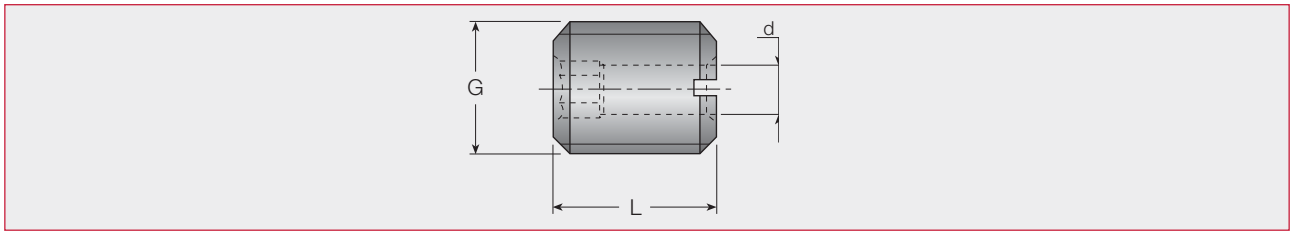

PRESET SCREW with Coolant Holes for SRKIN THERMAL SHRINK COLLETS

(Unit: mm)

Cat. No.	G	L	d	Used for Shanks	Wrench
PRESET SCREW M 5X20 B	M 5X0.8	20	2.1	EM E/SRKIN	2.5
PRESET SCREW M 6X20 B	M 6X1	20	2.5	EM E/SRKIN	3.0
PRESET SCREW M 8X20 B	M 8X1.25	20	3.5	EM E/SRKIN	4.0
PRESET SCREW M10X18 B	M 10X1.5	18	4.5	EM E/SRKIN	5.0
PRESET SCREW M12X18 B	M 12X1.75	18	5.5	EM E/SRKIN	6.0
PRESET SCREW M16X20 B	M 16X2	20	7.5	EM E/SRKIN	6.0
PRESET SCREW M16X25 B	M 16X2	25	7.5	SRKIN	6.0
PRESET SCREW M20X20 B	M 20X2.5	20	6.0	EM E	6.0
PRESET SCREW M20X25 B	M 20X2	25	9.5	EM E	10.0

Tungaloy
Member IMC Group

Accessories • Wrench for Shell Mill Holder

WRENCH SEMC

(Unit: mm)

Cat. No.	SMC	Screw Size	H	L
WRENCH M 8 SEMC 16	16	M8	20	180
WRENCH M10 SEMC 22	22	M10	25	200
WRENCH M12 SEMC 27	27	M12	32	225
WRENCH M16 SEMC 32	32	M18	36	250
WRENCH M20 SEMC 40	40	M20	40	280
WRENCH M24 SEMC 50	50	M24	50	315

Wrench DIN 6368 for COMBI Shell End mill Holder

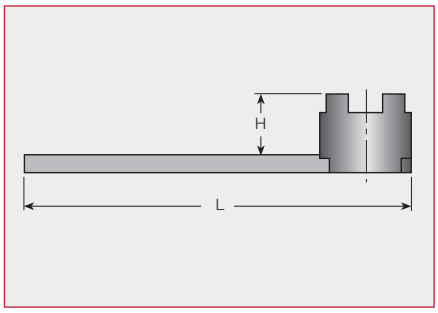

DRIVING RING SEMC

(Unit: mm)

Cat. No.	D_1	D_3	L	B	H
16 D.RING SEMC	16	32	10	8	5.0
22 D.RING SEMC	22	40	12	10	6.0
27 D.RING SEMC	27	48	12	12	6.3
32 D.RING SEMC	32	58	14	14	7.0
40 D.RING SEMC	40	70	14	16	8.0
50 D.RING SEMC	50	90	16	18	9.0

Use's with "WRENCH SEMC"

Driving Ring DIN 6366/1 for COMBI Shell and Mill Holder

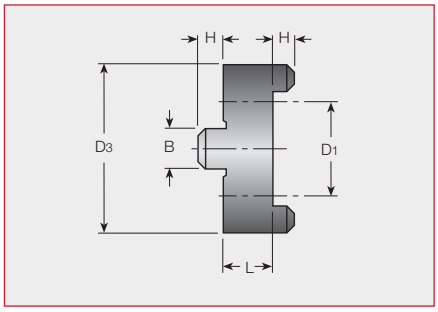

Accessories • HSK

COOLING TUBE for HSK

(Unit: mm)

Cat. No.	HSK-A	L	L_1	G
COOLING TUBE HSK A 40	40	29.1	7.5	M12X1
COOLING TUBE HSK A 50	50	32.7	9.5	M16X1
COOLING TUBE HSK A 63	63	36.0	11.5	M18X1
COOLING TUBE HSK A 80	80	36.6	13.5	M20X1.5
COOLING TUBE HSK A 100	100	43.6	15.5	M24X1.5

HSK-A Cooling Tube

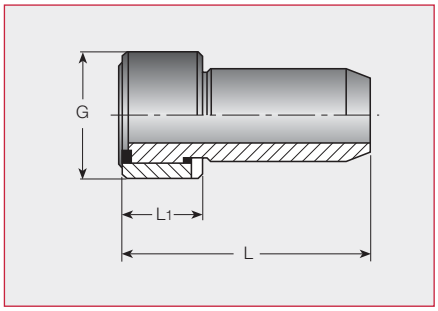

Wrench for HSK Cooling Tube

(Unit: mm)

Cat. No.	HSK-A	D	L
WRENCH COOL TUBE HSK 40	40	11.0	120
WRENCH COOL TUBE HSK 50	50	15.0	120
WRENCH COOL TUBE HSK 63	63	17.0	122
WRENCH COOL TUBE HSK 80	80	18.5	186
WRENCH COOL TUBE HSK100	100	22.0	141

HSK-A Cooling Tube Wrench

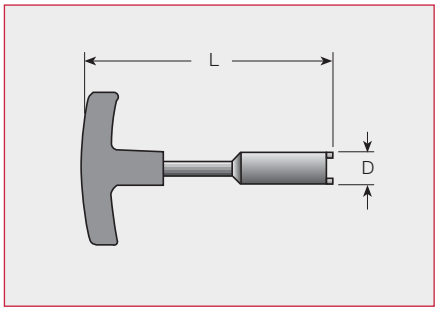

Accessories

TOOL CLAMP

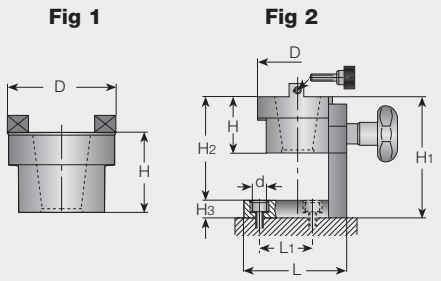

TOOL CLAMP Fixture for ISO, DIN 69871 and BT MAS-403 Tool Shank

(Unit: mm)

Cat. No.	D	H	H_1	H_2	H_3	L	L_1	d	Fig
TOOL CLAMP 30 ROTARY	70	56	128	109	19	104	40	12.5	2
TOOL CLAMP 40 ROTARY	82	56	128	109	19	104	40	12.5	2
TOOL CLAMP 50 ROTARY	103	71	170	151	19	144	85	12.5	2
TOOL CLAMP 30 FIX	82	58	-	-	-	-	-	-	1
TOOL CLAMP 40 FIX	82	58	-	-	-	-	-	-	1
TOOL CLAMP 50 FIX	103	71	-	-	-	-	-	-	1

MULTI CLAMP

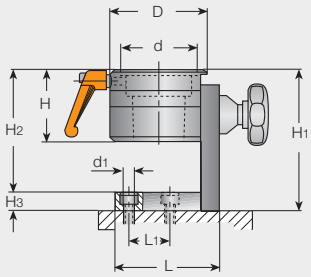

MULTI-CLAMP HSK E/F Rotary Fixture for HSK-E/F type Shank

(Unit: mm)

Cat. No.	D	d	d_1	L	L_1	H	H_1	H_2	H_3
MULTI CLAMP 32E/F	113.2	32	12.5	144	40	70	133	114	19
MULTI CLAMP 40E/F	113.2	40	12.5	144	40	70	133	114	19
MULTI CLAMP 50E/F	113.2	50	12.5	144	40	70	133	114	19
MULTI CLAMP 63E/F	113.2	63	12.5	144	40	70	133	114	19

MULTI-CLAMP HSK A/C Rotary Fixture for HSK-A/C type Shank

(Unit: mm)

Cat. No.	D	d	d_1	L	L_1	H	H_1	H_2	H_3
MULTI CLAMP 50 A/C	82	50	12.5	104	40	72	142	123	19
MULTI CLAMP 63 A/C	95	63	12.5	104	40	72	142	123	19
MULTI CLAMP 100 A/C	130	100	12.5	144	85	90	178	159	19

Tungaloy
Member IMC Group

Electrical Nut-Clamp Torque Control Device

- Ensures controlled (proper) clamping of cutting tools
- Maintains collet chuck accuracy
- Easy clamping and unclamping of cutting tools
- Handy set for various collet chuck sizes
- Main spindle taper #50
- Suitable for main shank standards #40, #50, HSK 63, HSK 100

Table Model

Specifications

Euro Motor: 1 phase 200/240V 50/60 HZ 1 Kn
Weight: Table model - 85 KG.
Trolley (optional) - 15 Kgf.

Easy Lock Unit
Electrical Nut-Clamp Torque Control Device

Cat. No.	Accessories	
	Standard	Optional
EASY LOCK T.C EU	TP50 AD 40 EASY	EASY LOCK TROLLEY
	WRENCH ER16 EASY LOCK	TP40 AD 30 EASY
	WRENCH ER20 EASY LOCK	TP50 AD HSK 63 EASY
	WRENCH ER25 EASY LOCK	TP50 AD HSK 100 EASY
	WRENCH ER32 EASY LOCK	
	WRENCH ER40 EASY LOCK	WRENCH ER50 EASY LOCK
		WRENCH TG100 OPEN EASY

Electrical Nut-Clamp Torque Control Device

Power Clamping Unit for Collet Chucks

Choose the correct wrench size. Mount it on the wrench holder.

Place the wrench on the collet chuck nut.

Mount the collet chuck into the unit spindle.

Ensure that main power switch is on and that the power supply cable is connected.

To clamp - Push and hold in the "clamp" button until the bottom light goes off.

Torque Selector **NEW**

Power Lamp

To unclamp - Push and hold in the "unclamp" button until the collet chuck is totally open.

Note: Assemble the collet and cutting tool.
By hand, place the nut onto the collet chuck.

(Unit: mm)

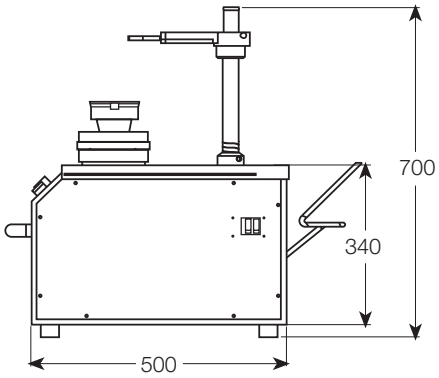

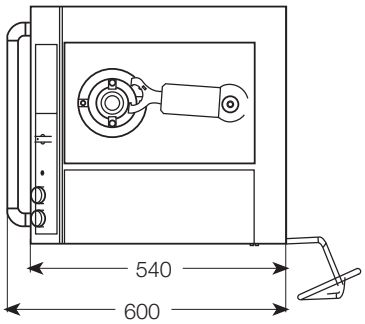

Trolley (optional)

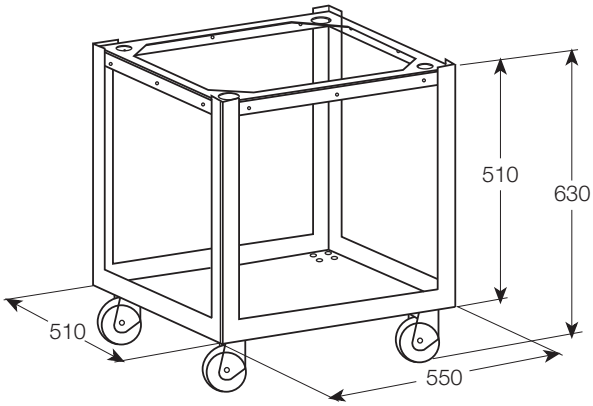

Tungaloy
Member IMC Group

Tungaloy

Member IMC Group

TUNGHOLD

TUNGALOY

Tungaloy
Member IMC Group

Tungaloy Corporation (Head office)
11-1 Yoshima-Kogyodanchi
Iwaki-city, Fukushima, 970-1144 Japan
Phone: +81-246-36-8501 Fax: +81-246-36-8542
http://www.tungaloy.co.jp/

Tungaloy America, Inc.
3726 N Ventura Drive, Arlington Heights, IL 60004, U.S.A.
Phone: +1-888-554-8394 Fax: +1-888-554-8392
http://www.tungaloyamerica.com

Tungaloy Canada
432 Elgin St. Unit 3, Brantford, Ontario N3S 7P7, Canada
Phone: +1-519-758-5779 Fax: +1-519-758-5791
http://www.tungaloyamerica.com/

Tungaloy de Mexico S.A.
C Los Arellano 113, Parque Industrial Siglo XXI
Aguascalientes, AGS, Mexico 20290
Phone:+52-449-929-5410 Fax:+52-449-929-5411
http://www.tungaloyamerica.com/

Tungaloy do Brasil Comércio de Ferramentas de Corte Ltda.
Rua dos Sabias N.104
13280-000 Vinhedo, São Paulo, Brazil
Phone:+55-19-38262757 Fax:+55-19-38262757
http://www.tungaloy.co.jp/br/

Tungaloy Germany GmbH
Elisabeth-Selbert-Str. 3
D-40764 Langenfeld, Germany
Phone: +49-2173-90420-0 Fax: +49-2173-90420-19
http://www.tungaloy.de.

Tungaloy France S.A.S.
ZA Courtaboeuf - Le Rio, 1 rue de la Terre de feu
F-91952 Courtaboeuf Cedex, France
Phone: +33-1-6486-4300 Fax: +33-1-6907-7817
http://www.tungaloy-eu.com

Tungaloy Italia S.r.l.
Via E. Andolfato 10
I-20126 Milano, Italy
Phone: +39-02-252012-1 Fax: +39-02-252012-65
http://www.tungaloy-eu.com/

Tungaloy Czech s.r.o
Turanka 115
CZ-627 00 Brno, Czech Republic
Phone: +420-532 123 391 Fax: +420-532 123 392
http://www.tungaloy.co.jp/cz/

Tungaloy Ibérica S.L.
C/La Pau, nº46
E-08243 Manresa (BCN), SPAIN
Phone:+34 93 1131360 Fax:+34 93 1131361
http://www.tungaloy.co.jp/es/

Tungaloy Scandinavia AB
S:t Lars Väg 42A
SE-22270 Lund, Sweden
Phone:+46-462119200 Fax:+46-462119207
http://www.tungaloy.co.jp/se/

Tungaloy Rus, LLC
36-G Kostukova str.
308012 Belgorod, Russia
Phone:+7 4722 58 57 57 Fax:+7 4722 58 57 83
http://www.tungaloy.co.jp/ru/

Tungaloy Polska Sp. z o.o.
ul. Genewska 24
03-963 Warszawa, Poland
Phone: +48-22-617-0890 Fax: +48-22-617-0890
http://www.tungaloy.co.jp/pl/

Tungaloy U.K. Ltd
Woodgate Business Park, Bartley Green
Birmingham B32 3DE, UK
Phone:+44 121 244 3064 Fax: +44 121 270 9694
http://www.tungaloy.co.jp/uk salesinfo@tungaloyuk.co.uk

Tungaloy Cutting Tool (Shanghai) Co.,Ltd.
Rm No 401 No.88 Zhabei, Jiangchang No.3 Rd
Shanghai 200436, China
Phone: +86-21-3632-1880 Fax: +86-21-3621-1918
http://www.tungaloy.co.jp/tcts/

Tungaloy Cutting Tool (Thailand) Co.,Ltd.
11th Floor, Sorachai Bldg. 23/7, Soi Sukhumvit 63
Klongtonnue, Wattana, Bangkok 10110, Thailand
Phone: +66-2-714-3130 Fax: +66-2-714-3134
http://www.tungaloy.co.th/

Tungaloy Singapore (Pte.), Ltd.
50 Kallang Avenue #06-03 Noel Corporate Building
Singapore 339505
Phone:+65-6391-1833 Fax:+65-6299-4557
http://www.tungaloy.co.jp/tspl/

Tungaloy India Pvt. Ltd.
Unit#13, B wing, 8th Floor, Kamala Mills Compound
Trade World, Lower Parel (West), Mumbai - 4000 13. India
Phone: +91-22-6124-8804 Fax: +91-22-6124-8899
http://www.tungaloy.co.jp/in/

Tungaloy Korea Co., Ltd
#1312, Byucksan Digital Valley 5-cha
60-73 Gasan-dong, Geumcheon-gu
153-788 Seoul, Korea
Phone:+82-2-6393-8930 Fax:+82-2-6393-8952
http://www.tungaloy.co.jp/kr/

Tungaloy Malaysia Sdn Bhd
50 K-2, Kelana Mall, Jalan SS6/14, Kelana Jaya, 47301
Petaling Jaya, Selangor Darul Ehsan, Malaysia
Phone:+603-7805-3222 Fax:+603-7804-8563
http://www.tungaloy.co.jp/my/

Tungaloy Australia Pty Ltd
Unit 53, 9 Hoyle Avenue
Castle Hill NSW 2154, Australia
Phone:+612-8850-5377 Fax:+612-8850-6988
http://www.tungaloy.co.jp/au

Distributed by:

UKAS QUALITY MANAGEMENT 051 · ISO 9001/14001 · UKAS ENVIRONMENTAL MANAGEMENT 051

ISO 9001 certified	ISO 14001 certified
QC00J0056	EC97J1123
Tungaloy Corporation	Tungaloy Group Japan site and Asian production site
18/10/1996	26/11/1997

Dec. 2010 (TJ)