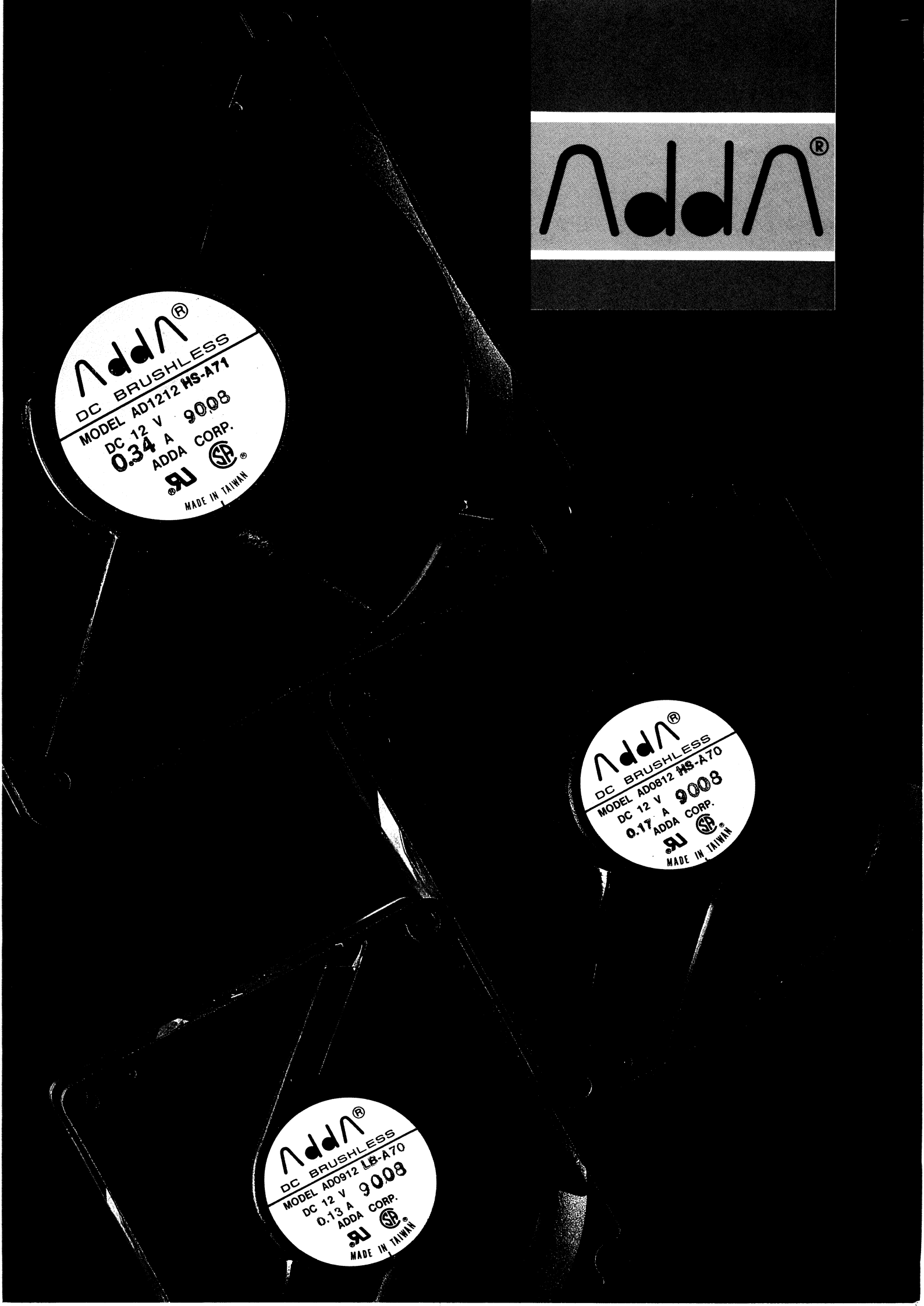
Adda®
Adda®
DC BRUSHLESS
MODEL AD1212 HS-A71
DC 12 V 9008
0.34 A
ADDA CORP.
MADE IN TAIWAN
Adda®
DC BRUSHLESS
MODEL AD0812 HS-A70
DC 12 V 9008
0.17 A
ADDA CORP.
MADE IN TAIWAN
Adda®
DC BRUSHLESS
MODEL AD0912 LB-A70
DC 12 V 9008
0.13 A
ADDA CORP.
MADE IN TAIWAN

ADDA, OFFERS ADVANTAGES IN ITS NEW LINE OF ELECTRICALLY COMMUTATED DC FANS (BRUSHLESS DIRECT CURRENT), OVER OLD FASHION AC MODELS.

LOWER OPERATING VOLTAGES ELIMINATE ELABORATE SAFETY PRECAUTIONS REQUIRED OF AC FANS. LOW INPUT POWER (ONLY A THIRD OF THE POWER OF CORRESPONDING AC FANS).

EXACT REQUIRED AIR FLOW MAY BE SELECTED, ELIMINATING EXCESSIVE COOLING AND UNECESSARY NOISE PRODUCED BY AC FAN FIXED VOLTAGE APPLICATIONS. AIR FLOW REGULATION BY VOLTAGE ADJUSTMENT AS FOLLOWS:

* 3 — 8 VOLTS FOR 5 VDC NOMINAL
* 7 — 16 VOLTS FOR 12 VDC NOMINAL
* 16 — 30 VOLTS FOR 24 VDC NOMINAL
* 42 — 54 VOLTS FOR 48 VDC NOMINAL

DC FANS LAST TWO — THREE TIMES LONGER THAN AC FANS BECAUSE REDUCED THERMAL OPERATING TEMPERATURES INCREASES BEARING LIFE.

DC FANS ARE MANUFACTURED OF SUPER STRONG PLASTIC PBT MATERIAL WITH 30% ADDED FIBER GLASS. THESE FANS REDUCE WEIGHT MORE THAN 50% OF AC DIE CAST FANS.

THE HIGH-TECH DC BRUSHLESS FAN OFFERS MORE ADVANTAGES THAN THE AC FAN WITH SIGNIFICANT COST SAVING.

THE MODERN PRODUCTION METHODS ALONG WITH VERTICAL QUALITY CONTROL ASSURES THE CUSTOMER OF A LONG LIFE TROUBLE FREE COMPONENT. (LIFE EXPECTANTCY OF MORE THAN 50,000 HRS AT 25°C).

MODEL NUMBER CODE

FAN — TYPE: AD-ADDA DC FAN
DIMENSION: 04-40MM, 06-60MM, 08-80MM, 09-90MM, 12-120MM
VOLTAGE: 05-5 VOLTS, 12-12 VOLTS, 24-24 VOLTS, 48-48 VOLTS
SPEED: L-LOW, M-MEDIUM, H-HIGH
BEARING TYPE: S-SLEEVE B-BALL
WIDTH: A-25.4MM, B-32MM, C-20MM, D-15MM, E-13MM, F-38.5MM
IMPELLER: 5-5 BLADE, 7-7 BLADE, 8-8 BLADE
P. C. BOARD: 0-WITHOUT IC, 1-WITH IC

• Specification are subject to change without notice.

AD04

40 × 40 × 13
40 × 40 × 20

SPOT COOLING, ALSO SUITABLE FOR SMALL SPACE REQUIREMENTS-LAP-TOPS AND PC'S

VOLTAGE AVAILABLE			
5	12	24	48
■	■	■	□

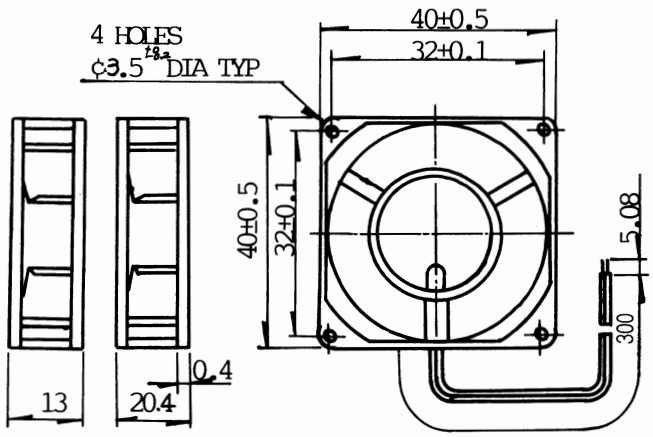

	MODEL	VOLTAGE (V)	CURRENT (Amp)	POWER (W)	SPEED (rpm)	AIR FLOW (CFM)	STATIC PRESSURE (INCH-H20)	SOUND LEVEL (dB A)	WEIGHT (g)
*	AD0412MS-E80	12	0.05	0.60	6000	5.3	0.18	30.0	15.6
	AD0412LS-C70	12	0.10	1.20	5000	3.2	0.095	25.5	33.8
	AD0412MS-C70	12	0.13	1.56	6000	4.2	0.160	29.0	
	AD0412HS-C70	12	0.15	1.8	7000	5.2	0.225	32.5	

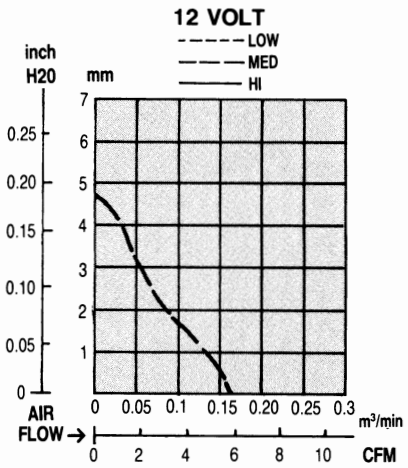

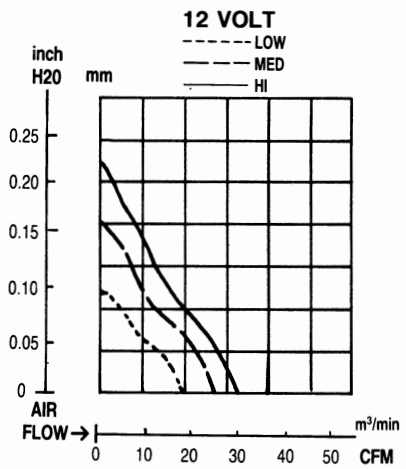

NOTE: THE BEARING TYPE IS NOTED AT THE EIGHTH PLACE IN THE PART NUMBER. "S"—FOR SLEEVE AND "B"—FOR BALL. BOTH TYPES ARE AVAILABLE.

LIFE EXPECTANCY: BALL BEARINGS 50K/HRS AT 25°C, 65%RH. SLEEVE BEARINGS 20K/HRS AT 25°C, 65%RH.

WARRANTY: FAN MOTORS ARE WARRANTED TO BE FREE FROM DEFECTS IN MATERIAL AND WORKMANSHIP FOR ONE YEAR FROM DATE OF DELIVERY.

SAFETY APPROVALS UL EI32139 CSA LR85488 * APPLIED UL

AD06

60 × 60 × 15
60 × 60 × 20
60 × 60 × 25

SUITABLE FOR PC'S WORD PROCESSORS TEST EQUIPMENT AND POWER SUPPLIES.

VOLTAGE AVAILABLE

5	12	24	48
■	■	■	□

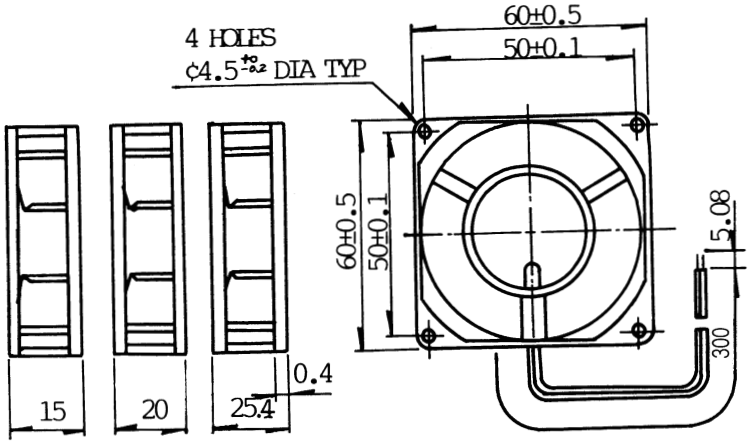

	MODEL	VOLTAGE (V)	CURRENT (Amp)	POWER (W)	SPEED (rpm)	AIR FLOW (CFM)	STATIC PRESSURE (INCH-H20)	SOUND LEVEL (dB A)	WEIGHT (g)
✻	AD0612LS-D70	12	0.10	1.20	3500	11.5	0.10	20.0	20.0
✻	AD0612MS-D70	12	0.07	0.84	3900	13.1	0.11	23.0	
✻	AD0612HS-D70	12	0.08	0.96	4500	16.7	0.17	27.0	
	AD0612LS-C70	12	0.10	1.20	3500	13.6	0.10	21.0	49.2
	AD0612MS-C70	12	0.07	0.84	3900	14.1	0.12	25.0	
	AD0612HS-C70	12	0.08	0.96	4500	17.7	0.19	29.0	
	AD0612LS-A50	12	0.09	1.08	3500	10.0	0.100	27.5	68.0
	AD0612MS-A50	12	0.11	1.32	3900	11.5	0.14	31.0	
	AD0612HS-A50	12	0.13	1.80	4500	13.6	0.185	33.0	
✻	AD0624LS-D70	24	0.08	1.92	3400	10.5	0.10	21.0	20.0
✻	AD0624MS-D70	24	0.10	2.40	3700	13.5	0.12	25.0	
✻	AD0624HS-D70	24	0.07	1.68	4300	16.7	0.19	29.0	
	AD0624MS-C70	24	0.10	2.40	3700	14.1	0.12	25.0	49.2
	AD0624HS-C70	24	0.07	1.68	4300	17.7	0.19	29.0	
	AD0624MS-A50	24	0.10	1.20	3900	14.1	0.12	25.0	68.0
	AD0624HS-A50	24	0.07	1.68	4500	17.7	0.190	29.0	

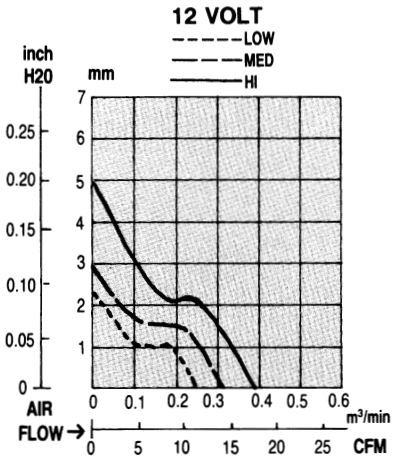

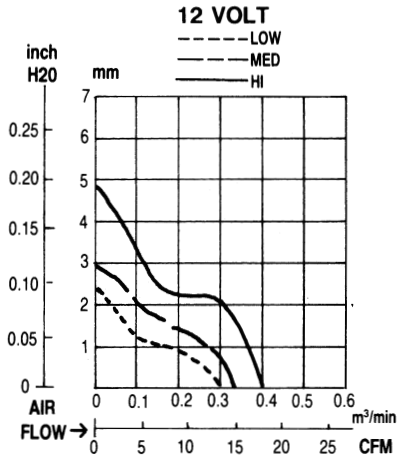

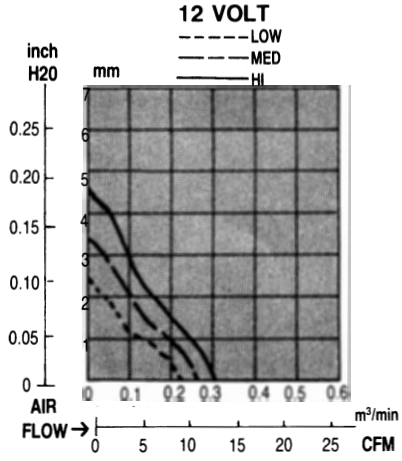

NOTE: THE BEARING TYPE IS NOTED AT THE EIGHTH PLACE IN THE PART NUMBER. "S"—FOR SLEEVE AND "B"—FOR BALL. BOTH TYPES ARE AVAILABLE.

LIFE EXPECTANCY: BALL BEARINGS 50K/HRS AT 25°C, 65%RH. SLEEVE BEARINGS 20K/HRS AT 25°C, 65%RH.

WARRANTY: FAN MOTORS ARE WARRANTED TO BE FREE FROM DEFECTS IN MATERIAL AND WORKMANSHIP FOR ONE YEAR FROM DATE OF DELIVERY.

SAFETY APPROVALS UL E132139 CSA LR85488 ✻ APPLIED UL

AD08

80 × 80 × 20
80 × 80 × 25-5
80 × 80 × 25-7

LARGER AIR FLOW LOWER NOISE.
SUITABLE FOR POWER SUPPLIES
AND MEASURING INSTRUMENTS.

VOLTAGE AVAILABLE			
5	12	24	48
	■	■	

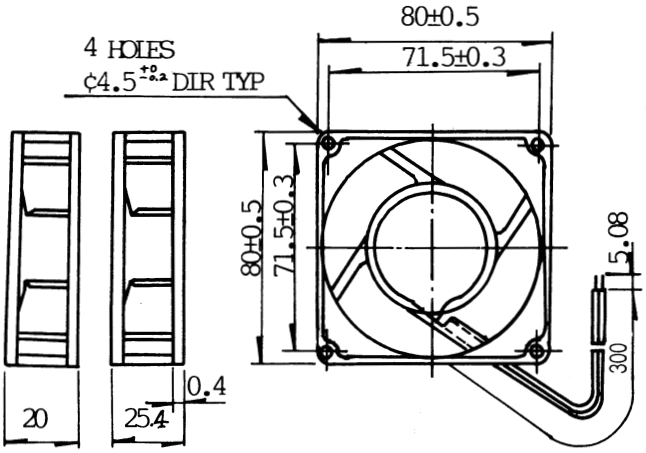

	MODEL	VOLTAGE (V)	CURRENT (Amp)	POWER (W)	SPEED (rpm)	AIR FLOW (CFM)	STATIC PRESSURE (INCH-H20)	SOUND LEVEL (dB A)	WEIGHT (g)
✻	AD0812LS-C70	12	0.09	1.08	2030	26.5	0.07	23.0	70.1
✻	AD0812MS-C70	12	0.12	1.44	2440	30.0	0.10	27.0	
✻	AD0812HS-C70	12	0.17	2.04	3010	37.1	0.15	32.0	
	AD0812LS-A50	12	0.10	1.20	2100	21.0	0.08	25.0	108.8
	AD0812MS-A50	12	0.12	1.44	2550	25.0	0.12	30.0	
	AD0812HS-A50	12	0.17	2.04	3000	30.0	0.165	36.0	
	AD0812LS-A70	12	0.09	1.08	2030	26.5	0.07	23.0	83.2
	AD0812MS-A70	12	0.12	1.44	2440	30.0	0.10	27.0	
	AD0812HS-A70	12	0.17	2.04	3010	37.1	0.15	32.0	
✻	AD0824LS-C70	24	0.08	1.92	2030	26.5	0.07	23.0	70.1
✻	AD0824MS-C70	24	0.12	2.88	2440	30.0	0.10	27.0	
✻	AD0824HS-C70	24	0.17	4.08	3010	37.1	0.15	32.0	
	AD0824LS-A50	24	0.08	1.92	2100	26.0	0.10	25.0	108.8
	AD0824MS-A50	24	0.10	2.40	2550	31.0	0.13	27.0	
	AD0824HS-A50	24	0.12	2.88	3000	36.0	0.18	29.0	
✻	AD0824LS-A70	24	0.08	1.92	2030	26.5	0.07	23.0	83.2
✻	AD0824MS-A70	24	0.12	2.88	2440	30.0	0.10	27.0	
✻	AD0824HS-A70	24	0.17	4.08	3010	37.1	0.15	32.0	

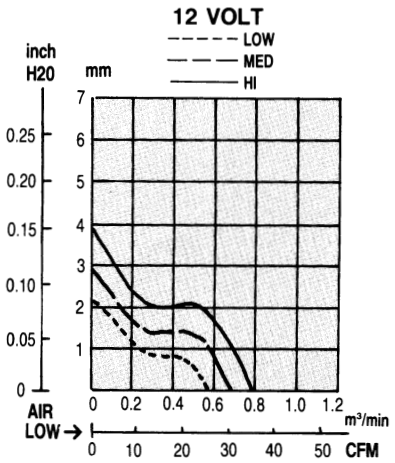

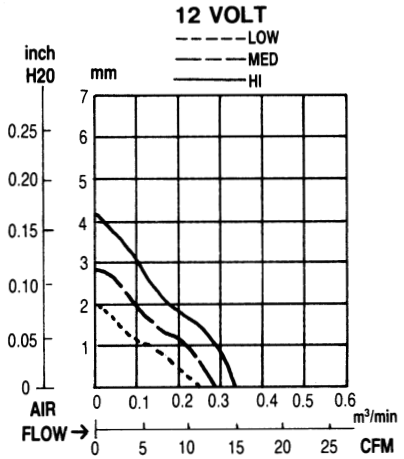

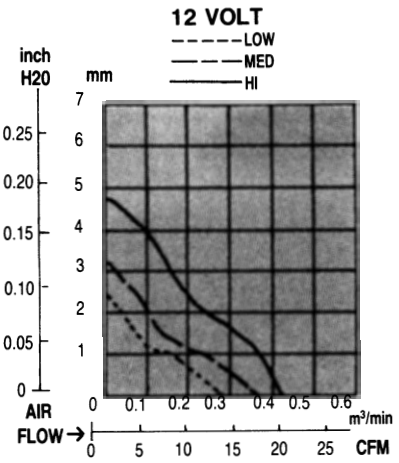

NOTE: THE BEARING TYPE IS NOTED AT THE EIGHTH PLACE IN THE PART NUMBER. "S"—FOR SLEEVE AND "B"—FOR BALL. BOTH TYPES ARE AVAILABLE.

LIFE EXPECTANCY: BALL BEARINGS 50K/HRS AT 25°C, 65%RH. SLEEVE BEARINGS 20K/HRS AT 25°C, 65%RH.

WARRANTY: FAN MOTORS ARE WARRANTED TO BE FREE FROM DEFECTS IN MATERIAL AND WORKMANSHIP FOR ONE YEAR FROM DATE OF DELIVERY.

SAFETY APPROVALS UL E132139 CSA LR85488 ✻ APPLIED UL

AD09

90 × 90 × 20
90 × 90 × 25-5
90 × 90 × 25-7

THIS FAN IS SUITABLE FOR LARGE AIR FLOW, LOW NOISE APPLICATION PERIPHERALS.

VOLTAGE AVAILABLE			
5	12	24	48
	■	■	

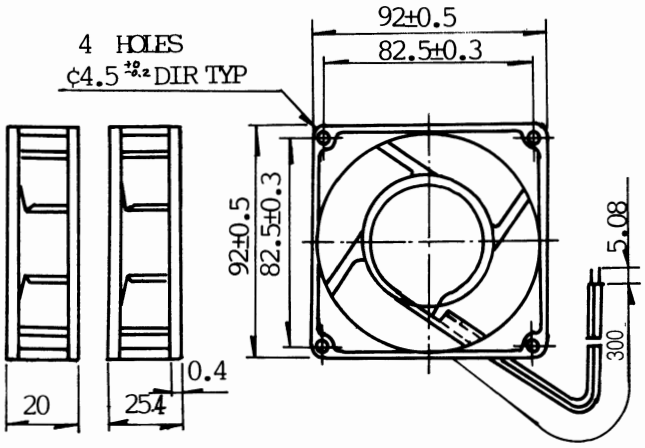

	MODEL	VOLTAGE (V)	CURRENT (Amp)	POWER (W)	SPEED (rpm)	AIR FLOW (CFM)	STATIC PRESSURE (INCH-H20)	SOUND LEVEL (dB A)	WEIGHT (g)
✻	AD0912LS-C70	12	0.13	1.56	2030	34.6	0.09	25.0	85.1
✻	AD0912MS-C70	12	0.16	1.92	2430	41.7	0.14	30.0	
✻	AD0912HS-C70	12	0.22	2.64	2740	47.7	0.17	33.0	
	AD0912LS-A50	12	0.15	1.8	2100	31.5	0.10	31.0	124.6
	AD0912MS-A50	12	0.18	2.16	2550	37.0	0.12	35.0	
	AD0912HS-A50	12	0.26	3.12	3000	43.0	0.17	40.0	
	AD0912LS-A70	12	0.13	1.56	2030	34.6	0.09	25.0	99.0
	AD0912MS-A70	12	0.16	1.92	2430	41.7	0.14	30.0	
	AD0912HS-A70	12	0.22	2.64	2740	47.7	0.17	33.0	
✻	AD0924LS-C70	24	0.08	1.92	2030	34.6	0.09	25.0	85.9
✻	AD0924MS-C70	24	0.10	2.40	2430	41.7	0.14	30.0	
✻	AD0924HS-C70	24	0.10	2.40	2740	47.7	0.17	33.0	
	AD0924LS-A50	24	0.10	2.40	2100	36.0	0.11	27.0	124.6
	AD0924MS-A50	24	0.12	2.88	2550	43.0	0.15	30.0	
	AD0924HS-A50	24	0.14	3.36	3000	50.0	0.19	32.0	
✻	AD0924LS-A70	24	0.10	1.92	2030	34.6	0.09	25.0	99.0
✻	AD0924MS-A70	24	0.10	2.40	2430	41.7	0.14	30.0	
✻	AD0924HS-A70	24	0.08	2.40	2740	47.7	0.17	33.0	

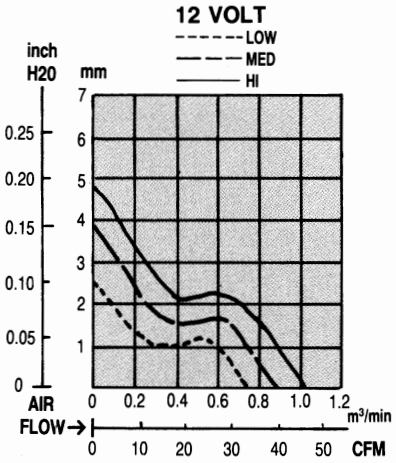

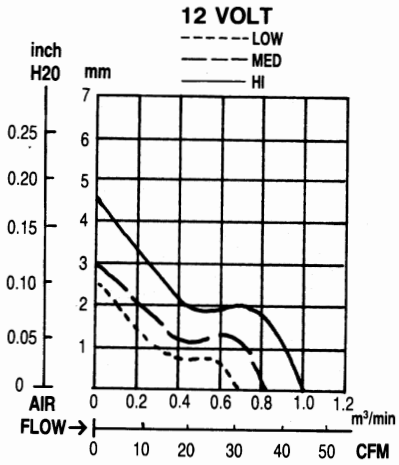

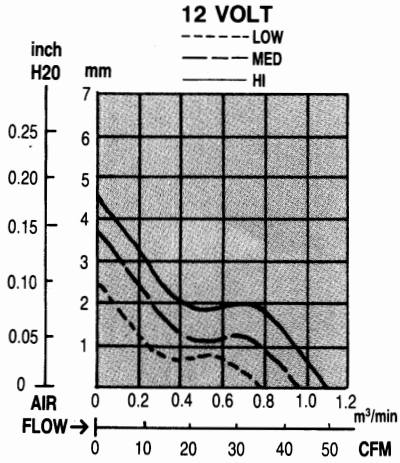

NOTE: THE BEARING TYPE IS NOTED AT THE EIGHTH PLACE IN THE PART NUMBER. "S"—FOR SLEEVE AND "B"—FOR BALL. BOTH TYPES ARE AVAILABLE.

LIFE EXPECTANCY: BALL BEARINGS 50K/HRS AT 25°C, 65%RH. SLEEVE BEARINGS 20K/HRS AT 25°C, 65%RH.

WARRANTY: FAN MOTORS ARE WARRANTED TO BE FREE FROM DEFECTS IN MATERIAL AND WORKMANSHIP FOR ONE YEAR FROM DATE OF DELIVERY.

SAFETY APPROVALS UL E132139 CSA LR85488 ✻ APPLIED UL

AD12

120 × 120 × 25
120 × 120 × 32
120 × 120 × 38.5

IDEA FOR COPY MACHINES & COMPUTERS

VOLTAGE AVAILABLE			
5	12	24	48
	■	■	■

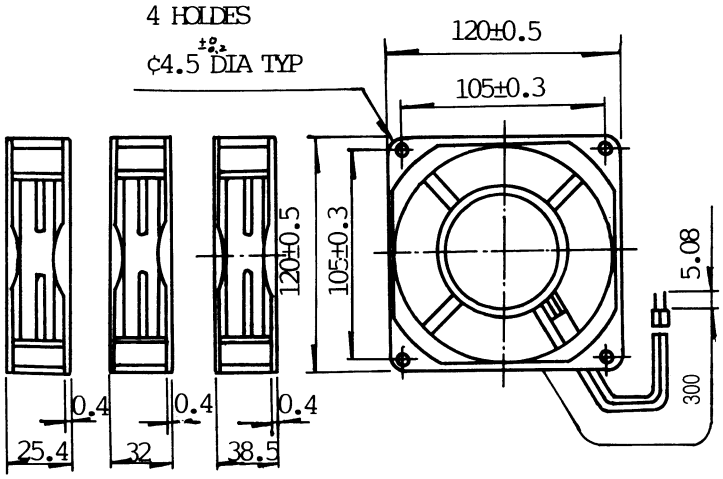

	MODEL	VOLTAGE (V)	CURRENT (Amp)	POWER (W)	SPEED (rpm)	AIR FLOW (CFM)	STATIC PRESSURE (INCH-H20)	SOUND LEVEL (dB A)	WEIGHT (g)
	AD1212LS-A71	12	0.14	1.44	1650	52.9	0.11	35.0	156.0
	AD1212MS-A71	12	0.20	2.04	1950	67.0	0.17	40.0	
	AD1212HS-A71	12	0.34	3.72	2400	84.7	0.25	45.0	
✻	AD1212LS-B51	12	0.25	3.0	1950	70.6	0.15	35.0	222.8
✻	AD1212MS-B51	12	0.35	4.20	2540	84.7	0.21	40.0	
✻	AD1212HS-B51	12	0.45	5.40	2800	95.35	0.29	47.0	
✻	AD1212LS-F51	12	0.24	2.88	1950	67.0	0.12	34.0	270.8
✻	AD1212MS-F51	12	0.35	4.20	2540	84.7	0.21	40.0	
✻	AD1212HS-F51	12	0.45	5.40	2800	95.35	0.29	47.0	
	AD1224LS-A71	24	0.20	1.92	1650	52.9	0.11	35.0	156.0
	AD1224MS-A71	24	0.12	2.80	1950	67.0	0.17	40.0	
	AD1224HS-A71	24	0.19	4.32	2400	84.7	0.25	45.0	
✻	AD1224LS-B51	24	0.10	2.40	1950	70.6	0.15	35.0	222.8
✻	AD1224MS-B51	24	0.20	4.80	2540	84.7	0.21	40.0	
✻	AD1224HS-B51	24	0.30	7.20	2800	95.35	0.29	47.0	
✻	AD1224LS-F51	24	0.14	3.36	1950	67.0	0.13	34.0	270.8
✻	AD1224MS-F51	24	0.21	5.04	2540	84.75	0.21	40.0	
✻	AD1224HS-F51	24	0.27	6.48	2800	95.35	0.25	44.0	

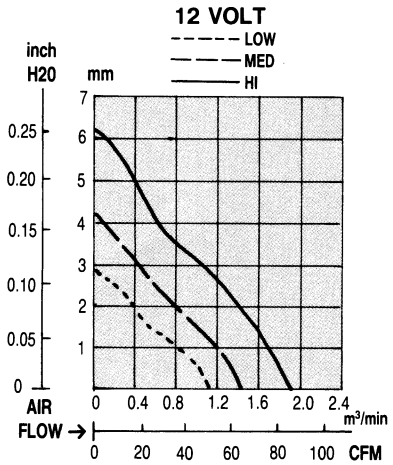

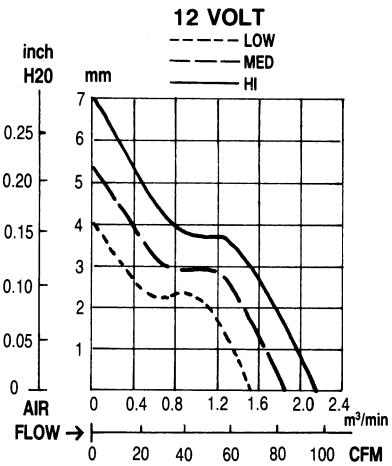

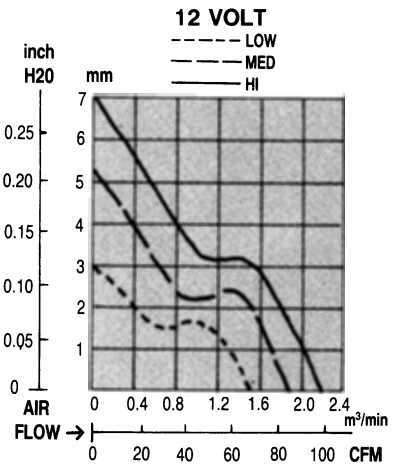

NOTE: THE BEARING TYPE IS NOTED AT THE EIGHTH PLACE IN THE PART NUMBER. "S"—FOR SLEEVE AND "B"—FOR BALL. BOTH TYPES ARE AVAILABLE.

LIFE EXPECTANCY: BALL BEARINGS 50K/HRS AT 25°C, 65%RH. SLEEVE BEARINGS 20K/HRS AT 25°C, 65%RH.

WARRANTY: FAN MOTORS ARE WARRANTED TO BE FREE FROM DEFECTS IN MATERIAL AND WORKMANSHIP FOR ONE YEAR FROM DATE OF DELIVERY.

SAFETY APPROVALS UL E132139 CSA LR85488 ✻ APPLIED UL

AD125

125 BLOWER FAN

HIGH STATIC PRESSURE APPLICATION
UNIVERSAL POSITIONING FAN.

IDEAL FOR COPY MACHINES.

VOLTAGE AVAILABLE			
5	12	24	48
☐	■	■	■

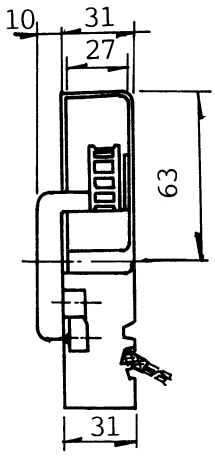

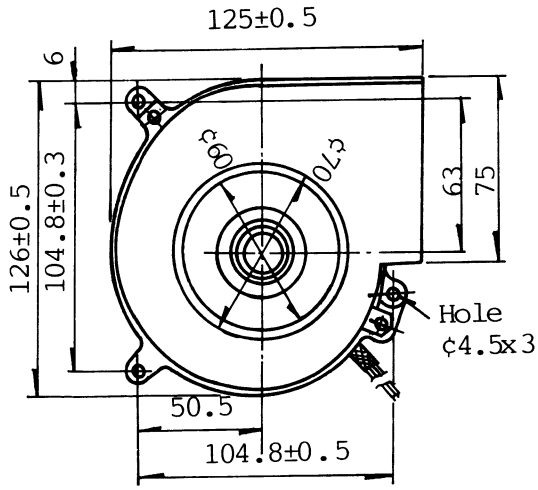

MODEL	VOLTAGE (V)	CURRENT (Amp)	POWER (W)	SPEED (rpm)	AIR FLOW (CFM)	STATIC PRESSURE (INCH-H20)	SOUND LEVEL (dB A)	WEIGHT (g)
AD12512LS	12	0.6	8	2200	15	0.39	40	569.8g
AD12512MS	12	0.8	9	2500	22	0.47	45	
AD12512HS	12	0.9	11	3100	28	0.59	55	
AD12524LS	24	0.35	8	2200	15	0.39	40	
AD12524MS	24	0.45	9	2500	22	0.47	45	
AD12524HS	24	0.49	11	3100	28	0.59	55	

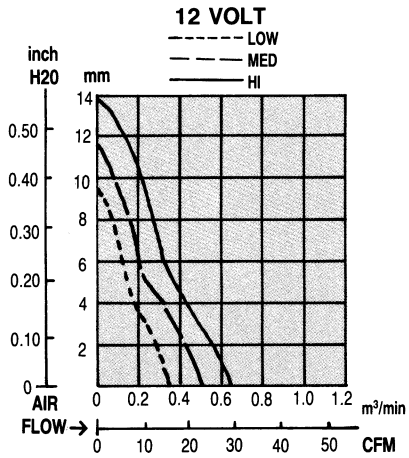

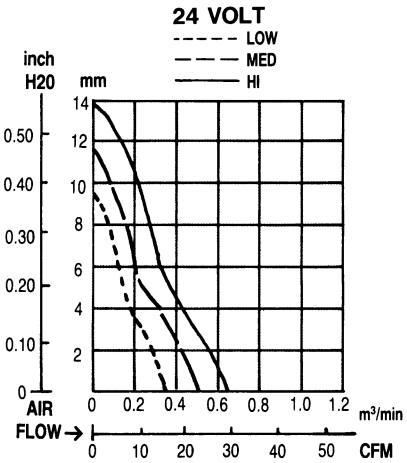

NOTE: THE BEARING TYPE IS NOTED AT THE EIGHTH PLACE IN THE PART NUMBER. "S"—FOR SLEEVE AND "B"—FOR BALL. BOTH TYPES ARE AVAILABLE.

LIFE EXPECTANCY: BALL BEARINGS 50K/HRS AT 25°C, 65%RH. SLEEVE BEARINGS 20K/HRS AT 25°C, 65%RH.

WARRANTY: FAN MOTORS ARE WARRANTED TO BE FREE FROM DEFECTS IN MATERIAL AND WORKMANSHIP FOR ONE YEAR FROM DATE OF DELIVERY.

ACCESSORIES

METAL FINGER GUARD

Designed to ensure safe operation
Comply with UL, CSA and VDE requirement
Choice of 40, 60, 80, 90 and 120mm.
Other size available on request.

DESIGN

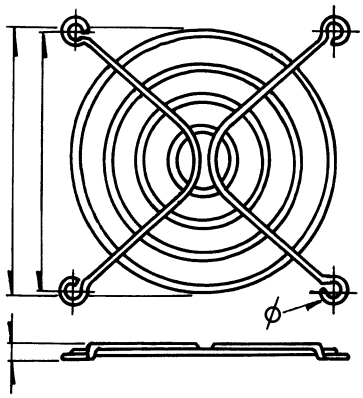

DESCRIPTION

4 point fixation
all guards comply with UL. 25 inch plug gauge test.
Nickel chrome plating.

MODEL NUMBER	FAN SIZE	NO. OF RINGS	HOLE SIZE ø
MFG-04	40MM	2	3.6MM
MFG-06	60MM	4	4.6MM
MFG-08	80MM	5	4.6MM
MFG-09	90MM	5	4.6MM
MFG-12	120MM	7	4.6MM

Screw clip

For mounting fans with self-tapping screw 6-32 UNC or 3.5 DIN 7970.
Made of hardened and tempered steel deburred; surface lightly oiled.

DC Fan Sensor

Summary

DC Fan Sensor issues an alarm signal when the Fan Motor comes to a stop.
Signal power supply is available from DC Fan motor supply.
The signal becomes LOW-LEVEL and HIGH-LEVEL at the time of normal rotation and unusual stopping, respectively.
Therefore, the alarming circuit can be easily arranged by use of ON-OFF signal
Appearance and dimensions of the fan with a sensor are quite the same as those of DC Fan motor except three wire leads are provided.

Features

- Small number of parts and super-high reliability.
- No influence resulting from temperature variation and almost no inside temperature rise.
- No induction is generated to the outside because of elimination of induction supply.
- Less wiring connections at the outside make an alarm display circuit inexpensive.
- Low-priced products based on economical circuit construction and lower man-hours.

Specifications

Item	Specifications
Input voltage	20 VDC or below
Input current	5 mA or below
Ambient conditions	Temperature: −10 to +60 deg C Humidity: RH85% or below
Detecting method	An alarm is issued when the rotation is stopped.
Response speed	Within 10 sec after rotation is stopped.
Reliability	1×10^5 hours or above
Insulation resistance	10 MΩ or above when measured with 500 VDC megger.
Dielectric strength	Test voltage 500 VAC, 50 Hz for one minute.
Note	When the Fan motor is restored to the normal state after an unusual signal was issued by sensor operation, the sensor automatically returns.

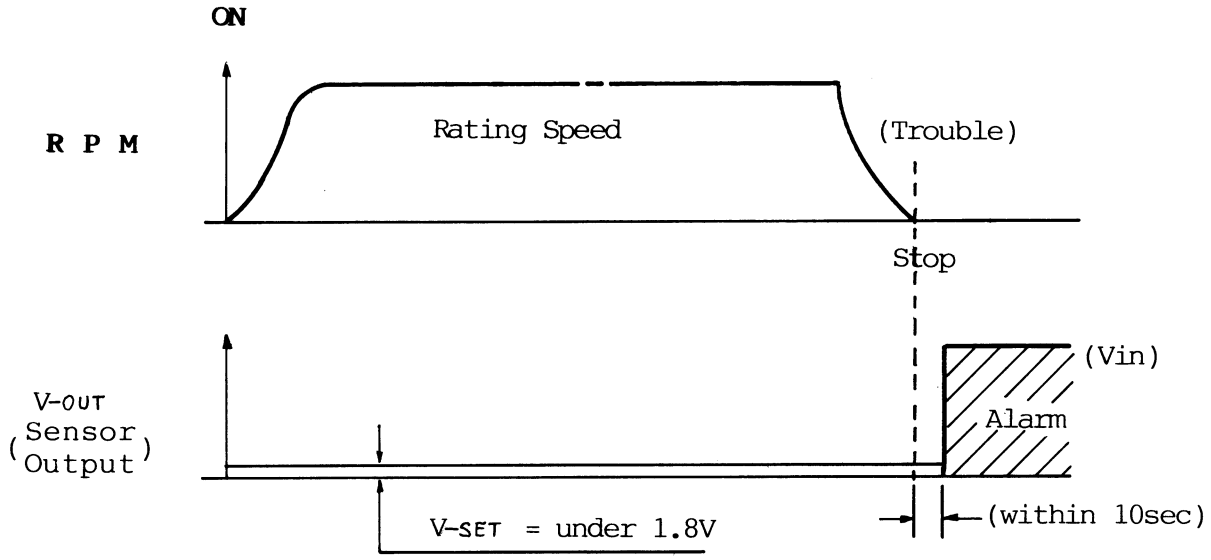

Connection

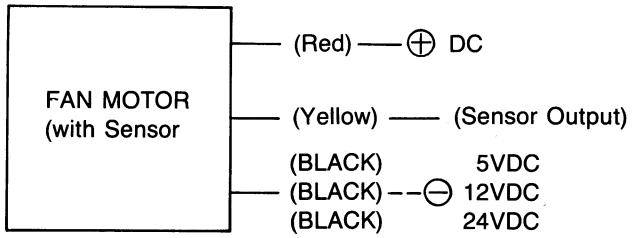

Lead Wire
UL AWM 1007 VW-1
CSA TR-64 AWG #24
Cord Length 300mm:3

Note: S prefixed to the model means "with sensor."

GENERAL SPECIFICATIONS

Dielectric Strength	5mA max. at 500V AC 1 min. between lead wire & outer sect.
Insulation Resistance	10M OHM between lead wire & outer section (DC 500V)
Life Expectation	50.000 hrs min. at temp. 25°C. humidity 65% ± 20%
Operating Temperature	− 10°C ~ + 70°C (+ 14°C ~ + 158°F)
Storage Temperature	− 40°C ~ + 75°C (− 40°F ~ + 167°F)
Weight	VARIES
Protection	Locked rotor protection. polarity protection — IC MODEL
Insulation Class	UL: Class A
Bearing	Ball bearing, SLEEVE BEARING
Lead Wire	UL 1007 AWG24
Casing Impeller	Black PBT (UL 94V-0) − 120-38MM, 125 BLOWER-ALUMINUM CASING

Noise is measured at rated voltage in anechoic chamber in free air as below:

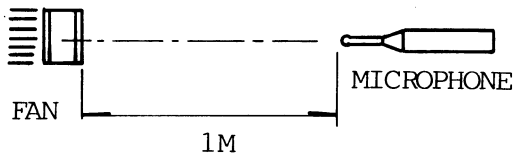

CONNECTOR AND WIRE LEAD STANDARDS

WIRE SIZE AWG. #24 (UL 1007)

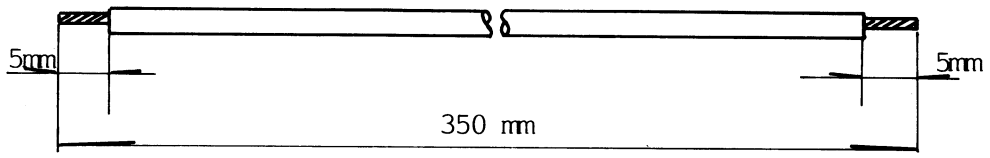

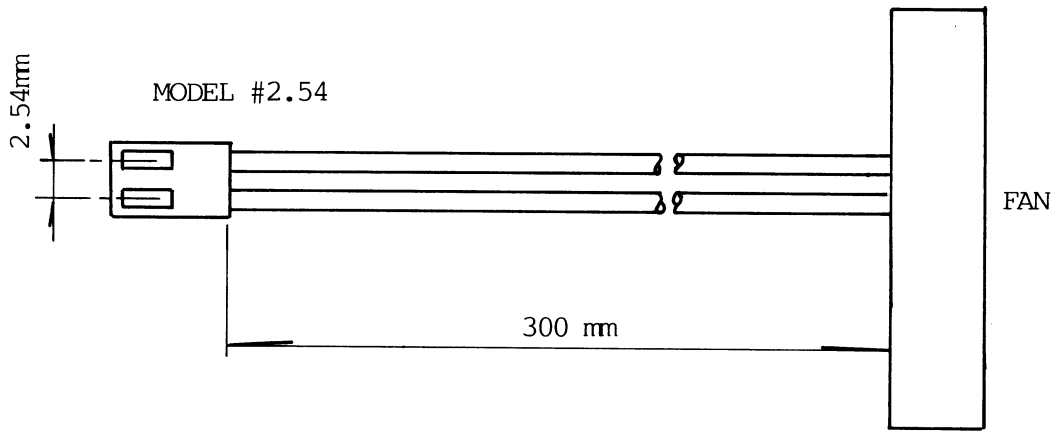

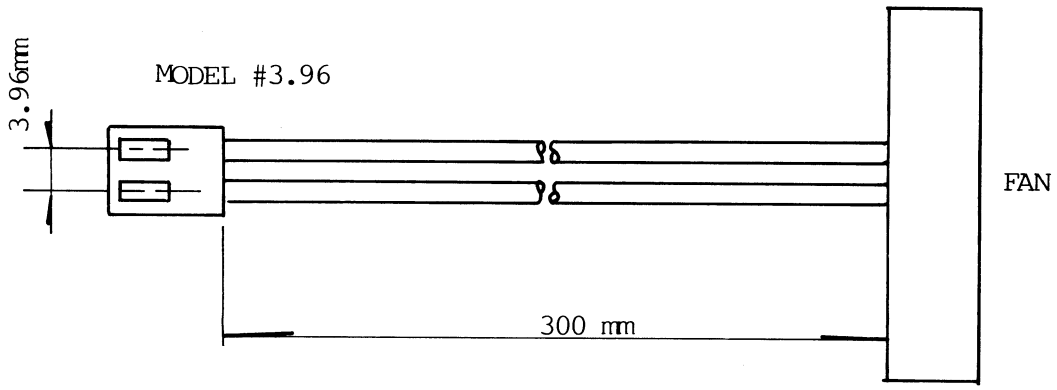

ADDA CORPORATION

International Sales, Factory: 6, East Section Industry 6 Road, Ping Tung City, Taiwan, R.O.C.
TEL: 886-8-7532816-7, 7539178-9 FAX: 886-8-7532815

Domestic Sales Office: 6Fl, 247, Sec. 3, Chung Hsiao E. Rd., Taipei, Taiwan, R.O.C.
TEL: (02)7402638, 7402640, 7511941 FAX: 886-2-7110173