Nidec-Torin

BETA SL™ SLIMLINE

QUICK SELECTOR

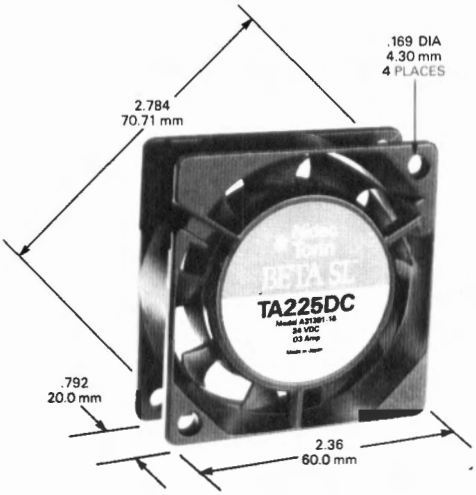

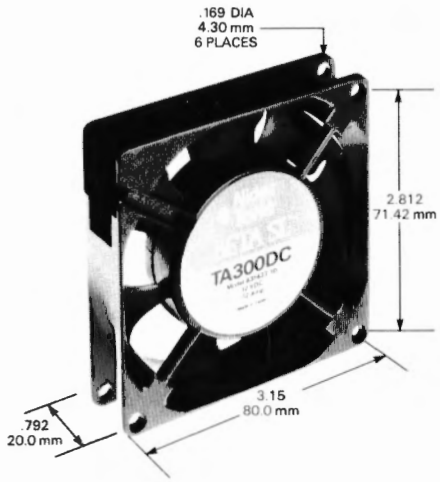

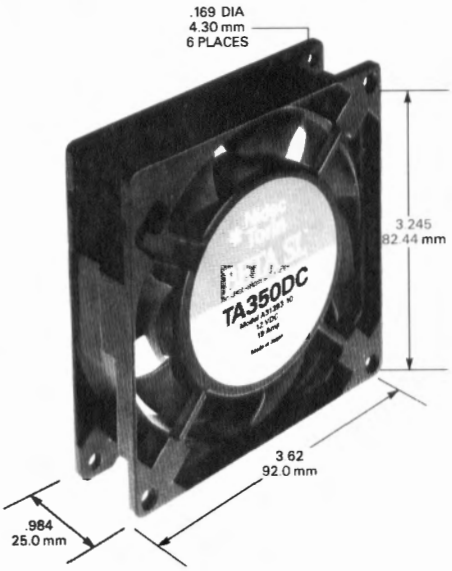

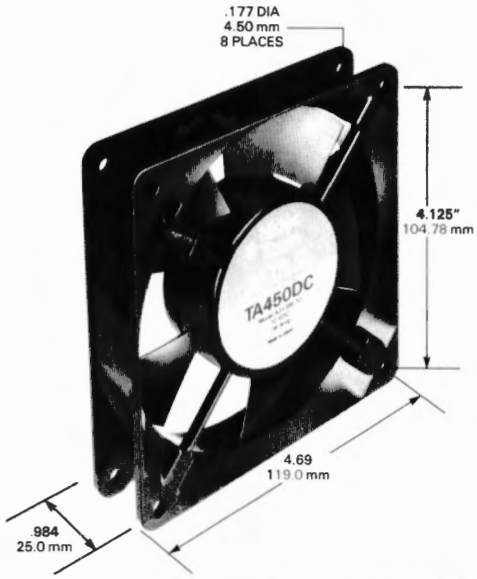

DEVERELL ASSOCIATES
WELLINGTON
REC. 23 MAY 1985
ANSD.....

FEATURES:

Dependable, solid-state, brushless DC motor.
Adjustable air delivery by varying input voltage.
Maintenance-free, permanently lubricated ball bearings.
Minimize EMI and RFI emissions.
Safe, polarity protected.
Electronic sensing Hall effect signal to adjust performance for varying thermal needs.
HOUSING: One-piece, die-cast aluminum for structural integrity. Acts as heat sink to dissipate heat from motor. Plain or black paint finish.
Impeller: One-piece, injection molded, black thermoplastic, rated UL94V-0. Superior mechanical properties and low flammability.
Motor: Brushless DC with permanent magnet rotor and electronically commutated stator with Hall effect sensors.
Connections: Available with color-coded 12-inch (305 mm) leads or spade-pin terminals.
Life Expectancy: Precision, permanently lubricated ball bearings for long, maintenance-free life. (Actual life in any given case depends on operating conditions.)
Reliability backed by Nidec-Torin — a world air force.

Nidec-Torin an air force

100 Franklin Drive, Torrington, CT 06790 (203) 482-4422 JAPAN: Kyoto

Nidec-Torin

BETA SL™ SLIMLINE

QUICK SELECTOR

The advanced series of NIDEC-TORIN BETA SL (Slimline) Brushless DC fans are designed for applications where space is a factor. The BETA SL fans are thinner, smaller, quiet and use less power.
These fans are available in a broad selection of sizes to complement Nidec-Torin's larger size tube axial product line.

Select the size and performance suitable to your needs. For higher air performance see Nidec-Torin' s ALPHA V series catalog.

Specifications:

Type	Model	Volts	Hz	Watts	CFM	NPEL
TA450DC	A31396	12	DC	4.5	78	5.9
	A31397	24	DC	4.5	78	5.9
TA350DC	A31393	12	DC	3.5	37	5.3
	A31394	24	DC	3.5	37	5.3
TA300DC	A31437	12	DC	1.5	24	4.1
	A31436	24	DC	1.5	24	4.1
TA225DC	A31390	12	DC	1.2	8.2	3.7
	A31391	24	DC	1.2	8.2	3.7

Performance:

Fans can be operated within a temperature range of -20°C to +60°C. Typical performance is at rated voltage.

Applications:

Ideal for cooling small computers, terminals, peripherals, copiers, communication systems, portable instruments, medical electronics, and other electronic products and systems.

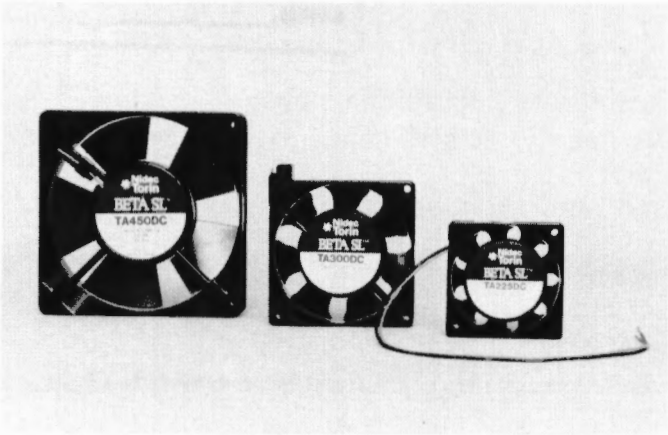

DC Models - at Rated Voltage

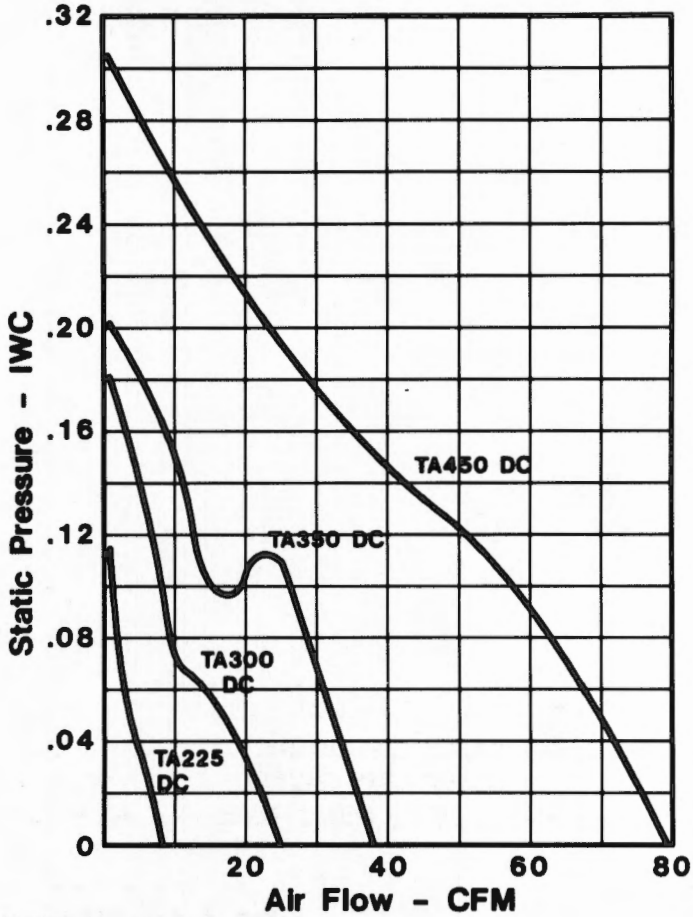

Nidec-Torin an air force

100 Franklin Drive, Torrington, CT 06790 (203) 482-4422 JAPAN: Kyoto

Nidec/Torin

BETA SL™
SLIMLINE

TA225DC
Brushless DC Fan

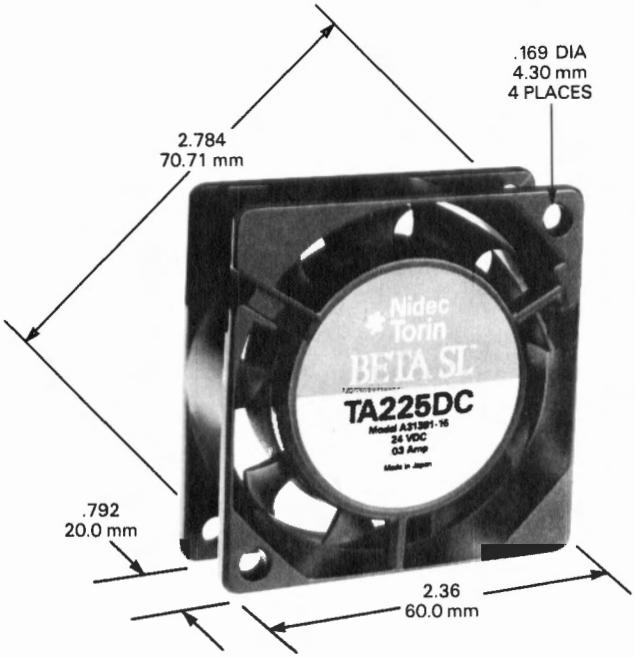

The advanced series of NIDEC-TORIN BETA SL tube axial AC and Brushless DC Fans are thinner, smaller, lighter, quiet, and use less power. The BETA SL TA225DC fan uses a high-efficiency, electronically-commutated brushless DC motor; a one-piece, die-cast aluminum housing; and a one-piece injection molded thermoplastic impeller.

FEATURES:

Small size is only 60x20 mm (2 3/8"x 3/4").

Lightweight construction is 115 gm (0.25 lbs.)

Efficient cooling with 8.2 CFM rating.

Power-saving 12 and 24 volt models, 1.2 watts.

Quiet operation with acoustic rating of 3.7 NPEL.

Dependable solid-state, brushless DC motor.

Adjustable air delivery by varying input voltage.

Maintenance-free, permanently lubricated ball bearings.

Minimize EMI and RFI emissions.

Safe, polarity protected.

Electronic sensing Hall effect signal to adjust performance for varying thermal needs.

Reliability backed by Nidec-Torin—a world air force.

APPLICATIONS:

Ideal for small computers, terminals, peripherals, copiers, communication systems, portable instruments, medical electronics, other electronic products and systems, and as a back-up cooling device.

ELEMENTS:

Housing: One-piece, die-cast aluminum for structural integrity. Acts as heat sink to dissipate heat from motor. Plain or black paint finish.

Impeller: One-piece, injection molded, black thermoplastic, rated UL94V-0. Superior mechanical properties and low flammability.

Motor: Brushless DC with permanent magnet rotor and electronically commutated stator with Hall effect sensors.

Connections: Available with color-coded 12-inch (305 mm) leads or spade-pin terminals.

Operating Conditions: Recommended temperature range: –20°C to +70°C

Life Expectancy: Precision, permanently lubricated ball bearings for long, maintenance-free life. (Actual life in any given case depends on operating conditions.)

Weight: 115 gm (0.25 lbs.)

Preliminary Performance at Nominal Voltage

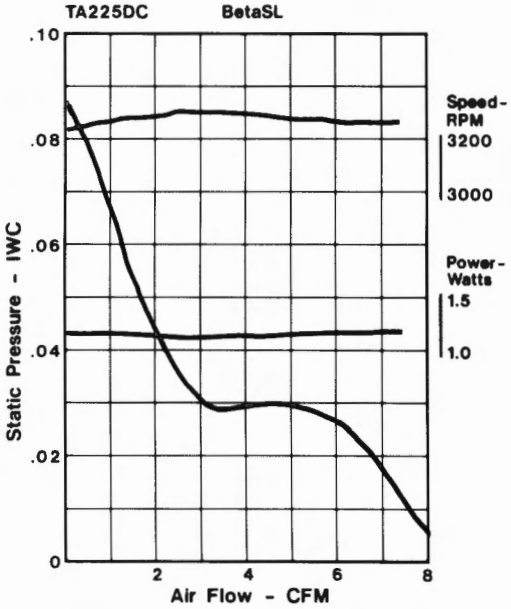

MODELS

Model No.	Voltage	Watts	CFM*	RPM
A31390	12	1.2	8.2	3250
A31391	24	1.2	8.2	3250

*CFM rated at zero Static Pressure

DEVERELL ASSOCIATES
WELLINGTON
REC. 23 MAY 1985
ANSD.

Nidec/Torin an air force

100 Franklin Drive, Torrington, CT 06790 (203) 482-4422 JAPAN: Kyoto

Nidec-Torin

BETA SL™
SLIMLINE

TA300DC
Brushless DC Fan

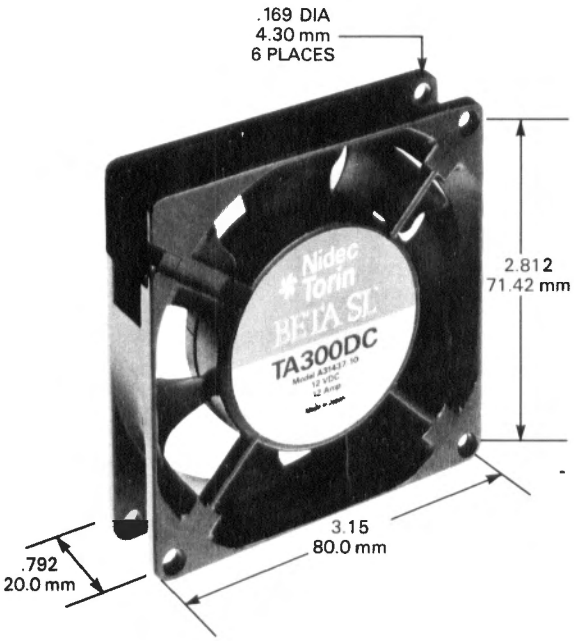

The advanced series of NIDEC-TORIN BETA SL tube axial AC and Brushless DC Fans are thinner, smaller, light, quiet, and use less power. The BETA SL TA300DC fan uses a high-efficiency, electronically commutated brushless DC motor; a one-piece, die-cast aluminum housing; and a one-piece injection molded thermoplastic impeller. It delivers the same performance as similar ¾" thick AC fans.

FEATURES:

Small size is only 80x20 mm (3⅛"x¾").

Lightweight construction is 145 gm (0.32 lbs.)

Efficient cooling with 24 CFM rating.

Power-saving 12 and 24 volt models, 1.5 watts.

Quiet operation with acoustic rating of 4.1 NPEL.

Dependable, solid-state, brushless DC motor.

Adjustable air delivery by varying input voltage.

Maintenance-free, permanently lubricated ball bearings.

Minimize EMI and RFI emissions.

Safe, polarity protected.

Electronic sensing Hall effect signal to adjust performance for varying thermal needs.

Reliability backed by Nidec-Torin—a world air force.

APPLICATIONS:

Ideal for small computers, terminals, peripherals, copiers, communication systems, portable instruments, medical electronics, other electronic products and systems, and as a back-up cooling device.

ELEMENTS:

Housing: One-piece, die-cast aluminum for structural integrity. Acts as heat sink to dissipate heat from motor. Plain or black paint finish.

Impeller: One-piece, injection molded, black thermoplastic, rated UL94V-0. Superior mechanical properties and low flammability.

Motor: Brushless DC with permanent magnet rotor and electronically commutated stator with Hall effect sensors.

Connections: Available with color-coded 12-inch (305 mm) leads or spade-pin terminals.

Operating Conditions: Recommended temperature range: –20°C to +70°C

Life Expectancy: Precision, permanently lubricated ball bearings for long, maintenance-free life. (Actual life in any given case depends on operating conditions.)

Weight: 145 gm (0.32 lbs.)

Preliminary Performance at Nominal Voltage

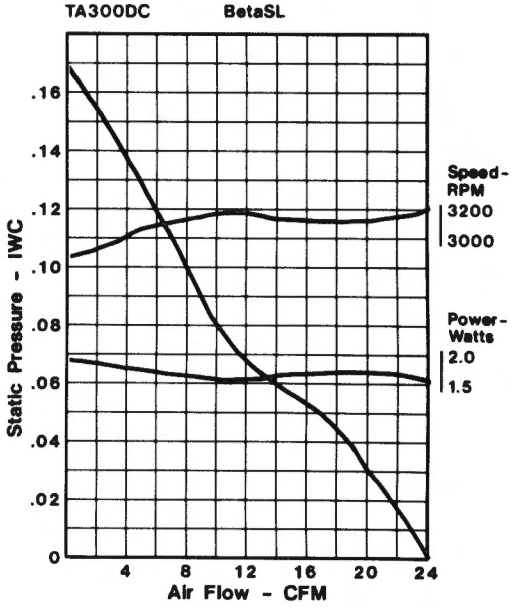

MODELS

Model No.	Voltage	Watts	CFM*	RPM
A31437	12	1.5	24	3200
A31436	24	1.5	24	3200

*CFM rated at zero Static Pressure

DEVERELL ASSOCIATES
WELLINGTON
REC. 23 MAY 1985
ANSD

Nidec-Torin an air force

100 Franklin Drive, Torrington, CT 06790 (203) 482-4422 JAPAN: Kyoto

0484 B5K

Printed in U.S.A.

Nidec-Torin

BETA SL™
SLIMLINE

TA350DC
Brushless DC Fan

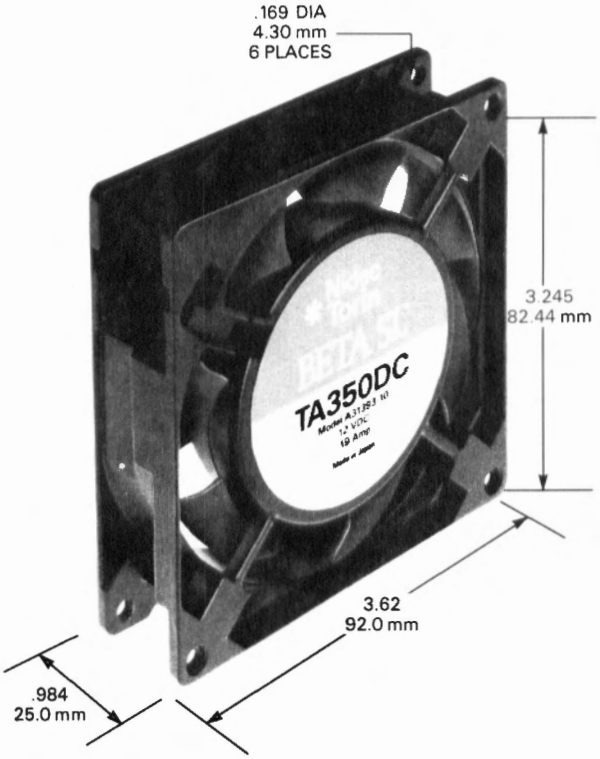

The advanced series of NIDEC-TORIN BETA SL tube axial AC and Brushless DC Fans are thinner, smaller, lighter, quiet, and use less power. The BETA SL TA350DC fan uses a high-efficiency, electronically commutated brushless DC motor; a one-piece, die-cast aluminum housing; and a one-piece injection molded thermoplastic impeller. It delivers the same performance as similar 1-inch thick AC fans.

FEATURES:

Small size is only 92x25 mm (3⅝"x1").
Lightweight construction is 220 gm (0.48 lbs.)
Efficient cooling with 37 CFM rating.
Power-saving 12 and 24 volt models, 3.5 watts.
Quiet operation with acoustic rating of 5.3 NPEL.
Dependable, solid-state, brushless DC motor.
Adjustable air delivery by varying input voltage.
Maintenance-free, permanently lubricated ball bearings.
Minimize EMI and RFI emissions.
Safe, polarity protected.
Electronic sensing Hall effect signal to adjust performance for varying thermal needs.
Reliability backed by Nidec-Torin—a world air force.

APPLICATIONS:

Ideal for small computers, terminals, peripherals, copiers, communication systems, portable instruments, medical electronics, other electronic products and systems, and as a back-up cooling device.

ELEMENTS:

Housing: One-piece, die-cast aluminum for structural integrity. Acts as heat sink to dissipate heat from motor. Plain or black paint finish.

Impeller: One-piece, injection molded, black thermoplastic, rated UL94V-0. Superior mechanical properties and low flammability.

Motor: Brushless DC with permanent magnet rotor and electronically commutated stator with Hall effect sensors.

Connections: Available with color-coded 12-inch (305 mm) leads or spade-pin terminals.

Operating Conditions: Recommended temperature range: –20°C to +70°C

Life Expectancy: Precision, permanently lubricated ball bearings for long, maintenance-free life. (Actual life in any given case depends on operating conditions.)

Weight: 220 gm (0.48 lbs.)

Preliminary Performance at Nominal Voltage

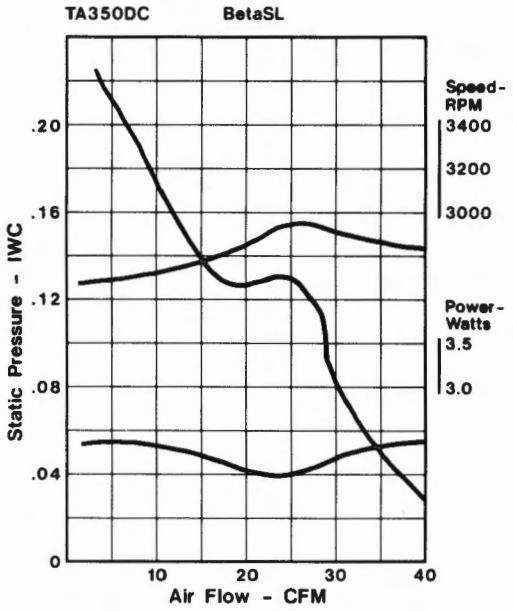

MODELS

Model No.	Voltage	Watts	CFM*	RPM
A31393	12	3.5	37	3100
A31394	24	3.5	37	3100

*CFM rated at zero Static Pressure

DEVERELL ASSOCIATES
WELLINGTON
REC 23 MAY 1985
ANSD.

Nidec-Torin an air force
100 Franklin Drive, Torrington, CT 06790 (203) 482-4422 JAPAN: Kyoto

Printed in U.S.A.

Nidec-Torin

BETA SL™
SLIMLINE

TA450DC
Brushless DC Fan

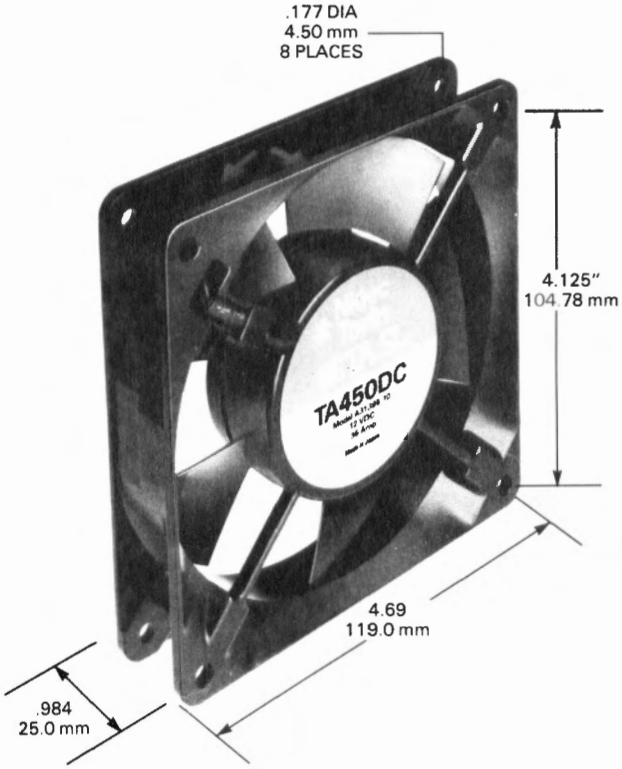

The advanced series of NIDEC-TORIN BETA SL tube axial AC and Brushless DC Fans are thinner, smaller, lighter, quiet, and use less power. The BETA SL TA450DC fan uses a high efficiency, electronically commutated brushless DC motor; a one-piece, die-cast aluminum housing; and a one-piece injection molded thermoplastic impeller. It delivers the same performance as similar 1-inch thick AC fans.

FEATURES:

Small size is only 119x25 mm (4 11/16"x1").
Lightweight construction is 255 gm (0.56 lbs.)
Efficient cooling with 78 CFM rating.
Power-saving 12 and 24 volt models, 4.5 watts.
Quiet operation with acoustic rating of 5.9 NPEL.
Dependable, solid-state, brushless DC motor.
Adjustable air delivery by varying input voltage.
Maintenance-free, permanently lubricated ball bearings.
Minimize EMI and RFI emissions.
Safe, polarity protected.
Electronic sensing Hall effect signal to adjust performance for varying thermal needs.
Reliability backed by Nidec-Torin—a world air force.

APPLICATIONS:

Ideal for small computers, terminals, peripherals, copiers, communication systems, portable instruments,medical electronics, other electronic products and systems, and as a back-up cooling device.

ELEMENTS:

Housing: One-piece, die-cast aluminum for structural integrity. Acts as heat sink to dissipate heat from motor. Plain or black paint finish.

Impeller: One-piece, injection molded, black thermoplastic, rated UL94V-0. Superior mechanical properties and low flammability.

Motor: Brushless DC with permanent magnet rotor and electronically commutated stator with Hall effect sensors.

Connections: Available with color-coded 12-inch (305 mm) leads or spade-pin terminals.

Operating Conditions: Recommended temperature range: –20°C to +70°C

Life Expectancy: Precision, permanently lubricated ball bearings for long, maintenance-free life. (Actual life in any given case depends on operating conditions.)

Weight: 255 gm (0.56 lbs.)

Preliminary Performance at Nominal Voltage

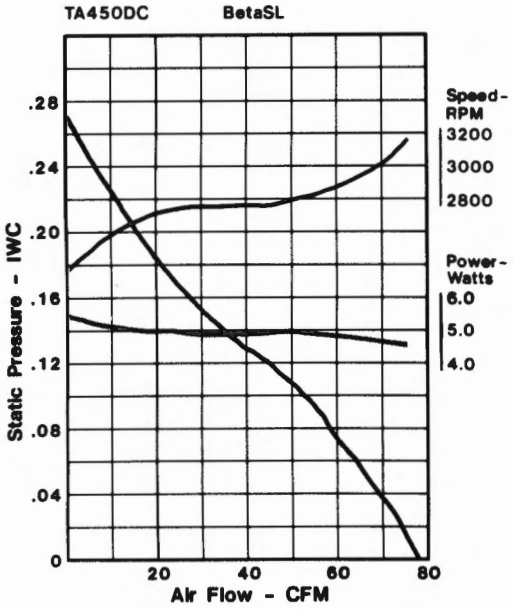

MODELS

Model No.	Voltage	Watts	CFM*	RPM
A31396	12	4.5	78	3160
A31397	24	4.5	78	3160

*CFM rated at zero Static Pressure

DEVERELL ASSOCIATES
WELLINGTON
REC. 23 MAY 1985
ANSD.....

Nidec-Torin an air force
100 Franklin Drive, Torrington, CT 06790 (203) 482-4422 JAPAN: Kyoto

Nidec-Torin

DEVERELL ASSOCIATES
WELLINGTON
REC. 23 MAY 1985

TA450DC

ANSD..... Model	A31256	A31257	A31664
	9.5V	19V	38V
— —	12V	24V	48V
———	14V	28V	56V

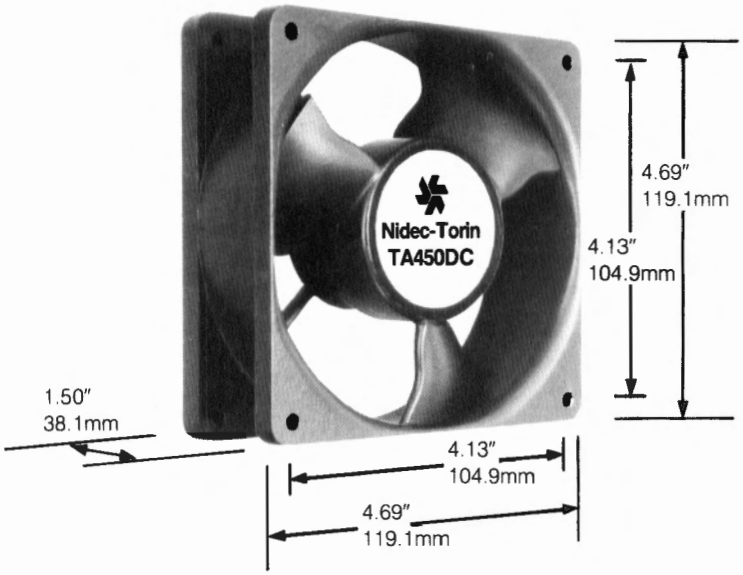

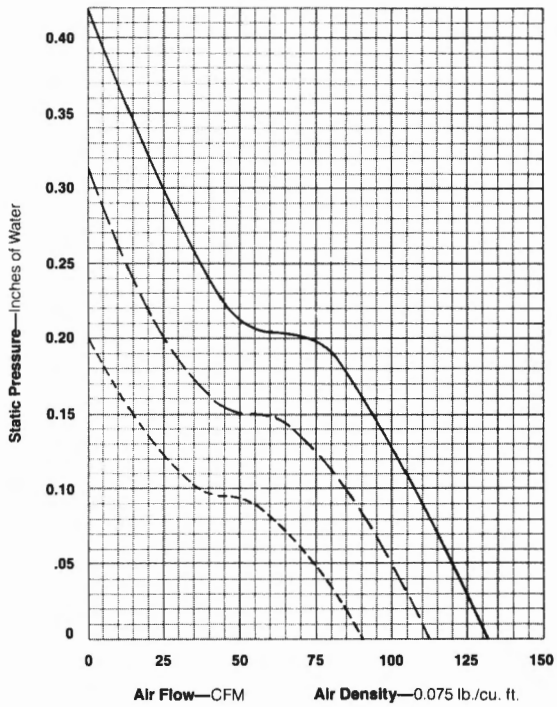

The TA450 DC utilizes a high efficiency, electronic commutated brushless DC motor design. It fits in the standard 4.5 inch frame size delivering the same performance as similar AC fans and permits variable air delivery by adjusting the input voltage. It can be applied in products where stand-by cooling is required during AC power failure. Our brushless DC fan eliminates the need for agency approvals, consumes considerably less power, and reduces EMI and RFI emissions found in AC products. It is polarity protected. The electronic sensing Hall effect signal can be tapped to a control circuit to adjust performance for varying thermal needs and tailor air and sound in stand-by modes. This one product provides an opportunity to standardize and deal with the needs of worldwide fan applications.

It can be adapted to most computer or electronic business machines where DC power is available including computer peripherals, communication systems, portable instruments, and other electronic devices.

Models

Model No.	Voltage	AMPS	Watts	RPM	CFM*	NPEL
A31256	12	.42	5.5	3200	112	5.7
A31257	24	.21	5.5	3200	112	5.7
A31664	48	.11	5.5	3200	112	5.7

*CFM rated at zero Static Pressure

Elements

Housing: One-piece die casting which provides structural integrity and acts as a heat sink in dissipating heat from the motor. Finish is plain or black paint.

Impeller: One-piece injected molded black thermoplastic, rated UL94V-O. This material has been selected for its low flammability and superior mechanical properties.

Motor: Brushless DC incorporates a permanent magnet rotor and electronically commutated stator with Hall effect sensors.

Connections: Available with color-coded 12 inch (305mm) leads or with spade-pin terminals.

Operating conditions: The recommended temperature range is −20°C to +70°C

Life expectancy: Designed with precision, permanently lubricated ball bearings for long maintenance-free life. Actual life in any given case will depend upon operating conditions.

Weight: 1.2 pounds (.54 kg)

Nidec-Torin Corporation Franklin Drive • Torrington, CT 06790 • (203) 482-4422 • Telex: 643963

United States: Torrington, Connecticut
Japan: Kyoto

Nidec-Torin

DEVERELL ASSOCIATES
WELLINGTON
REC. 23 MAY 1985
ANSD.

TA450SDC

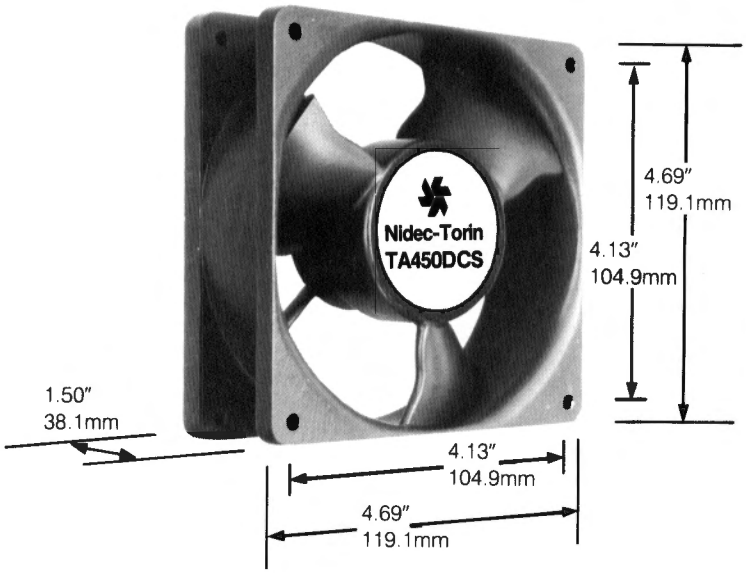

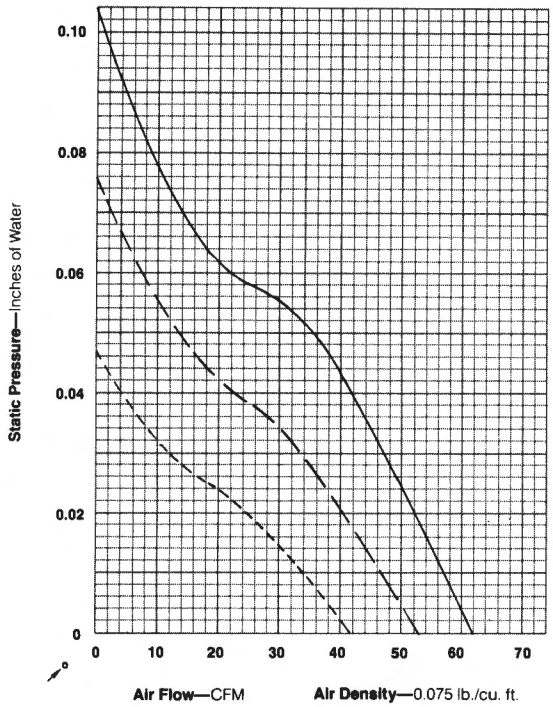

The TA450 DC utilizes a high efficiency, electronic commutated brushless DC motor design. It fits in the standard 4.5 inch frame size delivering the same performance as similar AC fans and permits variable air delivery by adjusting the input voltage. It can be applied in products where stand-by cooling is required during AC power failure. Our brushless DC fan eliminates the need for agency approvals, consumes considerably less power, and reduces EMI and RFI emissions found in AC products. It is polarity protected. The electronic sensing Hall effect signal can be tapped to a control circuit to adjust performance for varying thermal needs and tailor air and sound in stand-by modes. This one product provides an opportunity to standardize and deal with the needs of worldwide fan applications.

It can be adapted to most computer or electronic business machines where DC power is available including computer peripherals, communication systems, portable instruments, and other electronic devices.

Models

Model No.	Voltage	AMPS	Watts	RPM	CFM*	NPEL
A31668	12	.12	1.2	1560	52	4.2
A31787	24	.06	1.2	1560	52	4.2

*CFM rated at zero Static Pressure

Elements

Housing: One-piece die casting which provides structural integrity and acts as a heat sink in dissipating heat from the motor. Finish is plain or black paint.

Impeller: One-piece injected molded black thermoplastic, rated UL94V-O. This material has been selected for its low flammability and superior mechanical properties.

Motor: Brushless DC incorporates a permanent magnet rotor and electronically commutated stator with Hall effect sensors.

Connections: Available with color-coded 12 inch (305mm) leads or with spade-pin terminals.

Operating conditions: The recommended temperature range is -20°C to +70°C

Life expectancy: Designed with precision, permanently lubricated ball bearings for long maintenance-free life. Actual life in any given case will depend upon operating conditions.

Weight: 1.2 pounds (.54 kg)

Nidec-Torin Corporation Franklin Drive • Torrington, CT 06790 • (203) 482-4422 • Telex: 643963

United States: Torrington, Connecticut
Japan: Kyoto

Nidec-Torin

DEVERELL ASSOCIATES
WELLINGTON
REC. 23 MAY 1985
ANSD.

TA500DC

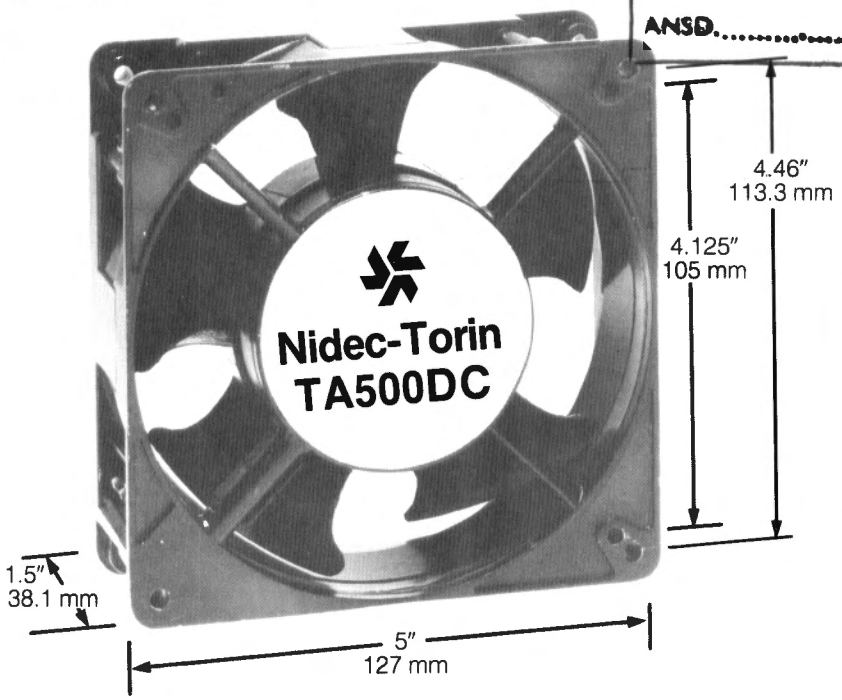

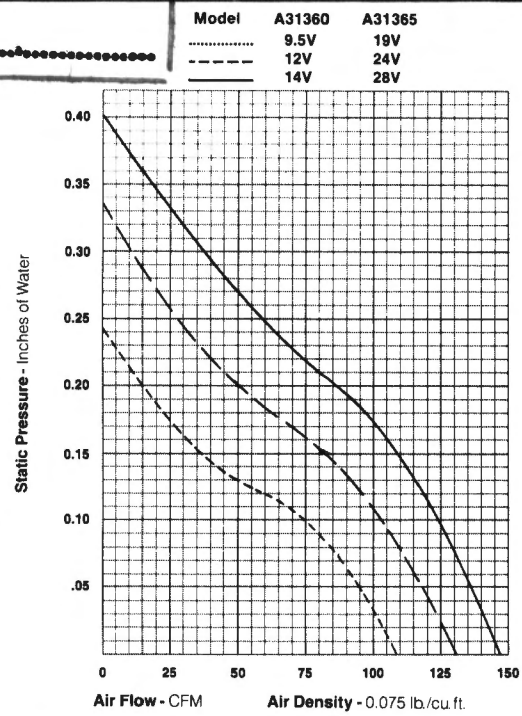

The TA 500DC utilizes a high efficiency, electronic commutated brushless DC motor design. It fits in the standard 5 inch frame size delivering the same performance as similar AC fans and permits variable air delivery by adjusting the input voltage. It can be applied in products where stand-by cooling is required during AC power failure. Our brushless DC fan eliminates the need for agency approvals, consumes considerably less power, and reduces EMI emissions found in AC products. It is polarity protected. The electronic sensing Hall effect signal can be tapped to a control circuit to adjust performance for varying thermal needs and tailor air and sound in stand-by modes. This one product provides an opportunity to standardize and deal with the needs of worldwide fan applications.

It can be adapted to most computer or electronic business machines where DC power is available including computer peripherals, communication systems, portable instruments, and other electronic devices.

The TA500 may be mounted directly to a panel from either face using four .180" (4.57mm) diameter holes, 4.46" (113.3mm) on centers, or three .156" (3.96mm) 4.125" (105mm) on centers. This later mounting is interchangeable with present four and one half inch units.

Models

Model No.	Voltage	AMPS	Watts	RPM	CFM*	NPEL
A31360	12	.70	9.5	3000	131	5.8
A31365	24	.35	9.5	3000	131	5.8

*CFM rated at zero Static Pressure

Elements

Housing: One-piece die casting which provides structural integrity and acts as a heat sink in dissipating heat from the motor. Finish is plain or black paint.

Impeller: One-piece injected molded black thermoplastic, rated UL94V-O. This material has been selected for its low flammability and superior mechanical properties.

Motor: Brushless DC incorporates a permanent magnet rotor and electronically commutated stator with Hall effect sensors.

Connections: Available with color-coded 12 inch (305mm) leads or with spade-pin terminals.

Operating conditions: The recommended temperature range is −20°C to +60°C.

Life expectancy: Designed with precision, permanently lubricated ball bearings for long maintenance-free life. Actual life in any given case will depend upon operating conditions.

Weight: 1.6 pounds (.73 kg)

Nidec-Torin Corporation Franklin Drive • Torrington, CT 06790 • (203) 482-4422 • Telex: 643963

United States: Torrington, Connecticut
Japan: Kyoto

Nidec-Torin

DEVERELL ASSOCIATES
WELLINGTON
REC. 23 MAY 1985
ANSD.

TA600S

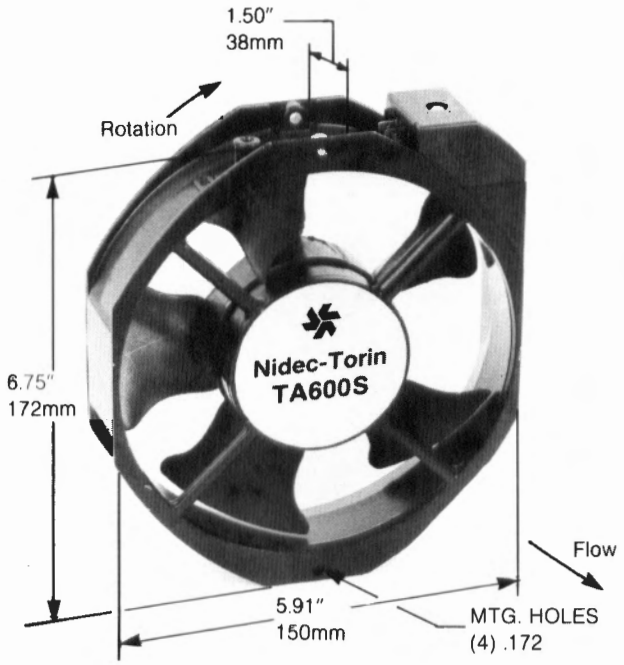

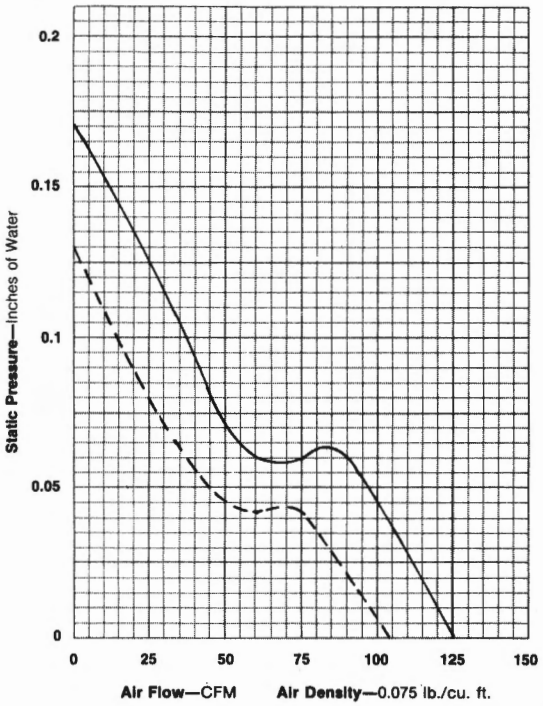

Features: The TA600S has a high CFM per watt ratio relative to other units of this type. It is used to provide cooling air in business machines and electronic equipment. Its efficient operation and convenient size will make it applicable in many other uses.

The TA600S is only one and one half inches thick, making it one of the thinnest units of its size and the same thickness as Nidec-Torin's TA450 and TA500 units.

Agency Approvals: The TA600S Model as been submitted for U.L. Component Recognition and CSA Certification.

Model	Voltage	HZ.	Phase	RPM	CFM	Amps.	Watts	NPEL	PSIL	Weight
A31669-10	115	50/60	1	1400/1650	105/120	.185/.165	18/16	*4.7	*34	2.2 Lbs. 1.0 Kg.

*NPEL and PSIL Sound Data @ 115V-60Hz. Wide open

Elements

Housing: One-piece zinc die casting which provides strength and acts as a heat sink for the motor.

Impeller: Airfoil configuration for optimum performance, low noise. One piece injection molded black thermoplastic polyester. This material has been selected for its ability to operate properly within the unit's stress and temperature requirements. Meets UL flammability requirement. 94V-O.

Motor: Impedance Protected permanent split capacitor type, designed as an integral part of the unit.

Terminal: Two 0.110" (2.79mm) X 0.025" (0.64mm) spade pins loacted on 5/16" (7.9mm) centers are held in a Valox 94V-O base.

Bearing system: The ball bearings are double-shielded electric motor quality bearings, press fitted into the rotor.

Operating conditions: The recommended operating temperature range is -40°C to +60°C.

Life expectancy: Designed with precision, permanently lubricated ball bearings for long maintenance-free life. Actual life in any given case will depend upon operating conditions.

Nidec-Torin Corporation Franklin Drive • Torrington, CT 06790 • (203) 482-4422 • Telex: 643963

United States: Torrington, Connecticut
Japan: Kyoto

Nidec-Torin

DEVERELL ASSOCIATES
WELLINGTON
REC. 23 MAY 1985
ANSD.

TA600DC

Preliminary Specifications

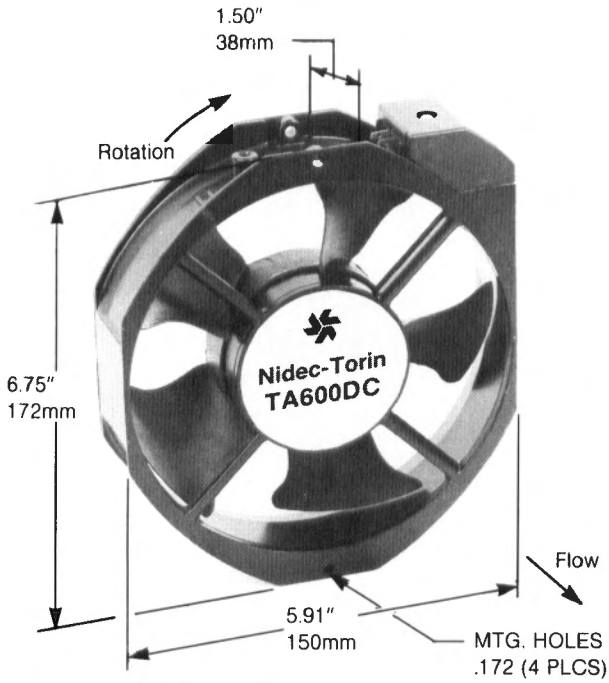

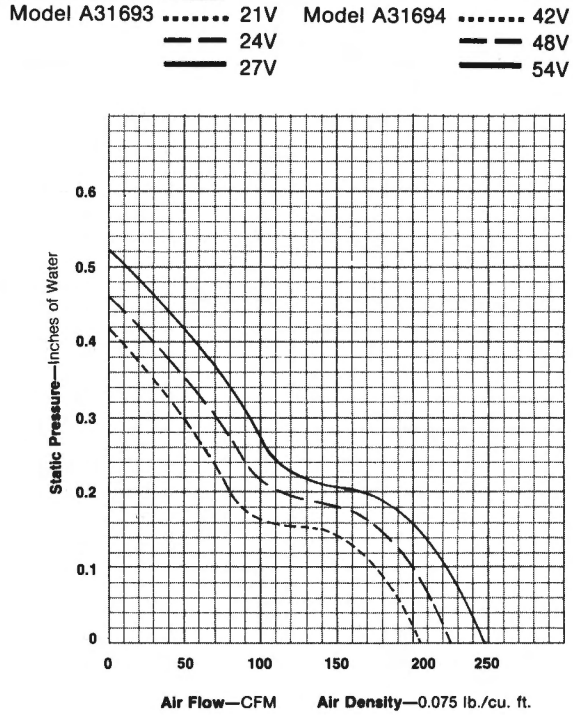

The TA600DC utilizes a high efficiency, electronic commutated brushless DC motor design. It fits in the standard 6.0 inch frame size delivering the same performance as similar AC fans and permits variable air delivery by adjusting the input voltage. It can be applied in products where stand-by cooling is required during AC power failure. Our brushless DC fan eliminates the need for agency approvals, consumes considerably less power, and reduces EMI and RFI emissions found in AC products. It is polarity protected. The electronic sensing Hall effect signal can be tapped to a control circuit to adjust performance for varying thermal needs and tailor air and sound in stand-by modes. This one product provides an opportunity to standardize and deal with the needs of worldwide fan applications.

It can be adapted to most computer or electronic business machines where DC power is available including computer peripherals, communication systems, portable instruments, and other electronic devices.

Models

Model No.	Voltage	AMPS	Watts	RPM	CFM*	NPEL
A31693	24	.72	18	2900	225	6.4
A31694	48	.39	19	2900	225	6.4

FOR OTHER VOLTAGES CONSULT FACTORY

*CFM rated at zero Static Pressure

Elements

Housing: One-piece die casting which provides structural integrity and acts as a heat sink in dissipating heat from the motor. Finish is plain or black paint.

Impeller: One piece injected molded black thermoplastic, rated UL94V-O. This material has been selected for its low flammability and superior mechanical properties.

Motor: Brushless DC incorporates a permanent magnet rotor and elelctronically commutated stator with Hall Effect sensors.

Connections: Available with color-coded 12 inch (305mm) leads or with spade-pin terminals.

Operating conditions: The recommended operating temperature range is -20°C to +60°C.

Life expectancy: Designed with precision, permanently lubricated ball bearings for long maintenance-free life. Actual life in any given case will depend upon operating conditions.

Weight: 2.2 pounds (1.0kg)

Nidec-Torin Corporation Franklin Drive • Torrington, CT 06790 • (203) 482-4422 • Telex: 643963

United States: Torrington, Connecticut
Japan: Kyoto