D. & VERELL ASSOCIATES
WELLINGTON
REC. 17 JUL 1985
ANSD.....

PAMOTOR

Engineered like
no other cooling devices
in the world.

Table of Contents

Introduction 1
Design Characteristics 2
Performance Evaluation 3
General Information 4

Selecting the Correct Fan 5
Chapter 1. Determining the Airflow & Pressure Requirements 6
Chapter 2. Satisfying the Mechanical & Structural Requirements 10
Chapter 3. Selecting for Acceptable Noise Levels 13
Chapter 4. Selecting for Minimum Magnetic-Field Interaction 17
Chapter 5. Evaluating the Performance of the Complete Cooling System 20
Chapter 6. Ensuring Optimum Reliability in the Complete Cooling System 24

Solid State, Brushless, DC Fans and Blowers 27
Quick Selection Guide 29
Model 812 2-1/2" 12 VDC Axial Fan 30
Model 814 2-1/2" 24 VDC Axial Fan 32
Model 3124F 3-5/8" All Metal 24 VDC Axial Fan 34
Model 4105GX 4-11/16" 5 VDC Axial Fan 36
Model 4112X 4-11/16" All Metal 12 VDC Axial Fan 38
Model 4112GX 4-11/16" 12 VDC Axial Fan 40
Model 4112KX 4-11/16" 12 VDC Axial Fan 42
Model 4124F 4-11/16" All Metal 24 VDC Axial Fan 44
Model 4124X 4-11/16" All Metal 24 VDC Axial Fan 46
Model 4124GX 4-11/16" 24 VDC Axial Fan 48
Model 4124KX 4-11/16" 24 VDC Axial Fan 50
Model 4148X 4-11/16" All Metal 48 VDC Axial Fan 52
Model 6124 6-3/4" 24 VDC Axial Fan 54
Model 6148 6-3/4" 48 VDC Axial Fan 56
Model 8105G 3-1/8" All Metal 5 VDC Axial Fan 58
Model 8112 3-1/8" All Metal 12 VDC Axial Fan 60
Model 8112G 3-1/8" All Metal 12 VDC Axial Fan 62
Model 8112K 3-1/8" All Metal 12 VDC Axial Fan 64
Model 8124 3-1/8" All Metal 24 VDC Axial Fan 66
Model 8124G 3-1/8" All Metal 24 VDC Axial Fan 68
Model 8124K 3-1/8" All Metal 24 VDC Axial Fan 70
Model 8148 3-1/8" All Metal 48 VDC Axial Fan 72
Model RL90-18/24 4-3/4" 24 VDC Radial Blower 74

AC Fans and Blowers 77
Quick Selection Guide 79
Model 900 3-1/8" Sub-Miniature Induction Fan 80
Model 950 3-1/8" Hysteresis Synchronous Permanent Split Capacitor Axial Fan 82
Model 970T Hysteresis Synchronous Permanent Split Capacitor Axial Fan 84
Model 971TR Permanent Split Capacitor Axial Fan 86
Model 2500S 4-11/16" All Metal Shaded-Pole Axial Fan 88
Model 2550S 4-11/16" All Metal Shaded-Pole Axial Fan 90
Model 4600X 4-11/16" All Metal Shaded-Pole Axial Fan 92
Model 4600XP 4-11/16" All Metal Shaded-Pole Axial Fan 94
Model 4606X 4-11/16" All Metal Shaded-Pole Axial Fan 96
Model 4650X 4-11/16" All Metal Shaded-Pole Axial Fan 98
Model 4656X 4-11/16" All Metal Shaded-Pole Axial Fan 100
Model 4800X 4-11/16" All Metal Shaded-Pole Axial Fan 102
Model 4850X 4-11/16" All Metal Shaded-Pole Axial Fan 104
Model 6008S 6-3/4" Permanent Split Capacitor Axial Fan 106
Model 6058S 6-3/4" Permanent Split Capacitor Axial Fan 108
Model 7600S 6" Dia. All Metal Shaded-Pole Axial Fan 110
Model 7606 6" Dia. All Metal Shaded-Pole Axial Fan 112
Model 7650S 6" Dia. All Metal Shaded-Pole Axial Fan 114
Model 7656 6" Dia. All Metal Shaded-Pole Axial Fan 116
Model 8500D 3-1/8" All Metal Shaded-Pole Axial Fan 118
Model 8500DP 3-1/8" All Metal Shaded-Pole Axial Fan 120
Model 8506D 3-1/8" All Metal Shaded-Pole Axial Fan 122
Model 8550D 3-1/8" All Metal Shaded-Pole Axial Fan 124
Model 8556D 3-1/8" All Metal Shaded-Pole Axial Fan 126
Model 8800D 3-1/8" All Metal Shaded-Pole Axial Fan 128
Model 8850D 3-1/8" All Metal Shaded-Pole Axial Fan 130
Model RL90-18/00 4-3/4" Radial Blower 132

Cross Reference Directory 134
Mounting Dimensions 136
Fan Accessories Guide 139
Fan Accessories 140
Distributors 142
Representatives 146

Introduction

This catalog has been prepared to give the design engineer applications and performance data to help him make an intelligent selection of the right fan for the job.

WHY CHOOSE PAMOTOR?

PAMOTOR offers a wide selection of cooling devices, each designed to give you maximum performance. As a result of many years of engineering excellence, PAMOTOR fans have earned a reputation for reliability, high quality and low-noise operation. The PAMOTOR design has been awarded numerous patents, which, when combined with its rugged construction, is ounce-for-ounce the best investment for your cooling dollar. PAMOTOR fans are designed to outlast the equipment they cool.

TYPICALLY, PAMOTOR FANS HAVE:

- All-metal construction for greater durability and heat dissipation.
- Aerodynamically designed fan housings/venturies for maximum air intake with minimum air turbulence and noise.
- Computer-designed pitch, shape and number of impeller blades.
- Impulse-welded steel impeller blades for greater strength and reduced noise levels on most models.
- A patented "inside-out" motor configuration that delivers greater torque and power at reduced operating temperature.
- Reduced electromagnetic radiation.
- A maintenance-free, hand-fitted bearing system of broached sintered iron or high temperature ball bearings.
- Rotors that are dynamically balanced to a maximum shift of the center of gravity of .0001-inch in each end plane as shown in Figure 1.
- Special moisture resistant finish prevents corrosion or deterioration under humid atmospheric conditions or in extreme temperature variations.

Equally important, PAMOTOR fans are manufactured to a high quality of workmanship and performance consistent with rigorous quality control standards. PAMOTOR on the label is your assurance of long, dependable, maintenance-free operation.

PAMOTOR WARRANTY

All PAMOTOR fans are warranted to be free of defects in materials and workmanship for a period of one year. The PAMOTOR PENTAFLOW™ premium grade series are warranted for five years.

PAMOTOR cooling devices are engineered and manufactured to meet or exceed existing U.S. and international safety standards. It is the only fan line that meets IEC requirements, is UL recognized, CSA certified and VDE approved essentially across the board.

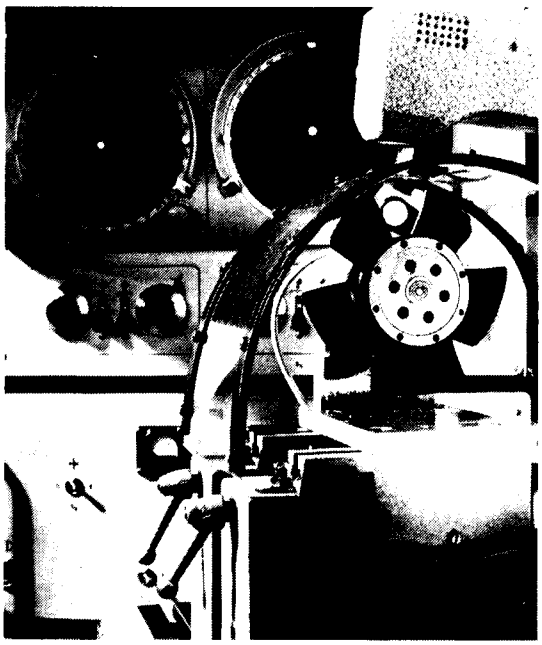

Figure 1

Design Characteristics

OPTIMIZED FOR PERFORMANCE

Housing and venturies of all PAMOTOR fans are aerodynamically designed for maximum airflow with minimum air turbulence, resulting in more efficient airstream characteristics and reduced noise levels.

REDUCED NOISE LEVELS

Low noise is achieved through the design of the impeller blades and by virtue of superior rotor balance. Vibrations that can upset mechanical adjustments and electrical connections are effectively damped.

With PAMOTOR fans, noise is neither an acoustical nuisance nor a cause of equipment malfunction, and a quiet fan is more efficient and less likely to fail.

AC FANS

PAMOTOR's patented "inside-out" motor configuration (the housing rotates around the stator), used in both shaded-pole and induction type fans provides higher torque with reduced internal heat rise, resulting in lower operating temperature. Cooler temperature is also the result of an effective lubrication system, the exceptionally high thermal conductivity of the protective synthetic varnish, and the mechanical precision of the unit assembly.

Electromagnetic radiation is reduced by the self-shielding, "inside-out" motor. Its field orientation pattern is the least likely to penetrate into the equipment to be cooled; hence it is less likely to couple into sensitive electronic circuitry.

Fan windings are normally VDE Class E, rated at 120°C. In the higher temperature fans, ratings are VDE Class F, rated at 155°C.

TYPICAL APPLICATIONS

PAMOTOR AC fans are ideal for

- EDP Systems and Peripheral Equipment
- Electronic Test Equipment
- Medical Equipment
- Broadcast Equipment
- High-Power Lamps
- Color Processing Equipment
- Emergency Generators
- Color TV/Hi-Fi Amplifiers
- Electrical Controls
- Telephone Equipment
- Vending Machines
- Airborne Equipment
- Communications Systems

DC FANS

The PAMOTOR line of brushless DC cooling fans offers the design engineer many options not available in AC fans. Obviously, brushless DC fans are a natural in DC systems with no AC readily available. In addition, however, many applications previously served by AC fans are being converted to brushless DC. Here are some of the reasons why:

WORLDWIDE USAGE — by operating a brushless DC fan on the internal DC power supply, no provision need be made to change the fan's electrical connections when the unit is switched from 115 VAC to 230 VAC. Also, no change in fan performance will occur if the unit is operated at various frequencies (50 Hz, 60 HZ, 400 Hz, etc.). Since one DC fan model can perform in so many different electrical environments, a very limited number of fan models can satisfy the cooling requirements of a broad product line.

TAILORED PERFORMANCE — by varying the applied DC voltage to the fan, the airflow can be optimized. Thus, the least amount of noise will be generated while still satisfying the cooling requirement of the equipment.

SPEED CONTROL — within the permissible voltage range for each particular DC fan, the voltage may be varied by means of a circuit containing a thermistor. As the temperature of the system rises, the applied DC voltage goes up and the airflow increases. The benefit is that noise is minimized at lower ambients while cooling capability still exists for higher ambients.

SAFETY — due to their low operating voltage, brushless DC fans are ideal for applications like medical equipment, where higher voltages could present a safety hazard.

TYPICAL APPLICATIONS

PAMOTOR DC fans are exceptionally well-suited for use in

- Mobile Radio Equipment
- Medical Electronics
- EDP Equipment and Peripherals
- Shipboard Computers
- Airborne Applications
- Communications Systems
- Automotive Applications
- Marine Use
- Telecommunications

whenever DC voltage is normally available. They also find wide acceptance for use in power stand-by modes as a safety feature.

Performance Evaluation

BEARING/LUBRICATION SYSTEMS

The bearing/lubrication systems are a major factor in optimizing the performance of PAMOTOR fans. Their exclusive features include: over-sized hand-fitted, broached dual-sleeve bearings of sintered iron, impregnated with high performance lubricants. The lubricants are control-administered through capillary action from a large oil felt reservoir between the sleeve bearings. Precision ball bearing systems are available for critical, high temperature applications.

Fan axial play is controlled by a thrust bearing, resting against a plastic pad on one side and a hardened steel collar on the other.

Basic bearing systems are shown in Figure 2.

AIRFLOW DATA

The test data and curves shown in this catalog were obtained by methods outlined below, and were conducted in accordance with procedures comparable to AMCA standards.

TUBE METHOD

In the tube method static pressure is measured perpendicularly to airflow direction. Output is measured by the pressure difference on each side of the diaphragm. Curves are precisely determined by manometer readings for different back pressure.

An auxiliary blower is used to overcome the internal pressure losses caused by air turbulence and friction. The tube measurement method is used when the fan will operate in a pure axial-flow environment, such as air ducts, vents, etc.

CHAMBER METHOD

When the fan is to be used to cool large volume enclosures, the double chamber method, illustrated in Figure 3, will yield more realistic test results than the tube method. In this configuration, the increase in static pressure between the fan opening and the test chamber is determined. Air volume output is obtained by measuring the pressure decrease in the airstream.

The air turbulence caused by measurement of the fan's static pressure has no influence on the test results because the chamber is large enough to calm the available air. As this test method closely duplicates actual application conditions, realistic performance curves and test data may be obtained whenever required.

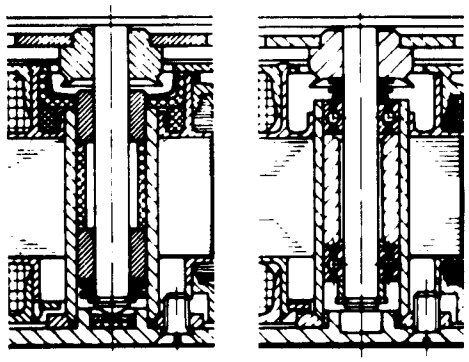

Sleeve Broached Sintered Iron with Thrust Bearing | **Ball Bearing**

Figure 2

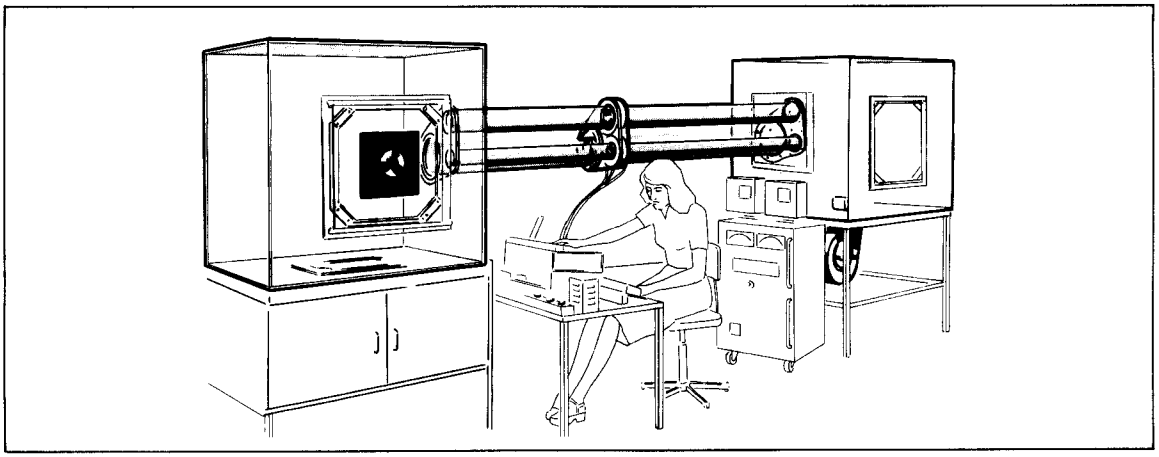

Figure 3

NOISE MEASUREMENT

As illustrated in Figure 4, fans are suspended by large rubber bands in an anechoic chamber. A microphone is placed 40-inches from the operating fan and measurement is made with a BRUEL and KJAER Tierce-Octave Analyzer, Model 2112.

Noise performance characteristics are available for each PAMOTOR fan.

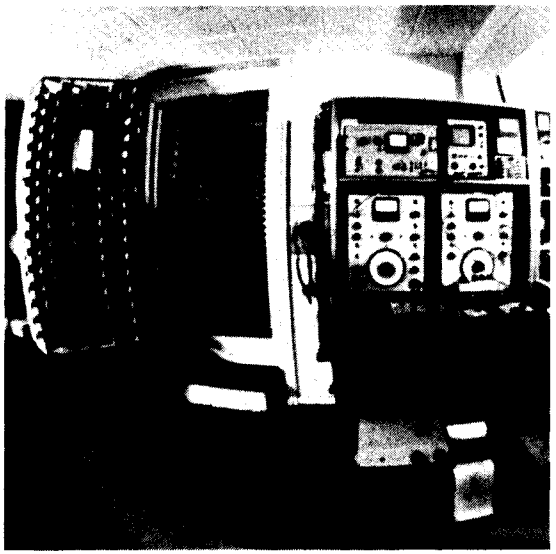

Figure 4

QUALITY CONTROL

PAMOTOR fans are manufactured by PAPST-MOTOREN KG in West Germany. Founded in 1937, PAPST-MOTOREN KG has become known throughout the world for its high quality, high reliability motors. Precise mass production techniques, automated machinery and skilled master technicians have enabled PAMOTOR fans to be competitive without sacrifice in quality. Machining tolerances are held to .00004-inch.

To maintain this high degree of precision, 60% of PAPST-MOTOREN KG's employees are skilled technicians. Utilizing the very latest in manufacturing and test equipment, PAPST-MOTOREN KG has maintained the highest standards of quality control in every production stage. PAPST-MOTOREN KG also continually performs market research analysis to determine and meet industry requirements. In most cases, PAMOTOR fans exceed the specifications of the accepted standards at large.

Prior to shipment, a Quality Control Engineer inspects PAMOTOR fans to AQL, per MIL-STD-105, to ensure that they meet or exceed the rigid standards of quality synonymous with the PAMOTOR name.

APPLICATION ENGINEERING

For application-engineering consultation on special air-cooling system requirements, PAMOTOR applications engineers and field engineers are always available, without cost or oblication. Phone, wire or write your local PAMOTOR representative, or communicate directly with our Application Engineering Department, for prompt engineering assistance.

General Information

PRODUCT DELIVERY — normally from stock within a 24 hour period, if necessary.

WARRANTY REPLACEMENT — suspect material properly returned to PAMOTOR will be evaluated to verify the fault. If the problem is verified and falls within the bounds of our warranty, a new fan or accessory will replace faulty item. No material may be returned for credit only.

RETURN AUTHORIZATION NUMBER — prior to returning any material to PAMOTOR for any reason, a return authorization number must be issued. This number will be issued promptly by contacting your PAMOTOR sales representative (see pages 132 and 133).

SPECIFICATIONS — PAMOTOR reserves the right to change specifications as required to permit improvements in the design of its products.

SELECTING THE CORRECT FAN

Engineered like no other cooling devices in the world.

CHAPTER 1

Determining the Airflow and Pressure Requirements

BECAUSE this booklet is intended primarily for engineers and designers in the electrical and electronics fields, we shall begin by suggesting two electrical analogs of the cooling system.

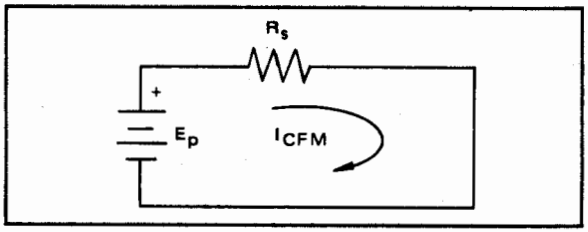

Figure 1. Electrical analog of pressure/flow relationship in a linear system.

E_p ≡ pressure head developed by fan, in equivalent inches of water-column height.

I_{CFM} ≡ ratio of air flow through the system, in cubic feet per minute (CFM) of air at incoming temperature.

R_s ≡ resistance to air flow (assumed constant) of the system, in inches/CFM.

$E_p = I_{CFM} \cdot R_s$ (as in Ohm's Law). (eq. 1)

The first analog, shown in figure 1, assumes that the flow-resistance (R_s) of the entire system is constant (i.e., that the system is linear) . . . but that assumption can only yield approximate results, beacuse air is an expandable medium, and flow resistance is actually a complex non-linear function of flow rate, for all but the simplest and most geometrically "regular" of structures.

Furthermore, the flow resistance of a system is actually the sum of several resistances in series (e.g., the chamber, the filter, the fan itself, the exit and entry ports, etc., as shown in Figure 2), and each of

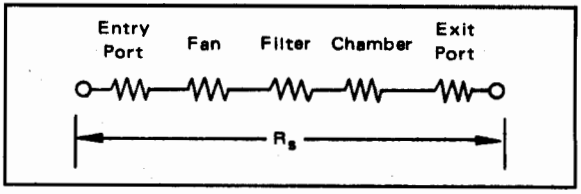

Figure 2.

them varies with flow rate in a different manner. Finally, this analog assumes that the character of the flow-lines does not change significantly over the range of air-flows to be considered – that the laminar-flow regions remain laminar, and the turbulent-flow regions remain turbulent, and that the extent of each region remains approximately constant.

Quite clearly, this "Ohm's Law of Air Flow" concept is a poor model of the actual situation in a practical system. Nevertheless, it will prove to be practical for estimating the effect of small variations in pressure or air flow, around a point that has been verified independently – and that is all we need it for.

The second analog that we shall consider is a much more accurate model of the behavior it attempts to represent. It relates the allowable temperature rise (of the cooling air) to the airflow.

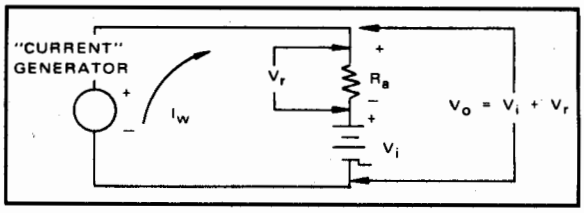

Figure 3. Electrical analog of temperature/flow relationship in a linear system.

I_w ≡ power transferred by the dissipating equipment into the airstream (Watts).

V_i ≡ temperature of incoming air (° C).

V_o ≡ temperature of outgoing air (° C).

V_r ≡ temperature rise of airstream (° C).

R_a ≡ thermal resistance of airstream at a particular flow rate (CFM) and for a particular heat-transfer geometry; assumed constant (° C/Watt).

$V_r = I_w \cdot R_a$ (as in Ohm's-Law). (eq. 2)

This second analog, shown in figure 3, is based on certain assumptions, as was figure 1; but this second set of assumptions is neither as restrictive nor as difficult to justify as were the first.

Briefly, they are:

- that the thermal capacity of the air stream remains constant, regardless of temperature (approximately true over moderate temperature ranges).
- that the rate of heat transfer from the dissipating elements of the system to the airstream remains constant regardless of temperature, for a given incoming airflow (very nearly true for all conventional temperature ranges and airflow patterns).
- that we are justified in averaging the temperature of the various parts of the airstream — i.e., assuming "good mixing" . . . and this is not a dangerous assumption, if the system is reasonably well designed, without "pockets" or "starved areas" (this subject is discussed in more detail in a later chapter).

One more equation is needed to equip us to apply the second analog: the one that relates the thermal resistance of the air stream to the magnitude of the airflow in CFM.

$$R_a = \frac{1.76}{CFM} \text{ (° C/Watt)} \qquad \text{(eq. 3)}$$

Substituting equation 3 in equation 2, we get:

$$V_r = \frac{1.76\, I_W}{CFM} \text{ (° C)} \qquad \text{(eq. 4)}$$

. . . or, to put equation 4 in words:

$$\text{Temperature rise in ° C} = \frac{1.76 \text{ (Watts transferred)}}{\text{airflow in CFM}}$$

This relationship is depicted graphically in figure 4.

Now let us apply equations 4 and 1 to a practical example:

> An enclosure contains electronic equipment capable of dissipating 190 Watts, worst-case. It is desired to maintain the temperature of the outgoing air at no higher that 55° C. The highest input (ambient) air temperature will be 40° C. The resistance to airflow of the cabinet is estimated at 0.015 inches/CFM.

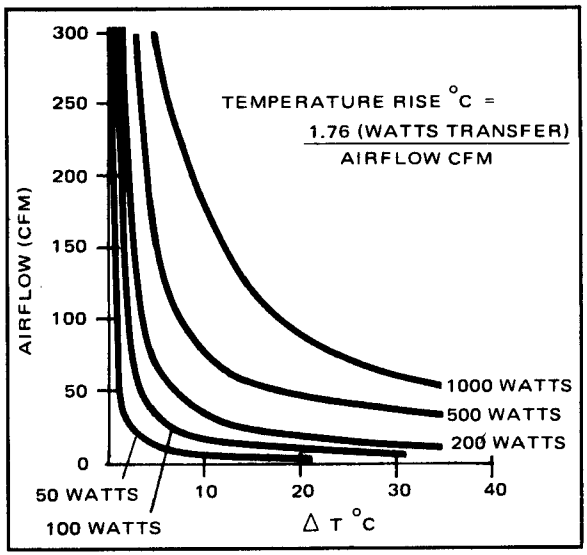

Figure 4. Airflow vs Temperature Rise for Various Power-Transfer Levels.

Step 1: Calculate the required CFM, from equation 4.
From the data, we get:

$$V_r = V_o - V_i = 55 - 40 = 15° \text{ C}$$
$$I_W = 190 \text{ Watts}$$

Substituting these into equation 4, we get

$$15 = \frac{1.76 \times (190)}{CFM}$$

Step 2: Calculate the pressure drop at which the fan must deliver that minimum CFM.
From the data and Step 1, we get:

$$R_s = 0.015 \text{ inches/CFM}$$
$$I_{CFM} = 22.3 \text{ CFM}$$

Substituting these into equation 1, we get

$$E_p = 22.3 \times 0.015 = 0.335 \text{ inches}$$

Thus, we see that we need a fan capable of delivering 22.3 CFM against a pressure "head" of 0.335 inches of water . . . assuming, among other things, that the estimated resistance to airflow (0.015 inches/CFM) was reasonable.

The next thing to do is to consult fan manufacturers' pressure/flowrate curves for fans that will fit the enclosure and fit your ideas of satisfactory design (e.g., in terms of noise level, structural strength, etc.). Here we show several such curves:

Performance Curves

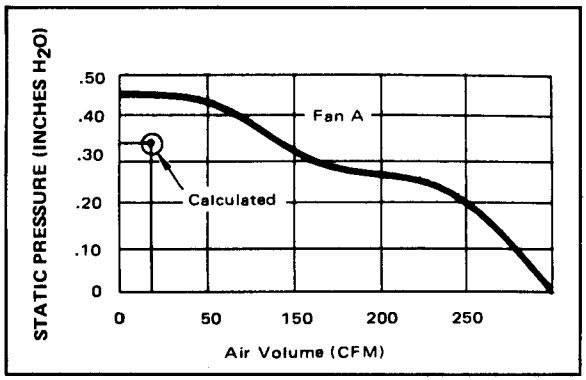

Figure 5.

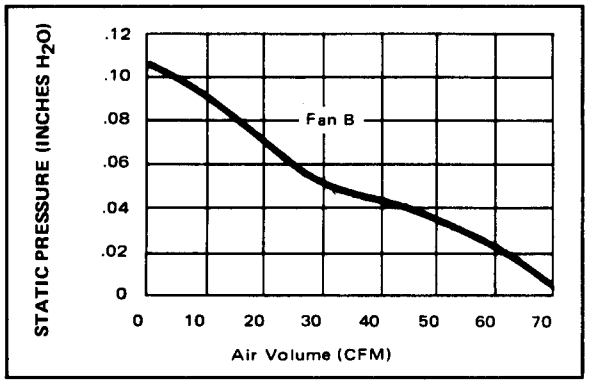

Figure 6.

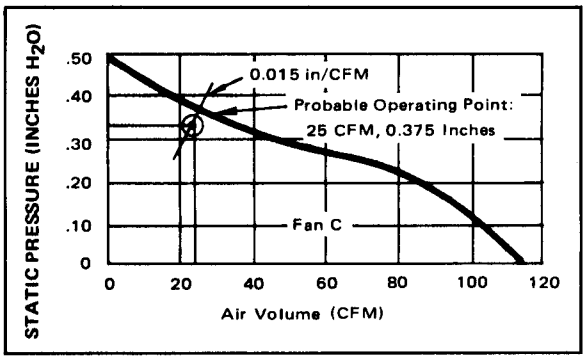

Figure 7.

Fan A will certainly do the job — but it is a large, powerful, relatively expensive device, much more fan than you need, for this application.

Fan B will not do the job. It's just not capable of overcoming the pressure drop, at any volume. (To put it differently, Fan B would deliver about 6.7 CFM, at 0.10 inches pressure, in this application.)

Fan C is just right. It has a reasonable margin of safety at 22.3 CFM, for this enclosure. The probable operating point (obtained by drawing a line through the calculated operating point of 22.3/0.335, with a slope of 0.015 inches/CFM) appears to be about 25 CFM and 0.375 inches. Fan C is small, quiet, relatively modest in price. It will not overpower the system, so as to encourage excessive dust infiltration or airborne contamination, and it will not create an uncecessary noise problem.

So much for our first example. Now let's get down to the practical difficulties you must be prepared to face — just to get this far in selecting the optimum fan for your application.

Getting Practical

First of all, determining (or at least estimating) the resistance to airflow is the greatest practical difficulty you face. It's easy enough to say "test the system over a range of airflows," but usually you cannot do that conveniently . . . especially when the fan is being specified. Furthermore, there is no one value of resistance to air flow, as we have already noted. The curve of pressure drop vs. flow rate for a typical complex enclosure is shown in figure 8, below.

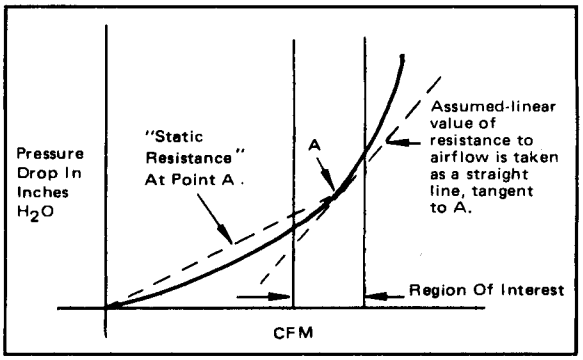

Figure 8. Experimentally determined pressure/flow curve.

Note that, while it is practical to approximate this characteristic by a straight line over a short distance, the slope of that line bears no meaningful relationship to the "static" pressure line drawn through the origin and the center of the "region of interest." What's to be done?

Here's one approach – essentially a rule of thumb, but a good way to estimate the pressure drop in many common enclosures. The graph of figure 9 shows very approximate values of pressure drops vs. CFM for a variety of common structures. Pick the one closest to your application. Estimate its pressure-drop for the CFM of flow you need. Then use the following "rules" to scale up or down from that figure:

- For a given volumetric flow (CFM), the pressure drop through a given structure varies **inversely as the square of the cross-sectional area** perpendicular to the direction of flow. Thus, if we show a cross-section of 2 sq. ft., and you have the same configuration with a cross section of 4 sq. ft., the pressure drop for any given flow would be only 25% of the pressure drop shown on our graph.
- For a given flow, the pressure drop varies **directly as the length**; except that, if the path becomes very short, the fixed entry/exit drops become significant.
- For a given structure, the pressure drop varies directly as **the square of the flow,** unless the flow falls outside the ranges given by our curves.
- In approximating the effect of differences between our "idealized" geometry and the actual configuration, remember that small differences near the entry or exit ports create larger errors than differences in mid-path, where the velocity is usually lower.

Another practical problem is presented by the extreme requirements – either unusually high pressure at low CFM, or unusually high CFM at low pressure. The high pressure case may often be solved by putting fans in series – one at the entrance port, pulling in, and one at the exit port, pushing out, thus doubling the pressure capability. The high volume case may often be solved by putting fans in parallel, with two or more located either at the entrance or the exit.

Perhaps the most challenging practical problem is not developing enough flow, but providing enough heat exchange. If you read the early part of this discussion again, you will see that we were careful to relate temperature rise to the power actually transferred to the air. Heat transfer by convection (radiation is generally trivial) depends upon the nature of the contact between the surface to be cooled and the cooling medium, upon the area of that surface, and the velocity of the airflow. You may need to use fins, deflecting vanes, and even constricting pipes, to direct blasts of high-velocity air over the heat-exchange surfaces. Remember, all calculations in this and any other text on this subject assume that you have successfully transferred the heat. Remember also that every vane or fin that you introduce into the air stream means more pressure drop.

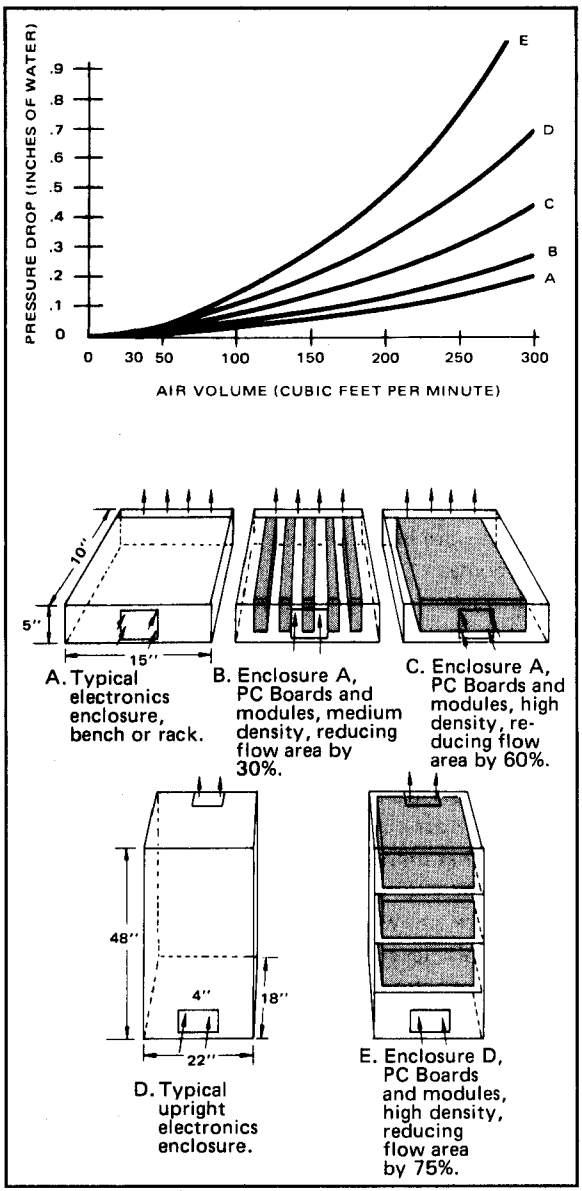

Figure 9.

We shall return to this subject in a later chapter, in which we examine the entire system as a heat-transfer machine.

CHAPTER 2

Satisfying the Mechanical and Structural Requirements

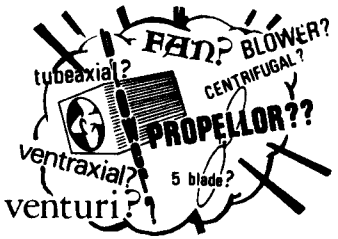

Figure 1. Leave these to the fan designer. They are of genuine concern to him – because he has to meet your needs at a tolerable price and size. Which way he does it is not significant.

THERE has probably been more misleading nonsense written about the relative merits of various types of fans and blowers for various applications, than about any other factor in cooling-system design. Here are a few clarifying facts:

1. Except in those very rare applications in which one must allow for **great variations** in the equivalent airflow resistance, or in the viscosity and density of the air, **it makes absolutely no difference what type of air-moving device is used . . .** just so long as it can **produce the required CFM against the pressure drop** (in inches of water) that it must overcome.
2. Below about one horsepower, there is **no consistent and useful relationship** between the **type** of air-moving device and its cost, efficiency, or capacity. Since almost all of the fans (and most blowers) used for cooling electronic equipment, data-processing devices, business machines, and industrial process controls or instrumentation are in the 10-200 Watt class (less than 1/3 HP), the only things that matter are:
   - flow-rate vs. pressure drop
   - size and weight
   - noise levels
   - magnetic interference
   - toughness and dependability
   - cost – to buy and to use
3. Too much airflow may be almost as bad as not enough – because excessive air flow means that a greater volume of dust, dirt, and other airborne contaminants are circulated through the enclosure . . . filter or no filter, since no ordinary filter is better than 80% to 90% efficient at reasonable pressure drops. This means that, at double the airflow, switch-contact and exposed relay-contact life (between cleanings or replacements) will be cut by 50%, cleaning of high-voltage and low-leakage paths must be done twice as often, etc., etc. And finally, too much airflow means that the fan is too big, too powerful, and therefore probably more expensive than it should be.
4. Generally speaking, the cost of a fan of any given type (design family) varies more with its **physical size** than any other characteristic! Remember – we said "generally speaking." There are exceptions. In figure 2, we show the relative prices for a certain family of square-frame, tube-axial fans.

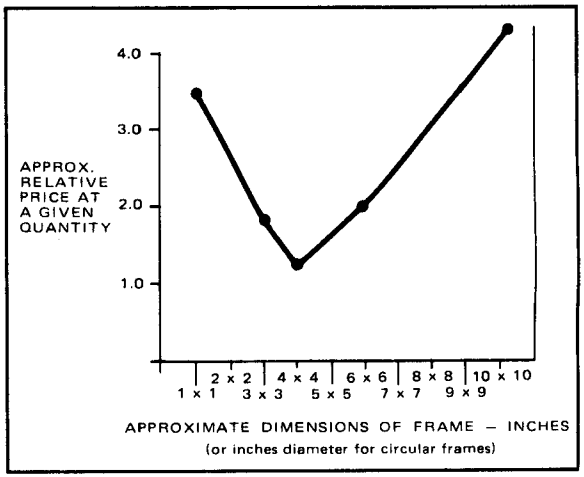

Figure 2

In a given design family, size is a critical cost factor. Very small and very large dimensions tend to be 3 to 4 times as expensive as the 3" - 6" sizes, and 4" seems to be the most economical size. This is true of many leading manufacturers, regardless of type, efficiency, capacity, etc. . . generally speaking.

The dimensions given are approximate. The significance of the price ratios shown will be evident when we say that this curve **will not vary by more than 15%** when drawn for five different leading manufacturers!

NOW let us turn our attention to the Constraints that must be respected in selecting a fan for a given application:

1. First of all — **it must fit.** You may not always be able to use the lowest-cost, best-performing fan for a given airflow/pressure requirement, simply because it can't be accommodated in the enclosure. In this connection, don't overlook the possibility of mounting the fan on the top or bottom of a short enclosure — as shown in figure 3.

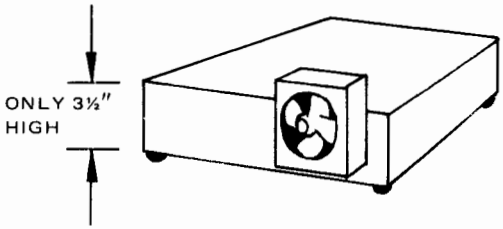

A 4" x 4" fan won't fit on rear panel (above) . . . but will fit as top-exhaust or bottom mounted unit (below) . . . and generally will cost less, while cooling more efficiently.

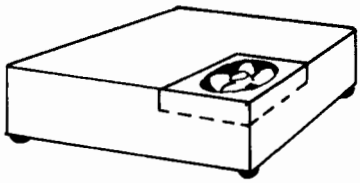

Figure 3. One way out of a common fit problem

2. Second, it must **intrude** as little as possible on the equipment **within** the enclosure . . . but it can't just be "tucked in" anywhere it fits. The **airflow path** should be as direct and "untortured" as possible, and should, of course, route the cooling air past the important heat-exchange points in the equipment. Figures 4 and 5 show what to look for in selecting a fan that will intrude the least and yet create a sensible airflow path.
3. Next, one must consider **safety.** "Fingerguards" are a minimum requirement in most cases, as is approved wiring. The wiring should be made flexible if the fan is mounted on a hinged panel or door. But not all fans are easily equipped with guards, and some require special fixtures to achieve approved wiring. Safety considerations sometimes argue against the most convenient form of fan and/or mounting scheme — and this includes some of the ideas in figures 4 and 5, in some instances.
4. Consider the **strength** of the structure. A 4" diameter knockout in a 5" high rear panel may not be adequately braced by a plastic fan housing. The first good bump it gets in transit, or on the bench, may bend, distort, or crack the panel, the fan, or both. Plastic fans often warp, or creep, and become misaligned. They have even been known to "toss their rotors" — into a stack of circuit cards, at times, with hundreds of dollars worth of damage. An all-metal fan, of high strength, firmly mounted on a metal panel, is the best structural protection against damage and immediate or subsequent failure. (As we shall see later, it's also the quietest, most vibration-free structure for most applications, too.)

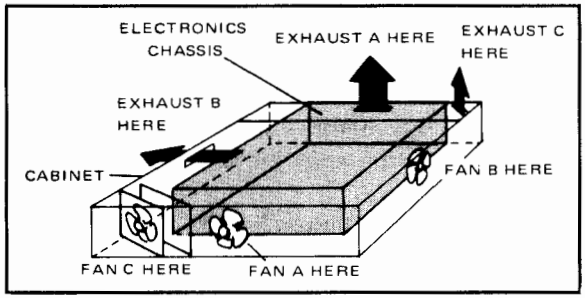

Figure 4.

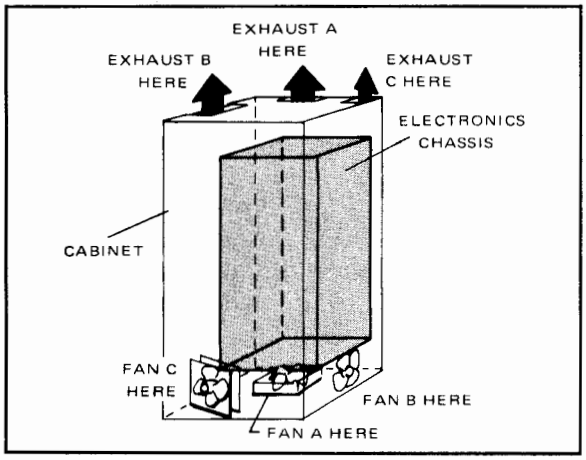

Figure 5.

NOW let's talk about a less straightforward matter — the **velocity of airflow.** For a given CFM, the **average** velocity of air through a structure is constant, regardless of the size, shape, or type of fan that moves the air.

But the **peak** velocity of airflow is another matter. In some fans, the velocity of air leaving the tip of the blades is ten or more times as high as the average velocity. And the larger the fan, the higher the peak velocity. Furthermore, for a given design and size of fan, the higher the rotational speed, the higher the velocity.

Who cares about peak velocity? Your ears care, for one thing. As we shall see in the next chapter in this series, acoustical interference is a very important consideration in fan selection —not just for human comfort and efficiency, either; noise means vibration, and vibration can cause all kinds of trouble in electrical and electronic equipment including some very subtle kinds of failure.

Consequently, except in the regions in which the airflow is being guided past or through heat exchangers, velocity must be kept low . . . as near to the average velocity as possible, in fact.

Therefore, assuming you have a group of "possible" fans to choose from — **choose the one that has:**

- **the smallest-diameter blades (down to 4" — see figure 2)**
- **the slowest motor (lowest RPM)**
- **the most uniform velocity profile***

. . . and that will still deliver the CFM/pressure performance you need.

Figure 6 shows a striking example of the advantages of choosing wisely, for low peak velocity.

EXAMPLE: The cooling requirement is 200 CFM at 0.15" of water column. Two fans are under consideration. Their performance curves are shown below, in figure 6.

FAN A	**FAN B**
10" diameter	6" diameter
1600 RPM @ 60 Hz	3300 RPM @ 60 Hz
Axial design	Axial design

*Almost always, the venturi-ported, impeller fan designs have the most uniform velocity profiles. Propellers are the worst of all.

The prices of the two fans are within about 10% of each other, and both will fit (although the smaller, lighter design, Fan B, is obviously somewhat easier and less expensive to accommodate structurally).

Both fans will do the job — fan "B" having slightly more "margin" of safety — and neither could be considered "overpowered."

But here's the clincher — the noise level (Speech Interference Level) of fan B is almost 10 dB lower **than that of fan A!** This is true despite the lower speed of fan A. Clearly, the 10:6 diameter ratio is more effective in this use in reducing noise than is the 2:1 speed ratio.

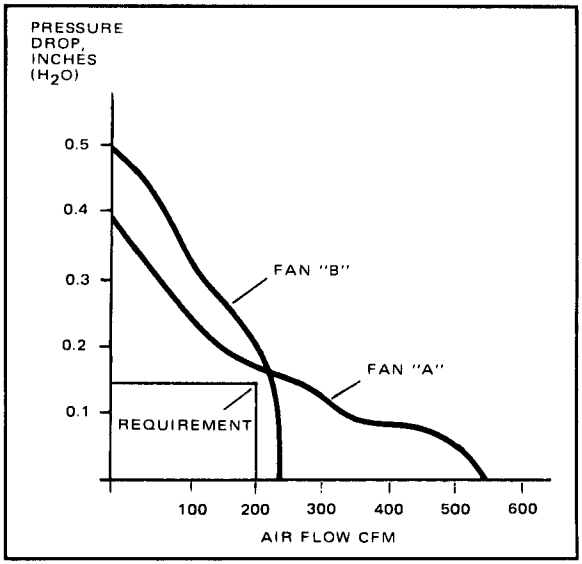

Figure 6. Performance curves of two "possible" fans for example.

In the next chapter we shall examine the question of noise at much greater length.

CHAPTER 3

Selecting for Acceptable Noise Levels

IN OUR FIRST TWO chapters we discussed **Determining the Airflow and Pressure Requirements** and **Satisfying the Mechanical and Structural Requirements.** In this chapter we discuss the third step in optimum fan selection – verifying that the SIL (Speech Interference Level) and the corollary vibration and microphonic effects as well, of the available fans will be acceptable in your application. Because the fan design field is beset by much misunderstanding we propose to begin this discussion with what we hope will be a clarifying fundamental exposition.

Basic Definitions

Sound is an oscillation in pressure, stress, particle velocity, etc., in an elastic or viscous medium; it is also the superposition of such propagated oscillations*. Noise can be defined as any undesired sound.

The **sound pressure level** is defined by

$$\text{SPL (Sound Pressure Level) in decibels (dB)} = 20 \log 10 \frac{P}{0.0002} \qquad \text{(eq. 1)}$$

where

P = the root-mean-square (rms) sound pressure, in microbars (μB), and

$1\ \mu B = 1\ \text{dyne/cm}^2 = 1.45 \times 10^{-5}\ \text{psi}$**

The reason we use the rms value is that most sounds are complex signals, not pure sine waves, and the best way of describing them is in terms of their energy, which is measured by their rms values. The reference value of 0.0002 μB was selected somewhat arbitrarily, because it represents the threshold of hearing, on the average, for human beings, of a 1000 Hz tone. When P=0.0002 μB, then SPL=0 dB. (It is interesting to note that 0 dB is only about 3×10^{-9} psi – how extremely sensitive the human ear is!) The range of sound pressures discernible is quite large – from the hearing threshold level to about 10 million times greater in intensity. The use of a decibel (dB) scale condenses this range to a convenient, workable one – from 0 to about 140.

But there is no such thing as "the" sound level. We must know over what frequency range the acoustic energy has been measured, and how the level at each frequency has been added into the total. The standard methods of doing this are discussed below, and related directly to fan specifications. Fan specifications try to describe, quantitively and qualitatively, how much acoustic noise a fan generates. For example, a typical fan noise specification may read: "Noise Level is 61 dB (A) or 54.7 dB SIL at 117V/60 Hz (See Noise Level Curves)."

When you look at the curves referred to, you find a graph of the kind shown here.

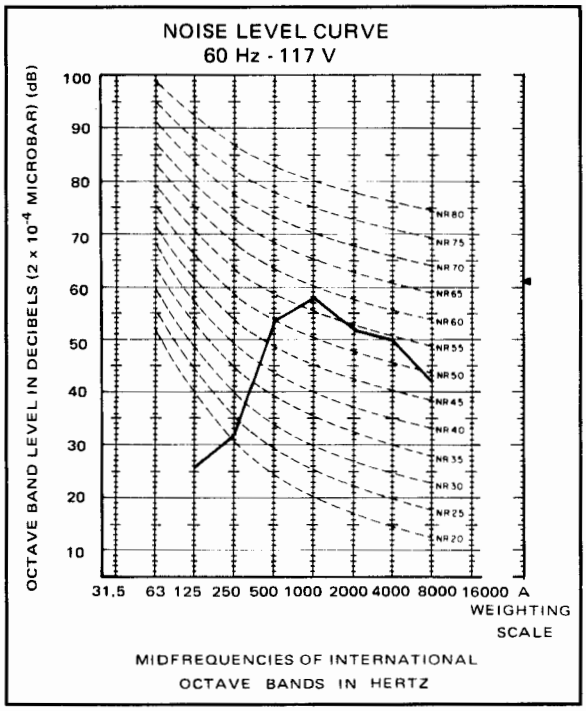

Figure 1. Typical noise-level curve for a fan.

* **Handbook of Transducers for Electronic Measuring Systems,** by Harry N. Norton, Prentice-Hall, Inc., 1969, page 509.

****Measurement Systems,** by Ernest O. Doebelin, McGraw-Hill Book Company, 1966, page 416.

NOW, armed with our basic definitions, let's see what such noise specifications, stated by the dB values and curves of our example,really mean.

The first two things we want to know about noise is how **loud** it is, and what its frequency distribution is. These facts are usually determined by use of a sound-level meter, an instrument consisting of a microphone, an amplifier, "weighting" networks (to be explained later), a calibrated attenuator, and an output-indicating meter. For accurate frequency analysis, the basic circuits and components of the sound-level meter should (ideally) have a uniform or flat response over the audible frequency range from about 20 Hertz to about 20 kilohertz. (The "weighting" networks are used to modify this uniform response in known, meaningful ways.)

One way to find the frequency distribution of the noise is to divide the audible range into ten octave bands, as shown in Table I.

Effective Band Hertz	Center Frequency Hertz
22.1 - 44.2	31.5
44.2 - 88.4	63
88.4 - 177	125
177 - 354	250
354 - 707	500
707 - 1,414	1000
1,414 - 2,828	2000
2.828 - 5,657	4000
5,657 - 11,314	8000
11,314 - 22,628	16000

TABLE I

The nominal frequency range (ratio of high end to low end) of each band is 2 to 1, and the center frequencies increase at a 2 to 1 ratio. Now, if we have the sound-level meter "listen to" a noise source, such as a fan, it can measure the sound pressure level for each octave band. Filters are used to remove or block energy components having frequencies above or below the band being measured. This information can be plotted as shown by the solid line on figure 1. The sound-level meter measured 26 dB for the octave band with 125 Hz center frequency, 32 dB for the next octave band, and so on . . . to 42 dB for the 8000 Hz center frequency band.

Because a curve is a cumbersome way of stating a specification, fan designers felt the need of coming up with a single number to represent the noise intensity that the human ear would hear. A simple average of the seven levels measured would be one way of approximating this value, and this works out to be 44.8 dB for the curve of figure 1. However, sounds or noises at frequencies under 600 Hz do not sound as loud to human ears as equally intense (loud) noises at higher frequencies. The sound-level meter has provision to compensate for this human hearing "prejudice" – with three weighting circuits – A, B, and C – which discriminate against the lower frequencies. To insure uniformity among the different makes of sound-level meters of this kind, the U.S.A. Standards Institute (USASI, formerly The American Standards Association), has established a standard to which all sound-level meters should conform. This standard is shown as the frequency response characteristic of figure 2.

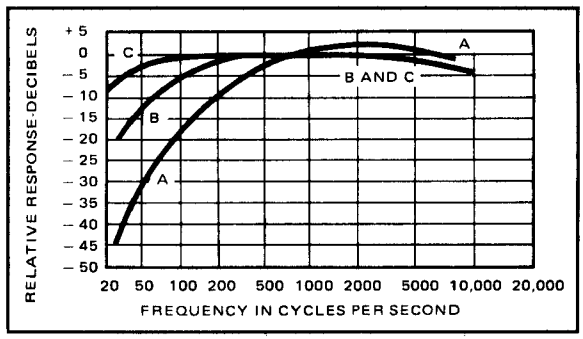

Figure 2. Standard frequency responses for weighting characteristics of sound-level meters.

Any sound or noise measurement should thus be identified as to which weighting was used: "53 dB (A)," or "the A-weighted sound level is 53 dB". Note that the reading is said to be of sound level, not sound pressure level. "Sound-pressure-level" is read only when the sound level meter frequency response is flat (uniform) over the entire audible range, i.e. not weighted at A, B, or C setting to fit the characteristics of the human ear.

A-weighted readings are used quite widely, and many noise-level graphs include an A-weighted scale. An A-weighted scale is included in figure 1 on the right-hand side, and an arrow indicates the reading of the sound-level meter when set at A-weighting – the specified noise of 61 dB (A) given by our specification.

CLEARLY, a noise level may be loud enough to interfere with speech communication. Speech sounds are distributed over the frequency range from about 100 to 10,000 Hz, with most of the intelligence or information in the 200-6000 Hz band. If we measure the noise energy in that region only, we will have some measure of its ability to interfere with speech.

A three-band analysis of the octave bands centered on 500, 1000, and 2000 Hz will permit us to determine the arithmetic average of the sound-pressure levels in these three bands. The resulting numerical average, in decibels, is defined as the Speech Interference Level (SIL). From Figure 1, we can calculate the SIL as follows:

Center Frequency Hertz	Sound-Level dB
500	54
1000	58
2000	52
TOTAL:	164

Three-band Average: 54.7 dB SIL . . . as specified in our example. PAMOTOR uses the more complete seven band average based on those bands with center frequencies of 125, 250, 500, 1000, 2000, 4000, and 8000 Hz.

In referring to figure 1, you have probably noticed the series of parallel dashed-line curves. They are "equal-loudness" curves for the human ear, using as a reference a tone at 1000 Hz. These curves may be used as a basis for rating the effective loudness of a noise. For example, the NR50 curve shows that 54 dB level at 500 Hz is (i.e., sounds) just as loud as a 50 dB (NR50) 1000 Hz tone.

In the sound-level meter, the A-weighted curve characteristic is based on the NR-40 curve . . . in fact, it is the reciprocal of NR-40.

We shall have a few things to say, later on, about the limitations of the SIL rating – especially when it is taken alone, as the sole criterion for judging fan noise output. But for now, let us ask this:

Why Worry About Fan Noise?

First of all, noise is distracting and unpleasant and can adversely affect human performance (and therefore work output) in several ways. It can mask and interfere with speech communications, leading to misinterpretation of spoken orders or loss of information. For example – a softly spoken remark like: "Don't touch that switch until I remove the short across the output," spoken from about 7 feet away, has a sound-level in the neighborhood of 40 dB (A). At the other end of the intensity scale, the average human threshold of sound induced pain is 144 dB sound pressure level. The U.S. Department of Labor regulations establish a limit of 90 dB (A) for 8-hour exposure. (Using rms summing, three really noisy fans in equipment on the same test bench will approach that limit.)

But loss of communication and safety hazard are only two of the problems created by noisy fans. Noise well below the "hazard" level can cause fatigue and errors. Prolonged discussions in an excessively noisy environment can be very tiring, degrading judgement. Studies have shown that the effect of noise on work output depends greatly upon the nature of the work*. The task requiring close attention for a long operation cycle is especially vulnerable to noise, with likely resultant higher rates of operator error and product rejects.

But acoustical annoyance is only a part of the story. The operating environment itself may not be able to tolerate noise – for example, sound studios operating recording equipment, or laboratories containing seismically-sensitive, delicate instrumentation. Remember this – noise is received not only by human ears and conventional microphones. Many things are "microphonic" – many components in a fan-cooled enclosure may function as vibration pick-ups – and many things are fatigued by vibration.

Fan-generated vibration can cause failure of plug-in connectors, especially on printed-circuit boards. There is persuasive evidence that under certain conditions failures in plated-through holes in p.c. boards are actually caused (or made possible) by crystallization of the metal film due to sustained mid-frequency vibration. So, ironically, the fan you installed to ensure cool, reliable operation may actually cause subtle, but not less catastrophic, failure in connectors or printed circuits!

The noise output of a fan transmits **three kinds of energy:**

1. **acoustical,** transmitted directly from the fan through air
2. **acoustical,** transmitted through excitation of the supporting structure

*D.E. Broadbent, **Perception and Communication,** Press: London, 1958.

3. **inaudible vibration,** transmitted through the supporting structure

Vibration is an oscillatory motion in a mechanical system. A fan is a source exhibiting torsional or twisting vibration, and, at rotational speeds of 60 to 120,000 rpm gives corresponding vibrations in the frequency range of 1 or 2 to 2000 Hz.

Fan vibration may come from three sources. First there is the pneumatic pulsation of the frame caused by the pressure variations on each part of it, as the impeller blades go by; second there is some combination of electromagnetostrictive vibration and electromagnetic lamination "buzz"; third there is mechanical dynamic-unbalance vibration produced by the fan rotor in its bearings, and a consequent flexure of the housing and its supports.

NOW – very briefly – how does the fan designer minimize the noise from these sources?

1. **Pneumatic Pulsation.** Blade-angle design and the rotor material are the key to low noise at a given speed. The quietest fans, all other factors being equal, seem to be those that are all metal, including both the housing and the impeller blades.* Metal blades are stiffer than plastic blades, and therefore exhibit less elastic deformation for a given pulsation pressure – and they transmit less vibration, too, because they may be mounted to the structure so as to create a stiffer, higher mass, having less resonance in the audio region.
2. **Electromagnetic and Magnetostrictive Effects.** Low induction levels greatly reduce the noise-energy output of the motor itself. (This may increase the motor drain by a Watt or two out of 20, but it's worth it.)
3. **Unbalanced Vibration.** Near-perfect balancing is the answer to this problem, and all-metal fans are much more stable after balancing – they won't creep, warp, or otherwise distort with age . . . so they stay balanced. Given a low vibration level, the rigidity of the housing structure is the key to avoiding resonance and transmission of the vibration. Again, all-metal fans are inherently stiffer than plastic fans, and permit effective structural "loading" of the vibration source, to reduce the energy transmission.

*If you doubt this compare nylon guitar strings to metal strings . . . or a nylon-string tennis racket to a steel-string racket of the same gauge.

But it is time to leave the designer's problems and solutions, and return to the application sphere. We promised earlier to comment on the significance of SIL ratings.

If speech interference is the only noise effect you worry about, then SIL ratings are not only useful, but conclusive.

If you worry about fatigue, errors, distractions, safety, or morale, then you ought to use the A-weighted reading and the peak octave reading (highest point on the curve of figure 1), and you should consider the possibility of sympathetic resonances in surrounding structures.

If you worry about reliability of the equipment in which the fan is mounted, or about poor signal/noise ratios due to microphonics, then you ought to study both the rigidity of the housing structure and the low-frequency noise output levels.

Finally, whatever criteria you have combined in order to select a quiet enough fan, remember that fans are normally tested in an isolated condition, not rigidly mounted to the enclosure. Without going through all the implications of this test technique, we shall simply call your attention to the fact that a fan can always be made quieter by mounting it properly on a structure that loads the acoustical and vibration sources. **If the fan is all-metal, rigid, and capable of broad-area contact with its supporting panel, then the improvement can be significant – if it is plastic, resilient, and edge-mounted (e.g., by a snap-in bracket), the improvement will be minimal.**

In short, all-metal fans are almost always quieter (than plastic designs of equivalent performance) to begin with, **and they can be made even less of a noise problem by intelligent mounting – an improvement not nearly as attainable with plastic designs.**

CHAPTER 4

Selecting for Minimum Magnetic-Field Interaction

IN THIS FOURTH CHAPTER, we shall extend the procedure of selecting the optimum fan for your application to the question of the magnetic field radiation of the fan. This step in the design sequence involves verifying that the magnetic field radiation of the fan will be tolerably low, or that the field orientation is benign, for your application.

Because any magnetic device, such as a power transformer or a fan-drive motor, has an external magnetic field, we must consider the effects of the fan motor's magnetic field radiation on circuit components, modules, cabling, and on other circuits and circuit elements in the enclosure . . . and perhaps outside of it, too. Magnetic interference can appear, for example, on the display of a cathode-ray oscilloscope, causing at least two undesirable effects. First, it can interfere directly with the CRT-user's interpretation of test signals displayed; and second, it can cause the operator to fret over the question: Is what I see caused by the circuit under test, by the test equipment, or by something else? See figure 1.

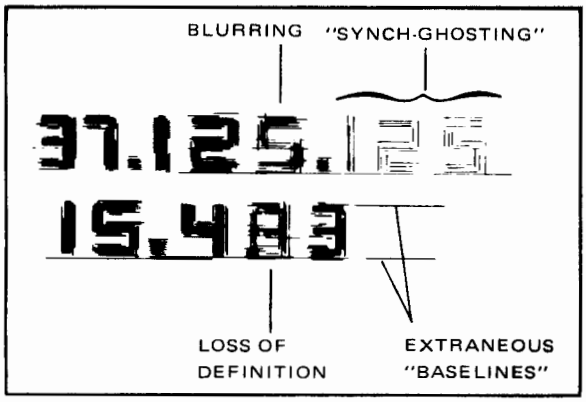

Figure 1. Display of CRT with Typical Test Signal and Magnetic Radiation Noise.

If the magnetic radiation is not appearing as noise directly on the CRT display, perhaps there is enough low-level pickup in, say, a circuit amplifier, to change the circuit characteristics, and maybe that will puzzle the electronic circuit designer. Or perhaps, there is enough voltage induced in the circuit cabling to alter the net signal enough to produce characteristics different from those designed or expected.

LET US NOW CONSIDER the factors that determine the magnitude of magnetically induced voltage signals.

$$e_{ind} \propto \Phi \times f \times N \qquad \text{(eq. 1)}$$

In equation 1, Φ is the quantity of magnetic flux, represented by lines called lines of induction. By convention, the number of these lines per unit area at right angles to their direction is defined as the magnitude of the induction, and the induction is expressed in "lines per unit area". Lines of induction are called **Maxwells,** or **Webers** (1 Weber = 10^8 Maxwells), and magnetic induction is expressed in **Maxwells per square centimeter,** or in **Webers per square meter.** One Maxwell per square centimeter is called one **Gauss.**

The total number of lines of induction threading through a surface, the magnetic flux Φ , is, in general:

$$\Phi = \int B \cos\theta \, dA, \qquad \text{(eq. 2)}$$

where B is the magnetic induction or flux density in **Maxwells per square centimeter,** or **Webers per square meter,** and A is the area. In the special case in which B is uniform and normal to a finite area A, then

$$\Phi = B A. \qquad \text{(eq. 3)}$$

Generally speaking, however, we can only say that the voltage induced into a closed path (a circuit surrounding a transistor, the input circuit loop of an amplifier, a wire loop in a cable wire, etc.), depends on the effective area, A cos θ . Thus, if $\theta = 60°$, then cos θ = 0.5 and the area effectively coupled to the field flux is reduced by ½ from the theoretical maximum voltage.

In equation 1, "f" represents the frequency, usually of the power line driving the fan, for example 50 Hz, 60 Hz, or 400 Hz; plus the harmonics (usually odd) thereof. "N" is usually one turn, since most closed loops into which the fan field will couple are single-turn configurations.

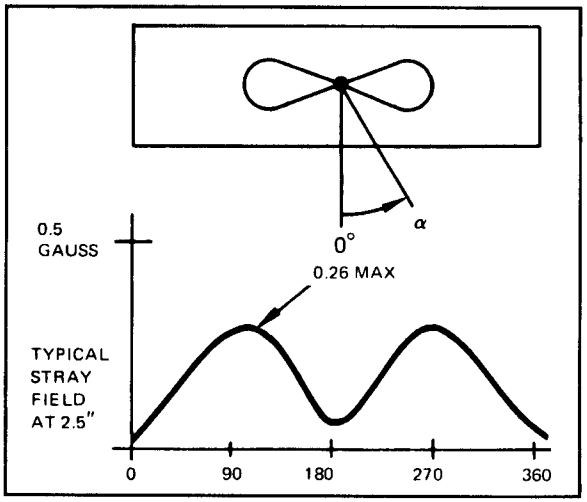

Figure 2.

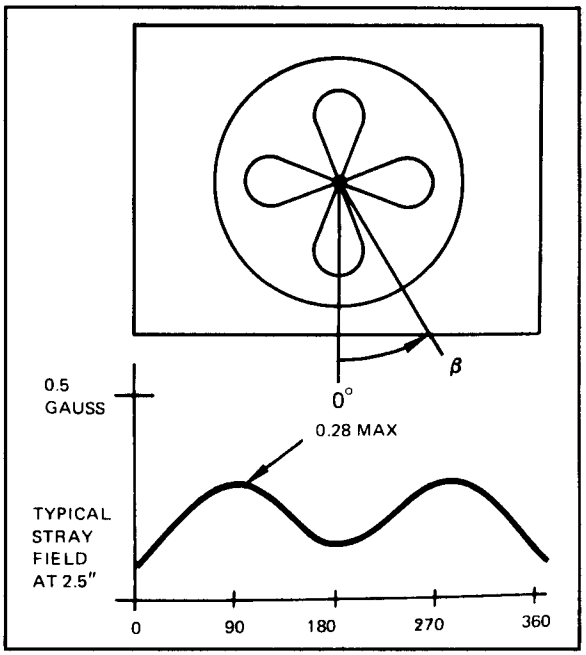

Figure 3.

For areas measured in cm^2, and N = 1 turn, and B in Gauss, the induced voltage is given by:

$$e_{ind} = 4.44\ f\ AB\ \cos\theta \times 10^{-8}\ Volts. \quad \text{(eq. 4)}$$

The graphs of figures 2 and 3 show the field strength "maps" made by a search coil carried around a fan at a distance of 2.5" from the shaft center at the blade end. The field is very small, because the fan uses the preferred "inside/out" (or "inside/outside") motor design. One curve shows the flux-density distribution in the plane of the blade rotation, and the other the flux-density distribution in the plane of the rotor shaft.

To get some idea of the effect of magnetic induction on a practical application, even with this low-field-strength, inherently self-shielded design, consider the following example:

A = 20 cm^2 (loop from amplifier input "high" to ground, through input resistor, and back from ground to "low")

B = 0.16 Gauss (α = 150°, β = 90°)

θ = 30° (orientation of loop with respect to field (B)

N = 1 turn, of course

f = 60 Hz (harmonics assumed negligible for this example).

From which we calculate:

E_{ind} = 4.44 x 60 x 20 x 0.16 x 0.866 x 10^{-8} Volts = 7.4 microvolts, or approximately 10 microvolts peak.

In a low-level amplifier input circuit, this could be very disturbing, indeed.

For a conventional fan motor, by the way, the field might have been 10 - 100 times as large, and the orientation would most certainly have created a peak very near the loop in question. **Forewarned is forarmed!**

So far, we have discussed the malign effects of magnetic radiation and the factors that proportion magnetically induced voltages. The time has come to discuss what we can do about reducing them.

Short of removing the fan entirely, presumably impossible, there are a number of ways to **reduce** the amount of magnetic radiation.

1. Rerouting
   Either reposition or reorient the fan or the circuit-element into which the undesired and intolerable field has been induced. Perhaps moving a component a short distance, or turning it slightly will remove the induced signal, or reduce it to an acceptable level. Often, the position and orientation of the fan is fixed or restricted by packaging or airflow considerations. Unfortunately, the magnitude of magnetic flux is, in most conventional fans, at a maximum in the path and direction of airflow, where, usually, the very components,

modules, and cabling we wish to protect from flux are most likely to be located. (More on this later.)

Recheck Figure 2, however, and you will see that directly in front of the fan, the stray field is at its minimum. This is true only of fans using the so-called "inside/out" motor design*.

2. Shielding
   Another effective way to eliminate or reduce induced magnetic noise is by shielding. This may mean "protecting" the component or module by a metal can. Perhaps an entire section can be "cordoned off". Sometimes, low-noise performance may be achieved by the judicious use of shielded cable.

   Why, you may ask, don't we shield the motor itself? Indeed, the "inside/out" design and all-metal housing and rotor effectively constitute a self-shielded motor. This reduces the electromagnetic radiation to low intensities so that circuitry in the equipment being cooled is much less affected by proximity to the fan. But shielding of a conventional motor is generally not possible, because it blocks the airflow.

INSIDE/OUTSIDE MOTOR DESIGN

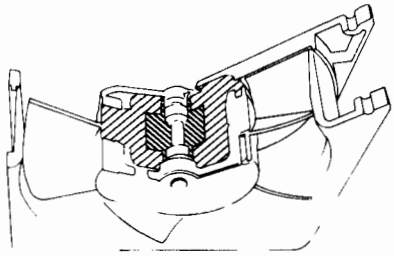

3. Reshaping the Magnetic Field
   This technique uses shorted-turn coils, usually single turns, known as "shading coils," which, when properly placed, will set up a magnetic field in opposition to that created by the motor. The overall effect is to reshape the motor's field of radiation and move it farther from circuit elements. A continuously looped copper ribbon, or a copper washer, properly placed, can achieve a 20 dB reduction in pickup at the sensitive point.
4. Using a Lower-Intensity Source
   As noted earlier in the discussion of acoustical noise, conservatively designed motors operate at lower flux densities, hence have less saturation . . greatly reducing the leakage field intensity.

EARLIER, we mentioned re-routing or repositioning as the best ways to avoid electromagnetic interference. Here are a few reminders and suggestions that you may find worthwhile at least as a checklist, when you begin "playing checkers" with the equipment, the enclosure, and the fan.

1. Power Supplies usually need the most direct access to the airstream, and can usually tolerate electromagnetic radiation better than most components . . . but remember that even power supplies have regulating ("error") amplifiers, and the signal level in them is of the order of 100 μV to 500 μV. Usually, however, this amplifier has great tolerance for 60 Hz pickup, and is well "buried" in the center of a steel chassis.
2. Bus cabling — particularly flat "ribbons" of paralleled cable conductors — are best kept far from the fan plane. Indeed, all cards facing a fan should be wired at the opposite edge, if possible. If cards must be "back-wired," consider a front-entry fan location.
3. Grounding may be more of a trouble than a help — if the grounding "bus" forms a long, high-area pickup loop, as it so often will. Watch out for "induced" ground loops . . . and avoid them by running all grounding paths in planes perpendicular to the main flux field.
4. One way to reduce all magnetic pickup, regardless of source, is to reduce the area of the pickup path. This sketch (figure 4) is worth a thousand words:

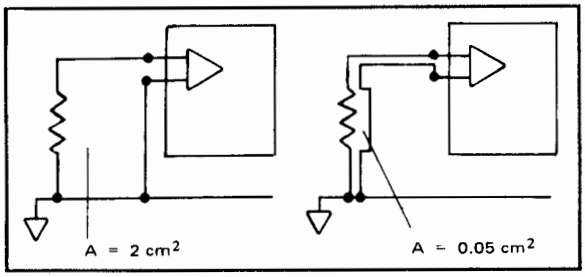

Figure 4. A pickup reduction of 40:1, merely by re-routing one lead.

5. Start with a low-field fan, and you may save hundreds of man-hours of troubleshooting, redesign, rework and even repackaging.

*Many Pamotor fans use that design — not by coincidence you may be sure.

CHAPTER 5

Evaluating the Performance of the Complete Cooling System

BY NOW, you have narrowed the selection of a suitable fan for your application – perhaps down to only one design. Or you may even have designed yourself into a corner, and have rejected all the available standard designs . . . each for one or more good reasons.

Regardless of your situation at this point in the design, the time has come to re-examine it from a systems viewpoint, and check its validity. (If you've run out of available fans, or practical combinations of available fans, you may want to look for primary relief – a new set of assumptions that will repoen the lists to some nearly acceptable designs.)

The most likely place to attack a stubborn design is in the **temperature-rise** assumption. Why did you decide that the temperature of the exhaust air could not be more than 25° higher than the highest incoming ambient? If you trace this decision back to its source (in your mind or someone else's) you will usually find that one or two motivations were at work:

1. Fear that the outgoing air would cause discomfort to personnel, or "overcome the room air conditioning," or "add to an already high ambient." **These fears are groundless, as we shall see,** if the application is at all practical, regardless of the fan or cooling system used!
2. Concern over the highest "hot-spot" temperature that will be reached, over and above the highest cooling-air temperature. **Now, this may or may not be a rational cause for concern, but usually something can be done to improve the situation.**

LET'S FIRST dispose of the room-heating-and/or air-conditioning question. If the system is going to move 900 Watts out of the cabinet into the room it doesn't matter (on an **energy** basis) whether it comes into the room at 200 CFM with only an 8° C temperature rise, or at 50 CFM with a 32° C temperature rise. 900 Watts is 900 Watts, and the air conditioning (natural or mechanical) is going to have to handle it.

Now it is true that you ought not to direct a blast of hot air at persons in the room . . . but that's easily handled by simple deflecting vanes, or a primitive dispersal duct, or even a stovepipe. Therefore, as long as you can mix the hot exhaust air with the rest of the room air before humans (or other sensitive mechanisms) are exposed to it, **the exhaust temperature can't affect the average room temperature . . . either way.**

THE SECOND REASON for limiting temperature rise may be more difficult to dismiss. To understand the relationship between "hot-spot" and air stream temperatures we shall use the simple but perfectly valid model of figure 1, and its electrical analog, figure 2.

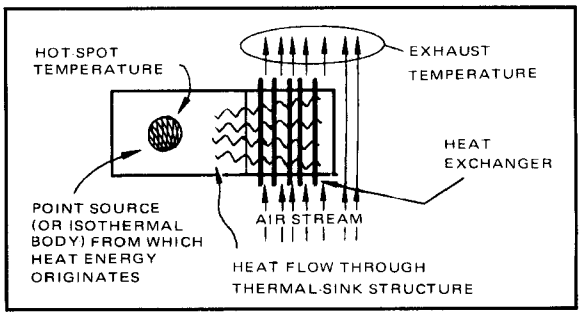

Figure 1. Representation of relationships among heat source, heat exchanger, and cooling air stream.

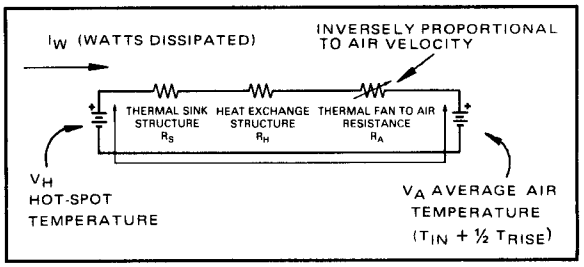

Figure 2. Electrical analog of figure 1.

It is immediately clear from firgure 1 that the temperature of the energy source (the "Hot-Spot" temperature) is higher than that of the exhaust airstream . . . but how much higher? Examination of

figure 2 shows that the hot-spot temperature can be minimized (i.e., held as close as possible to the exhaust air temperature) by minimizing three thermal resistances (measured in ° C/Watt, by the way):

1. The resistance of the thermal path from the heat source to the far end of the thermal sink.
2. The net resistance of the thermal paths from the heat sink body to the fin surfaces.
3. The net resistance of the thermal path from the heat-exchange fins to the air sweeping over them.

Of these three thermal resistances, the last is the largest by far and it is inversely proportional to the velocity of the air passing through the fins. **Therefore, the really significant factor in holding down the Hot-Spot temperature is attaining a high enough velocity of air through the heat exchanger.** How can we increase that velocity? There are many ways — ranging from the simple expedient of relocating the heat-exchange structure nearer to the main airstream, through the use of deflector vanes or constricted ducts, to the "last-ditch" addition of an internal, local fan mounted on or near the heat exchanger. These and other configurations are suggested by the sketches of figure 3.

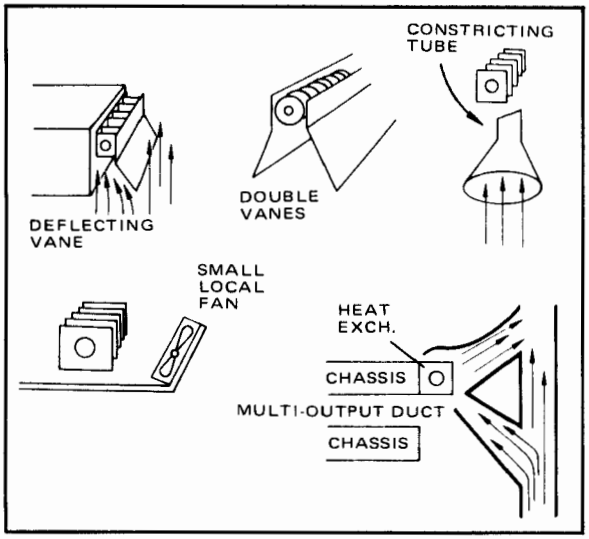

Figure 3. Increasing the air velocity through the heat exchanger.

NOW — having increased the velocity, we can allow ourselves a higher temperature rise, which permits a lower airflow rate (CFM is inversely proportional to temperature rise, you will recall) and that means, generally, that more fans will be capable of satisfying our requirement.

The one exception to this happy sequence of events is the case in which the vanes, ducts, or other expedients used to increase the velocity through the heat exchangers have increased the pressure drop to so marked an extent that the usable standard fans are once again very few, if any. This rarely happens, fortunately.

Of much greater concern than vanes or ducts (which usually intrude on only a part of the total airstream) are devices that intercept all of the airflow. These include:

- Filters
- Safety Guards of all kinds
- Decorative Grills of all kinds
- Exit Ports - escutcheons, venturis, simple-cutouts, etc.
- Entry Ports - same as Exit Ports

Every one of these interposed objects exacts its toll in pressure drop. Here, in figure 4, we show a typical pressure-volume relationship for a cooling system. Note the relative contributions of the individual components, and note particularly the fact that the basic enclosure is less than one-half of the total pressure drop!

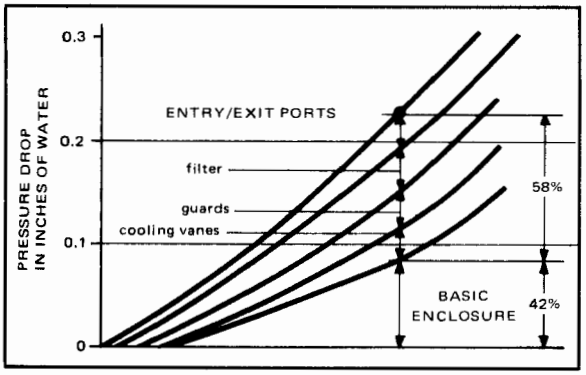

Figure 4.

What can be done about these necessary but unpleasant features of an airflow system? Once again, intelligent design can help significantly to reduce the effect of these mainstream pressure drops.

Here are a few observations that will immediately suggest practical remedies to the alert designer:

- The lower the velocity through a filter, a guard, or any other obstruction, the lower the pressure

drop. Clearly, for a given airflow in CFM, the velocity is inversely proportional to the area transverse to the airflow. If you are feeding air through a filter, the larger the filter, the lower the pressure drop through it. (And here's a bonus – at lower velocities, the filter's efficiency is much higher! You may elect to use one large filter, or two or more small ones . . . "in parallel," so to speak.

- The further you locate a guard away from the blades, the "looser-mesh" may be its design. If you set the guard back 2", you may be able to use a few thin wires or slats, instead of a finer mesh. If you are determined to let nothing larger than a flea through the safety guards, however, you might consider an oversized guard (see sketch in figure 5) which is the equivalent of the filters "in parallel," mentioned above.

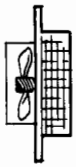

Figure 5. Oversize Guard has lower pressure drop.

- Lowering the velocity of the airstream through or past an obstruction reduces the noise it generates.
- An abrupt transition of any kind – direction, area, cross-sectional profile – from one part of an airstream to another creates far more pressure drop than a smooth, gradual transition. (Look at the venturi in an axial fan, if you want a good example of good practice.) Surprisingly, figure 6b has lower pressure drop at moderate to high CFM than figure 6a, although its average cross-section is markedly smaller, and the mean airflow path is longer.

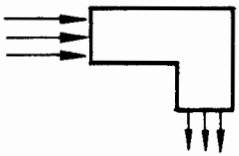

Figure 6a. Abrupt transition in direction and cross section.

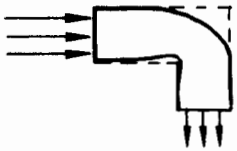

Figure 6b. Gradual transition in direction and cross section.

- Sheetmetal cutouts, unless preceded or followed by venturi-like air guides, are sharp transitions. Figure 7a has more pressure drop than figure 7b, despite larger effective area.

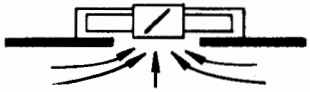

Figure 7a. Abrupt entry cutout.

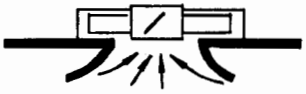

Figure 7b. Gradual entry port (venturi-like).

- Decorative grilles should be treated like guards or filters, and the principles of figures 5-7 should be applied. Take a look at the slat-grille designs on modern air-conditioning units – especially the small window designs. They can't spare pressure drop either . . . and they minimize it in the necessary decorative trim by following the design practices we've suggested above.

IF YOUR BACK is to the wall – and you've tried everything, but the fan you'd like to use just won't do what you want, you might find it necessary to try for a new or modified enclosure design that achieves optimum utilization of the fan's air-moving capabilities. Alternatively, you might want to know how to select a fan that is being "fully loaded."

This analysis, although based on an "idealized" fan characteristic, will be found to be a very close approximation, for most common axial and similar fans.

It begins by assuming that the pressure-vs.-airflow relationship is linear between its intercepts, as shown in figure 8.

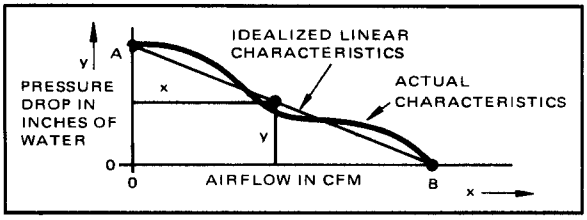

Figure 8. Straight-line approximation to actual fan characteristic

The general equation for this straight line is:

$$x = B\left(1 - \frac{Y}{A}\right) \qquad \text{(eq. 1)}$$

Now, it is easily shown that the work done by the fan (the energy output) is proportional to the area xy.

Multiplying equation (1) by y, we get:

$$xy = By - \left(\frac{B}{A}\right) y2 \qquad \text{(eq. 2)}$$

To find the values of x and y (i.e., the operating point) at which xy is a maximum, we first differentiate equation (2) with respect to y:

$$\frac{d\,(xy)}{dy} = B - 2\left(\frac{B}{A}\right) y \qquad \text{(eq. 3)}$$

and set the derivative equal to zero:

$$\frac{d\,(xy)}{dy} = 0 = B - 2\left(\frac{B}{A}\right) y \qquad \text{(eq. 4)}$$

and solve for y:

$$y = \frac{A}{2}$$

then we substitute this value into equation (1), and find that:

$$x = \frac{B}{2}$$

Therefore, the maximum air-moving energy delivered by the idealized fan occurs at:

$$\text{airflow} = \frac{B}{2}\ \text{CFM}$$

$$\text{pressure drop} = \frac{A}{2}\ \text{inches of water}$$

This not very startling result is exactly analagous to the conclusion that a generator delivers maximum power when the load resistance equals the internal resistance.

In fact, if one calls the "internal resistance" of the fan B/A, and finds a cooling system having a resistance to airflow of exactly B/A inches per CFM, then one can "load" the fan to its maximum capability.

Ah yes, you say, but we find ourselves starting at the other end of the problem. We know the airflow resistance – what we need to find is a fan having intercepts B and A that yield a matching ratio.

Well, that would be very lucky indeed . . . but we have shown that we can actually change the required airflow resistance over wide ranges, by altering the internal velocities, and thereby allowing ourselves higher temperature rise, if necessary. Therefore, we can almost adjust the cabinet airflow resistance to B/A.

In the limiting case, the allowable temperature rise is very nearly from ambient to the "hot-spot" temperature. Therefore, the "analytical" approach to forcing an optimum design is as follows:

1. Take the temperature rise as only about ten degrees less than hot-spot minus ambient (highest ambient, of course).
2. Calculate CFM from the total Watts of dissipation and that optimistic temperature rise.
3. Calculate or estimate the pressure drop of the enclosure, including whatever velocity-boosting things are needed to ensure good heat transfer.
4. Find a fan in which B/2 is very close to or slightly larger than the CFM calculated in (2) above, and A/2 is very close to, or slightly larger than the pressure drop estimated or calculated in (3) above. **That's the fan that will be optimally matched to this requirement.**

You may not need (or want) to live quite so "dangerously," but at least you will know exactly how small the fan's power could safely be. Larger fans, properly "loaded" (matched) will then be safer for this application.

Remember that the higher the temperature rise of the air in the system, the more efficient the design. You will probably want to trade efficiency for added hot-spot margin, but that should not be done until you are certain that you know where the margin begins.

CHAPTER 6

Ensuring Optimum Reliability in the Complete Cooling System

By now you have probably narrowed the slate of fan "candidates" for your application down to the few that pass all tests in steps 1-5, i.e., that are acceptable as to:

- Required airflow and back pressure
- Size, shape and style
- Noise levels
- Magnetic radiation levels
- Compatibility with the complete cooling system.

The sixth and final step in the procedure is to pick the most reliable fan of the candidates remaining. (Not simple, but essential.) Normally, to do this, you would check the first standard gauge of reliability rating that comes to mind: the published ratings of the eligible fans for MTBF—Mean Time Between Failure. And when you do, you will realize that MTBF is not enough of a distinction. Assuming that one or more of the eligible fans is ours, you will find that Pamotor certainly has done its reliability homework, as measured by MTBF figures. We could leave it at that, or continue with an in-depth discussion of MTBF; but splitting hairs about MTBF is not our mission. We submit that although MTBF ratings are a necessary element in measuring reliability, they are not in themselves a sufficient condition of dependability.

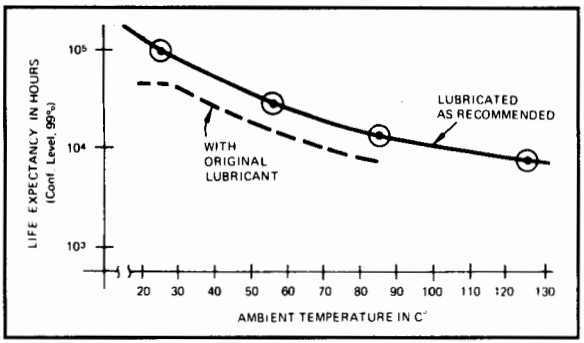

To be so, MTBF computation would have to measure all likely design and manufacturing characteristics that affect dependability . . . and they do not. To be sure, they do measure a few important characteristics, such as projected life of winding insulation, expected lubricant life, and hot-spot temperature rise in the motor windings. With its experience in the application of fan material and configurations, Pamotor Engineering has designed fans that have reassuringly high MTBF ratings – as do many fans made by many leading manufacturers. Despite this fact, many fan designs fail much more often, and much earlier, than do Pamotor fans. So MTBF is not the complete guide to dependability that it ought to be.

Our extreme confidence in the dependability of Pamotor fans comes from a totally different source of data than our MTBF figures of merit. To state it succinctly, without elaborate qualification, our confidence is based on this: **In over 25 million fan years, we know of only about 1800 "valid" failures* of Pamotor fans.**

But the reason for our confidence goes beyond even this remarkable record. We have surveyed and studied, not only the causes of our own failures – few and random over many years –but also why and how other manufacturers' fans fail in the field. In one isolated instance –due to an undetectable termination weakness – a group of Pamotor fans became open-circuited, because a self-lead was nicked during crimping. (This one group of fans, by the way, constituted 83% of all of our failures, in the numbers cited previously!). All other failures were random, non-systematic, and clearly not traceable to a design weakness or a manufacturing or testing deficiency.

On the other hand, our findings on failures experienced by users of other manufacturers' fans show very definite patterns of design-traceable failure.

There is, for example, a preponderance of bearing failures, caused principally by (a) premature loss of lubricant and (b) dynamic unbalance of the fan rotor.

*A "valid" failure is one in which the fan was apparently operated under rated conditions, and was not improperly mounted or involved in catastrophic physical damage to the equipment.

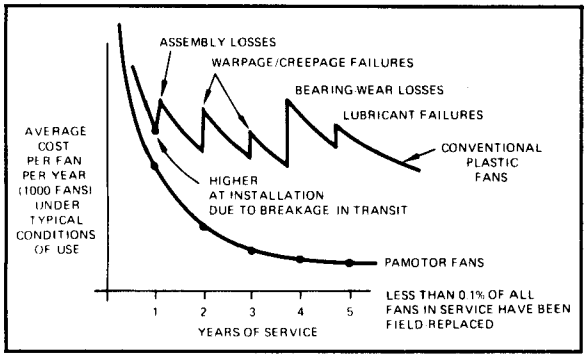

Pamotor has invested many man-years of attention to lubrication design and to quality assurance in bearing manufacturing. On the design level, noteworthy developments have included new synthetic lubricants, provision of extra-large reservoirs, extra-large bearings, and design of leak-proof end-seals. Beyond design improvements, several other factors have helped to eliminate bearing failure in Pamotor fans . . . assuming rated conditions and normal maintenance. These include hand-broaching of bearings, extremely tight tolerances in all shaft and bearing surfaces, and multiple inspection cycles, during which each dimension is subject to at least two independent verifications.

With respect to bearing failures caused by dynamic unbalance, there are two factors that explain our apparent superiority:

1. Pamotor has unique automatic balancing equipment, with the capability of micro-inch dynamic balancing. Our normal manufacturing standard is balancing to within 5 microinches on both end-planes. (This is from 3 to 20 times better than other manufacturers' standards.)

2. Most Pamotor fans are all-metal fans. They maintain their dynamic balance, year in and year out. Some plastic fans may be well aligned at the factory, but after shipment and installation, they can distort, creep, or sag, causing unbalancing misalignment. And a misaligned, unbalanced fan is not only noisier, but is is steadily ruining its own bearings, drastically shortening its life.

Our findings show that the largest single failure mode exhibited by other manufacturers' fans is rotor-shaft freezing . . . probably due to dry or misaligned bearings. But bearing failure does not have to be catastrophic to be adverse — just listen to (and feel) the noise and vibration output of the rumbling, annoying clunker that was so quiet and smooth when it was new, less than a year ago!

PAMOTOR All-Metal Construction Nine Ways Better

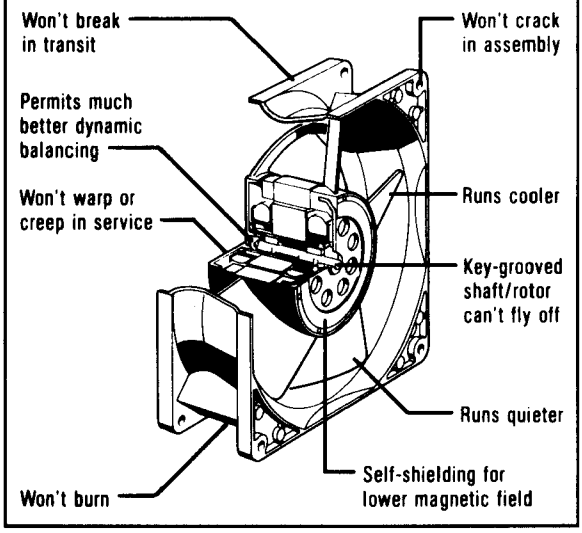

There are many other factors causing fan failures, although none is as consistent or significant as bearing failures. The striking thing to us is that the quantity and variety of failures of other manufacturers' fans that we have surveyed indicate that ours are far more dependable. We are convinced that this clearcut superiority is traceable to our design and manufacturing conservatism — conservatism in the use of superior materials — conservatism in the establishment of margins of safety — conservatism in the insistence on tight tolerances.

And yet, we have not rested on our enviable record of reliability in service. We continue to develop new, improved structures and materials.

NOW — what does all this admittedly self-serving information mean to the designer faced with selecting the optimum fan for his applicaion? Just this. What

you will probably find, after surveying all of the technical literature on fans, is that 90% of all your applications point to a small group of fans, and this group will include two or three Pamotor fans.

In this 90% of your applications, the Pamotor fan will probably give you most, if not all, of the following clear-cut advantages:

- In the same fan group, Pamotor fans give 10-20% more cooling work-output, as measured by air flow in CFM times pressure drop in inches of water.
- Pamotor fans will usually exhibit lower noise.
- Pamotor fans will exhibit substantially less magnetic field radiation, and the orientation of that field will be much more tolerable than that of other fans.
- Pamotor all-metal fans will be stronger and more rigid than most of their counterparts.
- Despite all this, Pamotor fans will be competitive in real cost.

If we are stating the case correctly, you won't need our assurances of extraordinary dependability. **But if you do, we want you to know that we sincerely believe that our fans have the best reliability record of any in their class.** There isn't any subtle, "objective" way of saying that, so we'll admit our prejudice, and say it anyway.

ONE FURTHER NOTE – You have the right to ask: To do all this . . . to get a better preforming fan at less money, where did they cut corners? And the simple answer is that we did not. All of our superiority was achieved through superior design, manufacturing and tooling efficiency, and pride – in the integrity of our designs, and the consistent perfection of our products.

Looking Back . . .

We have now examined, in some detail, all six topics in this series. Each is a logical step in the design procedure we recommend. There are six steps altogether:

Step 1 – Determine the required airflow and back pressure, as described in Chapter 1.

Step 2 – Select a size, shape and style of fan that will fit, will be easy to assemble, and will direct the airflow properly . . . as described in Chapter 2.

Step 3. – Verify that the SIL (Speech Interference Level), and the corollary vibration and microphonic effects as well, of the available fan will be acceptable in your application. If not, repeat steps 1, 2 and 3, until a fan is found that satisfies all three. All this is covered in Chapter 3.

Step 4 – Verify that the magnetic field radiation of the fan will be low enough, or that its orientation is benign, for your application. Methods of altering field orientation and of reducing field strength, are among the alternatives considered in Chapter 4.

Step 5 – Design the tentatively selected fan into a complete cooling **system,** making it as elaborate as need be. Then, check your estimated back pressure maximum (see step 1). If necessary, repeat steps 1-5, using a fan capable of higher (or lower) back pressure. All this is covered thoroughly in Chapter 5.

Step 6 – Consider the acceptable available fans – the ones that pass all the tests in steps 1-5. **Then pick the most reliable one . . . as discussed in** Chapter 6.

SOLID STATE, BRUSHLESS, DC FANS & BLOWERS

Engineered like no other cooling devices in the world.

DC Fans and Blowers

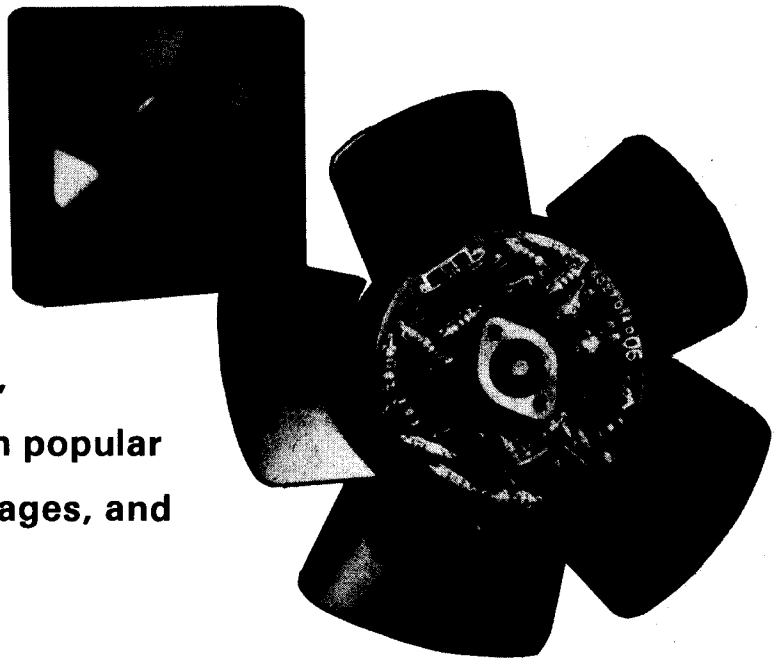

PAMOTOR is the only company offering you a full family of solid state, brushless DC fans in popular frame sizes and voltages, and at popular prices.

PAMOTOR has a full line of self-contained, solid state, brushless DC fans for you to choose from. Through their design, these fans have been engineered to tackle those specialized applications which require highly reliable DC performance. Common uses include mobile radio equipment, medical electronics, shipboard computers, airborne applications, communications systems, automotive applications, marine use and telecommunications; wherever DC voltage is normally available. They are also finding wide acceptance for use in power stand-by modes to prevent memory loss in the event of AC power failure.

These fans are especially efficient and will outperform similar sized fans at normal operating back pressure. Typically, they offer greater air volume (cfm), reduced noise levels and reduced power drain. For example, the power drain at maximum back pressure is approximately 25% of that required in conventional AC units. These fans also achieve a new low in magnetic radiation and RF noise, thereby assuring the pure signals necessary for critical airborne or shipboard use.

These fans work well at all rated voltages, and are extremely quiet. They can be adjusted for performance and noise level by altering the voltage within the voltage range for your particular application. They feature a brushless motor with all electronics mounted on a PC card within the motor frame. Drive amplifiers for the motor are controlled by a patented Hall-effect generator circuit which is coupled by small pole pieces to the motor's field magnet (Patent No. 3-873-897). Available voltages include 5 VDC nominal, 12 VDC nominal, 24 VDC nominal and 48 VDC nominal.

The brushless DC motor is polarity protected* to avoid accidental damage and costly down time. If the input polarity is accidentally reversed, integral diodes block all circuits and the motor simply stops. Even in a locked rotor condition,* the motor goes into a neutral state to avoid damage. Precision bearings and lubricants help to achieve a life expectancy of 35,000 hours (sleeve bearings) and 60,000 hours (ball bearings) at maximum permissible ambient temperature. Note: If the ambient temperature in which the fan operates is 20°C below the above levels, the life expectancy increases by 10,000 hours.

These fans do not require an external voltage inverter. This means that you save valuable mounting space and weight because the only consideration in mounting is the fan itself. This new concept has eliminated many of the inherent reliability and RF noise problems generally associated with using AC motors in a DC environment.

*Except for 5 Volt models.

DC Fans Quick Selection Guide

Model	Voltage Range	Airflow Range	Nominal Input Power (zero static pressure)	Frame Size
	VDC	cfm	Watts	inches
812	6-15	11-29	3.0	2-1/2 sq. × 1 D
814	12-30	11-29	3.0	
3124F	18-30	34-57	2.5	3-5/8 sq. × 1 D
4105GX	4.5-5.5	80-100	4.0	4-11/16 sq. × 1-1/2 D
4112X	9.5-14	82-122	4.0	
4112GX	8-16	60-120	4.3	
4112KX	8-14.5	75-125	6.0	
4124X	19-28	82-122	4.1	
4124GX	18-30	70-120	4.3	
4124KX	18-29	90-125	6.0	
4124F	18-30	80-120	6.0	4-11/16 sq. × 1 D
4148X	38-56	82-122	4.1	4-11/16 sq. × 1-1/2 D
6124	16-32	150-250	11.0	6-3/4 dia. × 2-3/16 D
6148	32-60	150-250	10.5	
8105G	4.5-5.5	30-40	3.0	3-1/8 sq. × 1-1/2 D
8112	9.5-14	30-43	2.9	
8112G	8-16	25-48	3.0	
8112K	8-16	20-48	3.0	
8124	19-28	30-43	3.0	
8124G	18-30	25-43	3.0	
8124K	18-30	27-44	3.0	
8148	38-56	30-43	3.1	
RL90-18/24	19-28	18-31	5.2	4-3/4 sq. × 1-1/2 D

Model 812
2½" 12VDC
Axial Fan

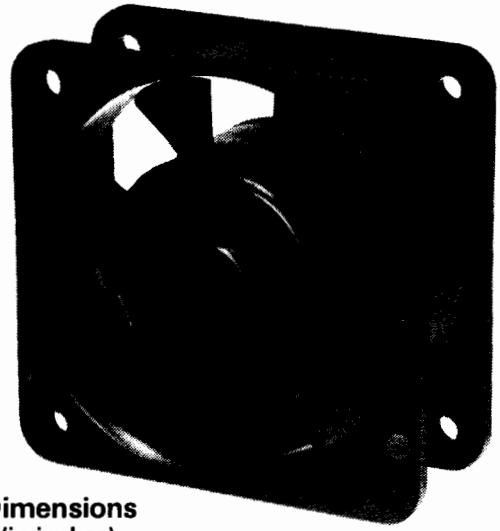

Dimensions
(in inches)

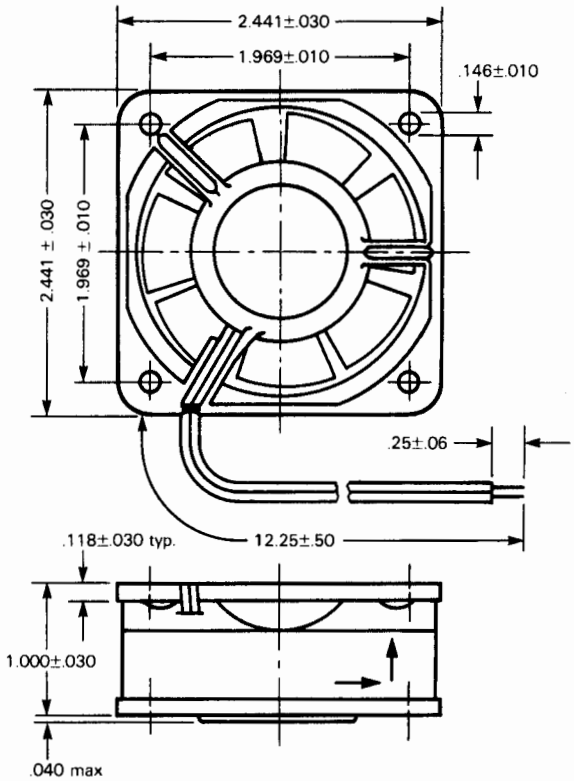

FEATURES:

- **Brushless electronic motor.**
- **Solid state integral electronics, no external inverter required.**
- **Conforms to UL, CSA, IEC and VDE stds.**
- **Precision ball bearing system.**
- **Long operating life without maintenance.**
- **Low input power.**
- **Polarity protected.**
- **Electronic locked rotor protection.**

GENERAL DESCRIPTION

This bulletin describes the electrical and mechanical parameters of the PAMOTOR Model 812 miniature axial fan.

PERFORMANCE CHARACTERISTICS

Airflow. **15 VDC**
29 cfm at 0 Static Pressure
25 cfm at .10 inch H_2O
0 cfm at .44 inch H_2O
(maximum static pressure)

12 VDC
23 cfm at 0 Static Pressure
15 cfm at .10 inch H_2O
0 cfm at .31 inch H_2O
(maximum static pressure)

6 VDC
11 cfm at 0 Static Pressure
3 cfm at .05 inch H_2O
0 cfm at .06 inch H_2O
(maximum static pressure)

ACOUSTICAL CHARACTERISTICS

40 dB (A) at 12 VDC
28 dB (SIL) at 12 VDC

MECHANICAL CHARACTERISTICS

Venturi Block. The venturi block is made of glass fiber reinforced plastic.

Impeller. The impeller blades are made of black, glass-fiber reinforced plastic, press-fit to the rotor and aerodynamically contoured for optimum pressure/air delivery performance.

Terminals. Two leads of No. 22 AWG insulated wire. Red identifies the positive lead.

Bearing System. The precision ball bearing system ensures long life in a high-temperature environment, and provides maximum shock and vibration resistance.

Lubrication. This fan is lubricated within the sealed bearing system by a special lubricant permitting extended operation at elevated ambient temperatures and is guaranteed to -40°C.

Weight. This fan weighs only 3 ounces.

Mounting. The tightening torque of mounting screws should not exceed 14 inch-ounces. An even mounting surface is recommended.

MOTOR

Basic Design. The Model 812 has a brushless DC motor which is polarity protected.

Rotor Balance. The rotor is dynamically balanced to a maximum shift of the center of gravity of .0001" in each end plane.

Rotation. Counterclockwise, facing the air discharge.

Windings and Splices. The windings are treated with high-temperature varnish and are further insulated with individual sleeving.

Stator Protection. Stator laminations are treated with high-temperature varnish for protection against deterioration.

Insulation Resistance. The insulation resistance is ≥5 megohms measured at 500 VDC after 48 hours humidity storage.

Insulation Class. The insulation classification is 120°C.

Dielectric Strength. This fan will withstand 600 VAC RMS for one second at 20° C and 40% relative humidity.

Speed.

6 VDC	12 VDC	15 VDC
2450 RPM	5300 RPM	6500 RPM

Horizontal Airflow at Zero Static Pressure

2400 RPM	5200 RPM	6400 RPM

Horizontal Airflow at Maximum Static Pressure

ELECTRICAL CHARACTERISTICS

Operating Voltage. The Model 812 is designed for operation at 6-15 VDC (12 VDC nominal).

Power Rating.

6 VDC	12 VDC	15 VDC
.75 Watts	3.0 Watts	4.5 Watts

Input Power at Zero Static Pressure

.75 Watts	3.0 Watts	4.5 Watts

Input Power at Maximum Static Pressure

Input Current.

6 VDC	12 VDC	15 VDC
125 mA	250 mA	300 mA

Zero Static Pressure

125 mA	250 mA	300 mA

Maximum Static Pressure

ENVIRONMENTAL CHARACTERISTICS

Operating Temperature Range. This fan is designed to operate over a temperature range of -10° C to +65° C.

QUALITY VERIFICATION

Life Expectancy. The life expectancy of this fan is 60,000 hours at 65° C.

Safety Codes. This fan conforms to UL, CSA, VDE and IEC standards.

Performance Data

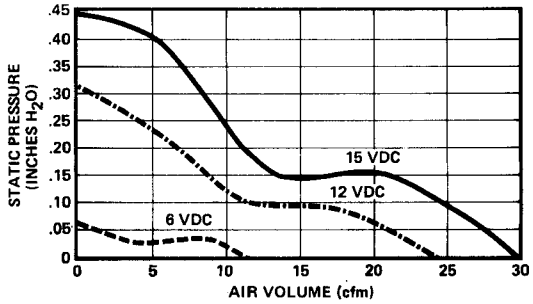

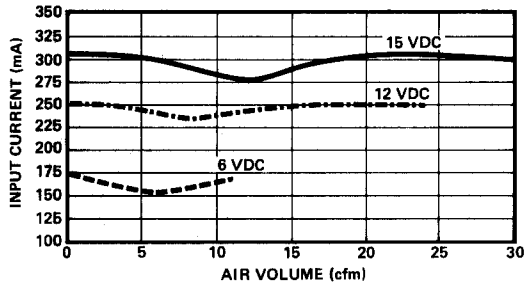

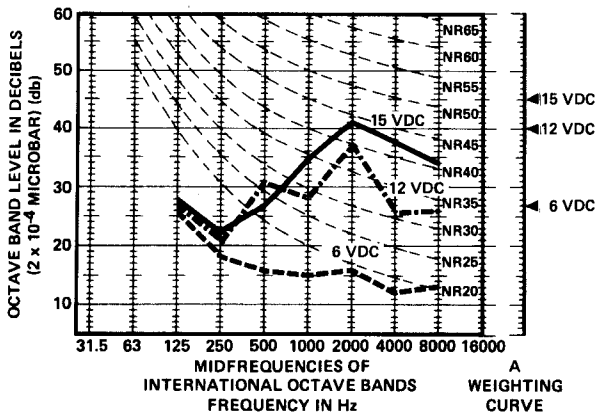

MOUNTING DIMENSIONS

Please see Drawing 7, page 137 of this catalog.

Model 814
2½" 24 VDC
Axial Fan

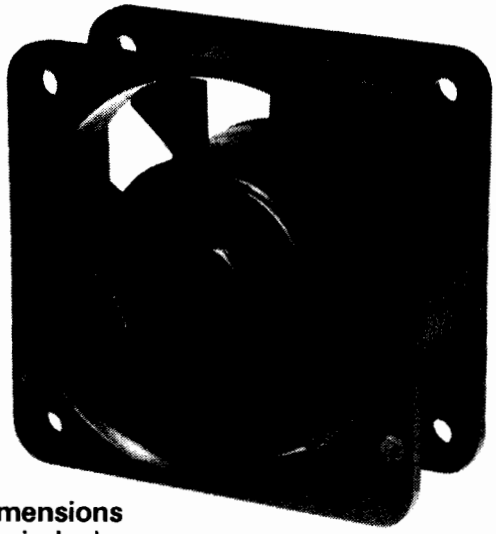

Dimensions
(in inches)

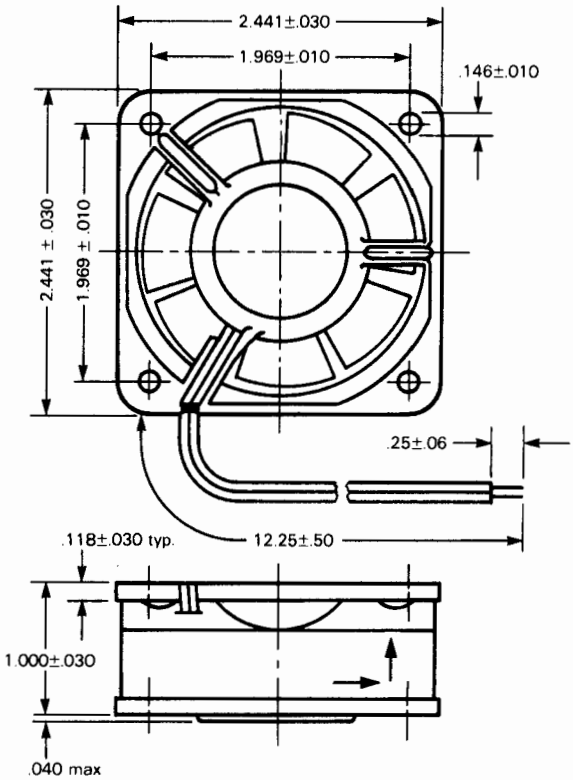

FEATURES:

- **Brushless electronic motor.**
- **Solid state integral electronics, no external inverter required.**
- **Conforms to UL, CSA, IEC and VDE stds.**
- **Precision ball bearing system.**
- **Long operating life without maintenance.**
- **Low input power.**
- **Polarity protected.**
- **Electronic locked rotor protection.**

GENERAL DESCRIPTION

This bulletin describes the electrical and mechanical parameters of the PAMOTOR Model 814 miniature axial fan.

PERFORMANCE CHARACTERISTICS

Airflow. **30 VDC**
29 cfm at 0 Static Pressure
25 cfm at .10 inch H_2O
0 cfm at .44 inch H_2O
(maximum static pressure)

24 VDC
23 cfm at 0 Static Pressure
15 cfm at .10 inch H_2O
0 cfm at .31 inch H_2O
(maximum static pressure)

12 VDC
11 cfm at 0 Static Pressure
3 cfm at .05 inch H_2O
0 cfm at .06 inch H_2O
(maximum static pressure)

ACOUSTICAL CHARACTERISTICS

40 dB (A) at 24 VDC
28 dB (SIL) at 24 VDC

MECHANICAL CHARACTERISTICS

Venturi Block. The venturi block is made of glass fiber reinforced plastic.

Impeller. The impeller blades are made of black, glass-fiber reinforced plastic, press-fit to the rotor and aerodynamically contoured for optimum pressure/air delivery performance.

Terminals. Two leads of No. 22 AWG insulated wire. Red identifies the positive lead.

Bearing System. The precision ball bearing system ensures long life in a high-temperature environment, and provides maximum shock and vibration resistance.

Lubrication. This fan is lubricated within the sealed bearing system by a special lubricant permitting extended operation at elevated ambient temperatures and is guaranteed to -40°C.

Weight. This fan weighs only 3 ounces.

Mounting. The tightening torque of mounting screws should not exceed 14 inch-ounces. An even mounting surface is recommended.

MOTOR

Basic Design. The Model 814 has a brushless DC motor which is polarity protected.

Rotor Balance. The rotor is dynamically balanced to a maximum shift of the center of gravity of .0001" in each end plane.

Rotation. Counterclockwise, facing the air discharge.

Windings and Splices. The windings are treated with high-temperature varnish and are further insulated with individual sleeving.

Stator Protection. Stator laminations are treated with high-temperature varnish for protection against deterioration.

Insulation Resistance. The insulation resistance is ≥5 megohms measured at 500 VDC after 48 hours humidity storage.

Insulation Class. The insulation classification is 120°C.

Dielectric Strength. This fan will withstand 600 VAC RMS for one second at 20° C and 40% relative humidity.

Speed.

12 VDC	24 VDC	30 VDC
2450 RPM	5300 RPM	6500 RPM

Horizontal Airflow at Zero Static Pressure

2400 RPM	5200 RPM	6400 RPM

Horizontal Airflow at Maximum Static Pressure

ELECTRICAL CHARACTERISTICS

Operating Voltage. The Model 814 is designed for operation at 12-30 VDC (24 VDC nominal).

Power Rating.

12 VDC	24 VDC	30 VDC
.75 Watts	3.0 Watts	4.5 Watts

Input Power at Zero Static Pressure

.75 Watts	3.0 Watts	4.5 Watts

Input Power at Maximum Static Pressure

Input Current.

12 VDC	24 VDC	30 VDC
63 mA	125 mA	150 mA

Zero Static Pressure

63 mA	125 mA	150 mA

Maximum Static Pressure

ENVIRONMENTAL CHARACTERISTICS

Operating Temperature Range. This fan is designed to operate over a temperature range of -10° C to +65° C.

QUALITY VERIFICATION

Life Expectancy. The life expectancy of this fan is 60,000 hours at 65°C.

Safety Codes. This fan conforms to UL, CSA, VDE and IEC standards.

Performance Data

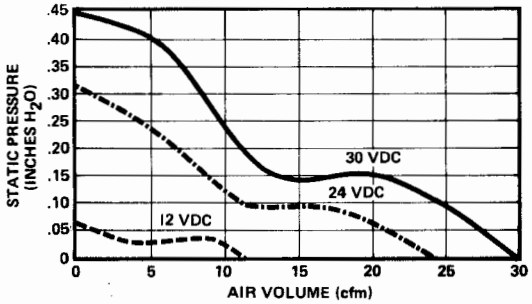

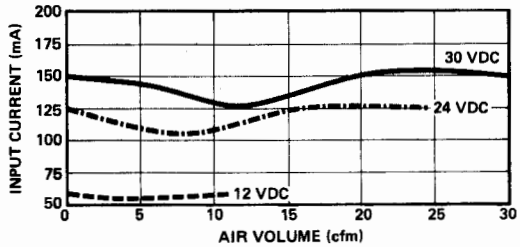

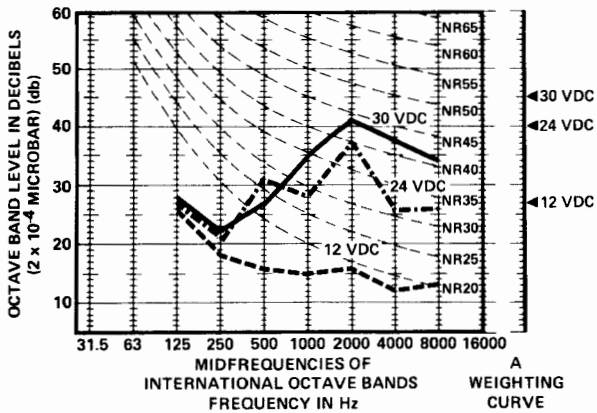

MOUNTING DIMENSIONS

Please see Drawing 7, page 137 of this catalog.

Model 3124F 3⅝" All Metal 24VDC Axial Fan

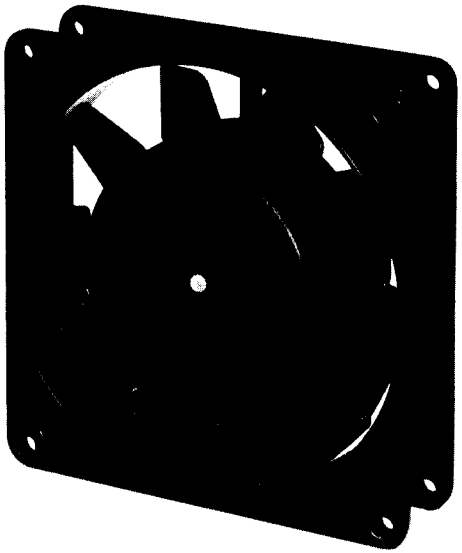

Dimensions
(in inches)

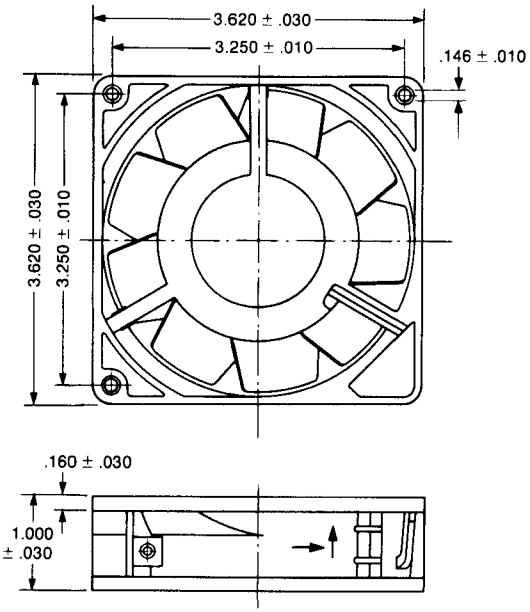

FEATURES:

- Extra-slim profile.
- All-metal, brushless electronic motor.
- Terminal block.
- Solid state integral electronics.
- No external inverter required.
- Polarity protected.
- Precision ball bearing system.
- Low EMI.

GENERAL DESCRIPTION

This bulletin describes the electrical and mechanical parameters of the PAMOTOR Model 3124F miniature axial fan.

PERFORMANCE CHARACTERISTICS

Airflow. **30 VDC**
57 cfm at 0 Static Pressure
47 cfm at .10 inch H_2O
0 cfm at .38 inch H_2O
(maximum static pressure)

24 VDC
45 cfm at 0 Static Pressure
20 cfm at .10 inch H_2O
0 cfm at .27 inch H_2O
(maximum static pressure)

18 VDC
33 cfm at 0 Static Pressure
11 cfm at .10 inch H_2O
0 cfm at .17 inch H_2O
(maximum static pressure)

ACOUSTICAL CHARACTERISTICS

40 dB (A) at 24 VDC
30 dB (SIL) at 24 VDC

MECHANICAL CHARACTERISTICS

Venturi Block. The venturi block is made of die-cast aluminum alloy, and is specifically designed for light-weight, noiseless, efficient airflow and rapid heat dissipation.

Impeller. The impeller blades are all-metal, impulse-welded to the rotor and are aerodynamically contoured for optimum pressure/air delivery performance.

Finish. This fan is protected by a moisture resistant black finish.

Terminals. The terminals are designed for use with No. 18 AWG wire or a quick disconnect plug and cord assembly, PAMOTOR Part No. 5505.

Bearing System. The precision ball bearing system ensures long life in a high-temperature environment, and provides maximum shock and vibration resistance.

Lubrication. This fan is lubricated within the sealed bearing system by a special lubricant permitting extended operation at elevated ambient temperatures.

Weight. This fan weighs only 14 ounces.

MOTOR

Basic Design. The Model 3124F has a brushless DC motor which is polarity protected.

Rotor Balance. The rotor is dynamically balanced to a maximum shift of the center of gravity of .0001" in each end plane.

Rotation. Counterclockwise, facing the air discharge.

Windings and Splices. The windings are treated with high-temperature varnish and are further insulated with individual sleeving.

Stator Protection. Stator laminations are treated with high-temperature varnish for protection against deterioration.

Insulation Resistance. The insulation resistance is ≥5 megohms measured at 500 VDC after 48 hours humidity storage.

Insulation Class. The insulation classification is 120°C.

Dielectric Strength. This fan will withstand 600 VAC RMS for one second at 20° C and 40% relative humidity.

Speed.

18 VDC	**24 VDC**	**30 VDC**
2250 RPM	3000 RPM	3700 RPM

Horizontal Airflow at Zero Static Pressure.

2150 RPM	2850 RPM	3450 RPM

Horizontal Airflow at Maximum Static Pressure

ELECTRICAL CHARACTERISTICS

Operating Voltage. The Model 3124F is designed for operation at 18-30 VDC (24 VDC nominal).

Power Rating.

18 VDC	**24 VDC**	**30 VDC**
1.4 Watts	2.5 Watts	2.9 Watts

Input Power at Zero Static Pressure.

1.8 Watts	3.0 Watts	4.7 Watts

Input Power at Maximum Static Pressure

Input Current.

18 VDC	**24 VDC**	**30 VDC**
79 mA	103 mA	135 mA

Zero Static Pressure

82 mA	115 mA	150 mA

Maximum Static Pressure

ENVIRONMENTAL CHARACTERISTICS

Operating Temperature Range. This fan is designed to operate over a temperature range of -20°C to +65°C.

QUALITY VERIFICATION

Life Expectancy. The life expectancy of this fan is 60,000 hours at 65°C.

Safety Codes. This fan conforms to UL, CSA, VDE and IEC standards.

Performance Data

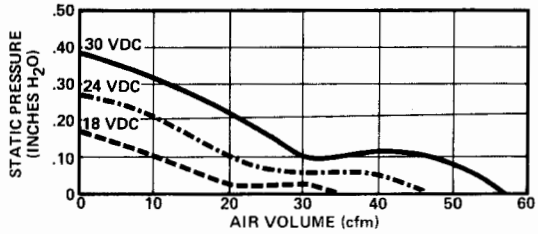

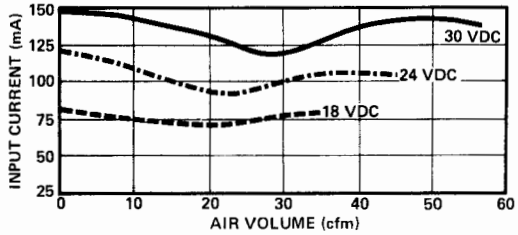

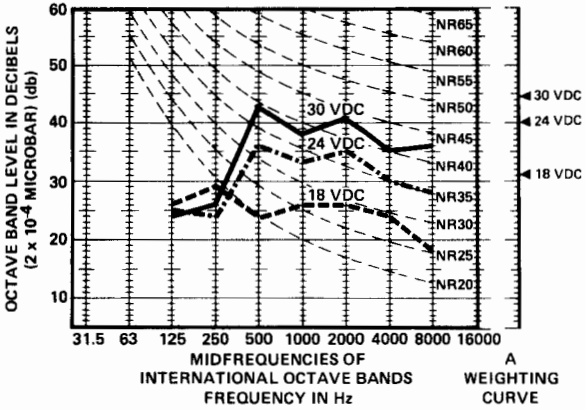

MOUNTING DIMENSIONS

Please see Drawing 6, page 137 of this catalog.

ACCESSORIES

PAMOTOR offers a full line of accessory items for its fans. Please refer to pages 140-141 of this catalog.

Model 4105GX
4 11/16" 5VDC
Axial Fan

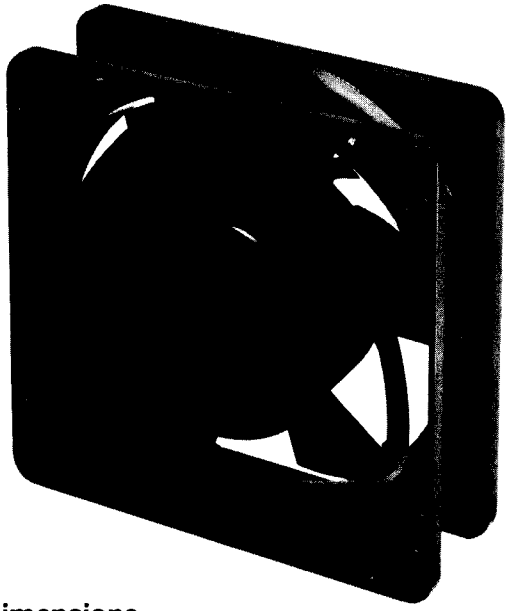

Dimensions
(in inches)

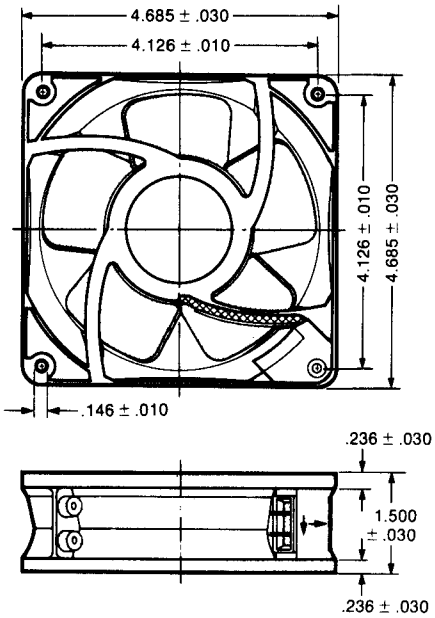

FEATURES:

- Brushless electronic motor.
- Terminal block.
- Solid state integral electronics.
- No external inverter required.
- Low input power.
- Sleeve, broached sintered iron bearing system.
- Low EMI.

GENERAL DESCRIPTION

This bulletin describes the electrical and mechanical parameters of the PAMOTOR Model 4105GX miniature axial fan.

PERFORMANCE CHARACTERISTICS

Airflow. **5.5 VDC**
100 cfm at 0 Static Pressure
82 cfm at .10 inch H_2O
0 cfm at .39 inch H_2O
(maximum static pressure)

5 VDC
92 cfm at 0 Static Pressure
71 cfm at .10 inch H_2O
0 cfm at .31 inch H_2O
(maximum static pressure)

4.5 VDC
82 cfm at 0 Static Pressure
60 cfm at .10 inch H_2O
0 cfm at .26 inch H_2O
(maximum static pressure)

ACOUSTICAL CHARACTERISTICS

44 dB (A) at 5 VDC
35 dB (SIL) at 5 VDC.

MECHANICAL CHARACTERISTICS

Venturi Block. The venturi block is made of die-cast aluminum alloy, and is specifically designed for lightweight, noiseless, efficient airflow and rapid heat dissipation.

Impeller. The impeller blades are molded of black, glass filled polyphenylene oxide and aerodynamically contoured for optimum pressure/air delivery performance.

Finish. This fan is protected by a moisture resistant black finish.

Terminals. The terminals are designed for use with No. 18 AWG wire or a quick disconnect plug and cord assembly, PAMOTOR Part No. 5505.

Bearing System. The dual sleeve broached sintered iron bearing system has a large oil felt reservoir between the sleeve bearings in addition to a thrust bearing for increased operational life in a horizontal plane installation.

Lubrication. Model 4105GX is lubricated within the bearing system by a special lubricant permitting extended operation at elevated ambient temperatures.

Weight. This fan weighs only 18 ounces.

MOTOR

Basic Design. The Model 4105GX has a brushless DC motor which is polarity protected.

Rotor Balance. The rotor is dynamically balanced to a maximum shift of the center of gravity of .0001" in each end plane.

Rotation. Clockwise, facing the air discharge.

Windings and Splices. The windings are treated with high-temperature varnish and are further insulated with individual sleeving.

Stator Protection. Stator laminations are treated with high-temperature varnish for protection against deterioration.

Insulation Resistance. The insulation resistance is ≥5 megohms measured at 500 VDC after 48 hours humidity storage.

Insulation Class. The insulation classification is 120°C.

Dielectric Strength. This fan will withstand 600 VAC RMS for one second at 20° C and 40% relative humidity.

Speed.

4.5 VDC	5 VDC	5.5 VDC
2550 RPM	2750 RPM	3000 RPM

Horizontal Airflow at Zero Static Pressure.

2300 RPM	2450 RPM	2700 RPM

Horizontal Airflow at Maximum Static Pressure

ELECTRICAL CHARACTERISTICS

Operating Voltage. The Model 4105GX is designed for operation at 4.5-5.5 VDC (5 VDC nominal).

Power Rating.

4.5 VDC	5 VDC	5.5 VDC
3.2 Watts	4.0 Watts	4.9 Watts

Input Power at Zero Static Pressure.

4.0 Watts	5.0 Watts	6.0 Watts

Input Power at Maximum Static Pressure

Input Current.

4.5 VDC	5 VDC	5.5 VDC
700 mA	775 mA	880 mA

Zero Static Pressure

800 mA	920 mA	1050 mA

Maximum Static Pressure

ENVIRONMENTAL CHARACTERISTICS

Operating Temperature Range. This fan is designed to operate over a temperature range of -10° C to +65° C.

QUALITY VERIFICATION

Life Expectancy. The life expectancy of this fan is 35,000 hours at 65°C.

Safety Codes. This fan conforms to UL, CSA, VDE and IEC standards.

Performance Data

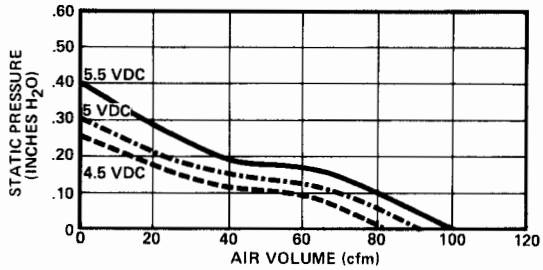

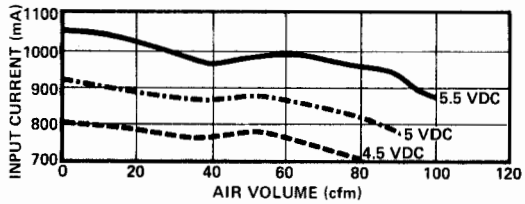

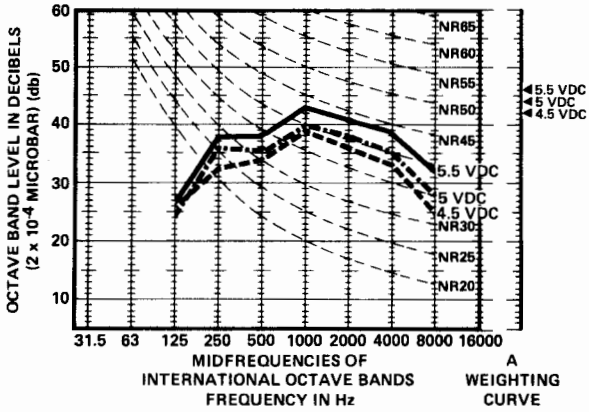

MOUNTING DIMENSIONS

Please see Drawing 2, page 136 of this catalog.

ACCESSORIES

PAMOTOR offers a full line of accessory items for its fans. Please refer to pages 140-141 of this catalog.

Model 4112X 4 11/16" All Metal 12VDC Axial Fan

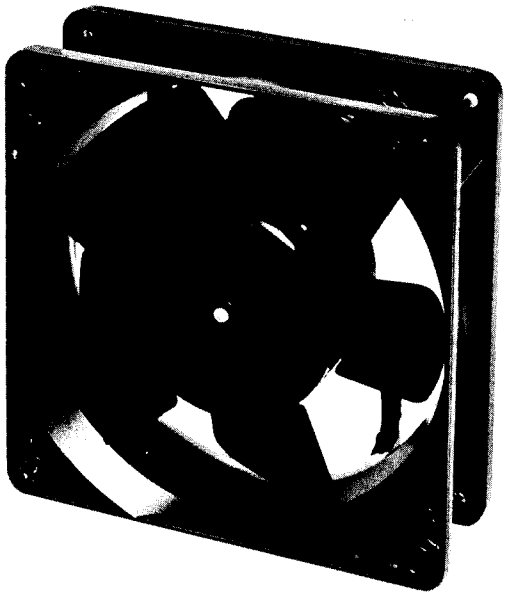

Dimensions
(in inches)

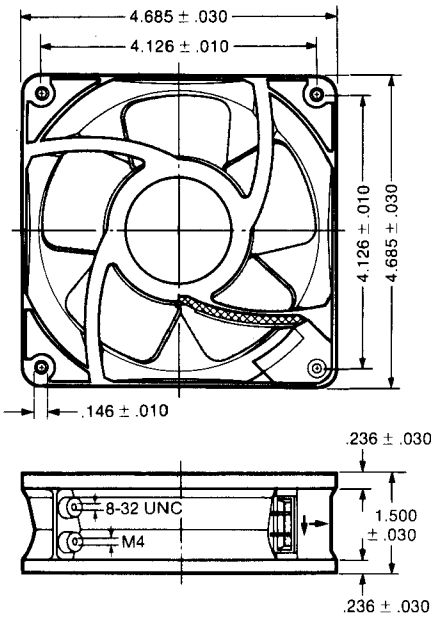

FEATURES:

- All-metal, brushless electronic motor, terminal block.
- Solid state integral electronics, no external inverter required.
- UL recognized.
- Conforms to CSA, IEC and VDE stds.
- Precision ball bearing system.
- Long operating life without maintenance.
- Low input power.
- Polarity protected.

GENERAL DESCRIPTION

This bulletin describes the electrical and mechanical parameters of the PAMOTOR Model 4112X DC miniature axial fan.

PERFORMANCE CHARACTERISTICS

Airflow. **14 VDC**
122 cfm at 0 Static Pressure
95 cfm at .10 inch H_2O
0 cfm at .34 inch H_2O
(maximum static pressure)

12 VDC
106 cfm at 0 Static Pressure
60 cfm at .10 inch H_2O
0 cfm at .27 inch H_2O
(maximum static pressure)

9.5 VDC
82 cfm at 0 Static Pressure
29 cfm at .10 inch H_2O
0 cfm at .17 inch H_2O
(maximum static pressure)

ACOUSTICAL CHARACTERISTICS

46 dB (A) at 12 VDC
38 dB (SIL) at 12 VDC

MECHANICAL CHARACTERISTICS

Venturi Block. The venturi block is made of die-cast aluminum alloy, and is specifically designed for light-weight, noiseless, efficient airflow and rapid heat dissipation.

Impeller. The impeller blades are all-metal, impulse-welded to the rotor and are aerodynamically contoured for optimum pressure/air delivery performance.

Finish. This fan is protected by a moisture resistant black finish.

Terminals. The terminals are designed for use with No. 18 AWG wire or a quick disconnect plug and cord assembly, PAMOTOR Part No. 5505. Two ground positions are also provided, one 8-32 UNC and one M4.

Bearing System. The precision ball bearing system ensures long life in a high-temperature environment, and provides maximum shock and vibration resistance.

Lubrication. This fan is lubricated within the sealed bearing system by a special lubricant permitting extended operation at elevated ambient temperatures and is guaranteed to -40°C..

Weight. Despite its all-metal construction, this fan weighs only 20 ounces.

MOTOR

Basic Design. The Model 4112X has a patented brushless DC motor which is polarity protected (U.S. Patent Number 3-873-897).

Rotor Balance. The rotor is dynamically balanced to a maximum shift of the center of gravity of .0001" in each end plane.

Rotation. Clockwise, facing the air discharge.

Windings and Splices. The windings are treated with high-temperature varnish and baked at 130°C. Splices are also treated with high-temperature varnish and are further insulated with individual sleeving.

Stator Protection. Stator laminations are treated with high-temperature varnish for protection against deterioration.

Insulation Resistance. The insulation resistance is ≥5 megohms measured at 500 VDC after 48 hours humidity storage.

Insulation Class. The insulation classification is 120°C.

Dielectric Strength. This fan will withstand 600 VAC RMS for one second at 20° C and 40% relative humidity.

Speed.

9.5 VDC	12 VDC	14 VDC
2350 RPM	2900 RPM	3200 RPM

Horizontal Airflow at Zero Static Pressure

2000 RPM	2500 RPM	2750 RPM

Horizontal Airflow at Maximum Static Pressure

ELECTRICAL CHARACTERISTICS

Operating Voltage. The Model 4112X is designed for operation at 9.5-14 VDC (12 VDC nominal).

Power Rating.

9.5 VDC	12 VDC	14 VDC
2.7 Watts	4.0 Watts	5.5 Watts

Input Power at Zero Static Pressure

2.9 Watts	5.3 Watts	7.2 Watts

Input Power at Maximum Static Pressure

Input Current.

9.5 VDC	12 VDC	14 VDC
225 mA	330 mA	390 mA

Zero Static Pressure

305 mA	440 mA	575 mA

Maximum Static Pressure

ENVIRONMENTAL CHARACTERISTICS

Operating Temperature Range. This fan is designed to operate over a temperature range of -30°C to +72°C.

QUALITY VERIFICATION

Life Expectancy. The life expectancy of this fan is 60,000 hours at 72°C.

Safety Codes. This fan has Underwriters Laboratories, Inc. Yellow Card Component Recognition No. E41168, and conforms to CSA, ICE and VDE standards.

Performance Data

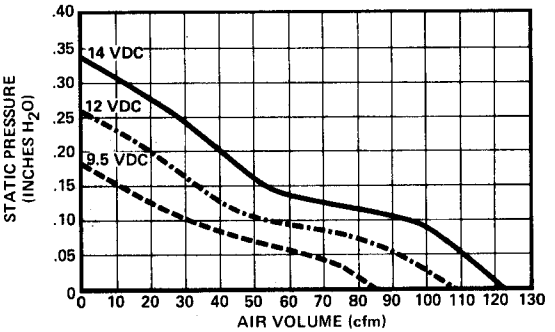

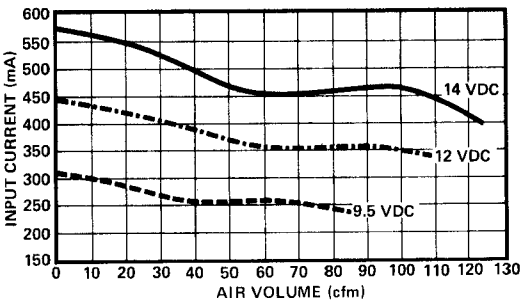

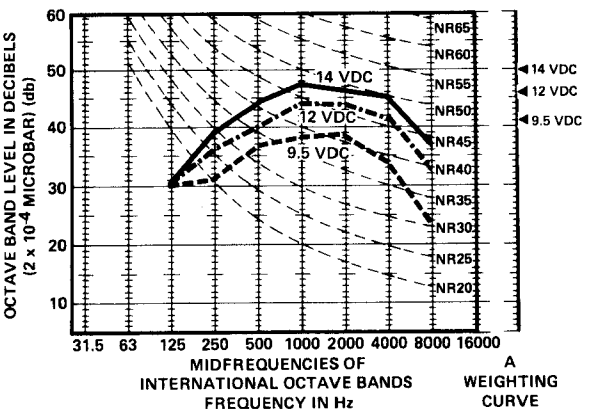

MOUNTING DIMENSIONS

Please see Drawing 2, page 136 of this catalog.

ACCESSORIES

PAMOTOR offers a full line of accessory items for its fans. Please refer to pages 140-141 of this catalog.

Model 4112GX
4 11/16" 12VDC
Axial Fan

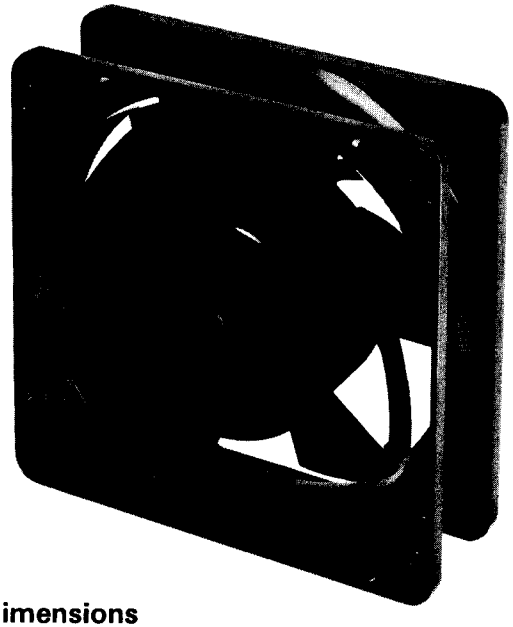

Dimensions
(in inches)

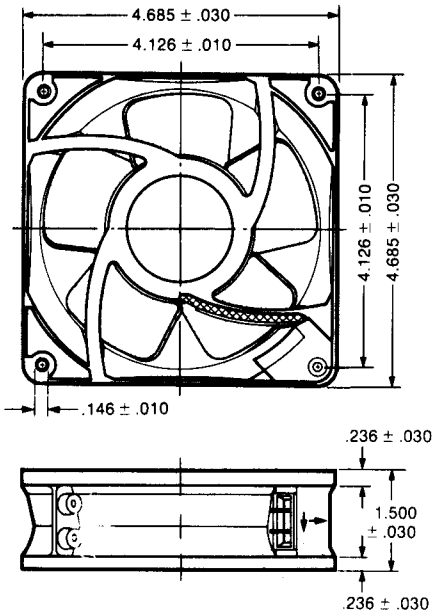

FEATURES:

- Brushless electronic motor.
- Terminal block.
- Solid state integral electronics.
- No external inverter required.
- Low input power.
- Polarity protected.
- Sleeve, broached sintered iron bearing system.
- Low EMI.
- UL recognized.

GENERAL DESCRIPTION

This bulletin describes the electrical and mechanical parameters of the PAMOTOR Model 4112GX miniature axial fan.

PERFORMANCE CHARACTERISTICS

Airflow. **16 VDC**
120 cfm at 0 Static Pressure
103 cfm at .10 inch H_2O
0 cfm at .52 inch H_2O
(maximum static pressure)

12 VDC
90 cfm at 0 Static Pressure
75 cfm at .10 inch H_2O
0 cfm at .33 inch H_2O
(maximum static pressure)

8 VDC
60 cfm at 0 Static Pressure
8 cfm at .10 inch H_2O
0 cfm at .13 inch H_2O
(maximum static pressure)

ACOUSTICAL CHARACTERISTICS

44 dB (A) at 12 VDC
34 dB (SIL) at 12 VDC

MECHANICAL CHARACTERISTICS

Venturi Block. The venturi block is made of die-cast aluminum alloy, and is specifically designed for lightweight, noiseless, efficient airflow and rapid heat dissipation.

Impeller. The impeller blades are molded of black, glass filled polyphenylene oxide and aerodynamically contoured for optimum pressure/air delivery performance.

Finish. This fan is protected by a moisture resistant black finish.

Terminals. The terminals are designed for use with No. 18 AWG wire or a quick disconnect plug and cord assembly, PAMOTOR Part No. 5505.

Bearing System. The dual sleeve broached sintered iron bearing system has a large oil felt reservoir between the sleeve bearings in addition to a thrust bearing for increased operational life in a horizontal plane installation.

Lubrication. Model 4112GX is lubricated within the bearing system by a special lubricant permitting extended operation at elevated ambient temperatures.

Weight. This fan weighs only 18 ounces.

MOTOR

Basic Design. The Model 4112GX has a brushless DC motor which is polarity protected.

Rotor Balance. The rotor is dynamically balanced to a maximum shift of the center of gravity of .0001" in each end plane.

Rotation. Clockwise, facing the air discharge.

Windings and Splices. The windings are treated with high-temperature varnish and are further insulated with individual sleeving.

Stator Protection. Stator laminations are treated with high-temperature varnish for protection against deterioration.

Insulation Resistance. The insulation resistance is ≥5 megohms measured at 500 VDC after 48 hours humidity storage.

Insulation Class. The insulation classification is 120°C.

Dielectric Strength. This fan will withstand 600 VAC RMS for one second at 20° C and 40% relative humidity.

Speed.

8 VDC	12 VDC	16 VDC
1800 RPM	2750 RPM	3550 RPM

Horizontal Airflow at Zero Static Pressure

1650 RPM	2500 RPM	3200 RPM

Horizontal Airflow at Maximum Static Pressure

ELECTRICAL CHARACTERISTICS

Operating Voltage. The Model 4112GX is designed for operation at 8-16 VDC (12 VDC nominal).

Power Rating.

8 VDC	12 VDC	16 VDC
1.7 Watts	4.3 Watts	8.0 Watts

Input Power at Zero Static Pressure

2.1 Watts	5.3 Watts	10.0 Watts

Input Power at Maximum Static Pressure

Input Current.

8 VDC	12 VDC	16 VDC
210 mA	360 mA	500 mA

Zero Static Pressure

270 mA	450 mA	640 mA

Maximum Static Pressure

ENVIRONMENTAL CHARACTERISTICS

Operating Temperature Range. This fan is designed to operate over a temperature range of -10° C to +65° C.

QUALITY VERIFICATION

Life Expectancy. The life expectancy of this fan is 35,000 hours at 65°C.

Safety Codes. This fan conforms to UL, CSA, VDE and IEC standards.

Performance Data

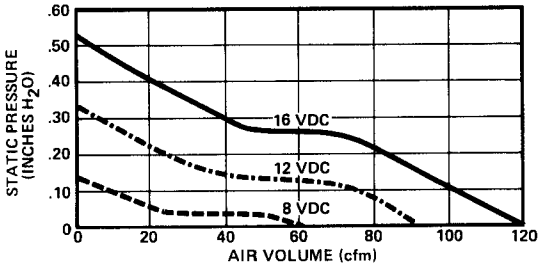

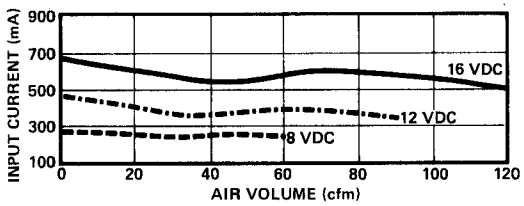

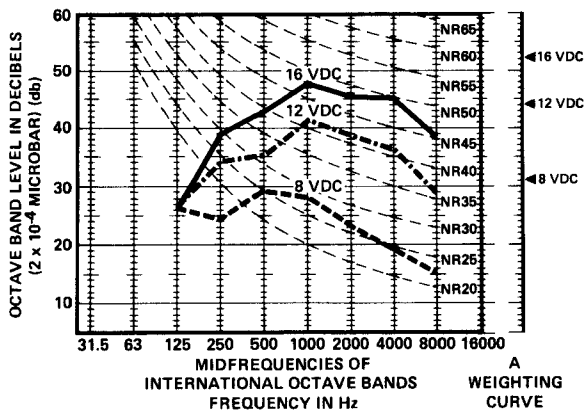

MOUNTING DIMENSIONS

Please see Drawing 2, page 136 of this catalog.

ACCESSORIES

PAMOTOR offers a full line of accessory items for its fans. Please refer to pages 140-141 of this catalog.

Model 4112KX
4 11/16" 12VDC
Axial Fan

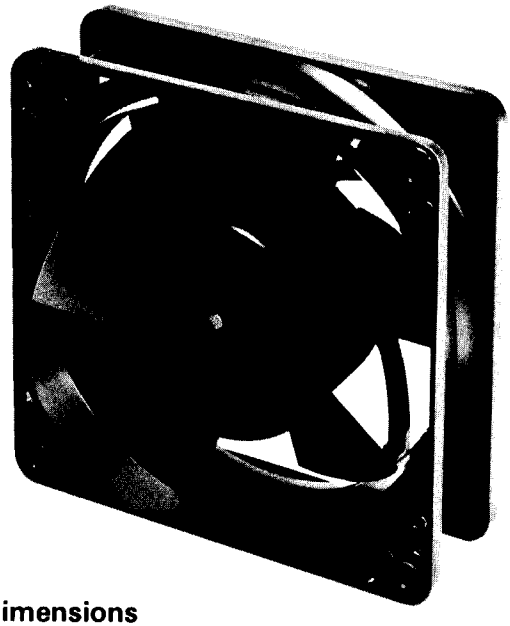

Dimensions
(in inches)

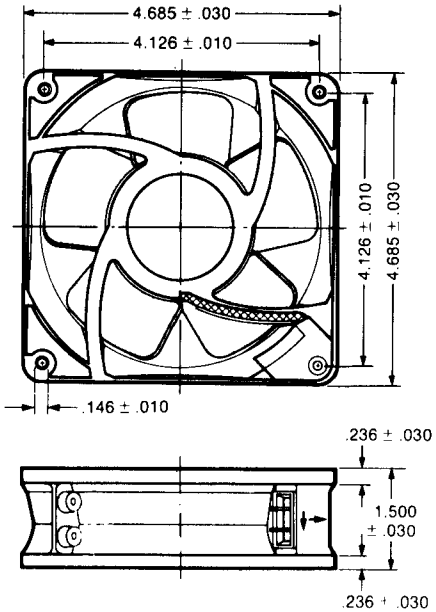

FEATURES:

- **Brushless electronic motor.**
- **Terminal block.**
- **Solid state integral electronics, no external inverter required.**
- **Low input power.**
- **Polarity protected.**
- **Precision ball bearing system.**
- **Low EMI.**
- **UL recognized.**

GENERAL DESCRIPTION

This bulletin describes the electrical and mechanical parameters of the PAMOTOR Model 4112KX miniature axial fan.

PERFORMANCE CHARACTERISTICS

Airflow. **14.5 VDC**
125 cfm at 0 Static Pressure
110 cfm at .10 inch H_2O
0 cfm at .47 inch H_2O
(maximum static pressure)

12 VDC
106 cfm at 0 Static Pressure
88 cfm at .10 inch H_2O
0 cfm at .39 inch H_2O
(maximum static pressure)

8 VDC
75 cfm at 0 Static Pressure
45 cfm at .10 inch H_2O
0 cfm at .20 inch H_2O
(maximum static pressure)

ACOUSTICAL CHARACTERISTICS

49 dB (A) at 12 VDC
40 dB (SIL) at 12 VDC

MECHANICAL CHARACTERISTICS

Venturi Block. The venturi block is made of die-cast aluminum alloy, and is specifically designed for light-weight, noiseless, efficient airflow and rapid heat dissipation.

Impeller. The impeller blades are molded of black, glass fiber reinforced plastic and aerodynamically contoured for optimum pressure/air delivery performance.

Finish. This fan is protected by a moisture resistant black finish.

Terminals. The terminals are designed for use with No. 18 AWG wire or a quick disconnect plug and cord assembly, PAMOTOR Part No. 5505.

Bearing System. The precision ball bearing system ensures long life in a high-temperature environment, and provides maximum shock and vibration resistance.

Lubrication. This fan is lubricated within the sealed bearing system by a special lubricant permitting extended operation at elevated ambient temperatures and is guaranteed to -40°C.

Weight. This fan weighs only 18 ounces.

MOTOR

Basic Design. The Model 4112KX has a brushless DC motor which is polarity protected.

Rotor Balance. The rotor is dynamically balanced to a maximum shift of the center of gravity of .0001" in each end plane.

Rotation. Clockwise, facing the air discharge.

Windings and Splices. The windings are treated with high-temperature varnish and are further insulated with individual sleeving.

Stator Protection. Stator laminations are treated with high-temperature varnish for protection against deterioration.

Insulation Resistance. The insulation resistance is ≥5 megohms measured at 500 VDC after 48 hours humidity storage.

Insulation Class. The insulation classification is 120°C.

Dielectric Strength. This fan will withstand 600 VAC RMS for one second at 20° C and 40% relative humidity.

Speed.

8 VDC	**12 VDC**	**14.5 VDC**
2150 RPM	3200 RPM	3750 RPM

Horizontal Airflow at Zero Static Pressure

1950 RPM	2800 RPM	3200 RPM

Horizontal Airflow at Maximum Static Pressure

ELECTRICAL CHARACTERISTICS

Operating Voltage. The Model 4112KX is designed for operation at 8-14.5 VDC (12 VDC nominal).

Power Rating.

8 VDC	**12 VDC**	**14.5 VDC**
2.3 Watts	6.0 Watts	9.0 Watts

Input Power at Zero Static Pressure

2.7 Watts	7.4 Watts	10.7 Watts

Input Power at Maximum Static Pressure

Input Current.

8 VDC	**12 VDC**	**14.5 VDC**
290 mA	500 mA	620 mA

Zero Static Pressure

340 mA	620 mA	740 mA

Maximum Static Pressure

ENVIRONMENTAL CHARACTERISTICS

Operating Temperature Range. This fan is designed to operate over a temperature range of -20°C to +65°C.

QUALITY VERIFICATION

Life Expectancy. The life expectancy of this fan is 60,000 hours at 65°C.

Safety Codes. This fan conforms to UL, CSA, VDE and IEC standards.

Peformance Data

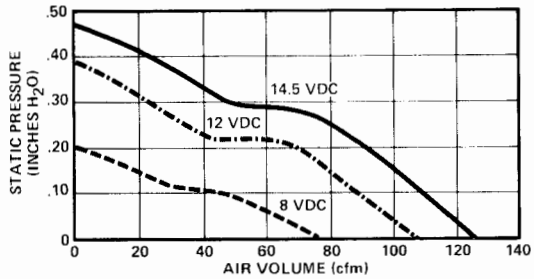

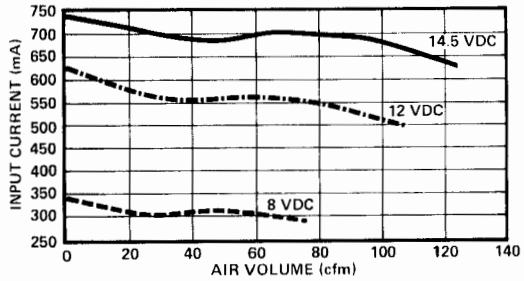

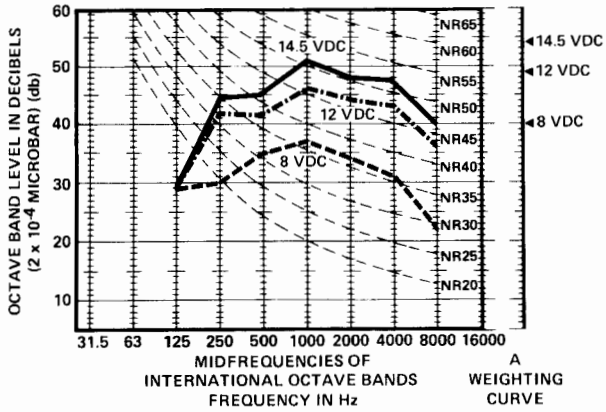

MOUNTING DIMENSIONS

Please see Drawing 2, page 136 of this catalog.

ACCESSORIES

PAMOTOR offers a full line of accessory items for its fans. Please refer to pages 140-141 of this catalog.

Model 4124F
4 11/16" All Metal
24 VDC Axial Fan

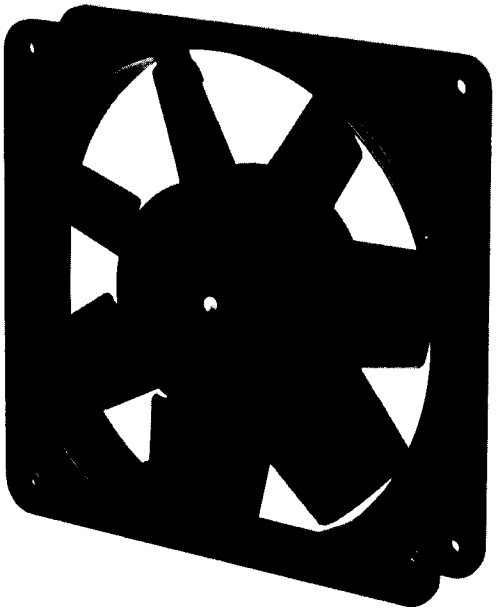

Dimensions
(in inches)

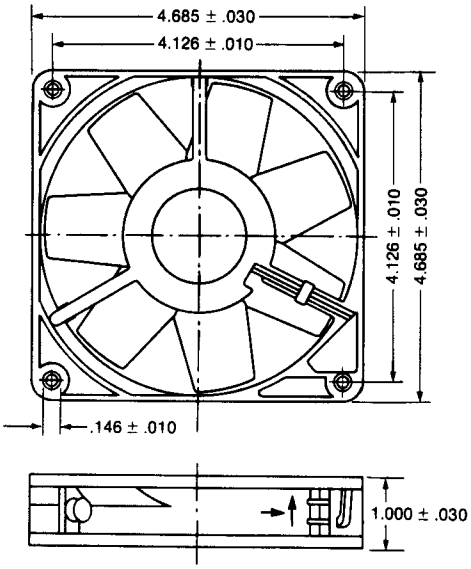

FEATURES:

- Extra-slim profile.
- All-metal, brushless electronic motor.
- Terminal block.
- Solid state integral electronics.
- No external inverter required.
- Polarity protected.
- Precision ball bearing system.
- Low EMI.

GENERAL DESCRIPTION

This bulletin describes the electrical and mechanical parameters of the PAMOTOR Model 4124F miniature axial fan.

PERFORMANCE CHARACTERISTICS

Airflow. **30 VDC**
120 cfm at 0 Static Pressure
94 cfm at .10 inch H_2O
0 cfm at .4 inch H_2O
(maximum static pressure)

24 VDC
100 cfm at 0 Static Pressure
48 cfm at .10 inch H_2O
0 cfm at .33 inch H_2O
(maximum static pressure)

18 VDC
80 cfm at 0 Static Pressure
32 cfm at .10 inch H_2O
0 cfm at .20 inch H_2O
(maximum static pressure)

ACOUSTICAL CHARACTERISTICS

48 dB (A) at 24 VDC
39 dB (SIL) at 24 VDC

MECHANICAL CHARACTERISTICS

Venturi Block. The venturi block is made of die-cast aluminum alloy, and is specifically designed for light-weight, noiseless, efficient airflow and rapid heat dissipation.

Impeller. The impeller blades are all-metal, impulse-welded to the rotor and are aerodynamically contoured for optimum pressure/air delivery performance.

Finish. This fan is protected by a moisture resistant black finish.

Terminals. The terminals are designed for use with No. 18 AWG wire or a quick disconnect plug and cord assembly, PAMOTOR Part No. 5505.

Bearing System. The precision ball bearing system ensures long life in a high-temperature environment, and provides maximum shock and vibration resistance.

Lubrication. This fan is lubricated within the sealed bearing system by a special lubricant permitting extended operation at elevated ambient temperatures.

Weight. This fan weighs only 12 ounces.

MOTOR

Basic Design. The Model 4124F has a brushless DC motor which is polarity protected.

Rotor Balance. The rotor is dynamically balanced to a maximum shift of the center of gravity of .0001" in each end plane.

Rotation. Counterclockwise, facing the air discharge.

Windings and Splices. The windings are treated with high-temperature varnish and are further insulated with individual sleeving.

Stator Protection. Stator laminations are treated with high-temperature varnish for protection against deterioration.

Insulation Resistance. The insulation resistance is ≥5 megohms measured at 500 VDC after 48 hours humidity storage.

Insulation Class. The insulation classification is 120°C.

Dielectric Strength. This fan will withstand 600 VAC RMS for one second at 20° C and 40% relative humidity.

Speed.

18 VDC	24 VDC	30 VDC
2250 RPM	2900 RPM	3400 RPM

Horizontal Airflow at Zero Static Pressure

2000 RPM	2550 RPM	2900 RPM

Horizontal Airflow at Maximum Static Pressure

ELECTRICAL CHARACTERISTICS

Operating Voltage. The Model 4124F is designed for operation at 18-30 VDC (24 VDC nominal).

Power Rating.

18 VDC	24 VDC	30 VDC
3.2 Watts	6 Watts	9.3 Watts

Input Power at Zero Static Pressure

4.0 Watts	7.0 Watts	11.0 Watts

Input Power at Maximum Static Pressure

Input Current.

18 VDC	24 VDC	30 VDC
175 mA	245 mA	310 mA

Zero Static Pressure

204 mA	278 mA	350 mA

Maximum Static Pressure

ENVIRONMENTAL CHARACTERISTICS

Operating Temperature Range. This fan is designed to operate over a temperature range of -20°C to +65°C.

QUALITY VERIFICATION

Life Expectancy. The life expectancy of this fan is 60,000 hours at 65°C.

Safety Codes. This fan conforms to UL, CSA, VDE and IEC standards.

Performance Data

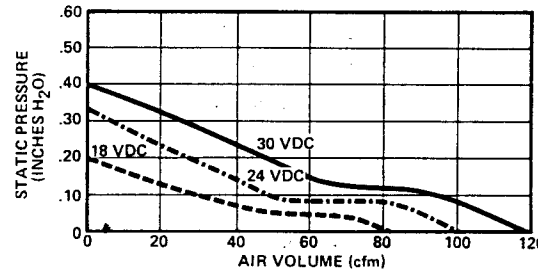

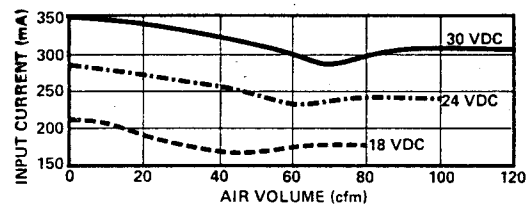

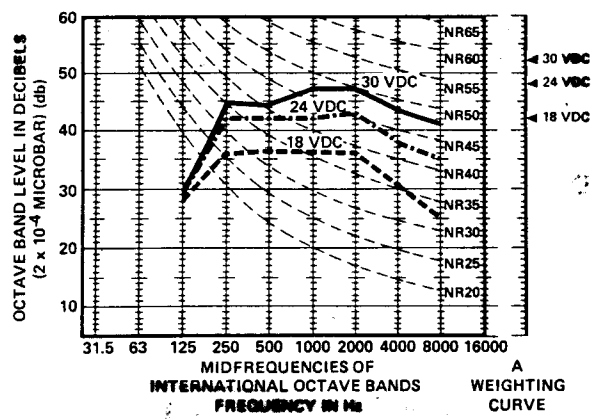

MOUNTING DIMENSIONS

Please see Drawing 2, page 136 of this catalog.

ACCESSORIES

PAMOTOR offers a full line of accessory items for its fans. Please refer to pages 140-141 of this catalog.

Model 4124X 4 11/16" All Metal 24VDC Axial Fan

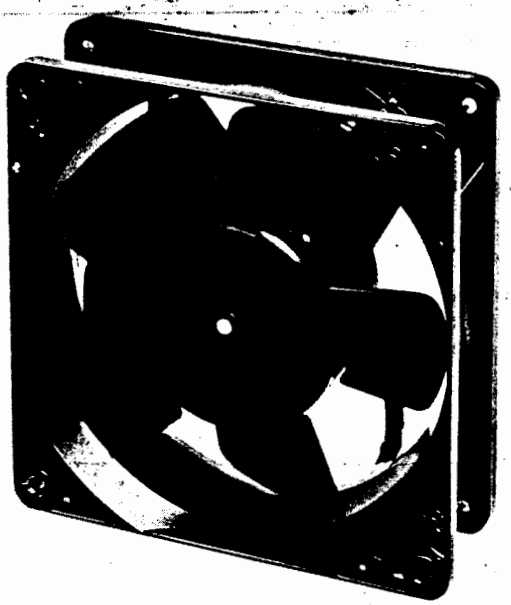

Dimensions
(in inches)

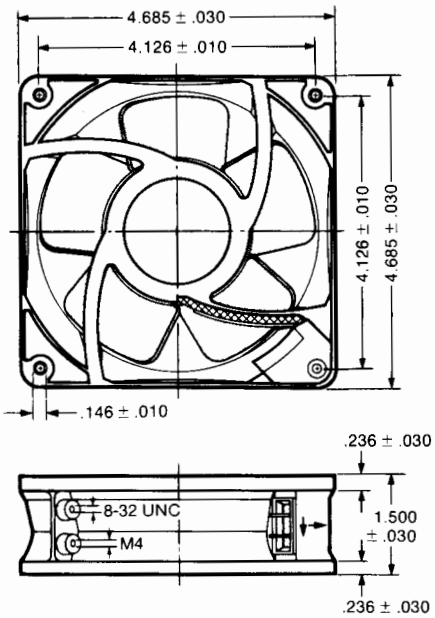

FEATURES:

- All-metal, brushless electronic motor, terminal block.
- Solid state integral electronics, no external inverter required.
- UL recognized.
- Conforms to CSA, IEC and VDE stds.
- Precision ball bearing system.
- Long operating life without maintenance.

GENERAL DESCRIPTION

This bulletin describes the electrical and mechanical parameters of the PAMOTOR Model 4124X DC miniature axial fan.

PERFORMANCE CHARACTERISTICS

Airflow. **28 VDC**
122 cfm at 0 Static Pressure
95 cfm at .10 inch H_2O
0 cfm at .34 inch H_2O
(maximum static pressure)

24 VDC
106 cfm at 0 Static Pressure
60 cfm at .10 inch H_2O
0 cfm at .27 inch H_2O
(maximum static pressure)

19 VDC
82 cfm at 0 Static Pressure
29 cfm at .10 inch H_2O
0 cfm at .17 inch H_2O
(maximum static pressure)

ACOUSTICAL CHARACTERISTICS

46 dB (A) at 24 VDC
38 dB (SIL) at 24 VDC

MECHANICAL CHARACTERISTICS

Venturi Block. The venturi block is made of die-cast aluminum alloy, and is specifically designed for lightweight, noiseless, efficient airflow and rapid heat dissipation.

Impeller. The impeller blades are all-metal, impulse-welded to the rotor and are aerodynamically contoured for optimum pressure/air delivery performance.

Finish. This fan is protected by a moisture resistant black finish.

Terminals. The terminals are designed for use with No. 18 AWG wire or a quick disconnect plug and cord assembly, PAMOTOR Part No. 5505. Two ground positions are also provided, one 8-32 UNC and one M4.

Bearing System. The precision ball bearing system ensures long life in a high-temperature environment, and provides maximum shock and vibration resistance.

Lubrication. This fan is lubricated within the sealed bearing system by a special lubricant permitting extended operation at elevated ambient temperatures and is guaranteed to -40°C..

Weight. Despite its all-metal construction, this fan weighs only 20 ounces.

MOTOR

Basic Design. The Model 4124X has a patented brushless DC motor which is polarity protected (U.S. Patent Number 3-873-897).

Rotor Balance. The rotor is dynamically balanced to a maximum shift of the center of gravity of .0001" in each end plane.

Rotation. Clockwise, facing the air discharge.

Windings and Splices. The windings are treated with high-temperature varnish and baked at 130°C. Splices are also treated with high-temperature varnish and are further insulated with individual sleeving.

Stator Protection. Stator laminations are treated with high-temperature varnish for protection against deterioration.

Insulation Resistance. The insulation resistance is ≥5 megohms measured at 500 VDC after 48 hours humidity storage.

Insulation Class. The insulation classification is 120°C.

Dielectric Strength. This fan will withstand 600 VAC RMS for one second at 20° C and 40% relative humidity.

Speed.

19 VDC	24 VDC	28 VDC
2350 RPM	2900 RPM	3200 RPM

Horizontal Airflow at Zero Static Pressure

2000 RPM	2550 RPM	2750 RPM

Horizontal Airflow at Maximum Static Pressure

ELECTRICAL CHARACTERISTICS

Operating Voltage. The Model 4124X is designed for operation at 19-28 VDC.

Power Rating.

19 VDC	24 VDC	28 VDC
2.3 Watts	4.1 Watts	6.2 Watts

Input Power at Zero Static Pressure

3.1 Watts	5.5 Watts	8.1 Watts

Input Power at Maximum Static Pressure

Input Current.

19 VDC	24 VDC	28 VDC
120 mA	170 mA	220 mA

Zero Static Pressure

165 mA	230 mA	290 mA

Maximum Static Pressure

ENVIRONMENTAL CHARACTERISTICS

Operating Temperature Range. This fan is designed to operate over a temperature range of -30°C to +72°C.

QUALITY VERIFICATION

Life Expectancy. The life expectancy of this fan is 60,000 hours at 72°C.

Safety Codes. This fan has Underwriters Laboratories, Inc. Yellow Card Component Recognition No. E41168, and conforms to CSA, IEC and VDE standards.

Performance Data

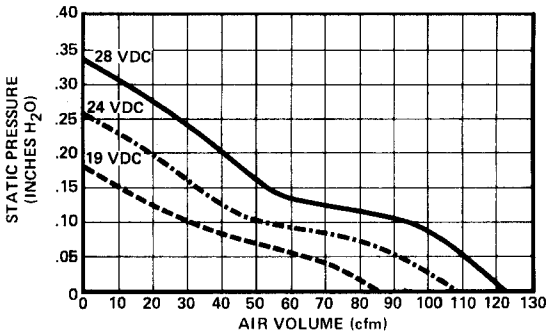

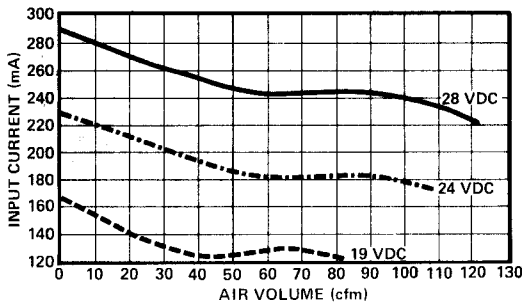

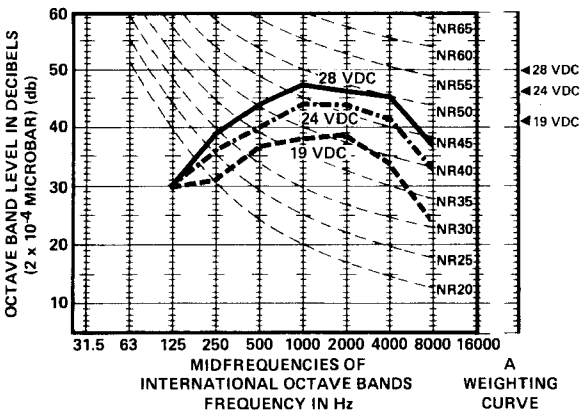

MOUNTING DIMENSIONS

Please see Drawing 2, page 136 of this catalog.

ACCESSORIES

PAMOTOR offers a full line of accessory items for its fans. Please refer to pages 140-141 of this catalog.

Model 4124GX
$4^{11}/_{16}$" 24VDC
Axial Fan

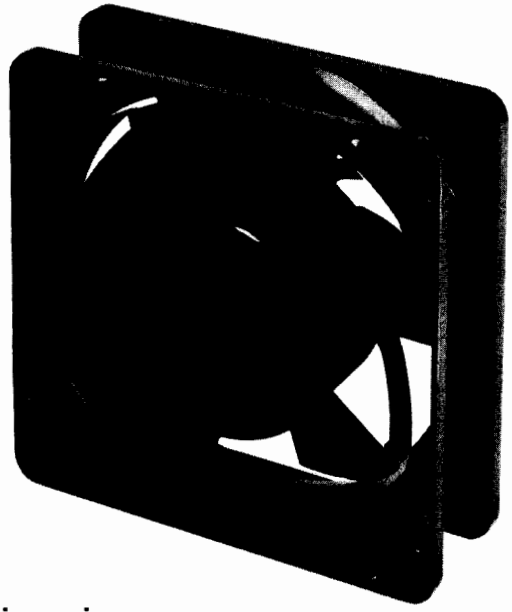

Dimensions
(in inches)

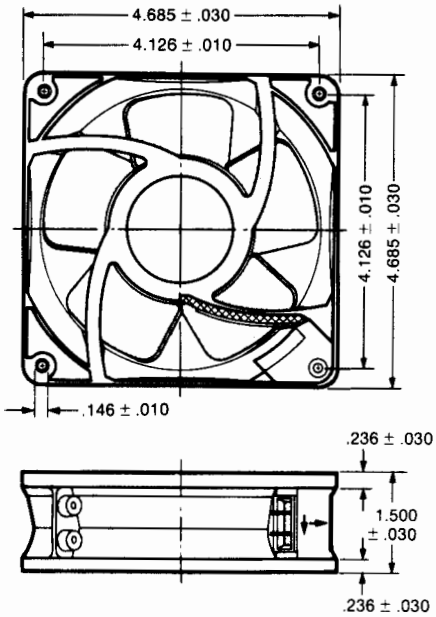

FEATURES:

- **Brushless electronic motor, terminal block.**
- **Solid state integral electronics, no external inverter required.**
- **Conforms to CSA, VDE and IEC stds.**
- **Sleeve, broached sintered iron bearing system.**
- **Low input power.**
- **Polarity protected.**
- **UL recognized.**

GENERAL DESCRIPTION

This bulletin describes the electrical and mechanical parameters of the PAMOTOR Model 4124GX DC miniature axial fan.

PERFORMANCE CHARACTERISTICS

Airflow. **30 VDC**
120 cfm at 0 Static Pressure
100 cfm at .10 inch H_2O
0 cfm at .50 inch H_2O
(maximum static pressure)

24 VDC
95 cfm at 0 Static Pressure
75 cfm at .10 inch H_2O
0 cfm at .35 inch H_2O
(maximum static pressure)

18 VDC
70 cfm at 0 Static Pressure
42 cfm at .10 inch H_2O
0 cfm at .20 inch H_2O
(maximum static pressure)

ACOUSTICAL CHARACTERISTICS

44 dB (A) at 24 VDC
34 dB (SIL) at 24 VDC

MECHANICAL CHARACTERISTICS

Venturi Block. The venturi block is made of die-cast aluminum alloy, and is specifically designed for lightweight, noiseless, efficient airflow and rapid heat dissipation.

Impeller. The impeller blades are made of black, glass-fiber reinforced plastic, press-fit to the rotor and aerodynamically contoured for optimum pressure/air delivery performance.

Finish. This fan is protected by a moisture resistant black finish.

Terminals. The terminals are designed for use with No. 18 AWG wire or a quick disconnect plug and cord assembly, PAMOTOR Part No. 5505.

Bearing System. The dual sleeve, broached sintered iron bearing system has a large felt reservoir between the sleeve bearings. It also has a thrust bearing for increased operational life in a horizontal plane installation.

Lubrication. This fan is lubricated within the sealed bearing system by a special lubricant permitting extended operation at elevated ambient temperatures.

Weight. This fan weighs only 18 ounces.

MOTOR

Basic Design. The Model 4124GX has a patented brushless DC motor which is polarity protected.

Rotor Balance. The rotor is dynamically balanced to a maximum shift of the center of gravity of .0001" in each end plane.

Rotation. Clockwise, facing the air discharge.

Windings and Splices. The windings are treated with high-temperature varnish and baked at 130°C. Splices are also treated with high-temperature varnish and are further insulated with individual sleeving.

Stator Protection. Stator laminations are treated with high-temperature varnish for protection against deterioration.

Insulation Resistance. The insulation resistance is ≥5 megohms measured at 500 VDC after 48 hours humidity storage.

Insulation Class. The insulation classification is 120°C.

Dielectric Strength. This fan will withstand 600 VAC RMS for one second at 20° C and 40% relative humidity.

Speed.

18 VDC	24 VDC	30 VDC
2250 RPM	2750 RPM	3450 RPM

Horizontal Airflow at Zero Static Pressure

2100 RPM	2550 RPM	3050 RPM

Horizontal Airflow at Maximum Static Pressure

ELECTRICAL CHARACTERISTICS

Operating Voltage. The Model 4124GX is designed for operation at 18-30 VDC (24 VDC nominal).

Power Rating.

18 VDC	24 VDC	30 VDC
2.2 Watts	4.3 Watts	6.6 Watts

Input Power at Zero Static Pressure

2.9 Watts	5.2 Watts	8.4 Watts

Input Power at Maximum Static Pressure

Input Current.

18 VDC	24 VDC	30 VDC
120 mA	180 mA	220 mA

Zero Static Pressure

160 mA	215 mA	280 mA

Maximum Static Pressure

ENVIRONMENTAL CHARACTERISTICS

Operating Temperature Range. This fan is designed to operate over a temperature range of -10°C to +65°C.

QUALITY VERIFICATION

Life Expectancy. The life expectancy of this fan is 35,000 hours at 65°C.

Safety Codes. The Model 4124GX conforms to UL, CSA, VDE and IEC standards.

Performance Data

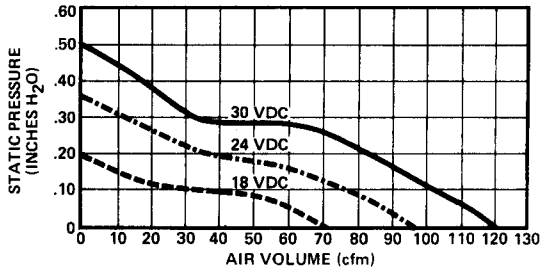

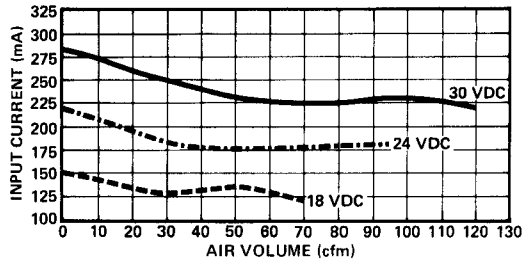

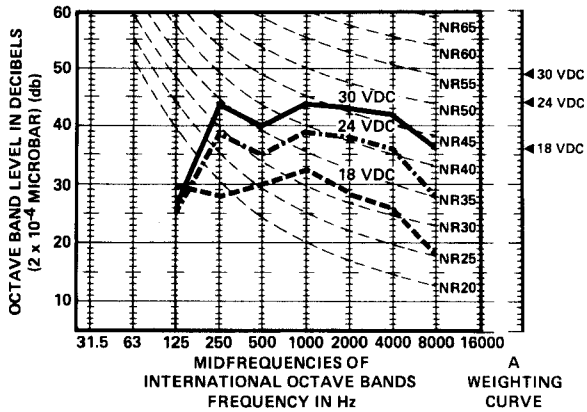

MOUNTING DIMENSIONS

Please see Drawing 2, page 136 of this catalog.

ACCESSORIES

PAMOTOR offers a full line of accessory items for its fans. Please refer to pages 140-141 of this catalog.

Model 4124KX
$4^{11}/_{16}$" 24VDC
Axial Fan

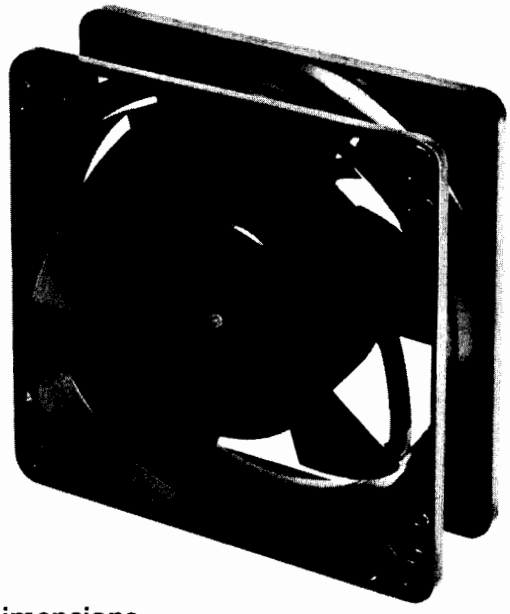

Dimensions
(in inches)

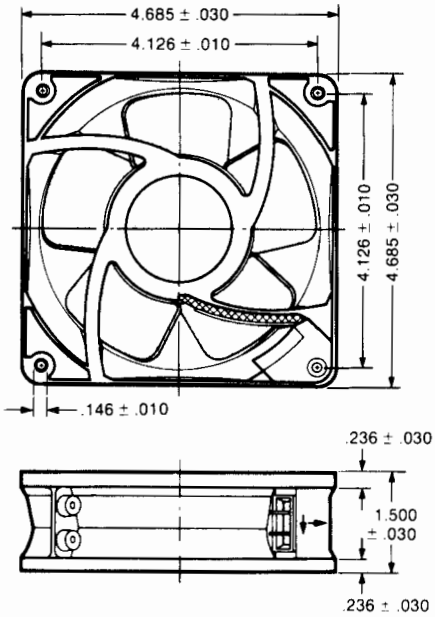

FEATURES:

- **Brushless electronic motor.**
- **Terminal block.**
- **Solid state integral electronics, no external inverter required.**
- **Conforms to CSA, VDE and IEC stds.**
- **Precision ball bearing system.**
- **Low input power.**
- **Polarity protected.**
- **UL recognized.**

GENERAL DESCRIPTION

This bulletin describes the electrical and mechanical parameters of the PAMOTOR **Model 4124KX** DC miniature axial fan.

PERFORMANCE CHARACTERISTICS

Airflow. **29 VDC**
125 cfm at 0 Static Pressure
110 cfm at .10 inch H_2O
0 cfm at .47 inch H_2O
(maximum static pressure)

24 VDC
106 cfm at 0 Static Pressure
88 cfm at .10 inch H_2O
0 cfm at .39 inch H_2O
(maximum static pressure)

18 VDC
90 cfm at 0 Static Pressure
63 cfm at .10 inch H_2O
0 cfm at .25 inch H_2O
(maximum static pressure)

ACOUSTICAL CHARACTERISTICS

49 dB (A) at 24 VDC
40 dB (SIL) at 24 VDC

MECHANICAL CHARACTERISTICS

Venturi Block. The venturi block is made of die-cast aluminum alloy, and is specifically designed for lightweight, noiseless, efficient airflow and rapid heat dissipation.

Impeller. The impeller blades are made of black, glass-fiber reinforced plastic, press-fit to the rotor and aerodynamically contoured for optimum pressure/air delivery performance.

Finish. This fan is protected by a moisture resistant black finish.

Terminals. The terminals are designed for use with No. 18 AWG wire or a quick disconnect plug and cord assembly, PAMOTOR Part No. 5505.

Bearing System. The precision ball bearing system ensures long life in a high-temperature environment, and provides maximum shock and vibration resistance.

Lubrication. This fan is lubricated within the sealed bearing system by a special lubricant permitting extended operation at elevated ambient temperatures and is guaranteed to -40°C.

Weight. This fan weighs only 18 ounces.

MOTOR

Basic Design. The Model 4124KX has a patented brushless DC motor which is polarity protected.

Rotor Balance. The rotor is dynamically balanced to a maximum shift of the center of gravity of .0001" in each end plane.

Rotation. Clockwise, facing the air discharge.

Windings and Splices. The windings are treated with high-temperature varnish and are further insulated with individual sleeving.

Stator Protection. Stator laminations are treated with high-temperature varnish for protection against deterioration.

Insulation Resistance. The insulation resistance is ≥5 megohms measured at 500 VDC after 48 hours humidity storage.

Insulation Class. The insulation classification is 120°C.

Dielectric Strength. This fan will withstand 600 VAC RMS for one second at 20° C and 40% relative humidity.

Speed.

18 VDC	24 VDC	29 VDC
2500 RPM	3200 RPM	3750 RPM

Horizontal Airflow at Zero Static Pressure

2250 RPM	2800 RPM	3200 RPM

Horizontal Airflow at Maximum Static Pressure

ELECTRICAL CHARACTERISTICS

Operating Voltage. The Model 4124KX is designed for operation at 18-29 VDC (24 VDC nominal).

Power Rating.

18 VDC	24 VDC	29 VDC
3.2 Watts	6.0 Watts	8.7 Watts

Input Power at Zero Static Pressure

3.8 Watts	7.2 Watts	10.9 Watts

Input Power at Maximum Static Pressure

Input Current.

18 VDC	24 VDC	29 VDC
180 mA	250 mA	300 mA

Zero Static Pressure

210 mA	300 mA	375 mA

Maximum Static Pressure

ENVIRONMENTAL CHARACTERISTICS

Operating Temperature Range. This fan is designed to operate over a temperature range of -20°C to +65°C.

QUALITY VERIFICATION

Life Expectancy. The life expectancy of this fan is 60,000 hours at 65°C.

Safety Codes. This fan conforms to UL, CSA, VDE and IEC standards.

Peformance Data

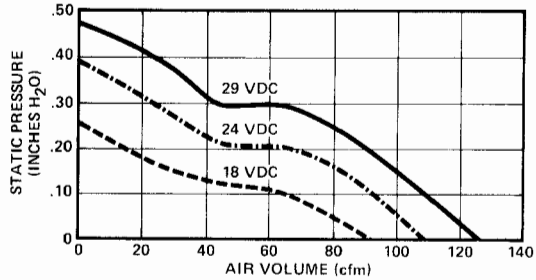

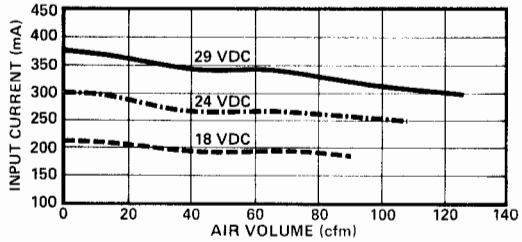

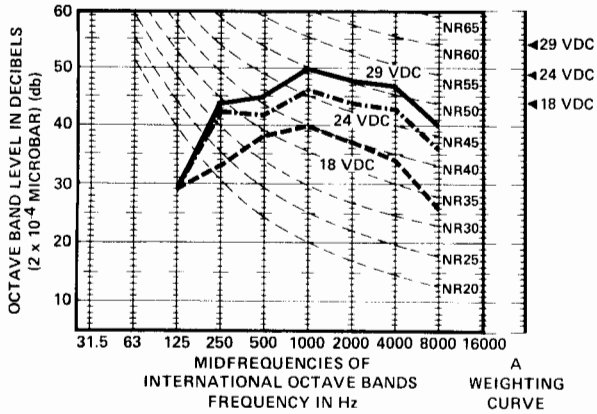

MOUNTING DIMENSIONS

Please see Drawing 2, page 136 of this catalog.

ACCESSORIES

PAMOTOR offers a full line of accessory items for its fans. Please refer to pages 140-141 of this catalog.

Model 4148X 4 11/16" All Metal 48VDC Axial Fan

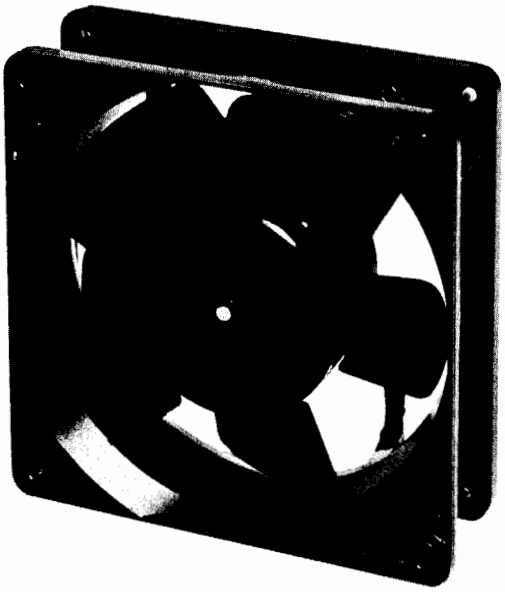

Dimensions
(in inches)

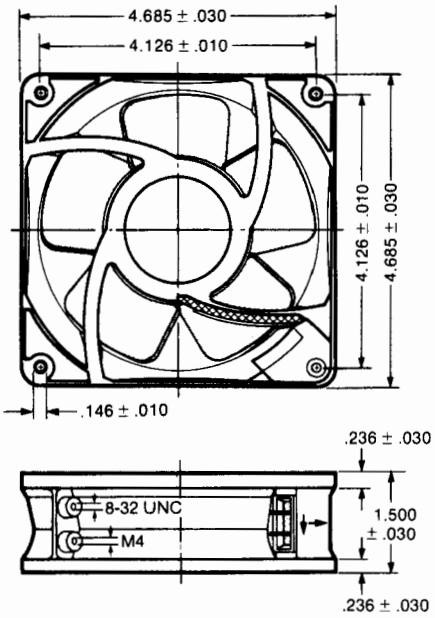

FEATURES:

- **All-metal, brushless electronic motor, terminal block.**
- **Solid state integral electronics, no external inverter required.**
- **UL recognized.**
- **Conforms to CSA, IEC and VDE stds.**
- **Precision ball bearing system.**
- **Long operating life without maintenance.**
- **Low input power.**
- **Polarity protected.**

GENERAL DESCRIPTION

This bulletin describes the electrical and mechanical parameters of the PAMOTOR Model 4148X DC miniature axial fan.

PERFORMANCE CHARACTERISTICS

Airflow. **56 VDC**
122 cfm at 0 Static Pressure
95 cfm at .10 inch H_2O
0 cfm at .34 inch H_2O
(maximum static pressure)

48 VDC
106 cfm at 0 Static Pressure
60 cfm at .10 inch H_2O
0 cfm at .27 inch H_2O
(maximum static pressure)

38 VDC
82 cfm at 0 Static Pressure
29 cfm at .10 inch H_2O
0 cfm at .17 inch H_2O
(maximum static pressure)

ACOUSTICAL CHARACTERISTICS

46 dB (A) at 48 VDC
38 dB (SIL) at 48 VDC

MECHANICAL CHARACTERISTICS

Venturi Block. The venturi block is made of die-cast aluminum alloy, and is specifically designed for lightweight, noiseless, efficient airflow and rapid heat dissipation.

Impeller. The impeller blades are all-metal, impulse-welded to the rotor and are aerodynamically contoured for optimum pressure/air delivery performance.

Finish. This fan is protected by a moisture resistant black finish.

Terminals. The terminals are designed for use with No. 18 AWG wire or a quick disconnect plug and cord assembly, PAMOTOR Part No. 5505. Two ground positions are also provided, one 8-32 UNC and one M4.

Bearing System. The precision ball bearing system ensures long life in a high-temperature environment, and provides maximum shock and vibration resistance.

Lubrication. This fan is lubricated within the sealed bearing system by a special lubricant permitting extended operation at elevated ambient temperatures and is guaranteed to -40°C..

Weight. Despite its all-metal construction, this fan weighs only 20 ounces.

MOTOR

Basic Design. The Model 4148X has a patented brushless DC motor which is polarity protected (U.S. Patent Number 3-873-897).

Rotor Balance. The rotor is dynamically balanced to a maximum shift of the center of gravity of .0001" in each end plane.

Rotation. Clockwise, facing the air discharge.

Windings and Splices. The windings are treated with high-temperature varnish and baked at 130°C. Splices are also treated with high-temperature varnish and are further insulated with individual sleeving.

Stator Protection. Stator laminations are treated with high-temperature varnish for protection against deterioration.

Insulation Resistance. The insulation resistance is ≥5 megohms measured at 500 VDC after 48 hours humidity storage.

Insulation Class. The insulation classification is 120°C.

Dielectric Strength. This fan will withstand 660 VAC RMS for one second at 20° C and 40% relative humidity.

Speed.

38 VDC	48 VDC	56 VDC
2250 RPM	2900 RPM	3150 RPM

Horizontal Airflow at Zero Static Pressure

2000 RPM	2550 RPM	2700 RPM

Horizontal Airflow at Maximum Static Pressure

ELECTRICAL CHARACTERISTICS

Operating Voltage. The Model 4148X is designed for operation at 38-56 VDC (48 VDC nominal).

Power Rating.

38 VDC	48 VDC	56 VDC
2.3 Watts	4.1 Watts	6.2 Watts

Input Power at Zero Static Pressure

3.2 Watts	5.5 Watts	8.1 Watts

Input Power at Maximum Static Pressure

Input Current.

38 VDC	48 VDC	56 VDC
60 mA	85 mA	110 mA

Zero Static Pressure

85 mA	115 mA	145 mA

Maximum Static Pressure

ENVIRONMENTAL CHARACTERISTICS

Operating Temperature Range. This fan is designed to operate over a temperature range of -30°C to +72° C.

QUALITY VERIFICATION

Life Expectancy. The life expectancy of this fan is 60,000 hours at 72° C.

Safety Codes. This fan has Underwriters Laboratories, Inc. Yellow Card Component Recognition No. E41168, and conforms to CSA, IEC and VDE standards.

Performance Data

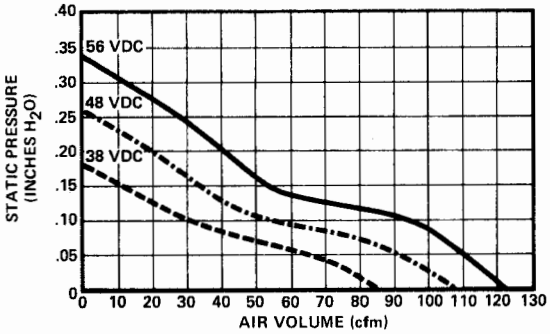

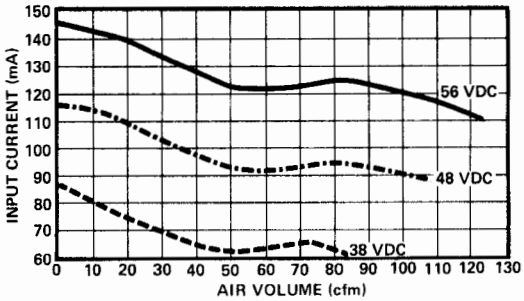

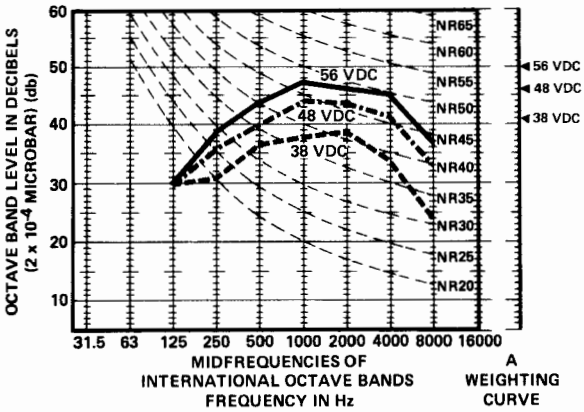

MOUNTING DIMENSIONS

Please see Drawing 2, page 136 of this catalog.

ACCESSORIES

PAMOTOR offers a full line of accessory items for its fans. Please refer to pages 140-141 of this catalog.

Model 6124
6¾" 24 VDC
Axial Fan

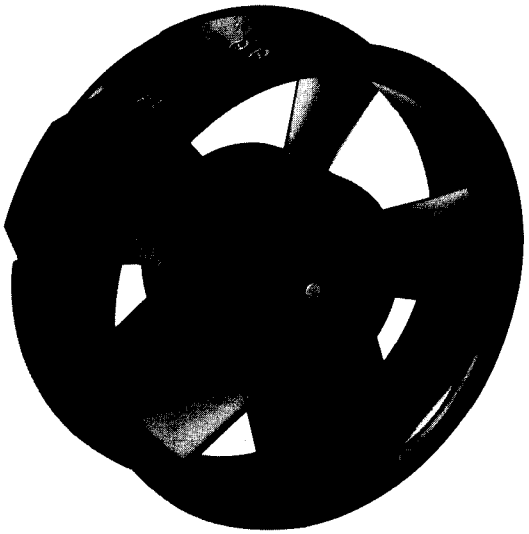

Dimensions
(in inches)

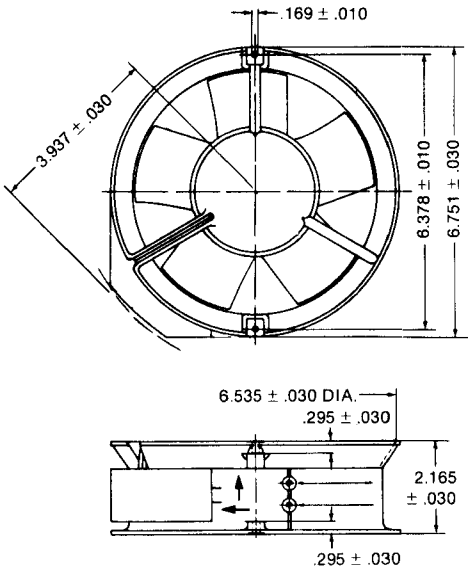

FEATURES:

- **Brushless electronic motor.**
- **Solid state integral electronics.**
- **No external inverter required.**
- **Precision ball bearing system.**
- **Conforms to CSA, VDE and IEC stds.**
- **Long operating life without maintenance.**
- **Terminal cover, -2 flat pins.**
- **UL recognized.**

GENERAL DESCRIPTION

This bulletin describes the electrical and mechanical parameters of the PAMOTOR Model 6124 DC miniature axial fan.

PERFORMANCE CHARACTERISTICS

Airflow. **32 VDC**
250 cfm at 0 Static Pressure
230 cfm at .10 inch H_2O
0 cfm at .72 inch H_2O
(maximum static pressure)

24 VDC
210 cfm at 0 Static Pressure
195 cfm at .10 inch H_2O
0 cfm at .48 inch H_2O
(maximum static pressure)

16 VDC
150 cfm at 0 Static Pressure
120 cfm at .10 inch H_2O
0 cfm at .25 inch H_2O
(maximum static pressure)

ACOUSTICAL CHARACTERISTICS

50 dB (A) at 24 VDC
38 dB (SIL) at 24 VDC

MECHANICAL CHARACTERISTICS

Venturi Block. The venturi block is made of die-cast aluminum alloy, and is specifically designed for lightweight, noiseless, efficient airflow and rapid heat dissipation.

Impeller. The impeller blades are molded of black, glass filled polyphenylene oxide and aerodynamically contoured for optimum pressure/air delivery performance.

Finish. This fan is protected by a moisture resistant black finish.

Terminals. The terminals are designed for use with No. 18 AWG wire or a quick disconnect plug and cord assembly, PAMOTOR Part No. 5505.

Bearing System. The precision ball bearing system ensures long life in a high-temperature environment, and provides maximum shock and vibration resistance.

Lubrication. This fan is lubricated within the sealed bearing system by a special lubricant permitting extended operation at elevated ambient temperatures and is guaranteed to -40°C.

Weight. This fan weighs only 38 ounces.

MOTOR

Basic Design. The Model 6124 has a brushless DC motor which is polarity protected.

Rotor Balance. The rotor is dynamically balanced to a maximum shift of the center of gravity of .0001" in each end plane.

Rotation. Clockwise, facing the air discharge.

Windings and Splices. The windings are treated with high-temperature varnish and baked at 130°C. Splices are also treated with high-temperature varnish and are further insulated with individual sleeving.

Stator Protection. Stator laminations are treated with high-temperature varnish for protection against deterioration.

Insulation Resistance. The insulation resistance is ≥5 megohms measured at 500 VDC after 48 hours humidity storage.

Insulation Class. The insulation classification is 120°C.

Dielectric Strength. This fan will withstand 600 VAC RMS for one second at 20° C and 40% relative humidity.

Speed.

16 VDC	24 VDC	32 VDC
1900 RPM	2850 RPM	3300 RPM

Horizontal Airflow at Zero Static Pressure

1780 RPM	2670 RPM	2900 RPM

Horizontal Airflow at Maximum Static Pressure

ELECTRICAL CHARACTERISTICS

Operating Voltage. The Model 6124 is designed for operation at 16-32 VDC (24 VDC nominal).

Power Rating.

16 VDC	24 VDC	32 VDC
4.5 Watts	11 Watts	15.5 Watts

Input Power at Zero Static Pressure

5.5 Watts	12 Watts	16.5 Watts

Input Power at Maximum Static Pressure

Input Current.

16 VDC	24 VDC	32 VDC
300 mA	450 mA	515 mA

Zero Static Pressure

365 mA	500 mA	550 mA

Maximum Static Pressure

ENVIRONMENTAL CHARACTERISTICS

Operating Temperature Range. This fan is designed to operate over a temperature range of -20° C to +72° C.

QUALITY VERIFICATION

Life Expectancy. The life expectancy of this fan is 60,000 hours at 72°C.

Safety Codes. This fan conforms to UL, CSA, VDE and IEC standards.

Performance Data

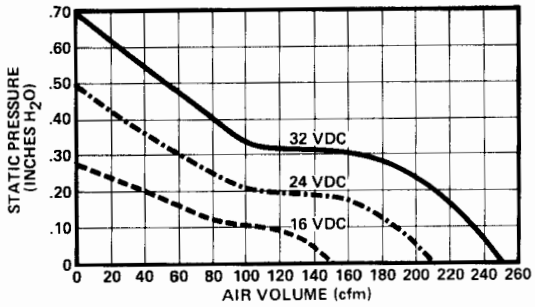

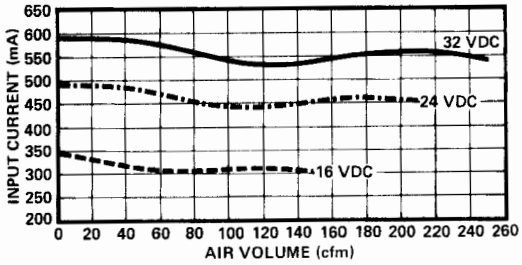

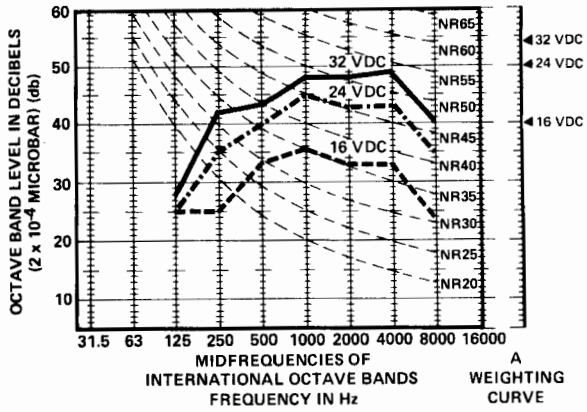

MOUNTING DIMENSIONS

Please see Drawing 5, page 137 of this catalog.

ACCESSORIES

PAMOTOR offers a full line of accessory items for its fans. Please refer to pages 140-141 of this catalog.

Model 6148
6¾" 48 VDC
Axial Fan

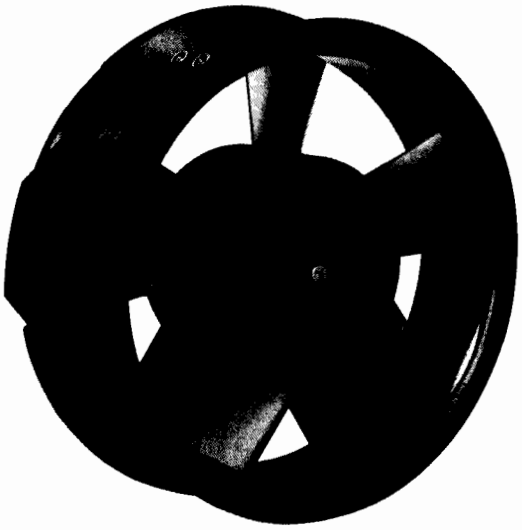

Dimensions
(in inches)

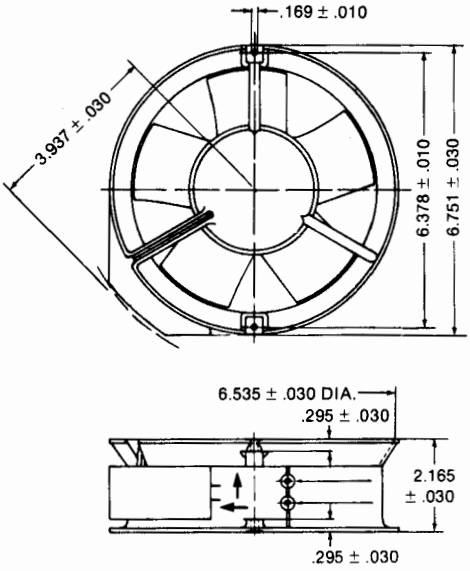

FEATURES:

- **Brushless electronic motor.**
- **Solid state integral electronics.**
- **No external inverter**
- **Precision ball bearing system.**
- **Conforms to CSA, VDE and IEC stds.**
- **Long operating life without maintenance.**
- **Terminal cover, -2 flat pins.**
- **UL recognized.**

GENERAL DESCRIPTION

This bulletin describes the electrical and mechanical parameters of the PAMOTOR Model 6148 DC miniature axial fan.

PERFORMANCE CHARACTERISTICS

Airflow. **60 VDC**
250 cfm at 0 Static Pressure
230 cfm at .10 inch H_2O
0 cfm at .72 inch H_2O
(maximum static pressure)

48 VDC
210 cfm at 0 Static Pressure
195 cfm at .10 inch H_2O
0 cfm at .45 inch H_2O
(maximum static pressure)

32 VDC
150 cfm at 0 Static Pressure
130 cfm at .10 inch H_2O
0 cfm at .25 inch H_2O
(maximum static pressure)

ACOUSTICAL CHARACTERISTICS

50 dB (A) at 48 VDC
38 dB (SIL) at 48 VDC

MECHANICAL CHARACTERISTICS

Venturi Block. The venturi block is made of die-cast aluminum alloy, and is specifically designed for lightweight, noiseless, efficient airflow and rapid heat dissipation.

Impeller. The impeller blades are molded of black, glass filled polyphenylene oxide and aerodynamically contoured for optimum pressure/air delivery performance.

Finish. This fan is protected by a moisture resistant black finish.

Terminals. The terminals are designed for use with No. 18 AWG wire or a quick disconnect plug and cord assembly, PAMOTOR Part No. 5505.

Bearing System. The precision ball bearing system ensures long life in a high-temperature environment, and provides maximum shock and vibration resistance.

Lubrication. This fan is lubricated within the sealed bearing system by a special lubricant permitting extended operation at elevated ambient temperatures and is guaranteed to -40°C.

Weight. This fan weighs only 38 ounces.

MOTOR

Basic Design. The Model 6148 has a brushless DC motor which is polarity protected.

Rotor Balance. The rotor is dynamically balanced to a maximum shift of the center of gravity of .0001" in each end plane.

Rotation. Clockwise, facing the air discharge.

Windings and Splices. The windings are treated with high-temperature varnish and baked at 130°C. Splices are also treated with high-temperature varnish and are further insulated with individual sleeving.

Stator Protection. Stator laminations are treated with high-temperature varnish for protection against deterioration.

Insulation Resistance. The insulation resistance is ≥5 megohms measured at 500 VDC after 48 hours humidity storage.

Insulation Class. The insulation classification is 120°C.

Dielectric Strength. This fan will withstand 660 VAC RMS for one second at 20° C and 40% relative humidity.

Speed.

32 VDC	48 VDC	60 VDC
1920 RPM	2800 RPM	3300 RPM
Horizontal Airflow at Zero Static Pressure		
1830 RPM	2650 RPM	3000 RPM
Horizontal Airflow at Maximum Static Pressure		

ELECTRICAL CHARACTERISTICS

Operating Voltage. The Model 6148 is designed for operation at 32-60 VDC (48 VDC nominal).

Power Rating

32 VDC	48 VDC	60 VDC
4.5 Watts	10.5 Watts	14.5 Watts
Input Power at Zero Static Pressure		
5.3 Watts	11.5 Watts	16.5 Watts
Input Power at Maximum Static Pressure		

Input Current.

32 VDC	48 VDC	60 VDC
150 mA	205 mA	245 mA
Zero Static Pressure		
175 mA	250 mA	285 mA
Maximum Static Pressure		

ENVIRONMENTAL CHARACTERISTICS

Operating Temperature Range. This fan is designed to operate over a temperature range of -20° C to +72° C.

QUALITY VERIFICATION

Life Expectancy. The life expectancy of this fan is 60,000 hours at 72°C.

Safety Codes. This fan conforms to UL, CSA, VDE and IEC standards.

Performance Data

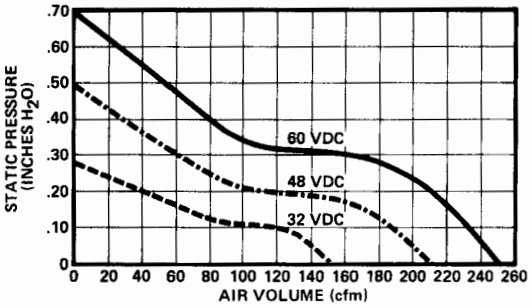

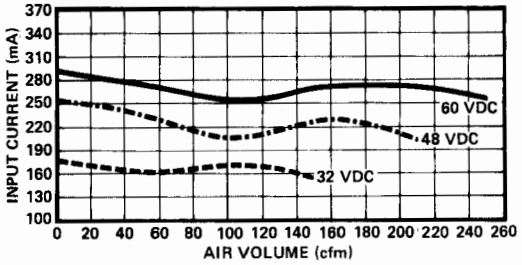

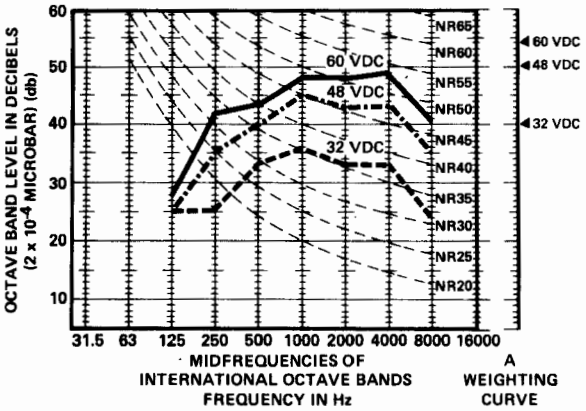

MOUNTING DIMENSIONS

Please see Drawing 5, page 137 of this catalog.

ACCESSORIES

PAMOTOR offers a full line of accessory items for its fans. Please refer to pages 140-141 of this catalog.

Model 8105G 3⅛" All Metal 5VDC Axial Fan

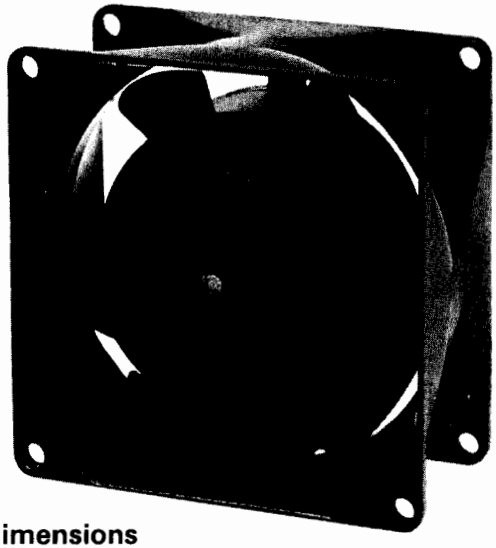

Dimensions
(in inches)

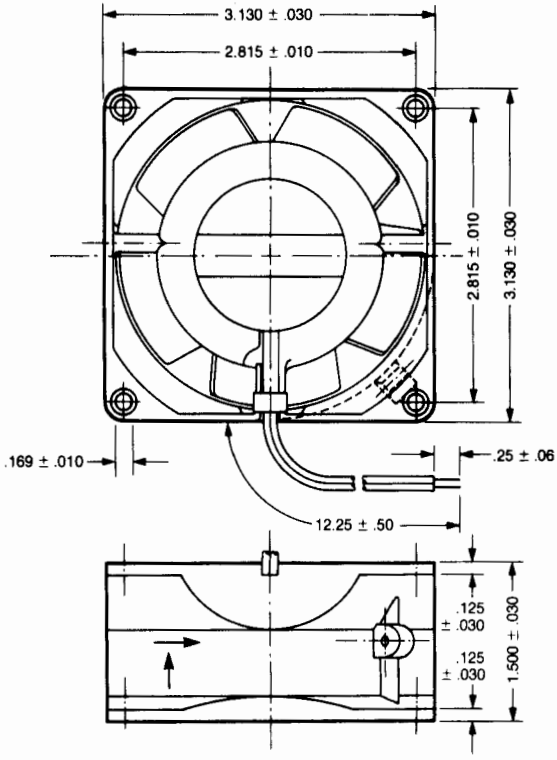

FEATURES:

- **All-metal, brushless electronic motor.**
- **Solid state integral electronics.**
- **No external inverter required.**
- **Low input power.**
- **Sleeve, broached sintered iron bearing system.**
- **Low EMI.**

GENERAL DESCRIPTION

This bulletin describes the electrical and mechanical parameters of the PAMOTOR Model 8105G miniature axial fan.

PERFORMANCE CHARACTERISTICS

Airflow. **5.5 VDC**
40 cfm at 0 Static Pressure
25 cfm at .10 inch H_2O
0 cfm at .30 inch H_2O
(maximum static pressure)

5 VDC
36 cfm at 0 Static Pressure
15 cfm at .10 inch H_2O
0 cfm at .24 inch H_2O
(maximum static pressure)

4.5 VDC
31 cfm at 0 Static Pressure
12 cfm at .10 inch H_2O
0 cfm at .20 inch H_2O
(maximum static pressure)

ACOUSTICAL CHARACTERISTICS

37 dB (A) at 5 VDC
29 dB (SIL) at 5 VDC

MECHANICAL CHARACTERISTICS

Venturi Block. The venturi block is made of die-cast aluminum alloy, and is specifically designed for lightweight, noiseless, efficient airflow and rapid heat dissipation.

Impeller. The impeller blades are all-metal, impulse-welded to the rotor and are aerodynamically contoured for optimum pressure/air delivery performance.

Finish. This fan is protected by a moisture resistant black finish.

Terminals. Two leads of No. 22 AWG insulated wire. Red identifies the positive lead.

Bearing System. The dual sleeve broached sintered iron bearing system has a large oil felt reservoir between the sleeve bearings in addition to a thrust bearing for increased operational life in a horizontal plane installation.

Lubrication. Model 8105G is lubricated within the bearing system by a special lubricant permitting extended operation at elevated ambient temperatures.

Weight. This fan weighs only 18 ounces.

MOTOR

Basic Design. The Model 8105G has a brushless DC motor which is polarity protected.

Rotor Balance. The rotor is dynamically balanced to a maximum shift of the center of gravity of .0001" in each end plane.

Rotation. Counterclockwise, facing the air discharge.

Windings and Splices. The windings are treated with high-temperature varnish and are further insulated with individual sleeving.

Stator Protection. Stator laminations are treated with high-temperature varnish for protection against deterioration.

Insulation Resistance. The insulation resistance is ≥5 megohms measured at 500 VDC after 48 hours humidity storage.

Insulation Class. The insulation classification is 120°C.

Dielectric Strength. This fan will withstand 600 VAC RMS for one second at 20° C and 40% relative humidity.

Speed.

4.5 VDC	5 VDC	5.5 VDC
3100 RPM	3450 RPM	3750 RPM

Horizontal Airflow at Zero Static Pressure

3050 RPM	3380 RPM	3650 RPM

Horizontal Airflow at Maximum Static Pressure

ELECTRICAL CHARACTERISTICS

Operating Voltage. The Model 8105G is designed for operation at 4.5-5.5 VDC (5 VDC nominal).

Power Rating.

4.5 VDC	5 VDC	5.5 VDC
2 Watts	2.5 Watts	2.9 Watts

Input Power at Zero Static Pressure

2.7 Watts	3.2 Watts	3.7 Watts

Input Power at Maximum Static Pressure

Input Current.

4.5 VDC	5 VDC	5.5 VDC
435 mA	480 mA	520 mA

Zero Static Pressure

455 mA	500 mA	545 mA

Maximum Static Pressure

ENVIRONMENTAL CHARACTERISTICS

Operating Temperature Range. This fan is designed to operate over a temperature range of -10° C to +65° C.

QUALITY VERIFICATION

Life Expectancy. The life expectancy of this fan is 35,000 hours at 65°C.

Safety Codes. This fan conforms to UL, CSA, VDE and IEC standards.

Performance Data

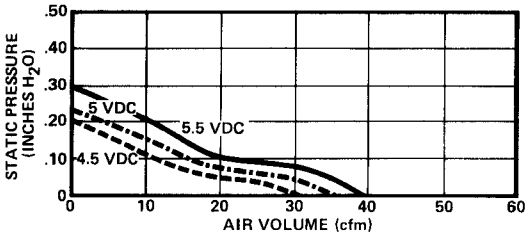

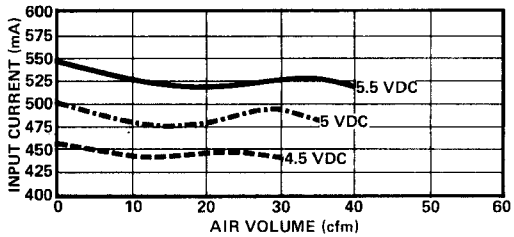

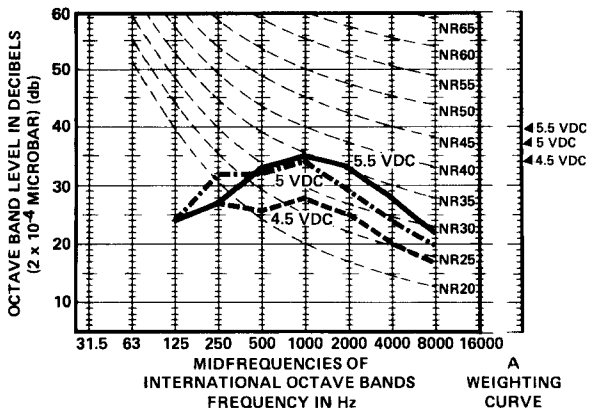

MOUNTING DIMENSIONS

Please see Drawing 3, page 136 of this catalog.

ACCESSORIES

PAMOTOR offers a full line of accessory items for its fans. Please refer to pages 140-141 of this catalog.

Model 8112
3⅛" All Metal
12VDC Axial Fan

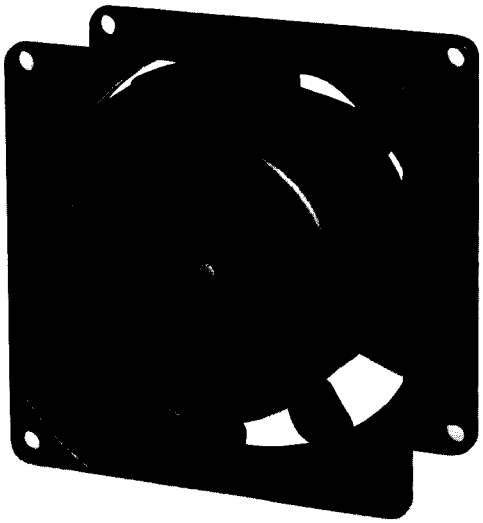

Dimensions
(in inches)

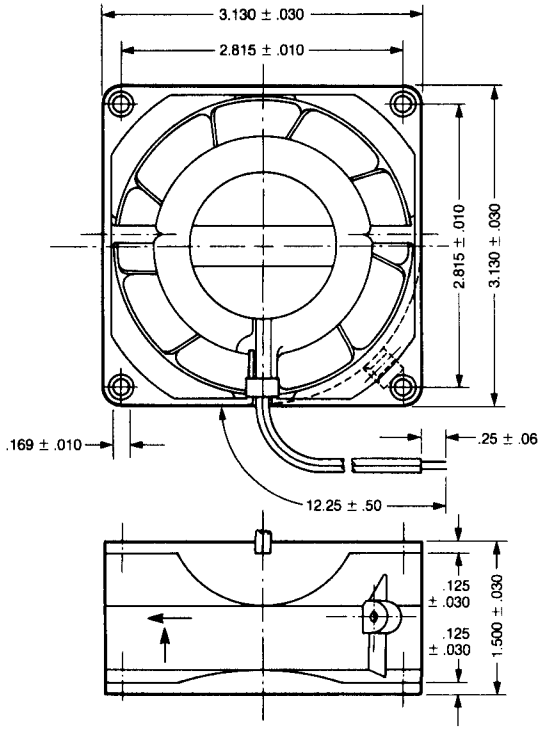

FEATURES:

- **All-metal, brushless electronic motor.**
- **Solid state integral electronics, no external inverter required.**
- **UL recognized.**
- **Conforms to CSA, IEC and VDE stds.**
- **Precision ball bearing system.**
- **Long operating life without maintenance.**
- **Low input power.**
- **Polarity protected.**

GENERAL DESCRIPTION

This bulletin describes the electrical and mechanical parameters of the PAMOTOR Model 8112 miniature axial fan.

PERFORMANCE CHARACTERISTICS

Airflow. **14 VDC**
41 cfm at 0 Static Pressure
35 cfm at .10 inch H_2O
0 cfm at .30 inch H_2O
(maximum static pressure)

12 VDC
36 cfm at 0 Static Pressure
26 cfm at .10 inch H_2O
0 cfm at .22 inch H_2O
(maximum static pressure)

9.5 VDC
28 cfm at 0 Static Pressure
10 cfm at .10 inch H_2O
0 cfm at .13 inch H_2O
(maximum static pressure)

ACOUSTICAL CHARACTERISTICS

38 dB (A) at 12 VDC
28 dB (SIL) at 12 VDC

MECHANICAL CHARACTERISTICS

Venturi Block. The venturi block is made of die-cast aluminum alloy, and is specifically designed for lightweight, noiseless, efficient airflow and rapid heat dissipation.

Impeller. The impeller blades are all-metal, impulse-welded to the rotor and aerodynamically contoured for optimum pressure/air delivery performance.

Finish. This fan is protected by a moisture resistant black finish.

Terminals. Two leads of No. 22 AWG insulated wire. Red identifies the positive lead.

Bearing System. The precision ball bearing system ensures long life in a high-temperature environment, and provides maximum shock and vibration resistance.

Lubrication. This fan is lubricated within the sealed bearing system by a special lubricant permitting extended operation at elevated ambient temperatures and is guaranteed to -40°C.

Weight. Despite its all-metal construction, this fan weighs only 18 ounces.

MOTOR

Basic Design. The Model 8112 has a patented brushless DC motor which is polarity protected (U.S. Patent Number 3-873-897).

Rotor Balance. The rotor is dynamically balanced to a maximum shift of the center of gravity of .0001" in each end plane.

Rotation. Clockwise, facing the air discharge.

Windings and Splices. The windings are treated with high-temperature varnish and baked at 130°C. Splices are also treated with high-temperature varnish and are further insulated with individual sleeving.

Stator Protection. Stator laminations are treated with high-temperature varnish for protection against deterioration.

Insulation Resistance. The insulation resistance is ≥5 megohms measured at 500 VDC after 48 hours humidity storage.

Insulation Class. The insulation classification is 120°C.

Dielectric Strength. This fan will withstand 600 VAC RMS for one second at 20° C and 40% relative humidity.

Speed.

9.5 VDC	12 VDC	14 VDC
2550 RPM	3300 RPM	3800 RPM

Horizontal Airflow at Zero Static Pressure

2580 RPM	3350 RPM	3900 RPM

Horizontal Airflow at Maximum Static Pressure

ELECTRICAL CHARACTERISTICS

Operating Voltage. The Model 8112 is designed for operation at 9.5-14 VDC (12 VDC nominal).

Power Rating.

9.5 VDC	12 VDC	14 VDC
1.7 Watts	2.9 Watts	4.3 Watts

Input Power at Zero Static Pressure

1.6 Watts	2.7 Watts	4.0 Watts

Input Power at Maximum Static Pressure

Input Current.

9.5 VDC	12 VDC	14 VDC
175 mA	240 mA	305 mA

Zero Static Pressure

170 mA	225 mA	285 mA

Maximum Static Pressure

ENVIRONMENTAL CHARACTERISTICS

Operating Temperature Range. This fan is designed to operate over a temperature range of -30°C to +72°C.

QUALITY VERIFICATION

Life Expectancy. The life expectancy of this fan is 60,000 hours at 72° C.

Safety Codes. This fan has Underwriters' Laboratories Inc. Yellow Card Component Recognition No. E41168. It also conforms to CSA, IEC and VDE standards.

Performance Data

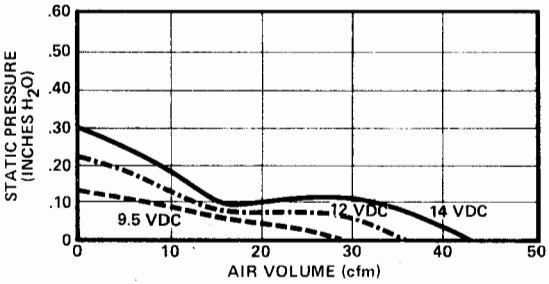

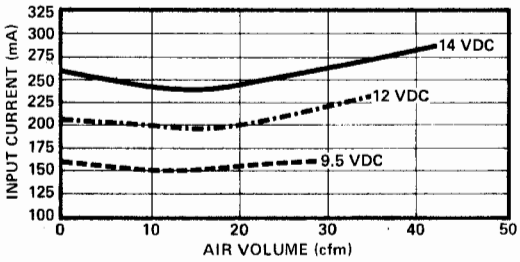

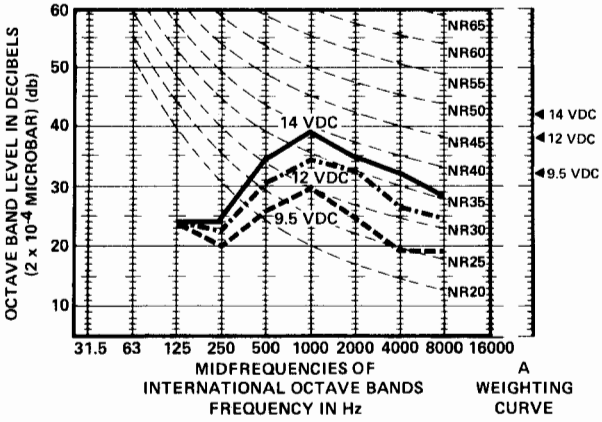

MOUNTING DIMENSIONS

Please see Drawing 3, page 136 of this catalog.

ACCESSORIES

PAMOTOR offers a full line of accessory items for its fans. Please refer to pages 140-141 of this catalog.

Model 8112G 3⅛" All Metal 12VDC Axial Fan

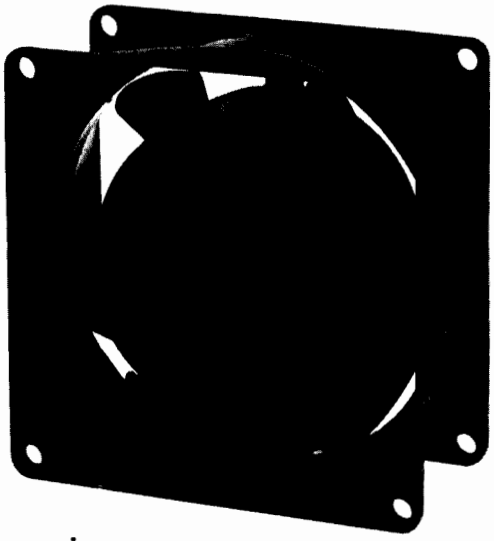

Dimensions
(in inches)

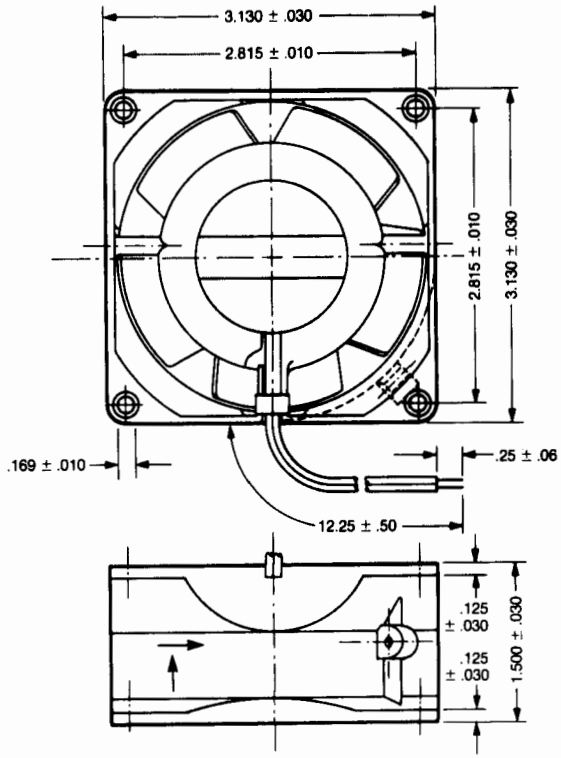

FEATURES:

- All-metal, brushless electronic motor.
- Solid state integral electronics.
- No external inverter required.
- Low input power.
- Polarity protected.
- Sleeve, broached sintered iron bearing system.
- Low EMI.
- UL recognized.

GENERAL DESCRIPTION

This bulletin describes the electrical and mechanical parameters of the PAMOTOR Model 8112G miniature axial fan.

PERFORMANCE CHARACTERISTICS

Airflow. **16 VDC**
49 cfm at 0 Static Pressure
41 cfm at .10 inch H_2O
0 cfm at .42 inch H_2O
(maximum static pressure)

12 VDC
36 cfm at 0 Static Pressure
18 cfm at .10 inch H_2O
0 cfm at .26 inch H_2O
(maximum static pressure)

8 VDC
21 cfm at 0 Static Pressure
0 cfm at .1 inch H_2O
(maximum static pressure)

ACOUSTICAL CHARACTERISTICS

37 dB (A) at 12 VDC
29 dB (SIL) at 12 VDC

MECHANICAL CHARACTERISTICS

Venturi Block. The venturi block is made of die-cast aluminum alloy, and is specifically designed for light-weight, noiseless, efficient airflow and rapid heat dissipation.

Impeller. The impeller blades are all-metal, impulse-welded to the rotor and are aerodynamically contoured for optimum pressure/air delivery performance.

Finish. This fan is protected by a moisture resistant black finish.

Terminals. Two leads of No. 22 AWG insulated wire. Red identifies the positive lead.

Bearing System. The dual sleeve broached sintered iron bearing system has a large oil felt reservoir between the sleeve bearings in addition to a thrust bearing for increased operational life in a horizontal plane installation.

Lubrication. Model 8112G is lubricated within the bearing system by a special lubricant permitting extended operation at elevated ambient temperatures.

Weight. This fan weighs only 18 ounces.

MOTOR

Basic Design. The Model 8112G has a brushless DC motor which is polarity protected.

Rotor Balance. The rotor is dynamically balanced to a maximum shift of the center of gravity of .0001" in each end plane.

Rotation. Counterclockwise, facing the air discharge.

Windings and Splices. The windings are treated with high-temperature varnish and are further insulated with individual sleeving.

Stator Protection. Stator laminations are treated with high-temperature varnish for protection against deterioration.

Insulation Resistance. The insulation resistance is ≥5 megohms measured at 500 VDC after 48 hours humidity storage.

Insulation Class. The insulation classification is 120°C.

Dielectric Strength. This fan will withstand 600 VAC RMS for one second at 20° C and 40% relative humidity.

Speed.

8 VDC	12 VDC	16 VDC
2100 RPM	3450 RPM	4600 RPM

Horizontal Airflow at Zero Static Pressure

2050 RPM	3380 RPM	4500 RPM

Horizontal Airflow at Maximum Static Pressure

ELECTRICAL CHARACTERISTICS

Operating Voltage. The Model 8112G is designed for operation at 8-16 VDC (12 VDC nominal).

Power Rating.

8 VDC	12 VDC	16 VDC
1.1 Watts	2.6 Watts	4.8 Watts

Input Power at Zero Static Pressure

1.6 Watts	3.2 Watts	5.6 Watts

Input Power at Maximum Static Pressure

Input Current.

8 VDC	12 VDC	16 VDC
140 mA	220 mA	300 mA

Zero Static Pressure

155 mA	230 mA	320 mA

Maximum Static Pressure

ENVIRONMENTAL CHARACTERISTICS

Operating Temperature Range. This fan is designed to operate over a temperature range of -10° C to +65° C.

QUALITY VERIFICATION

Life Expectancy. The life expectancy of this fan is 35,000 hours at 65°C.

Safety Codes. This fan conforms to UL, CSA, VDE and IEC standards.

Performance Data

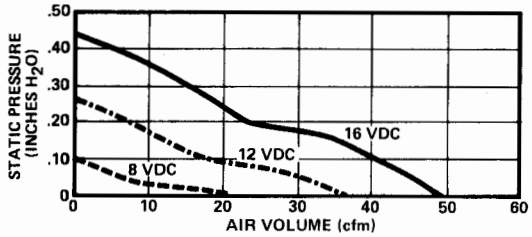

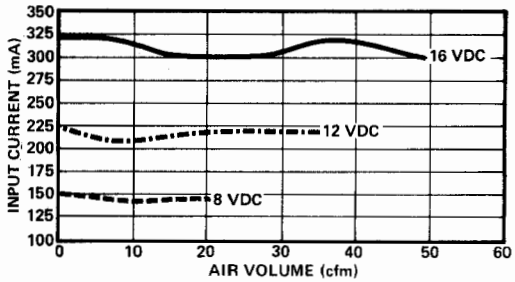

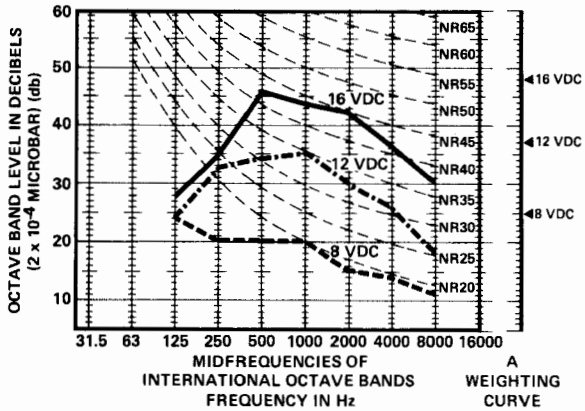

MOUNTING DIMENSIONS

Please see Drawing 3, page 136 of this catalog.

ACCESSORIES

PAMOTOR offers a full line of accessory items for its fans. Please refer to pages 140-141 of this catalog.

Model 8112K 3⅛" All Metal 12VDC Axial Fan

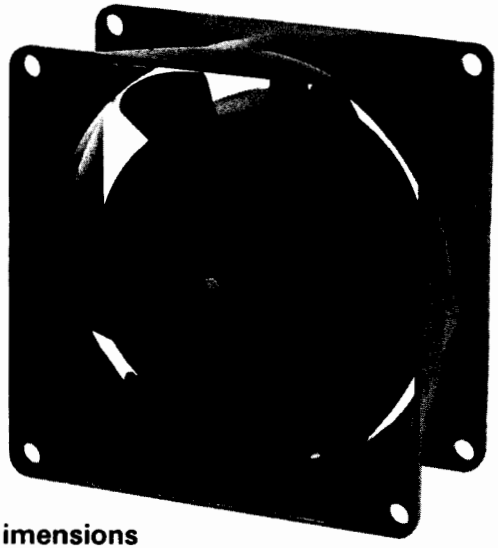

Dimensions
(in inches)

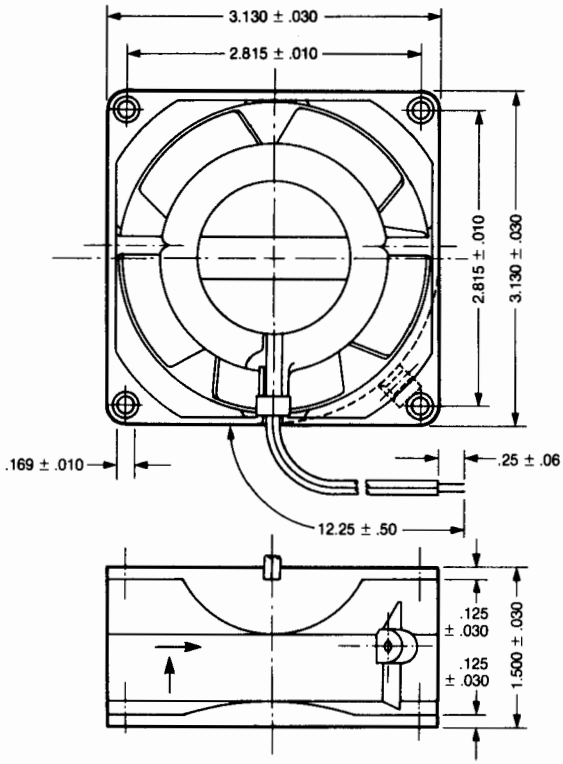

FEATURES:

- All-metal, brushless electronic motor.
- Solid state integral electronics, no external inverter required.
- Conforms to CSA, IEC and VDE stds.
- Precision ball bearing system.
- Long operating life without maintenance.
- Low input power.
- Polarity protected.
- UL recognized.

GENERAL DESCRIPTION

This bulletin describes the electrical and mechanical parameters of the PAMOTOR Model 8112K miniature axial fan.

PERFORMANCE CHARACTERISTICS

Airflow. **16 VDC**
47 cfm at 0 Static Pressure
42 cfm at .10 inch H_2O
0 cfm at .47 inch H_2O
(maximum static pressure)

12 VDC
36 cfm at 0 Static Pressure
28 cfm at .10 inch H_2O
0 cfm at .29 inch H_2O
(maximum static pressure)

8 VDC
20 cfm at 0 Static Pressure
4 cfm at .10 inch H_2O
0 cfm at .12 inch H_2O
(maximum static pressure)

ACOUSTICAL CHARACTERISTICS

39 dB (A) at 12 VDC
29 dB (SIL) at 12 VDC

MECHANICAL CHARACTERISTICS

Venturi Block. The venturi block is made of die-cast aluminum alloy, and is specifically designed for light-weight, noiseless, efficient airflow and rapid heat dissipation.

Impeller. The impeller blades are all-metal, impulse-welded to the rotor and aerodynamically contoured for optimum pressure/air delivery performance.

Finish. This fan is protected by a moisture resistant black finish.

Terminals. Two leads of No. 22 AWG insulated wire. Red identifies the positive lead.

Bearing System. The precision ball bearing system ensures long life in a high-temperature environment, and provides maximum shock and vibration resistance.

Lubrication. This fan is lubricated within the sealed bearing system by a special lubricant permitting extended operation at elevated ambient temperatures and is guaranteed to -40°C.

Weight. Despite its all-metal construction, this fan weighs only 18 ounces.

MOTOR

Basic Design. The Model 8112K has a patented brushless DC motor which is polarity protected.

Rotor Balance. The rotor is dynamically balanced to a maximum shift of the center of gravity of .0001" in each end plane.

Rotation. Counterclockwise, facing the air discharge.

Windings and Splices. The windings are treated with high-temperature varnish and are further insulated with individual sleeving.

Stator Protection. Stator laminations are treated with high-temperature varnish for protection against deterioration.

Insulation Resistance. The insulation resistance is ≥5 megohms measured at 500 VDC after 48 hours humidity storage.

Insulation Class. The insulation classification is 120°C.

Dielectric Strength. This fan will withstand 600 VAC RMS for one second at 20° C and 40% relative humidity.

Speed.

8 VDC	12 VDC	16 VDC
2150 RPM	3450 RPM	4600 RPM

Horizontal Airflow at Zero Static Pressure

2100 RPM	3350 RPM	4450 RPM

Horizontal Airflow at Maximum Static Pressure

ELECTRICAL CHARACTERISTICS

Operating Voltage. The Model 8112K is designed for operation at 8-16 VDC (12 VDC nominal).

Power Rating.

8 VDC	12 VDC	16 VDC
1.0 Watts	2.4 Watts	4.6 Watts

Input Power at Zero Static Pressure

1.2 Watts	2.6 Watts	5.2 Watts

Input Power at Maximum Static Pressure

Input Current.

8 VDC	12 VDC	16 VDC
130 mA	200 mA	285 mA

Zero Static Pressure

150 mA	220 mA	325 mA

Maximum Static Pressure

ENVIRONMENTAL CHARACTERISTICS

Operating Temperature Range. This fan is designed to operate over a temperature range of -20°C to +65°C.

QUALITY VERIFICATION

Life Expectancy. The life expectancy of this fan is 60,000 hours at 65° C.

Safety Codes. This fan conforms to UL, CSA, VDE and IEC standards.

Performance Data

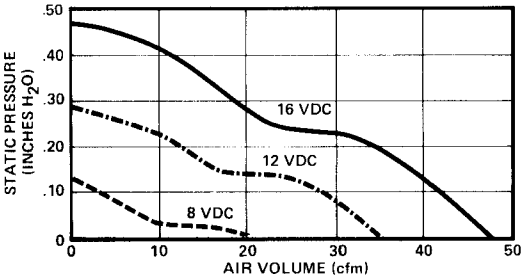

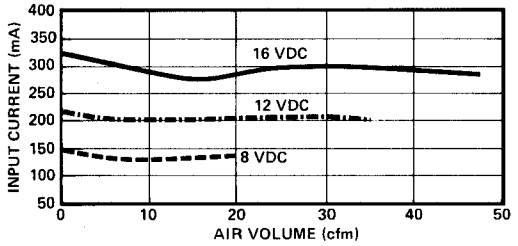

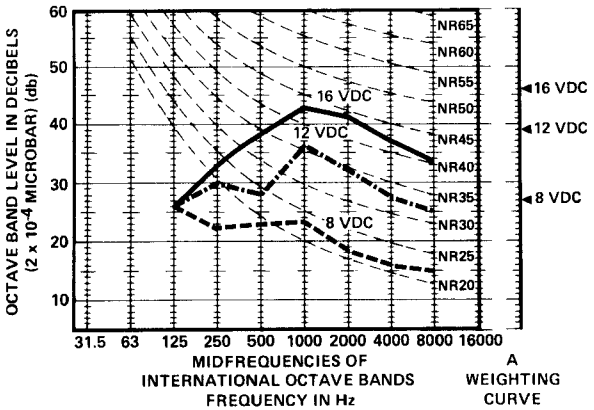

MOUNTING DIMENSIONS

Please see Drawing 3, page 136 of this catalog.

ACCESSORIES

PAMOTOR offers a full line of accessory items for its fans. Please refer to pages 140-141 of this catalog.

Model 8124
3⅛" All Metal
24 VDC Axial Fan

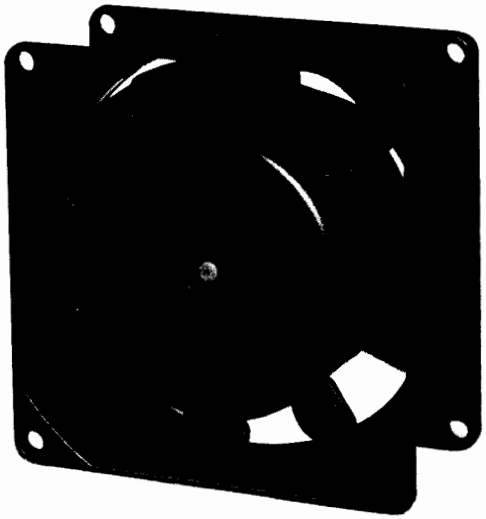

Dimensions
(in inches)

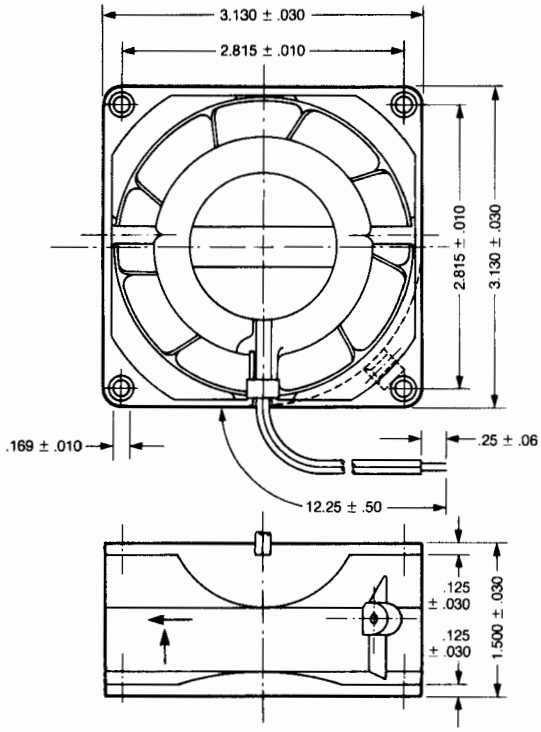

FEATURES:

- **All-metal, brushless electronic motor.**
- **Solid state integral electronics, no external inverter required.**
- **UL recognized.**
- **Conforms to CSA, IEC and VDE stds.**
- **Precision ball bearing system.**
- **Long operating life without maintenance.**
- **Low input power.**
- **Polarity protected.**

GENERAL DESCRIPTION

This bulletin describes the electrical and mechanical parameters of the PAMOTOR Model 8124 miniature axial fan.

PERFORMANCE CHARACTERISTICS

Airflow. **28 VDC**
41 cfm at 0 Static Pressure
35 cfm at .10 inch H_2O
0 cfm at .30 inch H_2O
(maximum static pressure)

24 VDC
36 cfm at 0 Static Pressure
26 cfm at .10 inch H_2O
0 cfm at .22 inch H_2O
(maximum static pressure)

19 VDC
28 cfm at 0 Static Pressure
10 cfm at .10 inch H_2O
0 cfm at .13 inch H_2O
(maximum static pressure)

ACOUSTICAL CHARACTERISTICS

38 dB (A) at 24 VDC
28 dB (SIL) at 24 VDC

MECHANICAL CHARACTERISTICS

Venturi Block. The venturi block is made of die-cast aluminum alloy, and is specifically designed for light-weight, noiseless, efficient airflow and rapid heat dissipation.

Impeller. The impeller blades are all-metal, impulse-welded to the rotor and are aerodynamically contoured for optimum pressure/air delivery performance.

Finish. This fan is protected by a moisture resistant black finish.

Terminals. Two leads of No. 22 AWG insulated wire. Red identifies the positive lead.

Bearing System. The precision ball bearing system ensures long life in a high-temperature environment, and provides maximum shock and vibration resistance.

Lubrication. This fan is lubricated within the sealed bearing system by a special lubricant permitting extended operation at elevated ambient temperatures and is guaranteed to -40°C..

Weight. Despite its all-metal construction, this fan weighs only 18 ounces.

MOTOR

Basic Design. The Model 8124 has a patented brushless DC motor which is polarity protected (U.S. Patent Number 3-873-897).

Rotor Balance. The rotor is dynamically balanced to a maximum shift of the center of gravity of .0001" in each end plane.

Rotation. Clockwise, facing the air discharge.

Windings and Splices. The windings are treated with high-temperature varnish and baked at 130°C. Splices are also treated with high-temperature varnish and are further insulated with individual sleeving.

Stator Protection. Stator laminations are treated with high-temperature varnish for protection against deterioration.

Insulation Resistance. The insulation resistance is ≥5 megohms measured at 500 VDC after 48 hours humidity storage.

Insulation Class. The insulation classification is 120°C.

Dielectric Strength. This fan will withstand 600 VAC RMS for one second at 20° C and 40% relative humidity.

Speed.

19 VDC	24 VDC	28 VDC
2650 RPM	3300 RPM	3800 RPM

Horizontal Airflow at Zero Static Pressure

2690 RPM	3350 RPM	3900 RPM

Horizontal Airflow at Maximum Static Pressure

ELECTRICAL CHARACTERISTICS

Operating Voltage. The Model 8124 is designed for operation at 19-28 VDC (24 VDC nominal).

Power Rating.

19 VDC	24 VDC	28 VDC
1.7 Watts	3.0 Watts	4.3 Watts

Input Power at Zero Static Pressure

1.6 Watts	2.8 Watts	3.9 Watts

Input Power at Maximum Static Pressure

Input Current.

19 VDC	24 VDC	28 VDC
90 mA	125 mA	152 mA

Zero Static Pressure

85 mA	115 mA	138 mA

Maximum Static Pressure

ENVIRONMENTAL CHARACTERISTICS

Operating Temperature Range. This fan is designed to operate over a temperature range of -30°C to +72°C.

QUALITY VERIFICATION

Life Expectancy. The life expectancy of this fan is 60,000 hours at 72°C.

Safety Codes. This fan has Underwriters Laboratories, Inc. Yellow Card Component Recognition No. E41168. It also conforms to CSA, IEC and VDE standards.

Performance Data

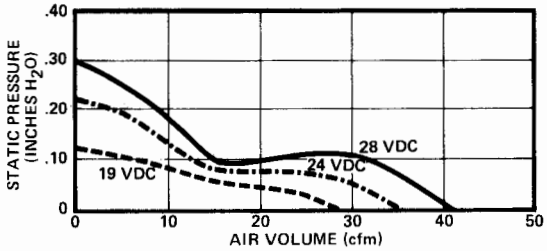

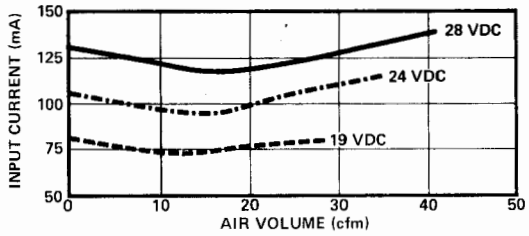

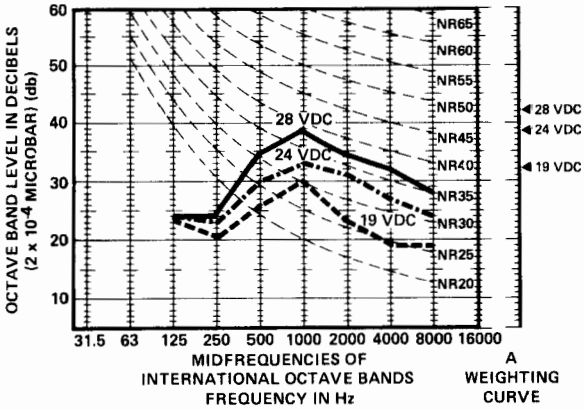

MOUNTING DIMENSIONS

Please see Drawing 3, page 136 of this catalog.

ACCESSORIES

PAMOTOR offers a full line of accessory items for its fans. Please refer to pages 140-141 of this catalog.

Model 8124G 3⅛" All Metal 24VDC Axial Fan

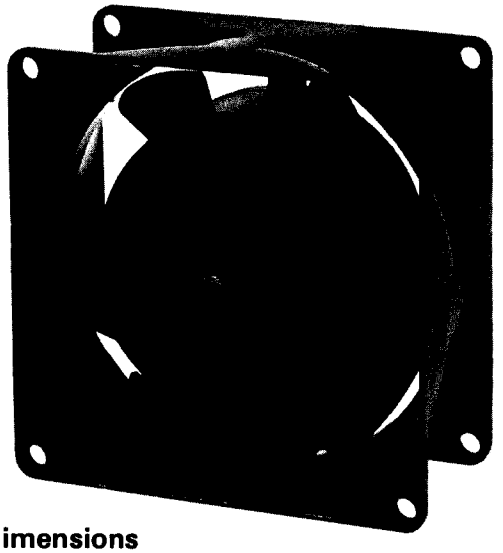

Dimensions
(in inches)

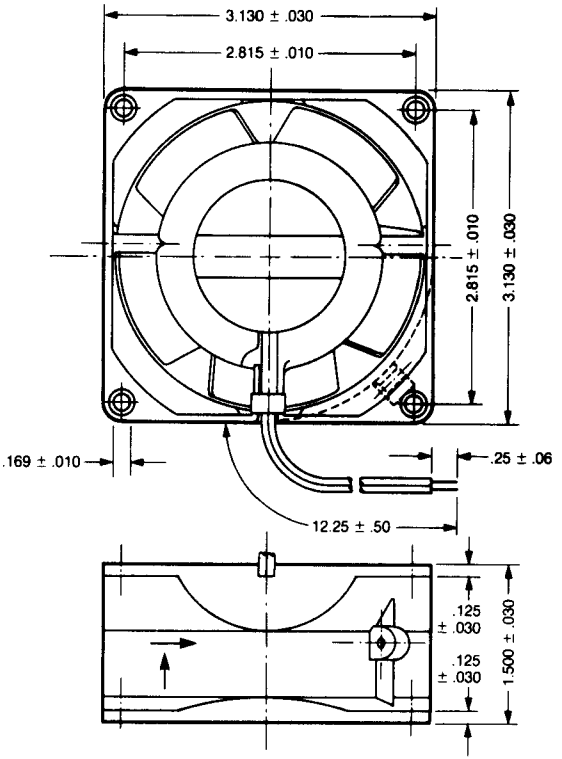

FEATURES:

- All-metal, brushless electronic motor.
- Solid state integral electronics.
- No external inverter required.
- Low input power.
- Polarity protected.
- Sleeve, broached sintered iron bearing system.
- Low EMI.
- UL recognized.

GENERAL DESCRIPTION

This bulletin describes the electrical and mechanical parameters of the PAMOTOR Model 8124G miniature axial fan.

PERFORMANCE CHARACTERISTICS

Airflow. **30 VDC**
44 cfm at 0 Static Pressure
36 cfm at .10 inch H_2O
0 cfm at .37 inch H_2O
(maximum static pressure)

24 VDC
37 cfm at 0 Static Pressure
15 cfm at .10 inch H_2O
0 cfm at .25 inch H_2O
(maximum static pressure)

18 VDC
26 cfm at 0 Static Pressure
6 cfm at .10 inch H_2O
0 cfm at .13 inch H_2O
(maximum static pressure)

ACOUSTICAL CHARACTERISTICS

37 dB (A) at 24 VDC
26 dB (SIL) at 24 VDC

MECHANICAL CHARACTERISTICS

Venturi Block. The venturi block is made of die-cast aluminum alloy, and is specifically designed for lightweight, noiseless, efficient airflow and rapid heat dissipation.

Impeller. The impeller blades are all-metal, impulse-welded to the rotor and are aerodynamically contoured for optimum pressure/air delivery performance.

Finish. This fan is protected by a moisture resistant black finish.

Terminals. Two leads of No. 22 AWG insulated wire. Red identifies the positive lead.

Bearing System. The dual sleeve broached sintered iron bearing system has a large oil felt reservoir between the sleeve bearings in addition to a thrust bearing for increased operational life in a horizontal plane installation.

Lubrication. Model 8124G is lubricated within the bearing system by a special lubricant permitting extended operation at elevated ambient temperatures.

Weight. This fan weighs only 18 ounces.

MOTOR

Basic Design. The Model 8124G has a brushless DC motor which is polarity protected.

Rotor Balance. The rotor is dynamically balanced to a maximum shift of the center of gravity of .0001" in each end plane.

Rotation. Counterclockwise, facing the air discharge.

Windings and Splices. The windings are treated with high-temperature varnish and are further insulated with individual sleeving.

Stator Protection. Stator laminations are treated with high-temperature varnish for protection against deterioration.

Insulation Resistance. The insulation resistance is ≥5 megohms measured at 500 VDC after 48 hours humidity storage.

Insulation Class. The insulation classification is 120°C.

Dielectric Strength. This fan will withstand 600 VAC RMS for one second at 20° C and 40% relative humidity.

Speed.

18 VDC	24 VDC	30 VDC
2600 RPM	3450 RPM	4100 RPM

Horizontal Airflow at Zero Static Pressure

2550 RPM	3380 RPM	4000 RPM

Horizontal Airflow at Maximum Static Pressure

ELECTRICAL CHARACTERISTICS

Operating Voltage. The Model 8124G is designed for operation at 18-30 VDC (24 VDC nominal).

Power Rating.

18 VDC	24 VDC	30 VDC
1.4 Watts	2.6 Watts	4.1 Watts

Input Power at Zero Static Pressure

1.9 Watts	3.2 Watts	5.0 Watts

Input Power at Maximum Static Pressure

Input Current.

18 VDC	24 VDC	30 VDC
80 mA	110 mA	135 mA

Zero Static Pressure

87 mA	115 mA	140 mA

Maximum Static Pressure

ENVIRONMENTAL CHARACTERISTICS

Operating Temperature Range. This fan is designed to operate over a temperature range of -10° C to +65° C.

QUALITY VERIFICATION

Life Expectancy. The life expectancy of this fan is 35,000 hours at 65° C.

Safety Codes. This fan conforms to UL, CSA, VDE and IEC standards.

Performance Data

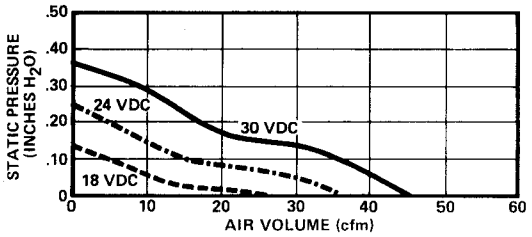

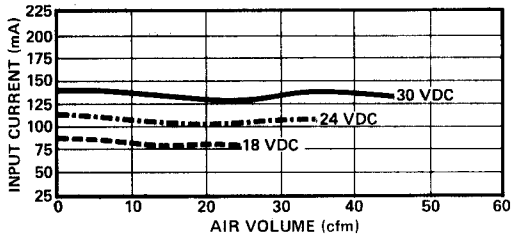

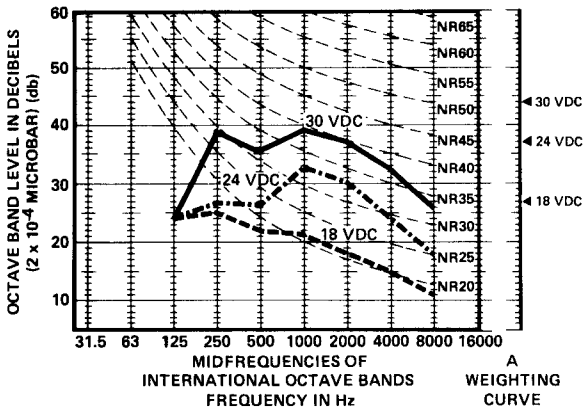

MOUNTING DIMENSIONS

Please see Drawing 3, page 136 of this catalog.

ACCESSORIES

PAMOTOR offers a full line of accessory items for its fans. Please refer to pages 140-141 of this catalog.

Model 8124K 3⅛" All Metal 24 VDC Axial Fan

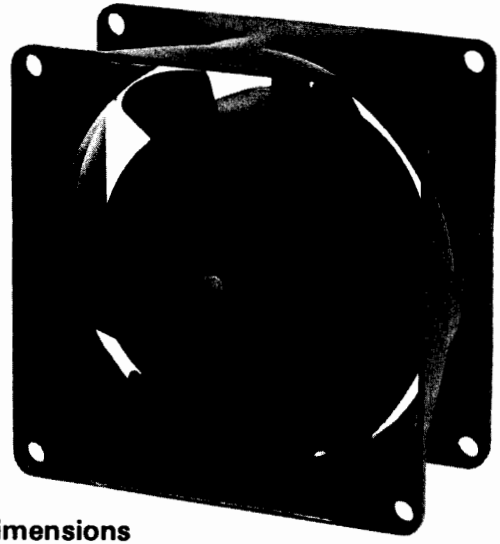

Dimensions
(in inches)

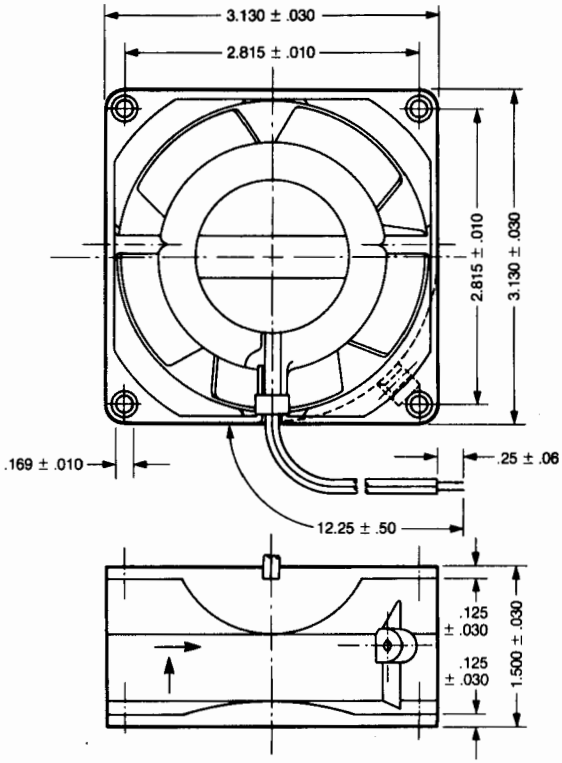

FEATURES:

- All-metal, brushless electronic motor.
- Solid state integral electronics, no external inverter required.
- Conforms to CSA, IEC and VDE stds.
- Precision ball bearing system.
- Long operating life without maintenance.
- Low input power.
- Polarity protected.
- UL recognized.

GENERAL DESCRIPTION

This bulletin describes the electrical and mechanical parameters of the PAMOTOR Model 8124K miniature axial fan.

PERFORMANCE CHARACTERISTICS

Airflow. **30 VDC**
44 cfm at 0 Static Pressure
38 cfm at .10 inch H_2O
0 cfm at .45 inch H_2O
(maximum static pressure)

24 VDC
36 cfm at 0 Static Pressure
28 cfm at .10 inch H_2O
0 cfm at .29 inch H_2O
(maximum static pressure)

18 VDC
27 cfm at 0 Static Pressure
10 cfm at .10 inch H_2O
0 cfm at .17 inch H_2O
(maximum static pressure)

ACOUSTICAL CHARACTERISTICS

39 dB (A) at 24 VDC
29 dB (SIL) at 24 VDC

MECHANICAL CHARACTERISTICS

Venturi Block. The venturi block is made of die-cast aluminum alloy, and is specifically designed for light-weight, noiseless, efficient airflow and rapid heat dissipation.

Impeller. The impeller blades are all-metal, impulse-welded to the rotor and are aerodynamically contoured for optimum pressure/air delivery performance.

Finish. This fan is protected by a moisture resistant black finish.

Terminals. Two leads of No. 22 AWG insulated wire. Red identifies the positive lead.

Bearing System. The precision ball bearing system ensures long life in a high-temperature environment, and provides maximum shock and vibration resistance.

Lubrication. This fan is lubricated within the sealed bearing system by a special lubricant permitting extended operation at elevated ambient temperatures and is guaranteed to -40°C.

Weight. Despite its all-metal construction, this fan weighs only 18 ounces.

MOTOR

Basic Design. The Model 8124K has a patented brushless DC motor which is polarity protected.

Rotor Balance The rotor is dynamically balanced to a maximum shift of the center of gravity of .0001" in each end plane.

Rotation. Counterclockwise, facing the air discharge.

Windings and Splices. The windings are treated with high-temperature varnish and are further insulated with individual sleeving.

Stator Protection. Stator laminations are treated with high-temperature varnish for protection against deterioration.

Insulation Resistance. The insulation resistance is ≥5 megohms measured at 500 VDC after 48 hours humidity storage.

Insulation Class. The insulation classification is 120°C.

Dielectric Strength. This fan will withstand 600 VAC RMS for one second at 20° C and 40% relative humidity.

Speed.

18 VDC	**24 VDC**	**30 VDC**
2550 RPM	3450 RPM	4200 RPM

Horizontal Airflow at Zero Static Pressure

2500 RPM	3350 RPM	4050 RPM

Horizontal Airflow at Maximum Static Pressure

ELECTRICAL CHARACTERISTICS

Operating Voltage. The Model 8124K is designed for operation at 18-30 VDC (24 VDC nominal).

Power Rating.

18 VDC	**24 VDC**	**30 VDC**
1.4 Watts	3.0 Watts	5.0 Watts

Input Power at Zero Static Pressure

1.5 Watts	3.2 Watts	5.1 Watts

Input Power at Maximum Static Pressure

Input Current.

18 VDC	**24 VDC**	**30 VDC**
80 mA	125 mA	165 mA

Zero Static Pressure

85 mA	135 mA	170 mA

Maximum Static Pressure

ENVIRONMENTAL CHARACTERISTICS

Operating Temperature Range. This fan is designed to operate over a temperature range of -20°C to +65°C.

QUALITY VERIFICATION

Life Expectancy. The life expectancy of this fan is 60,000 hours at 65°C.

Safety Codes. This fan conforms to UL, CSA, VDE and IEC standards.

Performance Data

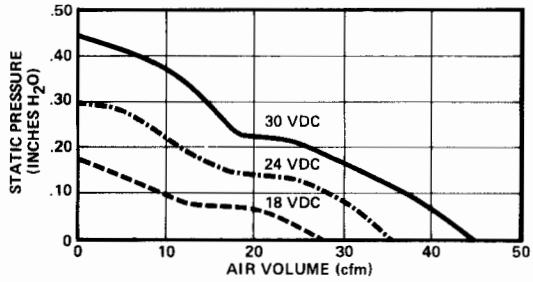

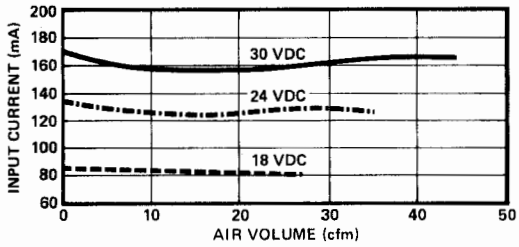

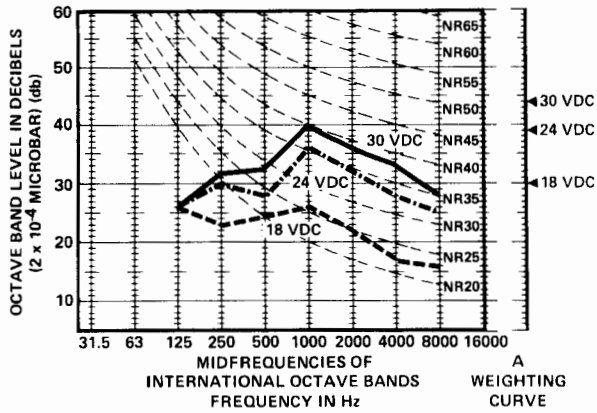

MOUNTING DIMENSIONS

Please see Drawing 3, page 136 of this catalog.

ACCESSORIES

PAMOTOR offers a full line of accessory items for its fans. Please refer to pages 140-141 of this catalog.

Model 8148
3⅛" All Metal
48VDC Axial Fan

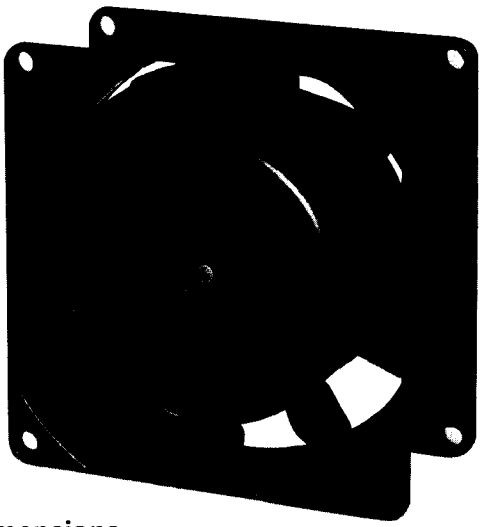

Dimensions
(in inches)

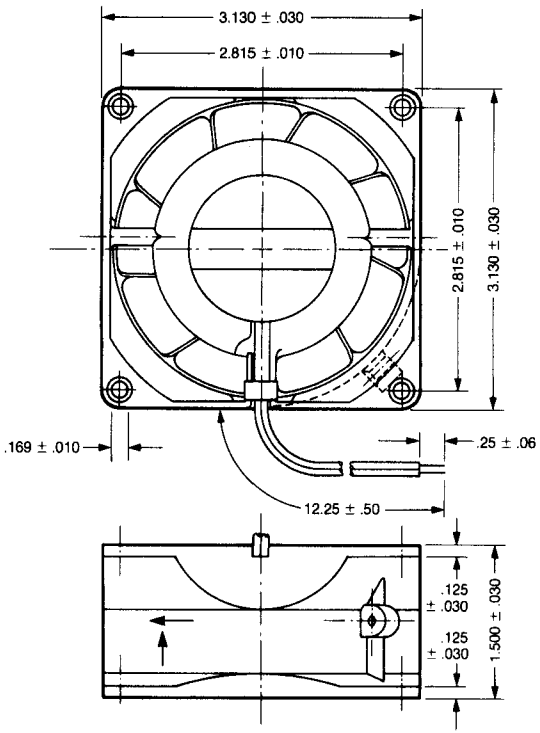

FEATURES:

- All-metal, brushless electronic motor.
- Solid state integral electronics, no external inverter required.
- UL recognized.
- Conforms to CSA, IEC and VDE stds.
- Precision ball bearing system.
- Long operating life without maintenance.
- Low input power.
- Polarity protected.

GENERAL DESCRIPTION

This bulletin describes the electrical and mechanical parameters of the PAMOTOR Model 8148 miniature axial fan.

PERFORMANCE CHARACTERISTICS

Airflow. **56 VDC**
41 cfm at 0 Static Pressure
35 cfm at .10 inch H_2O
0 cfm at .34 inch H_2O
(maximum static pressure)

48 VDC
38 cfm at 0 Static Pressure
27 cfm at .10 inch H_2O
0 cfm at .25 inch H_2O
(maximum static pressure)

38 VDC
30 cfm at 0 Static Pressure
10 cfm at .10 inch H_2O
0 cfm at .15 inch H_2O
(maximum static pressure)

ACOUSTICAL CHARACTERISTICS

38 dB (A) at 48 VDC
28 dB (SIL) at 48 VDC

MECHANICAL CHARACTERISTICS

Venturi Block. The venturi block is made of die-cast aluminum alloy, and is specifically designed for light-weight, noiseless, efficient airflow and rapid heat dissipation.

Impeller. The impeller blades are all-metal, impulse-welded to the rotor and are aerodynamically contoured for optimum pressure/air delivery performance.

Finish. This fan is protected by a moisture resistant black finish.

Terminals. This fan is supplied with two leads of No. 22 AWG U/L approved wire. Red identifies the positive lead.

Bearing System. The precision ball bearing system ensures long life in a high-temperature environment, and provides maximum shock and vibration resistance.

Lubrication. This fan is lubricated within the sealed bearing system by a special lubricant permitting extended operation at elevated ambient temperatures.

Weight. This fan weighs only 18 ounces.

MOTOR

Basic Design. The Model 8148 has a brushless DC motor which is polarity protected.

Rotor Balance. The rotor is dynamically balanced to a maximum shift of the center of gravity of .0001" in each end plane.

Rotation. Clockwise, facing the air discharge.

Windings and Splices. The windings are treated with high-temperature varnish and are further insulated with individual sleeving.

Stator Protection. Stator laminations are treated with high-temperature varnish for protection against deterioration.

Insulation Resistance. The insulation resistance is ≥5 megohms measured at 500 VDC after 48 hours humidity storage.

Insulation Class. The insulation classification is 120°C.

Dielectric Strength. This fan will withstand 660 VAC RMS for one second at 20° C and 40% relative humidity.

Speed.

38 VDC	48 VDC	56 VDC
2750 RPM	3400 RPM	3900 RPM

Horizontal Airflow at Zero Static Pressure

2800 RPM	3450 RPM	4000 RPM

Horizontal Airflow at Maximum Static Pressure

ELECTRICAL CHARACTERISTICS

Operating Voltage. The Model 8148 is designed for operation at 38-56 VDC (48 VDC nominal).

Power Rating.

38 VDC	48 VDC	56 VDC
1.8 Watts	3.1 Watts	4.4 Watts

Input Power at Zero Static Pressure

1.7 Watts	2.9 Watts	4.1 Watts

Input Power at Maximum Static Pressure

Input Current.

38 VDC	48 VDC	56 VDC
48 mA	64 mA	78 mA

Zero Static Pressure

45 mA	60 mA	73 mA

Maximum Static Pressure

ENVIRONMENTAL CHARACTERISTICS

Operating Temperature Range. This fan is designed to operate over a temperature range of -30°C to +72°C.

QUALITY VERIFICATION

Life Expectancy. The life expectancy of this fan is 60,000 hours at 72°C.

Safety Codes. This fan has Underwriters' Laboratories, Inc. Yellow Card Component Recognition No. E41168. It also conforms to CSA, VDE and IEC standards.

Performance Data

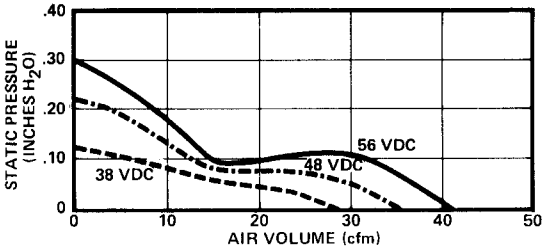

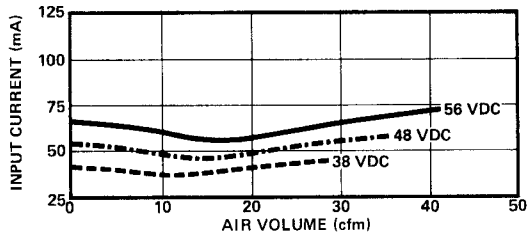

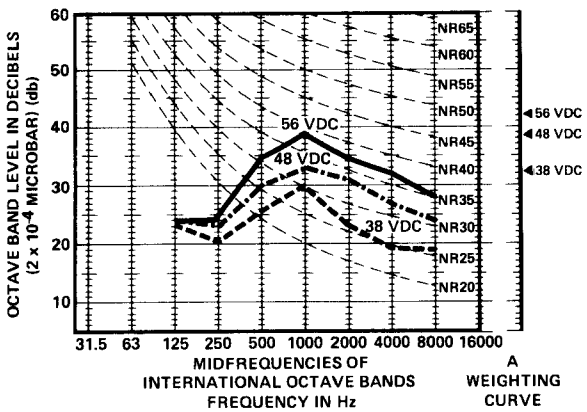

MOUNTING DIMENSIONS

Please see Drawing 3, page 136 of this catalog.

ACCESSORIES

PAMOTOR offers a full line of accessory items for its fans. Please refer to pages 140-141 of this catalog.

Model RL90-18/24 4¾" 24 VDC Radial Blower

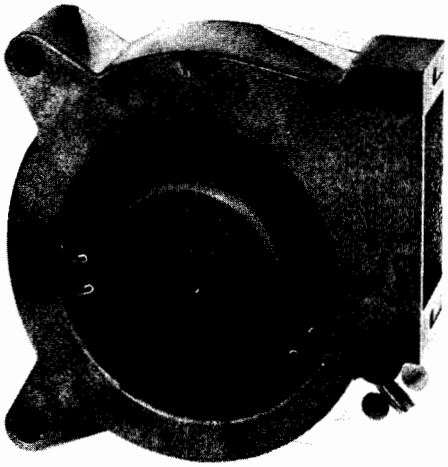

Dimensions
(in inches)

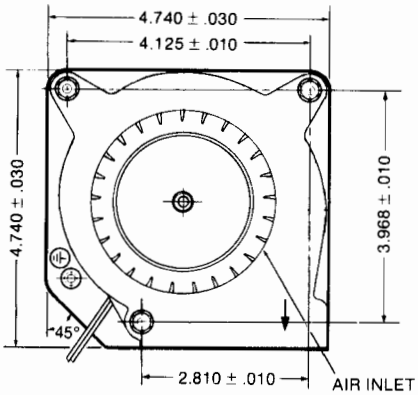

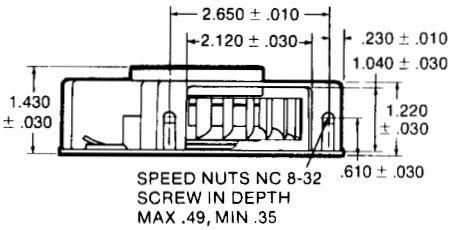

FEATURES:

- **Brushless electronic motor.**
- **Solid state integral electronics.**
- **No external inverter required.**
- **UL recognized.**
- **Conforms to CSA, IEC and VDE stds.**
- **Precision ball bearing system.**
- **Long operating life without maintenance.**

GENERAL DESCRIPTION

This bulletin describes the electrical and mechanical parameters of the PAMOTOR Model RL 90-18/24 miniature DC radial blower, intended for general cooling purposes in military, medical and industrial electronic systems.

PERFORMANCE CHARACTERISTICS

Airflow. **28 VDC**
31 cfm at 0 Static Pressure
29 cfm at .10 inch H_2O
0 cfm at .64 inch H_2O
(maximum static pressure)

24 VDC
28 cfm at 0 Static Pressure
26 cfm at .10 inch H_2O
0 cfm at .50 inch H_2O
(maximum static pressure)

19 VDC
19 cfm at 0 Static Pressure
15 cfm at .10 inch H_2O
0 cfm at .22 inch H_2O
(maximum static pressure)

ACOUSTICAL CHARACTERISTICS

54 dB (A) at 24 VDC
43 dB (SIL) at 24 VDC

MECHANICAL CHARACTERISTICS

Construction. The housing is polycarbonate. The mounting plate is steel and the fan wheel is polyamide.

Impeller. The impeller blades are fitted to the rotor and are aerodynamically contoured for optimum pressure/air delivery performance.

Terminals. This blower is supplied with two leads (12.25" ± .50" Lg) of No. 22 AWG insulated wire. Red identifies the positive lead.

Bearing System. The precision ball bearing system ensures long life in a high-temperature environment, and provides maximum shock and vibration resistance.

Lubrication. This blower is lubricated within the sealed bearing system by a special lubricant permitting extended operation at elevated ambient temperatures.

Weight. This blower weighs 23 ounces.

MOTOR

Basic Design. The Model RL 90-18/24 has a patented brushless DC motor which is polarity protected (U.S. Patent Number 3-873-897).

Rotor Balance. The rotor is dynamically balanced to a maximum shift of the center of gravity of .0001" in each end plane.

Rotation. Clockwise, facing rotor side.

Windings and Splices. The windings are treated with high-temperature varnish and baked at 130°C. Splices are also treated with high-temperature varnish and are further insulated with individual sleeving.

Stator Protection. Stator laminations are treated with high-temperature varnish for protection against deterioration.

Insulation Resistance. The insulation resistance is ≥5 megohms measured at 500 VDC after 48 hours humidity storage.

Insulation Class. The insulation classification is 120°C.

Dielectric Strength. The blower will withstand 600 VAC RMS for one second at 20° C and 40% relative humidity.

Speed.

19 VDC	24 VDC	28 VDC
2100 RPM	2520 RPM	2800 RPM

Horizontal Airflow at Zero Static Pressure

2500 RPM	3200 RPM	3650 RPM

Maximum Static Pressure

ELECTRICAL CHARACTERISTICS

Operating Voltage. This blower has a rated voltage of 24 VDC and a voltage range of 19-28 VDC.

Power Rating.

19 VDC	24 VDC	28 VDC
3.0 Watts	5.2 Watts	7.6 Watts

Input Power at Zero Static Pressure

1.9 Watts	3.1 Watts	4.3 Watts

Input Power at Maximum Static Pressure

Input Current.

19 VDC	24 VDC	28 VDC
160 mA	215 mA	270 mA

Zero Static Pressure

100 mA	130 mA	155 mA

Maximum Static Pressure

ENVIRONMENTAL CHARACTERISTICS

Operating Temperature Range. This blower is designed to operate over a temperature range of -30°C to +72° C.

QUALITY VERIFICATION

Life Expectancy. The life expectancy of this blower is 60,000 hours at 72°C.

Safety Codes. This blower has Underwriters Laboratories, Inc. Yellow Card Component Recognition No. E41168, and conforms to CSA, IEC and VDE standards.

Performance Data

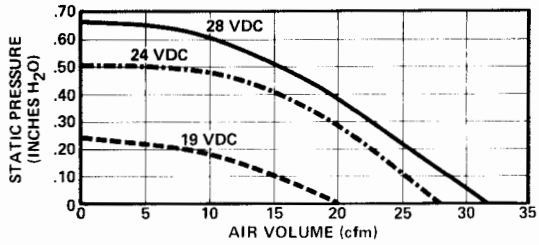

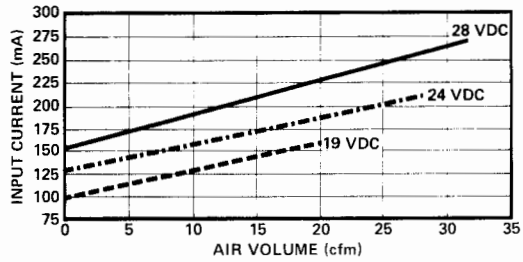

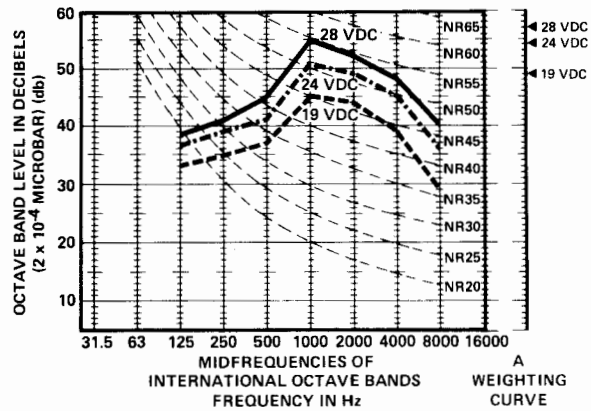

AC FANS & BLOWERS

Engineered like no other cooling devices in the world.

AC Fans and Blowers

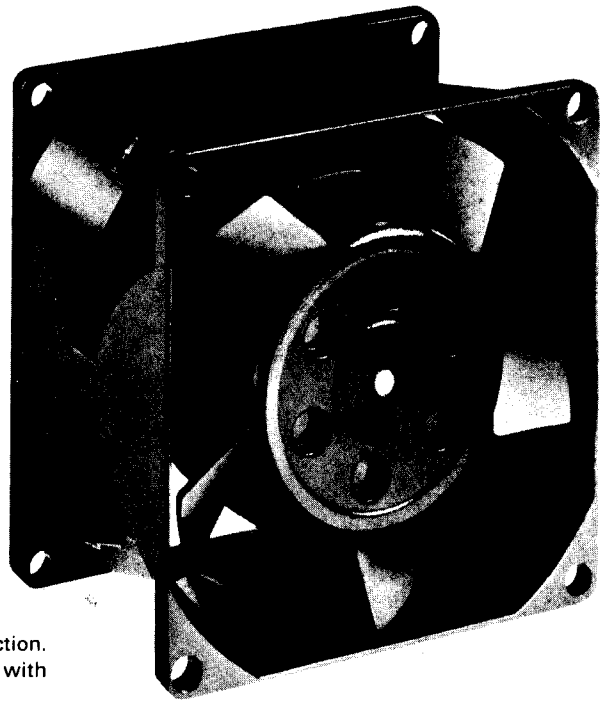

Field proven quality products you can rely upon for all of your cooling requirements.

PAMOTOR offers a wide variety of fans for your selection. Each model combines the features of extended life with high airflow delivery at low noise levels.

Lightweight all-metal contruction is typical of PAMOTOR AC fans. This all-metal construction eliminates breakage and warping often found in conventional plastic fans. This all-metal feature also permits the entire fan to function as a natural heat sink, assuring cooler operation by effectively transferring heat from the rotor into the air stream via the impeller blades. Potential injurious heat is also transferred from the stator to the die-cast venturi by way of the metal struts. Life expectancy: (1) AC fans with sleeve bearings — 20,000 hours at maximum permissible ambient temperature. (2) AC fans with ball bearings — 20,000 hours at 72°C or at the maximum permissible temperature if this is less than 72°C. Note: If the ambient temperature in which the fan operates is 20°C below the above levels, the life expectancy increases by 10,000 hours.

The PAMOTOR exclusive bearing lubrication system incorporates hand-fitted broached sintered iron sleeve bearings on most fans, with precision high-temperature ball bearing versions also available. The dual sleeve bearings are separated by a large oil felt reservoir, which provides continuous fault free circulation of a special lubricant to the shaft and bearing surface.

An efficient, powerful inside-out motor, housed entirely within the impeller hub to conserve axial depth, has higher torque capabilities and a lower internal heat rise than the contemporary fixed shaft designs.

The impeller blades are computer designed and impulse welded to the precision hub and dynamically balanced to within .0001 inches in each end plane to minimize acoustical and mechanical vibrations.

PAMOTOR also offers a super premium grade fan; the PENTAFLOW series (5 year warranty). PENTAFLOW model numbers are 4600XP and 8500DP.

Perhaps the two most important fields of application for PENTAFLOW fans are: (1) in limited-production deluxe equipment, in professional-grade instrumentation, in few-of-a-kind, custom-designed and permanently-installed systems requiring optimum performance and absolute dependability for many years; and (2) as field replacements for retrofit units for original-equipment fans that have proven to be unreliable, are too noisy, or do not produce sufficient cooling airflow.

PAMOTOR fans are Underwriters' Laboratories, Inc. recognized and have their Yellow Card Component Recognition Number E41168. Many are CSA certified and VDE approved.

AC Fans Quick Selection Guide

Model	Operating Voltage	Frequency	Airflow	Frame Size
	VAC	Hz	cfm	inches
Shaded Pole Fans				
2500S	115	50/60	115	4-1/2 sq. × 2 D
2550S	230	50/60	115	
4600X	115	50/60	120	4-11/16 sq. × 1-1/2 D
4600XP	115	50/60	120	
4606X*	115	50/60	120	
4650X	230	50/60	120	
4656X*	230	50/60	120	
4800X	115	50/60	70	
4850X	230	50/60	70	
7600S	115	50/60	240	6 dia. × 2-3/16 D
7606*	115	50/60	240	
7650S	230	50/60	240	
7656*	230	50/60	240	
8500D	115	50/60	40	3-1/8 sq. × 1-1/2 D
8500DP	115	50/60	40	
8506D*	115	50/60	40	
8550D	230	50/60	40	
8556D*	230	50/60	40	
8800D	115	50/60	27	
8850D	230	50/60	27	
Induction Type Fans				
900†	24-42	50/60	20-27	3-1/8 dia. × 1-1/2 D
950†	24	50/60	40	3 dia. × 1-1/2 D
970T†	20-28	50/60	18-21	2-7/16 dia. × 1-5/16 D
971TR†	12	50/60	15	2-7/16 dia. × 1-5/16 D
6008S*	115	50/60	250	6-3/4 dia. × 2 D
6058S*	230	50/60	250	6-3/4 dia. × 2 D
Radial Blower				
RL90-18/00	115	50/60	25	4-3/4 × 4-3/4 × 1-1/2 D

*High temperature ball bearing models.
†Models 900, 950, 970T and 971TR require an additional capacitor.

Model 900 3⅛" Sub-Miniature Induction Fan

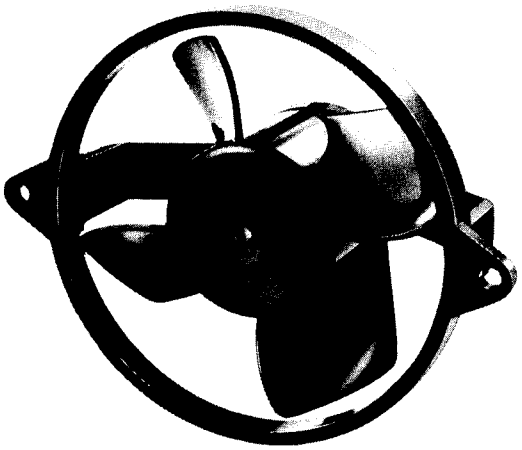

Dimensions
(in inches)

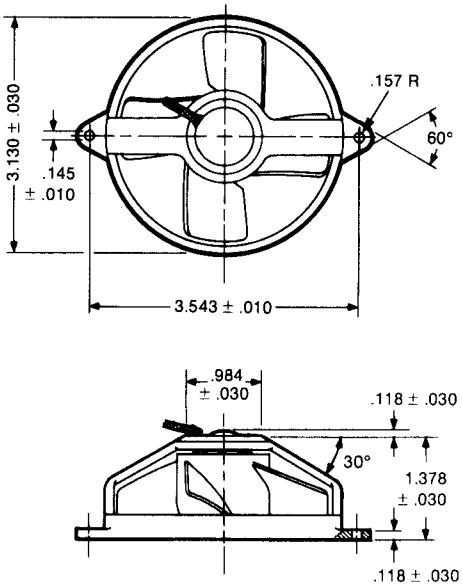

FEATURES:

- UL recognized.
- CSA available.
- VDE approved.
- Conforms to IEC specifications.
- Sleeve, broached sintered iron bearing system.
- Long operating life without maintenance.
- 24 to 42 VAC 50/60 Hz.

GENERAL DESCRIPTION

This bulletin describes the electrical and mechanical parameters of the PAMOTOR Model 900 axial fan.

PERFORMANCE CHARACTERISTICS

Airflow. **24 VAC/60 Hz**
20 cfm at 0 Static Pressure
10 cfm at .02 inch H_2O
0 cfm at .03 inch H_2O
(maximum static pressure)

42 VAC/60 Hz
27 cfm at 0 Static Pressure
22 cfm at .02 inch H_2O
0 cfm at .07 inch H_2O
(maximum static pressure)

ACOUSTICAL CHARACTERISTICS

22 dB (A) at 24 VAC/60 Hz
34 dB (A) at 42 VAC/60 Hz
15 dB (SIL) at 24 VAC/60 Hz
26 dB (SIL) at 42 VAC/60 Hz

MECHANICAL CHARACTERISTICS

Venturi Block. The venturi block is made of high strength Trogamid-T.

Impeller. The impeller blades are also made of high strength Trogamid-T and are aerodynamically contoured for optimum pressure/air delivery performance.

Terminals. The 6-inch leads are made of No. 24 AWG UL approved insulated wire.

Bearing System. The sintered iron dual sleeve bearing system has a large oil felt reservoir. This is a sealed bearing system with lubricant guaranteed to –40° C.

Weight. This fan weighs only 5 ounces.

MOTOR

Basic Design. The Model 900 is induction type and requires a 5.6 mfd capacitor.

Rotor Balance. The rotor is dynamically balanced to a maximum shift of the center of gravity of .0004" in each end plane.

Rotation. Counterclockwise, facing the air discharge.

Windings and Splices. The windings and splices are treated with high-temperature varnish and baked at 130°C.

Stator Protection. Stator laminations are treated with high-temperature varnish for protection.

Insulation Resistance. The insulation resistance is ≥5 megohms measured at 500 VDC after 48 hours humidity storage.

Insulation Class. The insulation classification is 120° C.

Dielectric Strength. This fan will withstand 550 VAC RMS for one second at 20° C and 40% relative humidity.

Speed. The speed of the Model 900 is 1700 RPM at 24 VAC/60 Hz and 1650 RPM at 24 VAC/50 Hz; both ratings are with zero static pressure.

ELECTRICAL CHARACTERISTICS

Operating Voltage and Frequency. The Model 900 is designed for operation at 24 to 42 VAC at a frequency of 50/60 Hz.

Power Rating. This fan's power rating is 2.3 watts at 24 VAC/60 Hz and 2.0 watts at 24 VAC/50 Hz. Both ratings are at zero static pressure.

ENVIRONMENTAL CHARACTERISTICS

Operating Temperature Range. This fan is designed to operate over a temperature range of -10°C to +85°C at 24 VAC/60 Hz and -10°C to +55°C at 42 VAC/60 Hz.

QUALITY VERIFICATION

Life Expectancy. The life expectancy of this fan is 20,000 hours at the above maximum operating temperature range.

Safety Codes. The fan has Underwriters' Laboratories, Inc. Yellow Card Component Recognition No. E41168. It is also VDE approved and conforms to IEC standards. CSA certification is available.

Performance Data

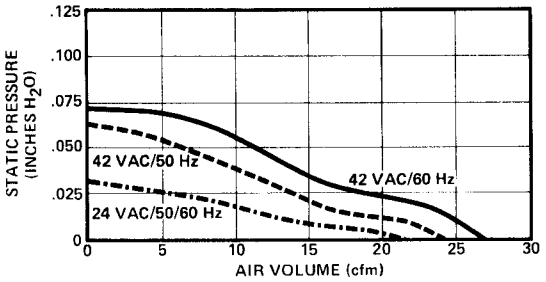

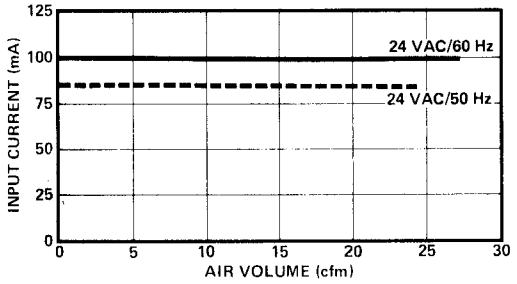

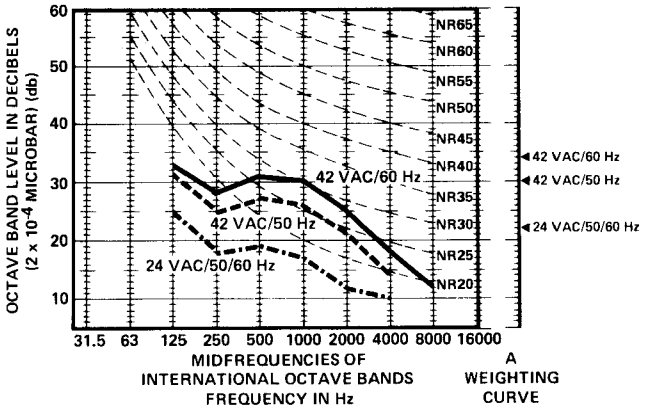

Wiring Diagram

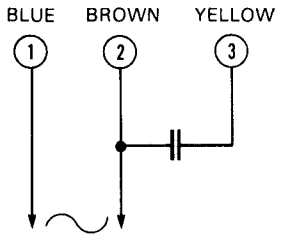

Model 950 3⅛" Hysteresis Synchronous Permanent Split Capacitor Axial Fan

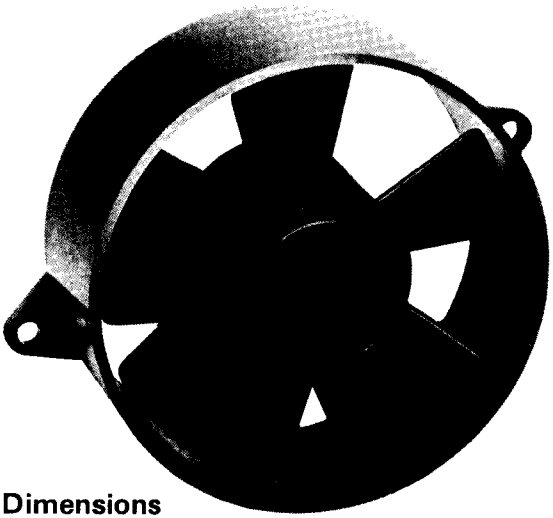

Dimensions
(in inches)

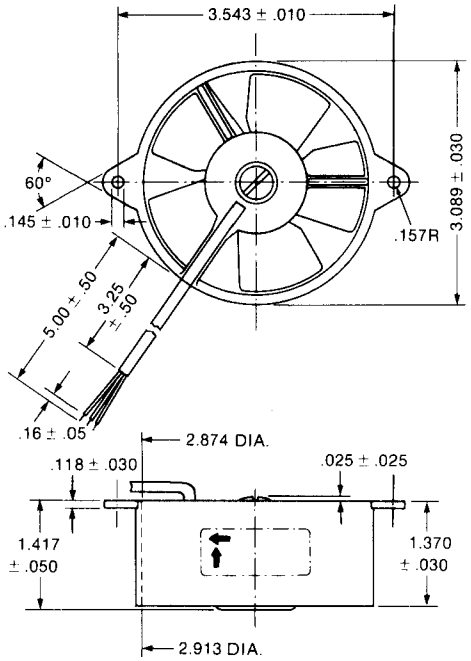

FEATURES:

- UL recognized.
- CSA available.
- VDE approved.
- Conforms to IEC specifications.
- Lightweight - weighs only 5 ounces.
- High air volume, low noise.
- Hysteresis synchronous motor.
- 24 VAC nominal - 20-28 VAC operating range.

GENERAL DESCRIPTION

This bulletin describes the electrical and mechanical parameters of the PAMOTOR Model 950 axial fan.

PERFORMANCE CHARACTERISTICS

Airflow. **24 VAC/60 Hz**
40 cfm at 0 Static Pressure
19 cfm at .05 inch H_2O
0 cfm at .16 inch H_2O
(maximum static pressure)

24 VAC/50 Hz
33 cfm at 0 Static Pressure
14 cfm at .05 inch H_2O
0 cfm at .12 inch H_2O
(maximum static pressure)

ACOUSTICAL CHARACTERISTICS

40 dB (A) at 115 VAC/60 Hz
31 dB (SIL) at 115 VAC/60 Hz

MECHANICAL CHARACTERISTICS

Venturi Block. The venturi block is made of glass-filled polyamide and specifically designed for lightweight, noiseless and efficient airflow.

Impeller. The impeller blades are also made of black polyamide and aerodynamically contoured for optimum pressure/air delivery performance.

Terminals. Three stranded 5-inch leads are provided for electrical connections. They are of No. 24 AWG wire and are UL approved.

Bearing System. The porous sintered iron dual sleeve bearing system has a large oil felt reservoir to increase the life of the fan. This is a sealed bearing system with lubricant guaranteed to -40° C.

Weight. This fan weighs only 5 ounces.

MOTOR

Basic Design. Hysteresis synchronous permanent split capacitor type, requiring a 15 μF capacitor.

Rotor Balance. The rotor is dynamically balanced to a maximum shift of the center of gravity of .0001" in each end plane.

Rotation. Clockwise, facing the air discharge.

Windings and Splices. The windings and splices are treated with high-temperature varnish and baked at 130°C.

Stator Protection. The encapsulated stator is attached to a metal mounting base which functions as a built-in heat sink.

Insulation Resistance. The insulation resistance is ≥5 megohms measured at 500 VDC after 48 hours humidity storage.

Insulation Class. The insulation classification is 120° C.

Dielectric Strength. This fan will withstand 550 VAC RMS for one second at 20° C and 40% relative humidity.

Speed. The speed of the Model 950 is 3000 RPM at 24 VAC/50 Hz and 3550 RPM at 60 Hz, with zero static pressure.

ELECTRICAL CHARACTERISTICS

Operating Voltage and Frequency. The Model 950 is recommended for operation at 24 VAC, either 50 Hz or 60 Hz; however, the fan can be safely used in a voltage range of 20-28 VAC at either frequency.

Power Rating. This fan's power rating is 6.5 watts at 24 VAC/50 Hz or 7.0 watts at 24 VAC/60 Hz, rated at either zero or maximum static pressure.

ENVIRONMENTAL CHARACTERISTICS

Operating Temperature Range. This fan is designed to operate over a temperature range of -10° C to +70° C at 24 VAC/60 Hz.

Acceleration. To achieve full speed at 24 VAC/60 Hz, 5 seconds maximum.

QUALITY VERIFICATION

Life Expectancy. The life expectancy of this fan is 20,000 hours at 70° C.

Safety Codes. The fan has Underwriters' Laboratories, Inc. Yellow Card Component Recognition No. E41168. It is VDE approved, has CSA certification available, and is designed to meet IEC standards.

Performance Data

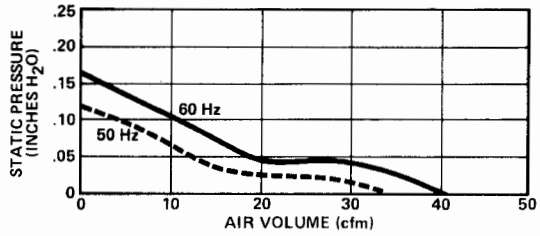

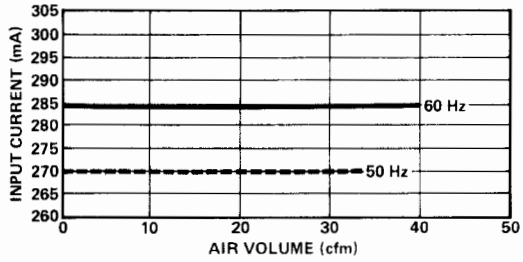

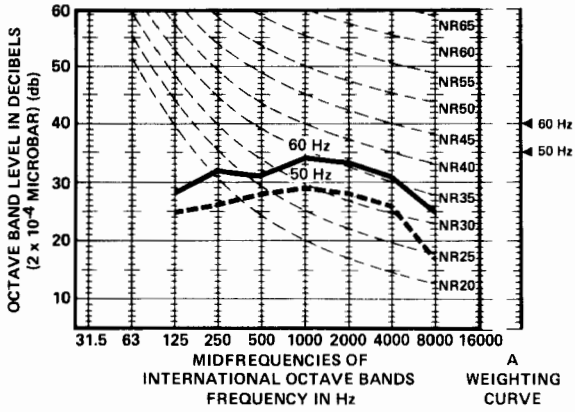

Wiring Diagram

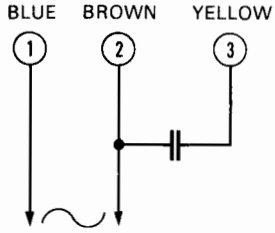

Model 970T Hysteresis Synchronous Permanent Split Capacitor Axial Fan

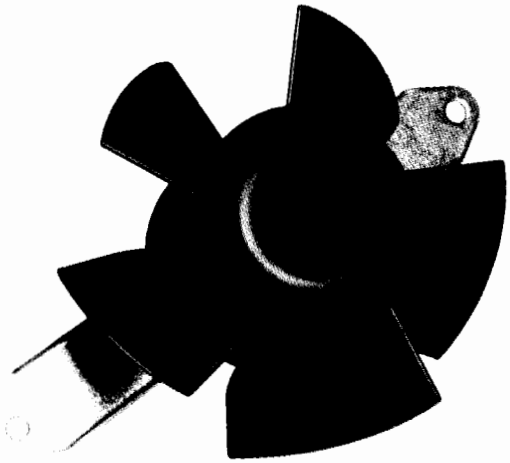

Dimensions
(in inches)

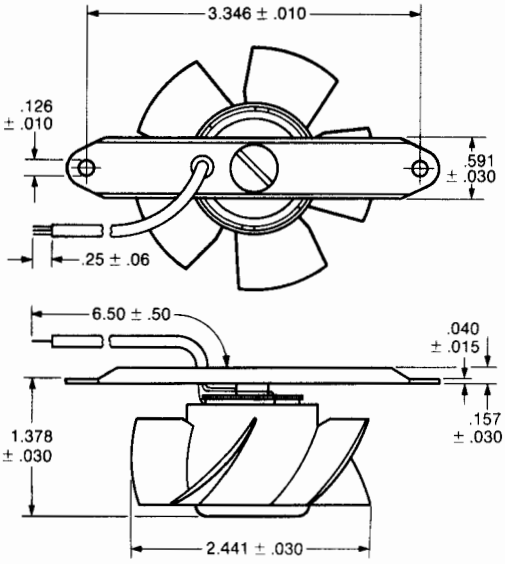

FEATURES:

- **Lightweight — weighs only 5 ounces.**
- **Compact**
- **Open construction.**
- **24VAC nominal.**
- **Low noise.**

GENERAL DESCRIPTION

This bulletin describes the electrical and mechanical parameters of the PAMOTOR Model 970T miniature axial fan.

PERFORMANCE CHARACTERISTICS

Airflow. **24-28 VAC/60Hz**
21 cfm at 0 Static Pressure
12 cfm at .10 inch H_2O
0 cfm at .23 inch H_2O
(maximum static pressure)

20-28 VAC/50 Hz
18 cfm at 0 Static Pressure
9 cfm at .10 inch H_2O
0 cfm at .17 inch H_2O
(maximum static pressure)

ACOUSTICAL CHARACTERISTICS

40 dB (A) at 24-28 VAC/60 Hz
29 dB (SIL) at 24-28 VAC/60 Hz

MECHANICAL CHARACTERISTICS

Impeller. The impeller blades are molded of black, glass-filled plastic and aerodynamically contoured for optimum pressure/air delivery performance.

Flow direction. Mounting bracket on delivery side.

Leads. 6-inch leads of No. 24 AWG insulated wire.

Bearing System. Broached, sintered iron, sleeve bearing system.

Lubrication. This fan is lubricated within the sealed bearing system by a special lubricant permitting extended operation at elevated ambient temperatures.

Weight. This fan weighs only 5 ounces.

MOTOR

Basic Design. The Model 970T has an AC capacitor motor.

Rotor Balance. The rotor is dynamically balanced to a maximum shift of the center of gravity of .0001" in each end plane.

Rotation. Clockwise, facing the air discharge.

Windings and Splices. The windings are treated with high-temperature varnish and are further insulated with individual sleeving.

Stator Protection. Stator laminations are treated with high-temperature varnish for protection against deterioration.

Insulation Resistance. The insulation resistance is ≥5 megohms measured at 500 VDC after 48 hours humidity storage.

Insulation Class. The insulation classification is 120°C.

Dielectric Strength. This fan will withstand 550 VAC RMS for one second at 20° C and 40% relative humidity.

Speed.

20-28 VAC/50 Hz	**24-28 VAC/60 Hz**
3000 RPM	3550 RPM

Horizontal Airflow at Zero Static Pressure

ELECTRICAL CHARACTERISTICS

Operating Voltage. The Model 970T is designed for operation at 20-28 VAC/50 Hz and 24-28 VAC/60 Hz.

Power Rating. This fan's power rating is 6.2 Watts at 24-28 VAC/60 Hz, input power at zero static pressure.

Input Current.

20-28 VAC/50 Hz	**24-28 VAC/60 Hz**
280 mA	240 mA

Zero Static Pressure

Capacitor. 15 μF ± 10%/40 VAC.

ENVIRONMENTAL CHARACTERISTICS

Operating Temperature Range. This fan is designed to operate over a temperature range of -10°C to +70°C at 24 VAC/60 Hz.

QUALITY VERIFICATION

Life Expectancy. The life expectancy of this fan is 20,000 hours at 70° C.

Safety Codes. This fan conforms to UL, CSA, VDE and IEC standards.

Performance Data

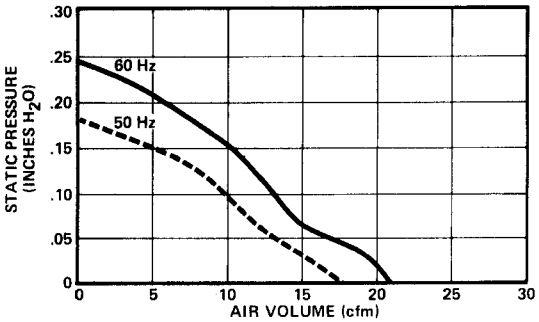

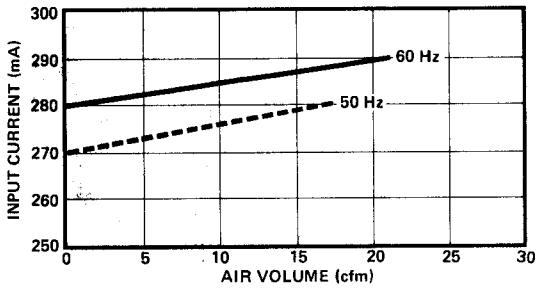

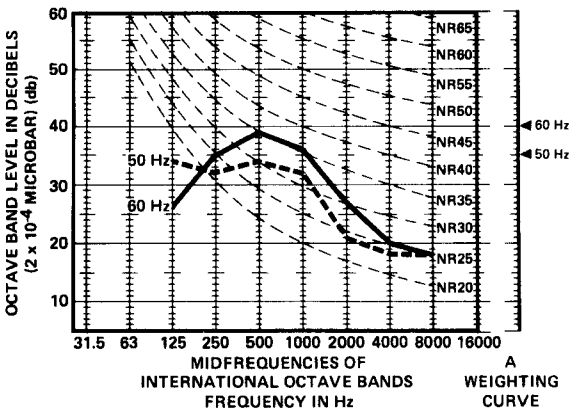

Wiring Diagram

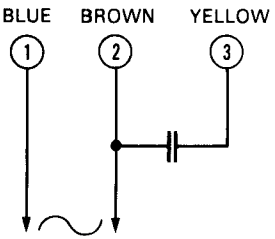

Model 971TR Permanent Split Capacitor Axial Fan

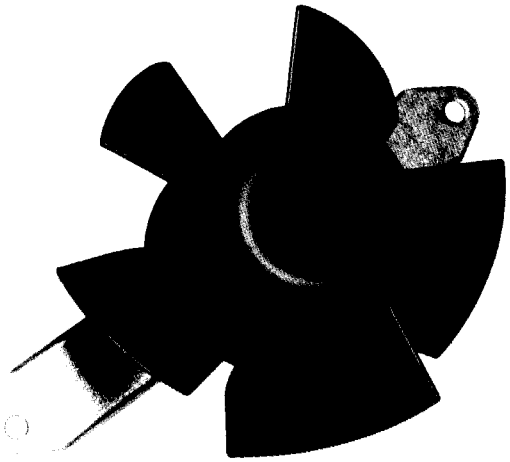

Dimensions
(in inches)

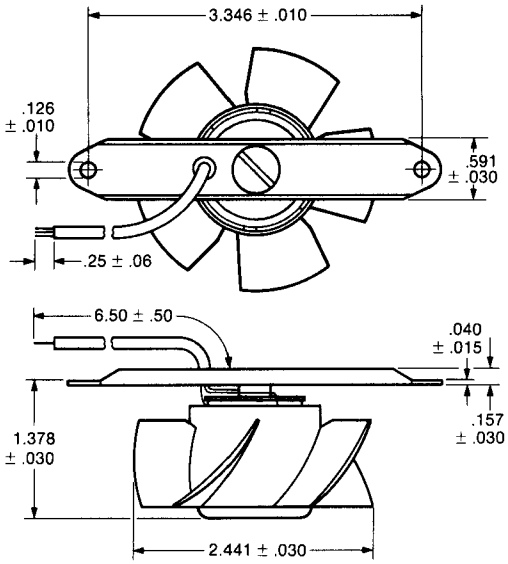

FEATURES:

- **Lightweight — weighs only 5 ounces.**
- **Compact**
- **Open construction.**
- **12VAC nominal.**
- **Low noise.**

GENERAL DESCRIPTION

This bulletin describes the electrical and mechanical parameters of the PAMOTOR Model 971TR miniature axial fan.

PERFORMANCE CHARACTERISTICS

Airflow. **12 VAC, 50/60Hz**
15 cfm at 0 Static Pressure
0 cfm at .09 inch H_2O
(maximum static pressure)

ACOUSTICAL CHARACTERISTICS

30 dB (A) at 12 VAC, 50/60 Hz
21 dB (SIL) at 12 VAC, 50/60 Hz

MECHANICAL CHARACTERISTICS

Impeller. The impeller blades are molded of black, glass-filled plastic and aerodynamically contoured for optimum pressure/air delivery performance.

Flow direction. Mounting bracket on delivery side.

Leads. 6-inch leads of No. 24 AWG insulated wire.

Bearing System. Broached, sintered iron, sleeve bearing system.

Lubrication. This fan is lubricated within the sealed bearing system by a special lubricant permitting extended operation at elevated ambient temperatures.

Weight. This fan weighs only 5 ounces.

MOTOR

Basic Design. The Model 971TR has an AC capacitor motor.

Rotor Balance. The rotor is dynamically balanced to a maximum shift of the center of gravity of .0001" in each end plane.

Rotation. Clockwise, facing the air discharge.

Windings and Splices. The windings are treated with high-temperature varnish and are further insulated with individual sleeving.

Stator Protection. Stator laminations are treated with high-temperature varnish for protection against deterioration.

Insulation Resistance. The insulation resistance is ≥5 megohms measured at 500 VDC after 48 hours humidity storage.

Insulation Class. The insulation classification is 120°C.

Dielectric Strength. This fan will withstand 550 VAC RMS for one second at 20° C and 40% relative humidity.

Speed. 12 VAC, 50/60 Hz, 2400 RPM.

ELECTRICAL CHARACTERISTICS

Operating Voltage. The Model 971TR is designed for operation at 12VAC ± 15%, 50/60 Hz.

Power Rating. This fan's power rating is 7 Watts at 12 VAC/60 Hz input power at zero static pressure.

Input Current. 12 VAC/60 Hz, 560 mA, at zero static pressure

Capacitor. 68μF±10%/35 VAC

ENVIRONMENTAL CHARACTERISTICS

Operating Temperature Range. This fan is designed to operate over a temperature range of -10°C to +70°C at 12 VAC/60 Hz.

QUALITY VERIFICATION

Life Expectancy. The life expectancy of this fan is 20,000 hours at 70°C.

Safety Codes. This fan conforms to UL, CSA, VDE and IEC standards.

Performance Data

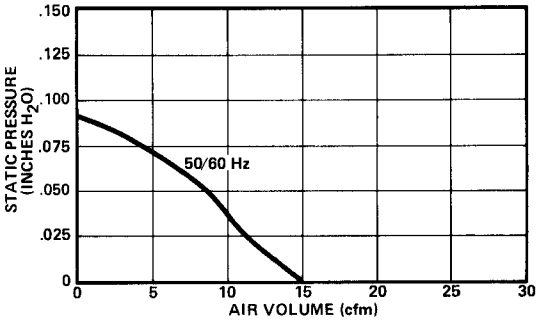

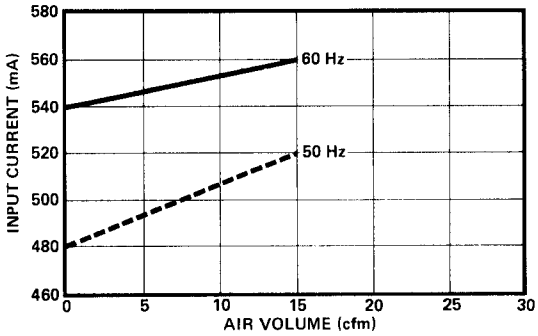

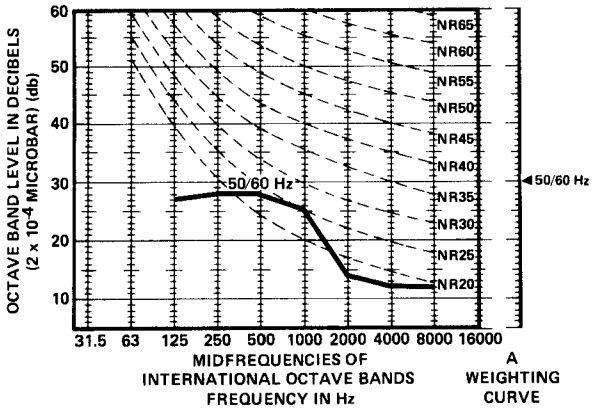

Wiring Diagram

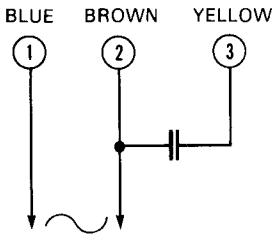

Model 2500S 4 11/16" All Metal Shaded-Pole Axial Fan

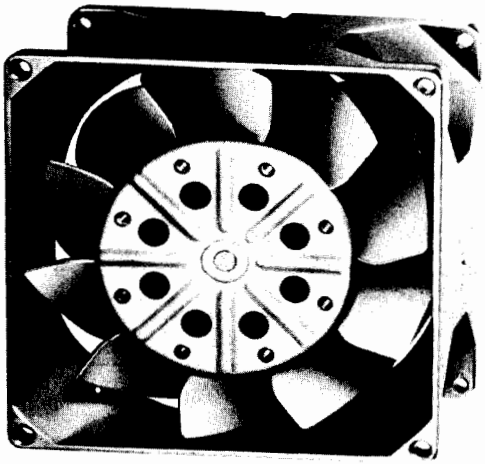

Dimensions
(in inches)

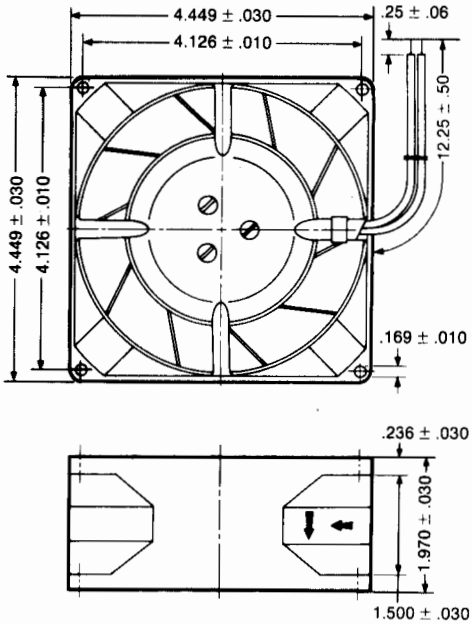

FEATURES:

- **UL recognized.**
- **CSA certified.**
- **Conforms to IEC and VDE safety specifications.**
- **Sleeve, broached sintered iron bearing system.**
- **Long operating life without maintenance.**
- **115 VAC, 50/60 Hz.**

GENERAL DESCRIPTION

This bulletin describes the electrical and mechanical parameters of the PAMOTOR Model 2500S miniature axial fan, intended for general cooling purposes in electronic, military, medical, industrial and data processing systems.

PERFORMANCE CHARACTERISTICS

Airflow. **115 VAC/60 Hz**
115 cfm at 0 Static Pressure
100 cfm at .10 inch H_2O
0 cfm at .49 inch H_2O
(maximum static pressure)

115 VAC/50 Hz
94 cfm at 0 Static Pressure
80 cfm at .10 inch H_2O
0 cfm at .36 inch H_2O
(maximum static pressure)

ACOUSTICAL CHARACTERISTICS

59 db (A) at 115 VAC/60 Hz
54 dB (A) at 115 VAC/50 Hz
42 dB (SIL) at 115 VAC/60 Hz
38 dB (SIL) at 115 VAC/50 Hz

MECHANICAL CHARACTERISTICS

Venturi Block. The venturi block is made of die-cast aluminum alloy, and is specifically designed for lightweight, noiseless, efficient airflow and rapid heat dissipation.

Impellers. The impellers are all-metal, impulse welded to the rotor and aerodynamically contoured for optimum pressure/air delivery performance.

Finish. This fan is protected by a moisture resistant black finish.

Leads. The insulated leads are UL and CSA approved No. 18 AWG tinned, stranded copper wire, 12.25" ± .50" long.

Bearing System. The dual sleeve, broached sintered iron bearing system has a large oil felt reservoir between the sleeve bearings. It also has a thrust bearing for increased operational life in a horizontal plane installation.

Lubrication. Model 2500S is lubricated within the sealed bearing system by a special lubricant permitting extended operation at elevated ambient temperatures and is guaranteed to -40° C.

Weight. Despite its all-metal construction, this fan weighs only 32 ounces.

MOTOR

Basic Design. Inside-out, shaded-pole motor, thermally protected.

Rotor Balance. The rotor is dynamically balanced to a maximum shift of the center of gravity of .0001" in each end plane.

Rotation. Counterclockwise, facing the air discharge.

Windings and Splices. The windings are treated with high-temperature varnish and baked at 130°C. Splices are also treated with high-temperature varnish and are further insulated with individual sleeving.

Stator Protection. Stator laminations are treated with high-temperature varnish for protection against deterioration.

Insulation Resistance. The insulation resistance is ≥5 megohms measured at 500 VDC after 48 hours humidity storage.

Insulation Class. The insulation classification is 120° C.

Dielectric Strength. This fan will withstand 1650 VAC RMS for one second at 20° C and 40% relative humidity.

Speed. The speed of the this fan is 3300 RPM at 115 VAC/60 Hz and 2800 RPM at 115 VAC/50 Hz at zero static pressure.

ELECTRICAL CHARACTERISTICS

Operating Voltage and Frequency. This fan is recommended for operation on 105 to 125 VAC at a frequency of 60 Hz and 100 to 125 VAC at a frequency of 50 Hz.

Power Rating. The power rating of this fan is 27 watts at 115 VAC/60 Hz and 31 watts at 115 VAC/50 Hz.

ENVIRONMENTAL CHARACTERISTICS

Operating Temperature Range. This fan is designed to operate over a temperature range of -10° C to +55° C at 115 VAC/60 Hz.

Acceleration. To achieve full speed at 115 VAC, 30 seconds maximum.

QUALITY VERIFICATION

Life Expectancy. The life expectancy of this fan is 20,000 hours at 55° C.

Safety Codes. The fan has Underwriters' Laboratories, Inc. Yellow Card Component Recognition No. E41168. It is also CSA certified and conforms to IEC and VDE standards.

Performance Data

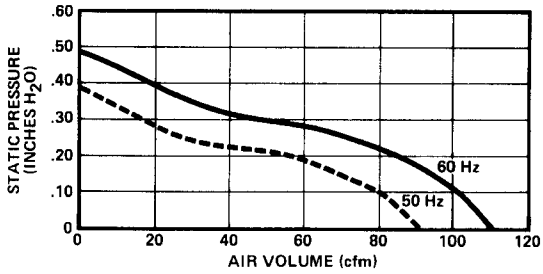

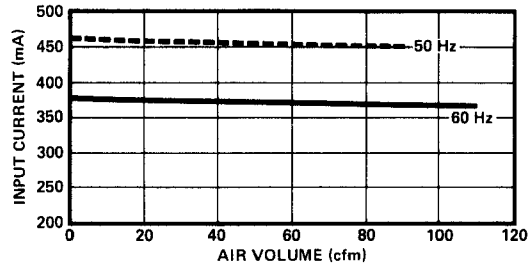

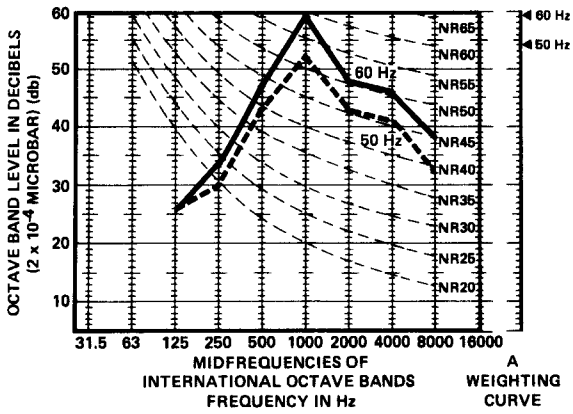

MOUNTING DIMENSIONS

Please see Drawing 1, page 136 of this catalog.

ACCESSORIES

PAMOTOR offers a full line of accessory items for its fans. Please refer to pages 140-141 of this catalog.

Model 2550S 4 11/16" All Metal Shaded-Pole Axial Fan

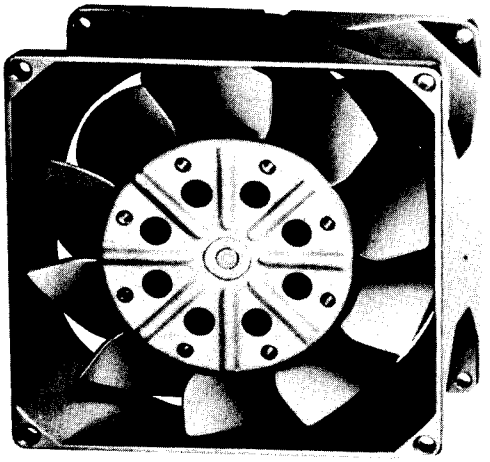

Dimensions
(in inches)

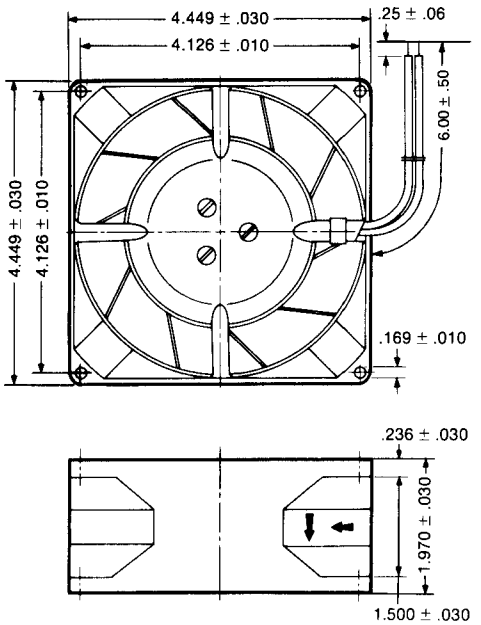

FEATURES:

- UL recognized.
- CSA certified.
- Conforms to IEC and VDE safety specifications.
- Sleeve, broached sintered iron bearing system.
- Long operating life without maintenance.
- 220/230 VAC, 50/60 Hz.

GENERAL DESCRIPTION

This bulletin describes the electrical and mechanical parameters of the PAMOTOR Model 2550S miniature axial fan, intended for general cooling purposes in electronic, military, medical, industrial and data processing systems.

PERFORMANCE CHARACTERISTICS

Airflow. **230 VAC/60 Hz**
115 cfm at 0 Static Pressure
100 cfm at .10 inch H_2O
0 cfm at .49 inch H_2O
(maximum static pressure)

220 VAC/50 Hz
94 cfm at 0 Static Pressure
80 cfm at .10 inch H_2O
0 cfm at .36 inch H_2O
(maximum static pressure)

ACOUSTICAL CHARACTERISTICS

59 db (A) at 230 VAC/60 Hz
54 dB (A) at 220 VAC/50 Hz
42 dB (SIL) at 230 VAC/60 Hz
38 dB (SIL) at 220 VAC/50 Hz

MECHANICAL CHARACTERISTICS

Venturi Block. The venturi block is made of die-cast aluminum alloy, and is specifically designed for lightweight, noiseless, efficient airflow and rapid heat dissipation.

Impellers. The impellers are all-metal, impulse welded to the rotor and aerodynamically contoured for optimum pressure/air delivery performance.

Finish. This fan is protected by a moisture resistant black finish.

Leads. The insulated leads are UL and CSA approved No. 18 AWG tinned, stranded copper wire, 6" ± 50" long.

Bearing System. The dual sleeve, broached sintered iron bearing system has a large oil felt reservoir between the sleeve bearings. It also has a thrust bearing for increased operational life in a horizontal plane installation.

Lubrication. Model 2550S is lubricated within the sealed bearing system by a special lubricant permitting extended operation at elevated ambient temperatures and is guaranteed to -40° C.

Weight. Despite its all-metal construction, this fan weighs only 32 ounces.

MOTOR

Basic Design. Inside-out, shaded-pole motor, thermally protected.

Rotor Balance. The rotor is dynamically balanced to a maximum shift of the center of gravity of .0001" in each end plane.

Rotation. Counterclockwise, facing the air discharge.

Windings and Splices. The windings are treated with high-temperature varnish and baked at 130°C. Splices are also treated with high-temperature varnish and are further insulated with individual sleeving.

Stator Protection. Stator laminations are treated with high-temperature varnish for protection against deterioration.

Insulation Resistance. The insulation resistance is ≥5 megohms measured at 500 VDC after 48 hours humidity storage.

Insulation Class. The insulation classification is 120° C.

Dielectric Strength. This fan will withstand 1650 VAC RMS for one second at 20° C and 40% relative humidity.

Speed. The speed of the this fan is 3300 RPM at 230 VAC/60 Hz and 2800 RPM at 220 VAC/50 Hz at zero static pressure.

ELECTRICAL CHARACTERISTICS

Operating Voltage and Frequency. This fan is designed for operation on 198 to 253 VAC at a frequency of 60 Hz and 198 to 242 VAC at a frequency of 50 Hz. Rated voltage is 220 VAC at 50 Hz and 230 VAC at 60 Hz.

Power Rating. The power rating of this fan is 27 watts at 230 VAC/60 Hz and 27 watts at 220 VAC/50 Hz at free air delivery.

ENVIRONMENTAL CHARACTERISTICS

Operating Temperature Range. This fan is designed to operate over a temperature range of -10°C to +55°C at 230 VAC/60 Hz.

Acceleration. To achieve full speed at 230 VAC, 30 seconds maximum.

QUALITY VERIFICATION

Life Expectancy. The life expectancy of this fan is 20,000 hours at 55°C.

Safety Codes. The fan has Underwriters' Laboratories, Inc. Yellow Card Component Recognition No. E41168. It is also CSA certified and conforms to IEC and VDE standards.

Performance Data

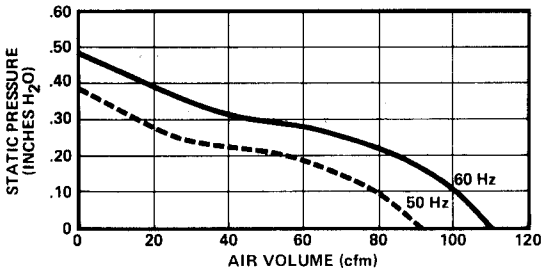

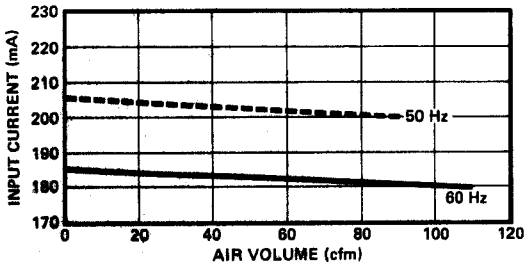

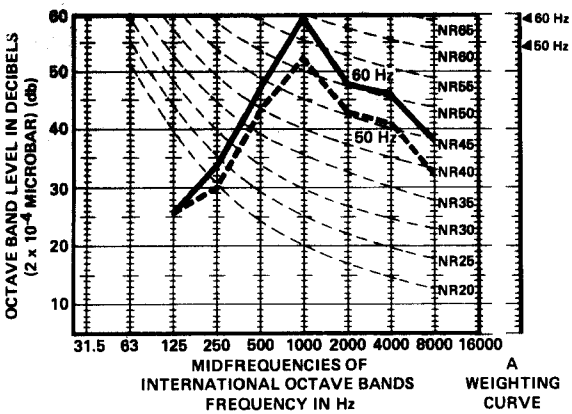

MOUNTING DIMENSIONS

Please see Drawing 1, page 136 of this catalog.

ACCESSORIES

PAMOTOR offers a full line of accessory items for its fans. Please refer to pages 140-141 of this catalog.

Model 4600X 4 11/16" All Metal Shaded-Pole Axial Fan

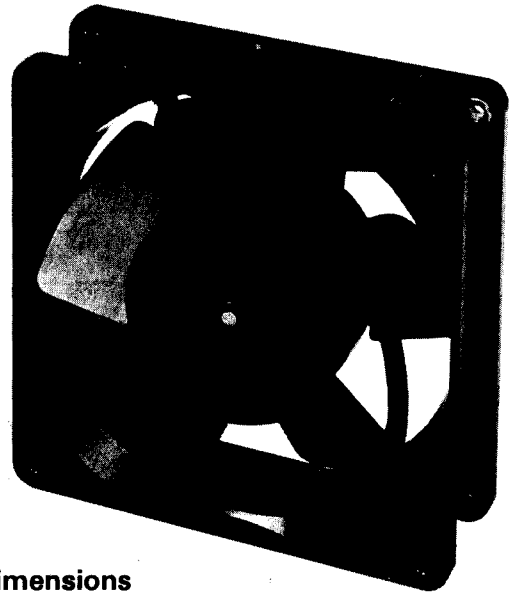

Dimensions
(in inches)

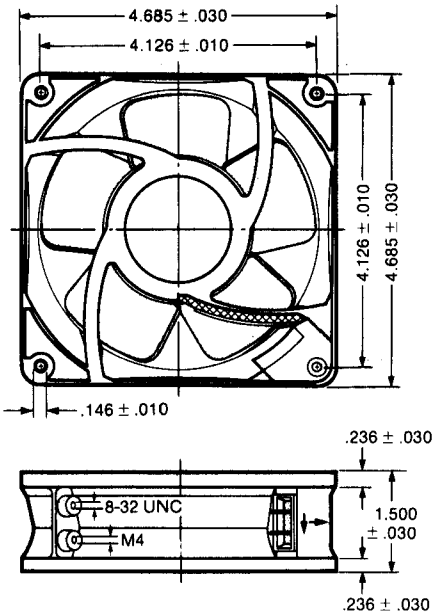

FEATURES:

- UL recognized.
- CSA certified.
- VDE approved.
- Conforms to IEC specifications.
- Sleeve, broached sintered iron bearing system.
- Long operating life without maintenance.
- 115 VAC, 50/60 Hz.

GENERAL DESCRIPTION

This bulletin describes the electrical and mechanical parameters of the PAMOTOR Model 4600X miniature axial fan.

PERFORMANCE CHARACTERISTICS

Airflow. **115 VAC/60 Hz**
120 cfm at 0 Static Pressure
108 cfm at .10 inch H_2O
0 cfm at .40 inch H_2O
(maximum static pressure)

115 VAC/50 Hz
100 cfm at 0 Static Pressure
80 cfm at .10 inch H_2O
0 cfm at .30 inch H_2O
(maximum static pressure)

ACOUSTICAL CHARACTERISTICS

50 db (A) at 115 VAC/60 Hz
40 dB (SIL) at 115 VAC/60 Hz

MECHANICAL CHARACTERISTICS

Venturi Block. The venturi block is made of die-cast aluminum alloy, and is specifically designed for light-weight, noiseless, efficient airflow and rapid heat dissipation.

Impeller. The impeller blades are all-metal impulse welded to the rotor and aerodynamically contoured for optimum pressure/air delivery performance.

Finish. This fan is protected by a moisture resistant black finish.

Terminals. Terminals are designed for use with No. 18 AWG wire or a quick disconnect plug and cord assembly, PAMOTOR Part No. 5505. Two ground positions are also provided, one 8-32 UNC and one M4.

Bearing System. The dual sleeve, broached sintered iron bearing system has a large oil felt reservoir between the sleeve bearings. It also has a thrust bearing for increased operational life in a horizontal plane installation.

Lubrication. Model 4600X is lubricated within the sealed bearing system by a special lubricant permitting extended operation at elevated ambient temperatures.

Weight. Despite its all-metal construction, this fan weighs only 20 ounces.

MOTOR

Basic Design. Inside-out, shaded-pole motor, impedance protected.

Rotor Balance. The rotor is dynamically balanced to a maximum shift of the center of gravity of .0001" in each end plane.

Rotation. Clockwise, facing the air discharge.

Windings and Splices. The windings are treated with high-temperature varnish and baked at 130°C. Splices are also treated with high-temperature varnish and are further insulated with individual sleeving.

Stator Protection. Stator laminations are treated with high-temperature varnish for protection against deterioration.

Insulation Resistance. The insulation resistance is ≥5 megohms measured at 500 VDC after 48 hours humidity storage.

Insulation Class. The insulation classification is 120° C.

Dielectric Strength. This fan will withstand 1650 VAC RMS for one second at 20° C and 40% relative humidity.

Speed. The speed of the Model 4600X is 3100 RPM at 115 VAC/60 Hz with zero static pressure.

ELECTRICAL CHARACTERISTICS

Operating Voltage and Frequency. Model 4600X is recommended for operation at 105 to 125 VAC at a frequency of 60 Hz, or 100 to 125 VAC at 50 Hz. Its rated voltage is 115 VAC.

Power Rating. The power rating of this fan is 18 watts at 115 VAC/60 Hz, zero static pressure.

ENVIRONMENTAL CHARACTERISTICS

Operating Temperature Range. This fan is designed to operate over a temperature range of -10°C to +65°C at 115 VAC/60 Hz.

Acceleration. To achieve full speed at 115 VAC/60 Hz, 30 seconds maximum.

QUALITY VERIFICATION

Life Expectancy. The life expectancy of this fan is 20,000 hours at 65°C.

Safety Codes. The fan has Underwriters' Laboratories, Inc. Yellow Card Component Recognition No. E41168. It is also CSA certified, VDE approved and is designed to meet IEC standards.

Performance Data

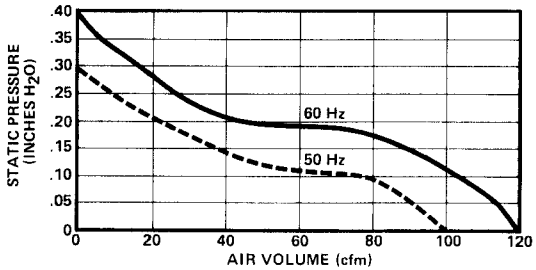

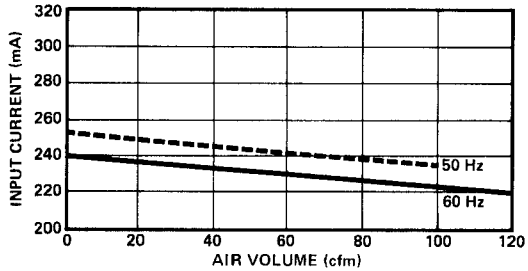

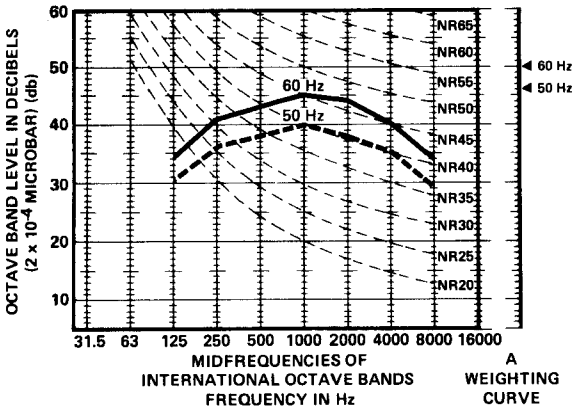

MOUNTING DIMENSIONS

Please see Drawing 2, page 136 of this catalog.

ACCESSORIES

PAMOTOR offers a full line of accessory items for its fans. Please refer to pages 140-141 of this catalog.

Model 4600XP 4 11/16" All Metal Shaded-Pole Axial Fan

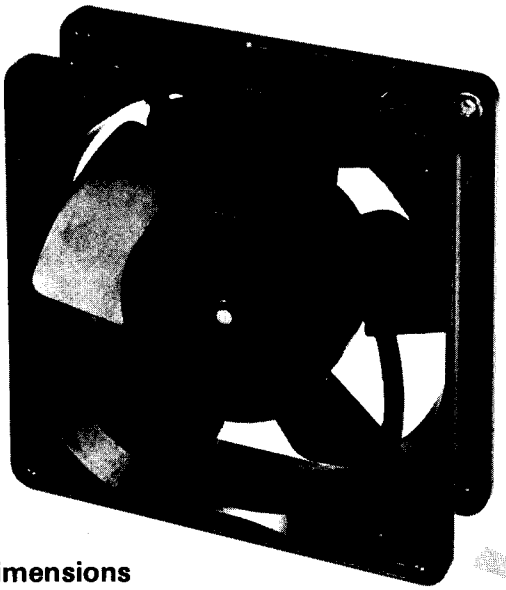

Dimensions
(in inches)

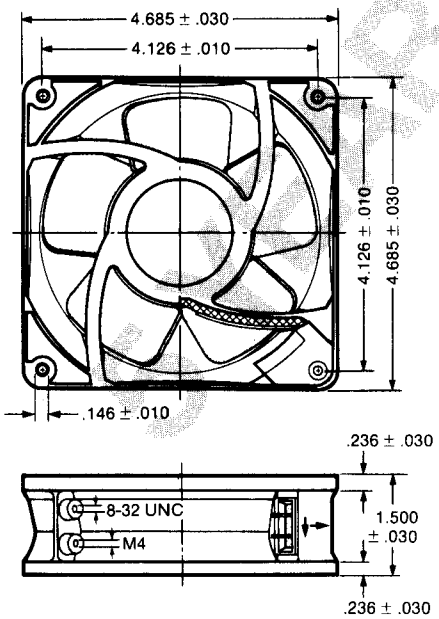

FEATURES:

- 5-year warranty
- UL recognized.
- CSA certified.
- VDE approved.
- Conforms to IEC specifications.
- Sleeve, broached sintered iron bearing system.
- 115 VAC, 50/60 Hz.

GENERAL DESCRIPTION

This bulletin describes the electrical and mechanical parameters of the PAMOTOR Model 4600XP miniature axial fan. While electrically and mechanically similar to Model 4600X, this PENTAFLOW series fan possesses important additional proprietary design features for extended long life, optimized performance, and highest reliability. Accordingly, Model 4600XP carries a full 5-year warranty against defects in materials and workmanship.

PERFORMANCE CHARACTERISTICS

Airflow. **115 VAC/60 Hz**
120 cfm at 0 Static Pressure
108 cfm at .10 inch H_2O
0 cfm at .40 inch H_2O
(maximum static pressure)

115 VAC/50 Hz
100 cfm at 0 Static Pressure
80 cfm at .10 inch H_2O
0 cfm at .30 inch H_2O
(maximum static pressure)

ACOUSTICAL CHARACTERISTICS

50 db (A) at 115 VAC/60 Hz
40 dB (SIL) at 115 VAC/60 Hz

MECHANICAL CHARACTERISTICS

Venturi Block. The venturi block is made of die-cast aluminum alloy, and is specifically designed for light-weight, noiseless, efficient airflow and rapid heat dissipation.

Impeller. The impeller blades are all-metal impulse welded to the rotor and aerodynamically contoured for optimum pressure/air delivery performance.

Finish. This fan is protected by a moisture resistant black finish.

Terminals. Terminals are designed for use with No. 18 AWG wire or a quick disconnect plug and cord assembly, PAMOTOR Part No. 5505. Two ground positions are also provided, one 8-32 UNC and one M4.

Bearing System. The dual sleeve, broached sintered iron bearing system has a large oil felt reservoir between the sleeve bearings. It also has a thrust bearing for increased operational life in a horizontal plane installation.

5-YEAR WARRANTY

Lubrication. Model 4600XP is lubricated within the sealed bearing system by a special lubricant permitting extended operation at elevated ambient temperatures.

Weight. Despite its all-metal construction, this fan weighs only 20 ounces.

MOTOR

Basic Design. Inside-out, shaded-pole motor, impedance protected.

Rotor Balance. The rotor is dynamically balanced to a maximum shift of the center of gravity of .0001" in each end plane.

Rotation. Clockwise, facing the air discharge.

Windings and Splices. The windings are treated with high-temperature varnish and baked at 130°C. Splices are also treated with high-temperature varnish and are further insulated with individual sleeving.

Stator Protection. Stator laminations are treated with high-temperature varnish for protection against deterioration.

Insulation Resistance. The insulation resistance is ≥5 megohms measured at 500 VDC after 48 hours humidity storage.

Insulation Class. The insulation classification is 120° C.

Dielectric Strength. This fan will withstand 1650 VAC RMS for one second at 20° C and 40% relative humidity.

Speed. The speed of the Model 4600XP is 3100 RPM at 115 VAC/60 Hz with zero static pressure.

ELECTRICAL CHARACTERISTICS

Operating Voltage and Frequency. Model 4600XP is recommended for operation at 105 to 125 VAC at a frequency of 60 Hz, or 100 to 125 VAC at 50 Hz. Its rated voltage is 115 VAC.

Power Rating. The power rating of this fan is 18 watts at 115 VAC/60 Hz, zero static pressure.

ENVIRONMENTAL CHARACTERISTICS

Operating Temperature Range. This fan is designed to operate over a temperature range of -10°C to +65°C at 115 VAC/60 Hz.

Acceleration. To achieve full speed at 115 VAC/60 Hz, 30 seconds maximum.

QUALITY VERIFICATION

Life Expectancy. The life expectancy of this fan is 20,000 hours at 65°C.

Safety Codes. The fan has Underwriters' Laboratories, Inc. Yellow Card Component Recognition No. E41168. It is also CSA certified, VDE approved and is designed to meet IEC standards.

Performance Data

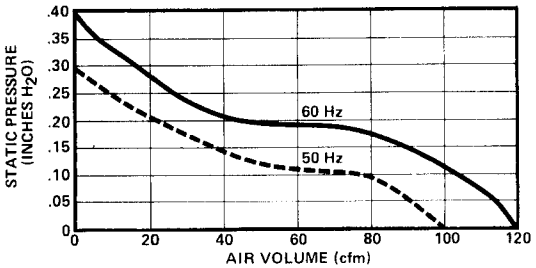

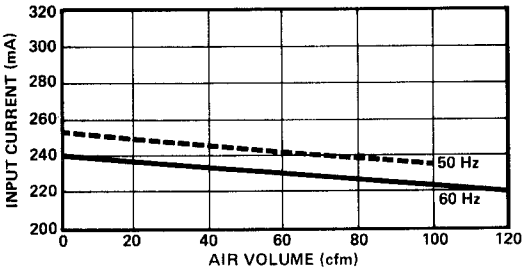

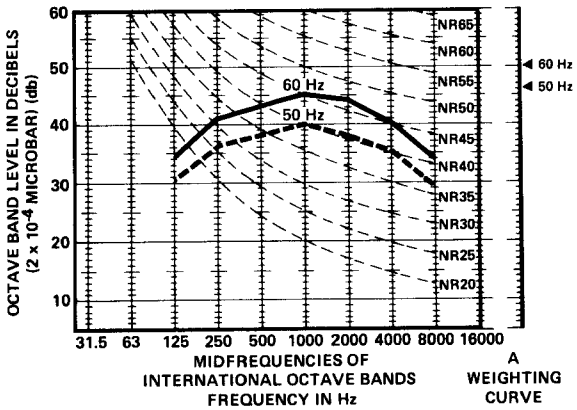

MOUNTING DIMENSIONS

Please see Drawing 2, page 136 of this catalog.

ACCESSORIES

PAMOTOR offers a full line of accessory items for its fans. Please refer to pages 140-141 of this catalog.

Model 4606X 4 11/16" All Metal Shaded-Pole Axial Fan

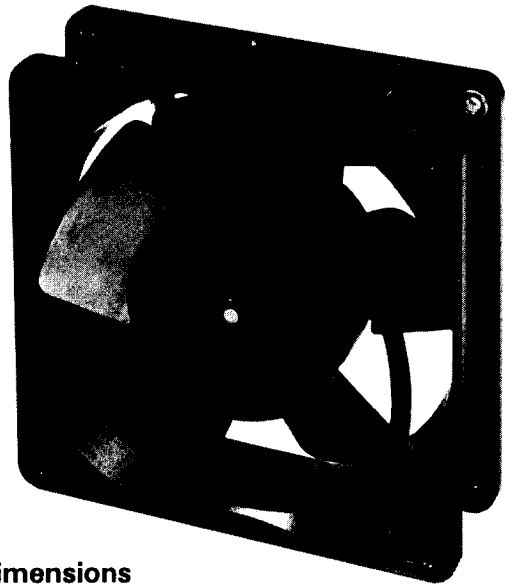

Dimensions
(in inches)

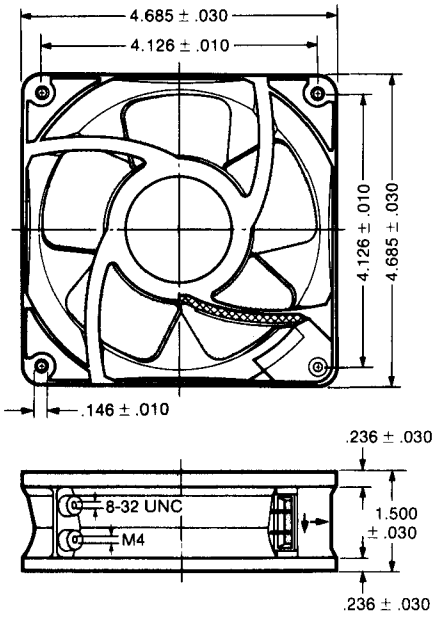

FEATURES:

- UL recognized.
- CSA certified.
- VDE approved.
- Conforms to IEC safety specifications.
- Precision ball bearing system.
- All-metal construction.
- 115 VAC, 50/60 Hz.

GENERAL DESCRIPTION

This bulletin describes the electrical and mechanical parameters of the PAMOTOR Model 4606X ball bearing miniature axial fan intended for general and special cooling purposes in commercial and industrial electronic systems.

PERFORMANCE CHARACTERISTICS

Airflow. **115 VAC/60 Hz**
120 cfm at 0 Static Pressure
108 cfm at .10 inch H_2O
0 cfm at .40 inch H_2O
(maximum static pressure)

115 VAC/50 Hz
100 cfm at 0 Static Pressure
80 cfm at .10 inch H_2O
0 cfm at .30 inch H_2O
(maximum static pressure)

ACOUSTICAL CHARACTERISTICS

51 dB (A) at 115 VAC/60 Hz
47 dB (A) at 115 VAC/50 Hz
41 dB (SIL) at 115 VAC/60 Hz
37 dB (SIL) at 115 VAC/50 Hz

MECHANICAL CHARACTERISTICS

Venturi Block. The venturi block is made of die-cast aluminum alloy, and is specifically designed for light-weight, noiseless, efficient airflow and rapid heat dissipation.

Impeller. The impeller blades are all-metal impulse welded to the rotor and aerodynamically contoured for optimum pressure/air delivery performance.

Finish. This fan is protected by a moisture resistant black finish.

Terminals. Terminals are designed for use with No. 18 AWG wire or a quick disconnect plug and cord assembly, PAMOTOR Part No. 5505.

Bearing System. The precision ball bearing system ensures long life in a high-temperature environment, and provides maximum shock and vibration resistance.

Lubrication. Model 4606X is lubricated within the sealed bearing system by a special lubricant permitting extended operation at elevated ambient temperatures of 85° C.

Weight. Despite its all-metal construction, this fan weighs only 20 ounces.

MOTOR

Basic Design. Inside-out, shaded-pole motor, impedance protected.

Rotor Balance. The rotor is dynamically balanced to a maximum shift of the center of gravity of .0001" in each end plane.

Rotation. Clockwise, facing the air discharge.

Windings and Splices. The windings are treated with high-temperature varnish and baked at 130°C. Splices are also treated with high-temperature varnish and are further insulated with individual sleeving.

Stator Protection. Stator laminations are treated with high-temperature varnish for protection against deterioration.

Insulation Resistance. The insulation resistance is ≥5 megohms measured at 500 VDC after 48 hours humidity storage.

Insulation Class. The insulation classification is 155° C.

Dielectric Strength. This fan will withstand 1650 VAC RMS for one second at 20° C and 40% relative humidity.

Speed. The speed of the Model 4606X is 3170 RPM at 115 VAC/60 Hz, and 2720 RPM at 115 VAC/50 Hz with zero static pressure.

ELECTRICAL CHARACTERISTICS

Operating Voltage and Frequency. Model 4606X is recommended for operation on 105 to 125 VAC at a frequency of 60 Hz, and 100 to 125 VAC at a frequency of 50 Hz. Rated voltage is 115 VAC.

Power Rating. The power rating of this fan is 17.5 watts at 115 VAC/60 Hz, and 19.5 watts at 115 VAC/50 Hz, with zero static pressure.

ENVIRONMENTAL CHARACTERISTICS

Operating Temperature Range. This fan is designed to operate over a temperature range of -40°C to +85°C at 115 VAC/60 Hz.

Acceleration. To achieve full speed at 115 VAC, 30 seconds maximum.

QUALITY VERIFICATION

Life Expectancy. The life expectancy of this fan is 20,000 hours at 72°C.

Safety Codes. The Model 4606X has Underwriters' Laboratories, Inc. Yellow Card Component Recognition No. E41168. It is also CSA certified, VDE approved and conforms to IEC standards.

Performance Data

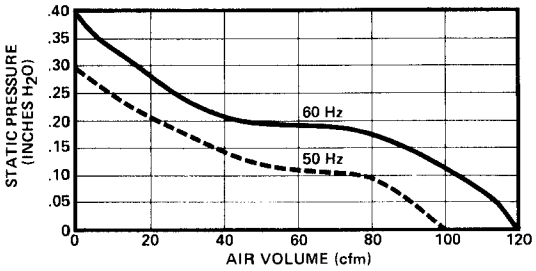

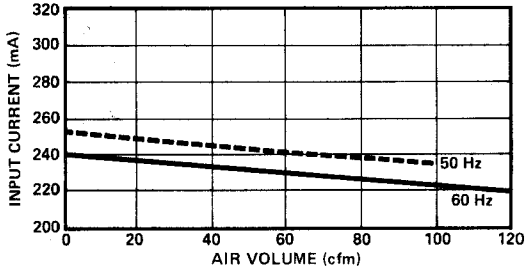

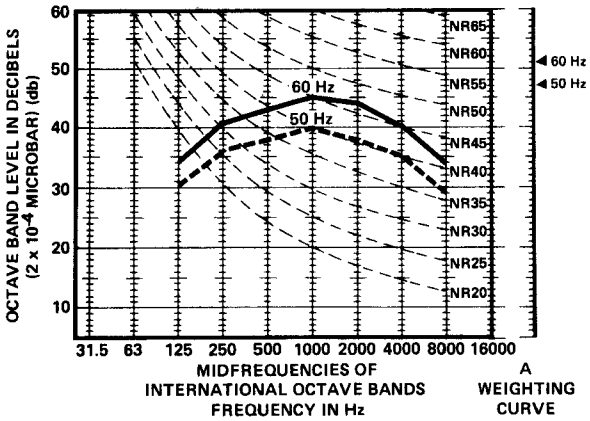

MOUNTING DIMENSIONS

Please see Drawing 2, page 136 of this catalog.

ACCESSORIES

PAMOTOR offers a full line of accessory items for its fans. Please refer to pages 140-141 of this catalog.

Model 4650X 4 11/16" All Metal Shaded-Pole Axial Fan

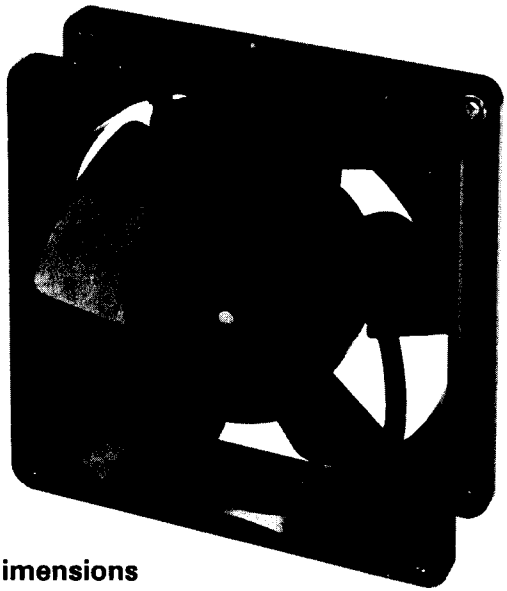

Dimensions
(in inches)

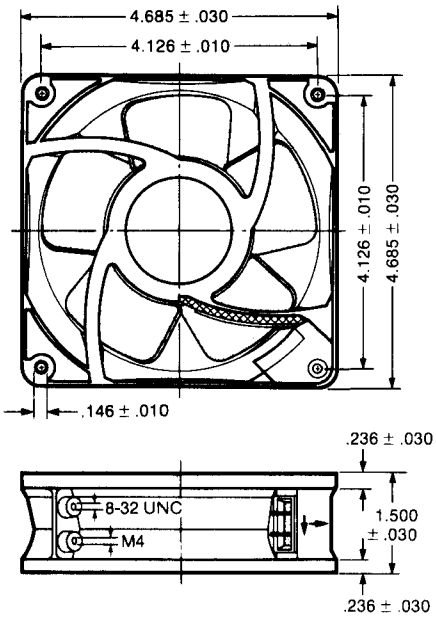

FEATURES:

- UL recognized.
- CSA certified.
- VDE approved.
- Conforms to IEC safety specifications.
- Sleeve, broached sintered iron bearing system.
- Long operating life without maintenance.
- 220/230 VAC, 50/60 Hz.

GENERAL DESCRIPTION

This bulletin describes the electrical and mechanical parameters of the PAMOTOR Model 4650X miniature axial fan.

PERFORMANCE CHARACTERISTICS

Airflow. **230 VAC/60 Hz**
120 cfm at 0 Static Pressure
108 cfm at .10 inch H_2O
0 cfm at .40 inch H_2O
(maximum static pressure)

220 VAC/50 Hz
100 cfm at 0 Static Pressure
80 cfm at .10 inch H_2O
0 cfm at .30 inch H_2O
(maximum static pressure)

ACOUSTICAL CHARACTERISTICS

50 dB (A) at 230 VAC/60 Hz
46 dB (A) at 220 VAC/50 Hz
40 db (SIL) at 230 VAC/60 Hz
36 dB (SIL) at 220 VAC/50 Hz

MECHANICAL CHARACTERISTICS

Venturi Block. The venturi block is made of die-cast aluminum alloy, and is specifically designed for light-weight, noiseless, efficient airflow and rapid heat dissipation.

Impeller. The impeller blades are all-metal impulse welded to the rotor and aerodynamically contoured for optimum pressure/air delivery performance.

Finish. This fan is protected by a moisture resistant black finish.

Terminals. Terminals are designed for use with No. 18 AWG wire or a quick disconnect plug and cord assembly, PAMOTOR Part No. 5505.

Bearing System. The dual sleeve, broached sintered iron bearing system has a large oil felt reservoir between the sleeve bearings. It also has a thrust bearing for increased operational life in a horizontal plane installation.

Lubrication. Model 4650X is lubricated within the sealed bearing system by a special lubricant permitting extended operation at elevated ambient temperatures.

Weight. Despite its all-metal construction, this fan weighs only 20 ounces.

MOTOR

Basic Design. Inside-out, shaded-pole motor, impedance protected.

Rotor Balance. The rotor is dynamically balanced to a maximum shift of the center of gravity of .0001" in each end plane.

Rotation. Clockwise, facing the air discharge.

Windings and Splices. The windings are treated with high-temperature varnish and baked at 130°C. Splices are also treated with high-temperature varnish and are further insulated with individual sleeving.

Stator Protection. Stator laminations are treated with high-temperature varnish for protection against deterioration.

Insulation Resistance. The insulation resistance is ≥5 megohms measured at 500 VDC after 48 hours humidity storage.

Insulation Class. The insulation classification is 120° C.

Dielectric Strength. This fan will withstand 1650 VAC RMS for one second at 20° C and 40% relative humidity.

Speed. The speed of the Model 4650X is 3100 RPM at 230 VAC/60 Hz, and 2680 RPM at 220 VAC/50 Hz, zero static pressure.

ELECTRICAL CHARACTERISTICS

Operating Voltage and Frequency. Model 4650X is designed for operations at 198 to 242 VAC at a frequency of 50 Hz, and 207 to 253 VAC at a frequency of 60 Hz. Rated voltage is 220 VAC, 50 Hz and 230 VAC, 60 Hz.

Power Rating. The power rating of this fan is 17 watts at 230 VAC/60 Hz, zero static pressure.

ENVIRONMENTAL CHARACTERISTICS

Operating Temperature Range. This fan is designed to operate over a temperature range of -10°C to +65°C at 230 VAC/60 Hz.

Acceleration. To achieve full speed at 230 VAC/60 Hz, 30 seconds maximum.

QUALITY VERIFICATION

Life Expectancy. The life expectancy of this fan is 20,000 hours at 65° C.

Safety Codes. The fan has Underwriters' Laboratories, Inc. Yellow Card Component Recognition No. E41168. It is also CSA certified, VDE approved and conforms to IEC safety standards.

Performance Data

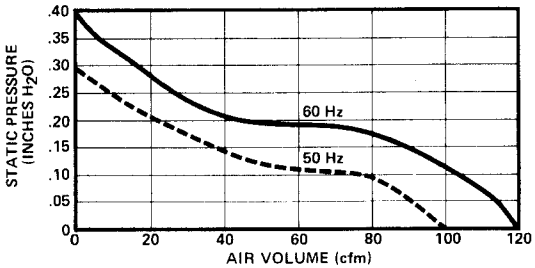

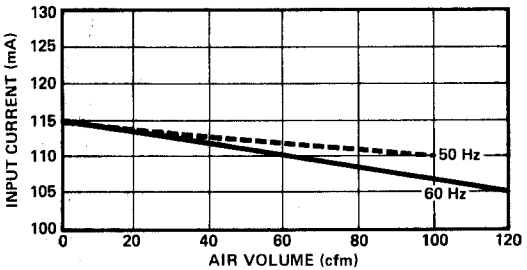

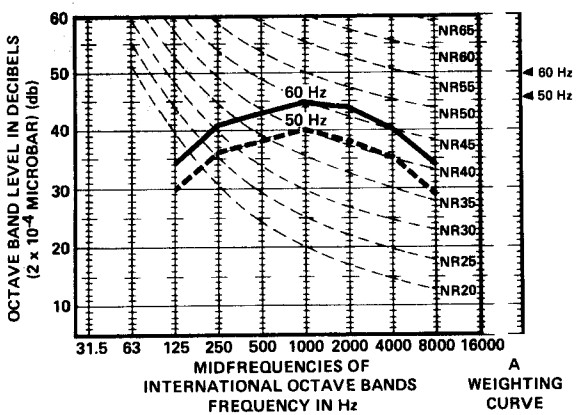

MOUNTING DIMENSIONS

Please see Drawing 2, page 136 of this catalog.

ACCESSORIES

PAMOTOR offers a full line of accessory items for its fans. Please refer to pages 140-141 of this catalog.

Model 4656X 4 11/16" All Metal Shaded-Pole Axial Fan

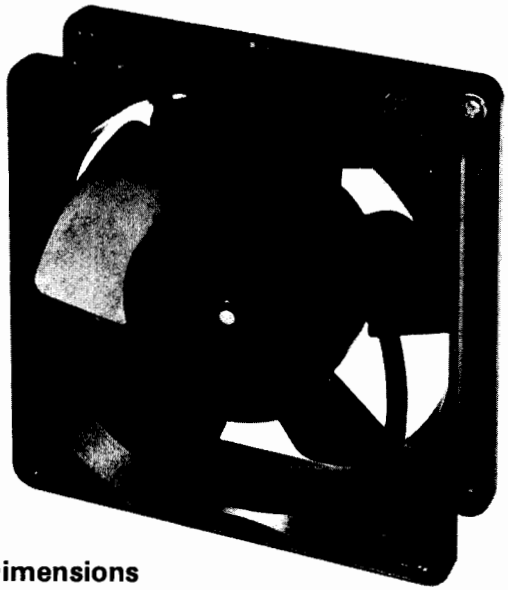

Dimensions
(in inches)

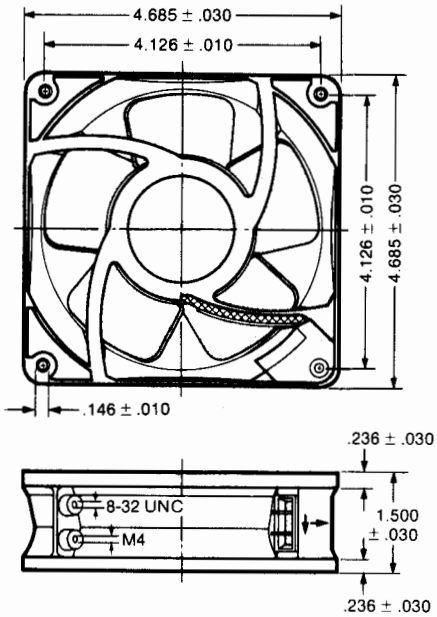

FEATURES:

- UL recognized.
- CSA certified.
- VDE approved.
- Conforms to IEC specifications.
- Precision ball bearing system.
- Long operating life without maintenance.
- 220/230 VAC, 50/60 Hz.

GENERAL DESCRIPTION

This bulletin describes the electrical and mechanical parameters of the PAMOTOR Model 4656X miniature axial fan.

PERFORMANCE CHARACTERISTICS

Airflow. **230 VAC/60 Hz**
120 cfm at 0 Static Pressure
108 cfm at .10 inch H_2O
0 cfm at .40 inch H_2O
(maximum static pressure)

220 VAC/50 Hz
100 cfm at 0 Static Pressure
80 cfm at .10 inch H_2O
0 cfm at .30 inch H_2O
(maximum static pressure)

ACOUSTICAL CHARACTERISTICS

51 dB (A) at 230 VAC/60 Hz
47 dB (A) at 220 VAC/50 Hz
41 db (SIL) at 230 VAC/60 Hz
37 dB (SIL) at 220 VAC/50 Hz

MECHANICAL CHARACTERISTICS

Venturi Block. The venturi block is made of die-cast aluminum alloy, and is specifically designed for light-weight, noiseless, efficient airflow and rapid heat dissipation.

Impeller. The impeller blades are all-metal impulse welded to the rotor and aerodynamically contoured for optimum pressure/air delivery performance.

Finish. This fan is protected by a moisture resistant black finish.

Terminals. Terminals are designed for use with No. 18 AWG wire or a quick disconnect plug and cord assembly, PAMOTOR Part No. 5505.

Bearing System. The dual sleeve broached sintered iron bearing system has a large oil felt reservoir between the sleeve bearings in addition to a thrust bearing for increased operational life in a horizontal plane installation.

Lubrication. Model 4656X is lubricated within the sealed bearing system by a special lubricant permitting extended operation at elevated ambient temperatures.

Weight. Despite its all-metal construction, this fan weighs only 20 ounces.

MOTOR

Basic Design. Inside-out, shaded-pole motor, impedance protected.

Rotor Balance. The rotor is dynamically balanced to a maximum shift of the center of gravity of .0001" in each end plane.

Rotation. Clockwise, facing the air discharge.

Windings and Splices. The windings are treated with high-temperature varnish and baked at 130°C. Splices are also treated with high-temperature varnish and are further insulated with individual sleeving.

Stator Protection. Stator laminations are treated with high-temperature varnish for protection against deterioration.

Insulation Resistance. The insulation resistance is ≥5 megohms measured at 500 VDC after 48 hours humidity storage.

Insulation Class. The insulation classification is 155°C.

Dielectric Strength. This fan will withstand 1650 VAC RMS for one second at 20° C and 40% relative humidity.

Speed. The speed of the Model 4656X is 3150 RPM at 230 VAC/60 Hz, and 2700 RPM at 220 VAC/50 Hz, zero static pressure.

ELECTRICAL CHARACTERISTICS

Operating Voltage and Frequency. Model 4656X is designed for operations at 198 to 242 VAC at a frequency of 50 Hz, and 207 to 253 VAC at a frequency of 60 Hz. Rated voltage is 220 VAC, 50 Hz and 230 VAC, 60 Hz.

Power Rating. The power rating of this fan is 17 watts at 230 VAC/60 Hz, zero static pressure.

ENVIRONMENTAL CHARACTERISTICS

Operating Temperature Range. This fan is designed to operate over a temperature range of -40°C to +85°C at 230 VAC/60 Hz.

Acceleration. To achieve full speed at 230 VAC/60 Hz, 30 seconds maximum.

QUALITY VERIFICATION

Life Expectancy. The life expectancy of this fan is 20,000 hours at 72°C.

Safety Codes. The fan has Underwriters' Laboratories, Inc. Yellow Card Component Recognition No. E41168. It is also CSA certified, VDE approved and conforms to IEC safety standards.

Performance Data

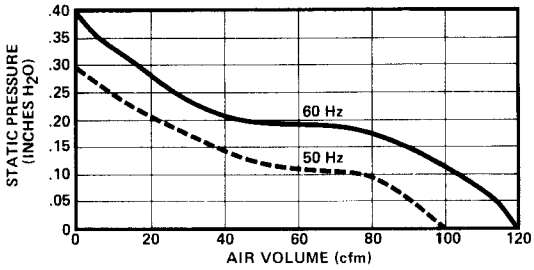

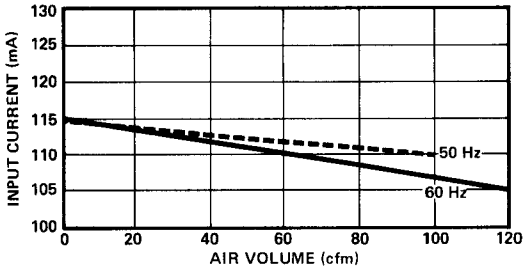

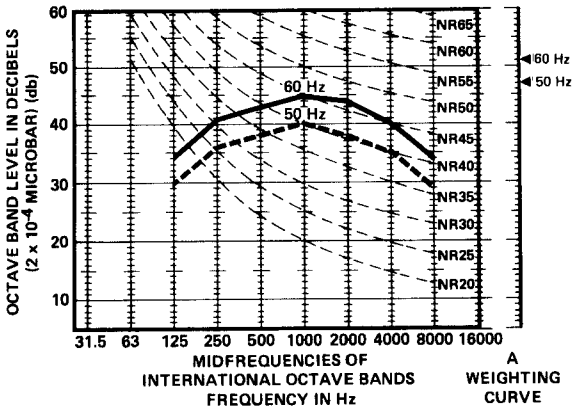

MOUNTING DIMENSIONS

Please see Drawing 2, page 136 of this catalog.

ACCESSORIES

PAMOTOR offers a full line of accessory items for its fans. Please refer to pages 140-141 of this catalog.

Model 4800X 4 11/16" All Metal Shaded-Pole Axial Fan

Dimensions
(in inches)

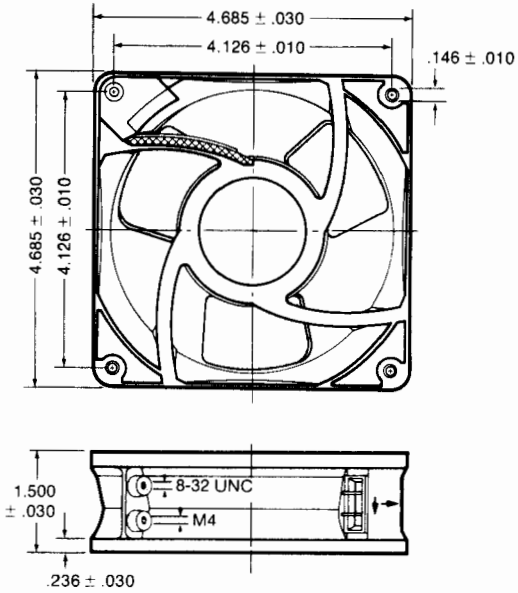

FEATURES:

- UL recognized.
- CSA certified.
- VDE approved.
- Conforms to IEC specifications.
- Sleeve, broached sintered iron bearing system.
- Long operating life without maintenance.
- 115 VAC, 50/60 Hz.

GENERAL DESCRIPTION

This bulletin describes the electrical and mechanical parameters of the PAMOTOR Model 4800X miniature axial fan.

PERFORMANCE CHARACTERISTICS

Airflow. **115 VAC/60 Hz**
70 cfm at 0 Static Pressure
53 cfm at .06 inch H_2O
0 cfm at .14 inch H_2O
(maximum static pressure)

115 VAC/50 Hz
65 cfm at 0 Static Pressure
40 cfm at .06 inch H_2O
0 cfm at .12 inch H_2O
(maximum static pressure)

ACOUSTICAL CHARACTERISTICS

32 db (A) at 115 VAC/50/60 Hz
23 dB (SIL) at 115 VAC/50/60 Hz

MECHANICAL CHARACTERISTICS

Venturi Block. The venturi block is made of die-cast aluminum alloy, and is specifically designed for light-weight, noiseless, efficient airflow and rapid heat dissipation.

Impellers. The impellers are all-metal, impulse welded to the rotor and aerodynamically contoured for optimum pressure/air delivery performance.

Finish. This fan is protected by a moisture resistant black finish.

Terminals. Terminals are designed for use with No. 18 AWG wire or a quick disconnect plug and cord assembly, PAMOTOR Part No. 5505. Two ground positions are also provided, one 8-32 UNC and one M4.

Bearing System. The dual sleeve, broached sintered iron bearing system has a large oil felt reservoir between the sleeve bearings. It also has a thrust bearing for increased operational life in a horizontal plane installation.

Lubrication. The fan is lubricated within the sealed bearing system by a special lubricant permitting operation up to 55° C.

Weight. Despite its all-metal construction, this fan weighs only 19 ounces.

MOTOR

Basic Design. Inside-out, shaded-pole motor, impedance protected.

Rotor Balance. The rotor is dynamically balanced to a maximum shift of the center of gravity of .0001" in each end plane.

Rotation. Clockwise, facing the air discharge.

Windings and Splices. The windings are treated with high-temperature varnish and baked at 130°C. Splices are also treated with high-temperature varnish and are further insulated with individual sleeving.

Stator Protection. Stator laminations are treated with high-temperature varnish for protection against deterioration.

Insulation Resistance. The insulation resistance is ≥5 megohms measured at 500 VDC after 48 hours humidity storage.

Insulation Class. The insulation classification is 120° C.

Dielectric Strength. This fan will withstand 1650 VAC RMS for one second at 20° C and 40% relative humidity.

Speed. The speed of the Model 4800X is 2000 RPM at 115 VAC/60 Hz and 1900 RPM at 115 VAC/50 Hz, zero static pressure.

ELECTRICAL CHARACTERISTICS

Operating Voltage and Frequency. Model 4800X has a rated voltage of 115 VAC. Its voltage range is 100 to 125 VAC at 50 Hz and 105 to 125 VAC at 60 Hz.

Power Rating. The power rating of this fan is 9.5 watts at 115 VAC/60 Hz, and 10 watts at 115 VAC/50 Hz, zero static pressure.

ENVIRONMENTAL CHARACTERISTICS

Operating Temperature Range. This fan is designed to operate over a temperature range of -10°C to +80°C at 115 VAC/60 Hz.

QUALITY VERIFICATION

Life Expectancy. The life expectancy of this fan is 20,000 hours at 80°C.

Safety Codes. The fan has Underwriters' Laboratories, Inc. Yellow Card Component Recognition No. E41168. It is also CSA certified, VDE approved and is designed to meet IEC standards.

Performance Data

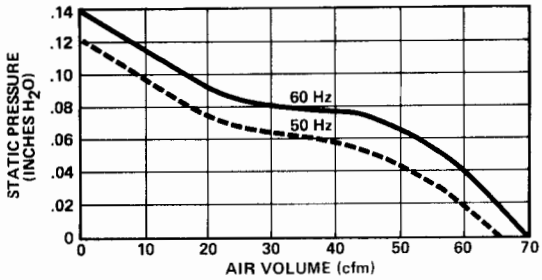

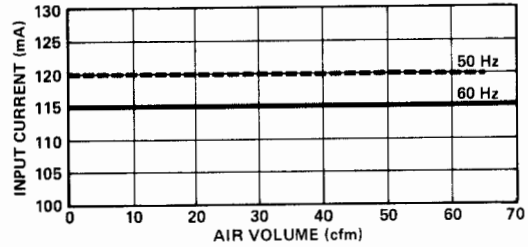

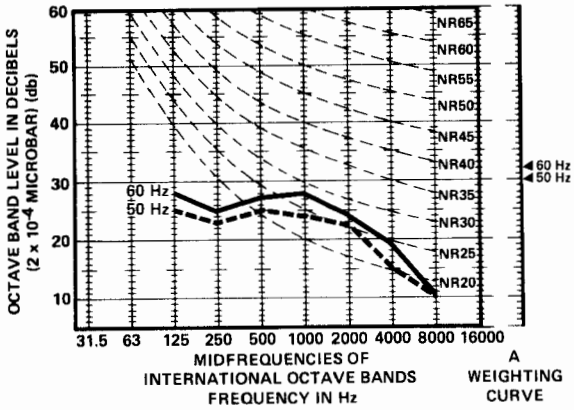

MOUNTING DIMENSIONS

Please see Drawing 2, page 136 of this catalog.

ACCESSORIES

PAMOTOR offers a full line of accessory items for its fans. Please refer to pages 140-141 of this catalog.

Model 4850X 4 11/16" All Metal Shaded-Pole Axial Fan

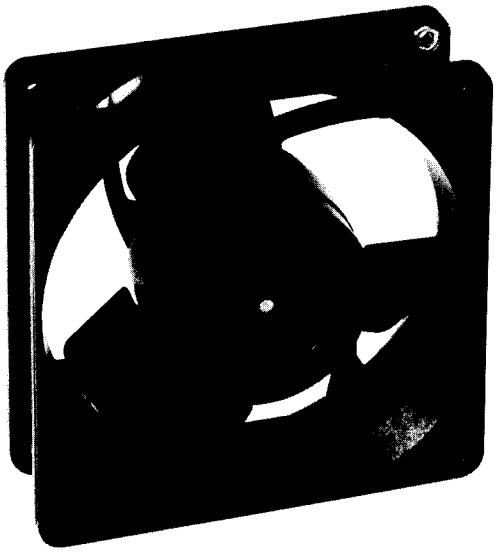

Dimensions
(in inches)

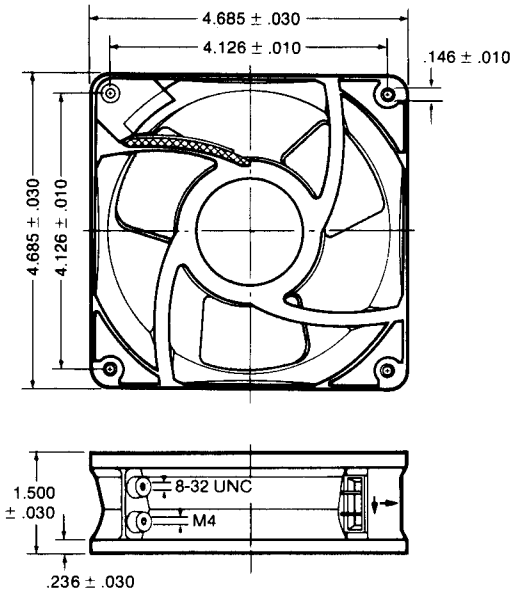

FEATURES:

- UL recognized.
- CSA certified.
- VDE approved.
- Conforms to IEC specifications.
- Sleeve, broached sintered iron bearing system.
- Long operating life without maintenance.
- 230 VAC, 60 Hz; 220 VAC, 50 Hz.

GENERAL DESCRIPTION

This bulletin describes the electrical and mechanical parameters of the PAMOTOR Model 4850X miniature axial fan.

PERFORMANCE CHARACTERISTICS

Airflow. **230 VAC/60 Hz**
70 cfm at 0 Static Pressure
53 cfm at .06 inch H_2O
0 cfm at .14 inch H_2O
(maximum static pressure)

220 VAC/50 Hz
65 cfm at 0 Static Pressure
40 cfm at .10 inch H_2O
0 cfm at .12 inch H_2O
(maximum static pressure)

ACOUSTICAL CHARACTERISTICS

32 db (A) at 115 VAC/50/60 Hz
23 dB (SIL) at 115 VAC/50/60 Hz

MECHANICAL CHARACTERISTICS

Venturi Block. The venturi block is made of die-cast aluminum alloy, and is specifically designed for light-weight, noiseless, efficient airflow and rapid heat dissipation.

Impellers. The impellers are all-metal, impulse welded to the rotor and aerodynamically contoured for optimum pressure/air delivery performance.

Finish. This fan is protected by a moisture resistant black finish.

Terminals. Terminals are designed for use with No. 18 AWG wire or a quick disconnect plug and cord assembly, PAMOTOR Part No. 5505. Two ground positions are also provided, one 8-32 UNC and one M4.

Bearing System. The dual sleeve, broached sintered iron bearing system has a large oil felt reservoir between the sleeve bearings. It also has a thrust bearing for increased operational life in a horizontal plane installation.

Lubrication. The fan is lubricated within the sealed bearing system by a special lubricant permitting operation up to 55° C.

Weight. Despite its all-metal construction, this fan weighs only 19 ounces.

MOTOR

Basic Design. Inside-out, shaded-pole motor, impedance protected.

Rotor Balance. The rotor is dynamically balanced to a maximum shift of the center of gravity of .0001" in each end plane.

Rotation. Clockwise, facing the air discharge.

Windings and Splices. The windings are treated with high-temperature varnish and baked at 130°C. Splices are also treated with high-temperature varnish and are further insulated with individual sleeving.

Stator Protection. Stator laminations are treated with high-temperature varnish for protection against deterioration.

Insulation Resistance. The insulation resistance is ≥5 megohms measured at 500 VDC after 48 hours humidity storage.

Insulation Class. The insulation classification is 120° C.

Dielectric Strength. This fan will withstand 1650 VAC RMS for one second at 20° C and 40% relative humidity.

Speed. The speed of the Model 4850X is 1800 RPM at 115 VAC/60 Hz and 1700 RPM at 115 VAC/50 Hz, zero static pressure.

ELECTRICAL CHARACTERISTICS

Operating Voltage and Frequency. Model 4850X is recommended for operation at 198 to 242 VAC at a frequency of 50 Hz, and 207 to 253 VAC at a frequency of 60 Hz.

Power Rating. The power rating of this fan is 9.5 watts at 230 VAC/60 Hz, zero static pressure.

ENVIRONMENTAL CHARACTERISTICS

Operating Temperature Range. This fan is designed to operate over a temperature range of -10°C to +80°C at 230 VAC/60 Hz.

QUALITY VERIFICATION

Life Expectancy. The life expectancy of this fan is 20,000 hours at 80°C.

Safety Codes. The fan has Underwriters' Laboratories, Inc. Yellow Card Component Recognition No. E41168. It is also CSA certified, VDE approved and is designed to meet IEC standards.

Performance Data

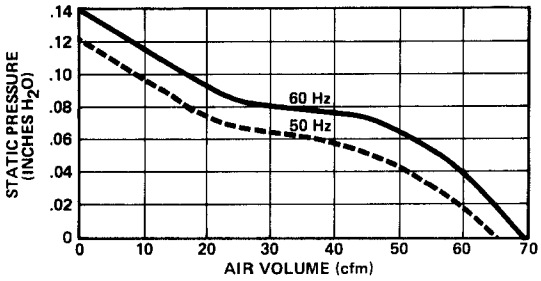

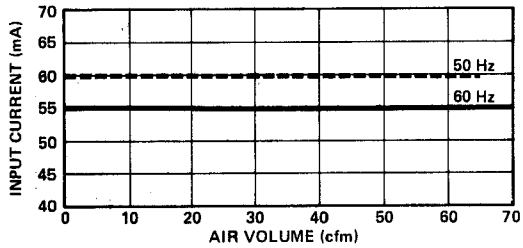

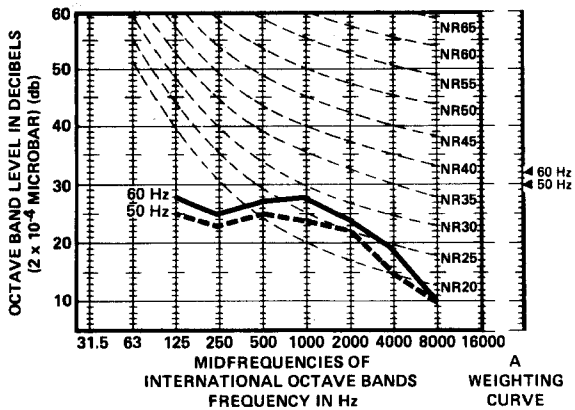

MOUNTING DIMENSIONS

Please see Drawing 2, page 136 of this catalog.

ACCESSORIES

PAMOTOR offers a full line of accessory items for its fans. Please refer to pages 140-141 of this catalog.

Model 6008S 6¾" Permanent Split Capacitor Axial Fan

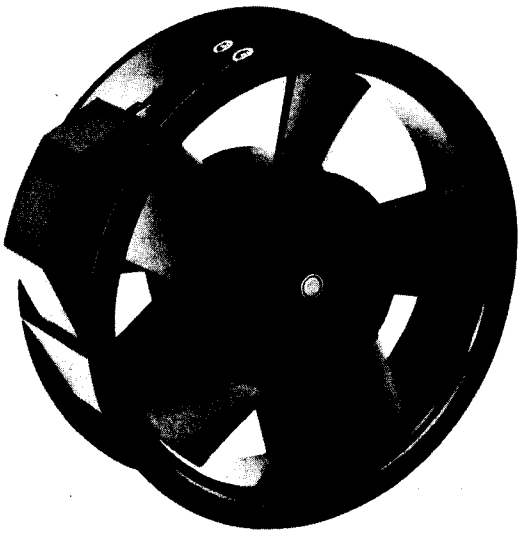

Dimensions
(in inches)

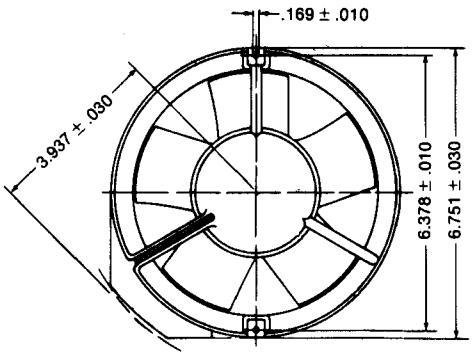

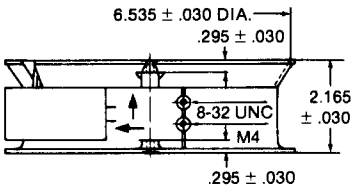

FEATURES:

- UL recognized.
- CSA certified.
- Conforms to IEC and VDE specifications.
- Precision ball bearing system.
- Low power input
- Long operating life without maintenance.
- 115 VAC, 50/60 Hz.

GENERAL DESCRIPTION

This bulletin describes the electrical and mechanical parameters of the PAMOTOR Model 6008S miniature axial fan, intended for general cooling purposes in commercial, medical and industrial electronic systems.

PERFORMANCE CHARACTERISTICS

Airflow. **115 VAC/60 Hz**
250 cfm at 0 Static Pressure
230 cfm at .10 inch H_2O
0 cfm at .70 inch H_2O
(maximum static pressure)

115 VAC/50 Hz
215 cfm at 0 Static Pressure
190 cfm at .10 inch H_2O
0 cfm at .50 inch H_2O
(maximum static pressure)

ACOUSTICAL CHARACTERISTICS

54 dB (A) at 115 VAC/60 Hz
50 dB (A) at 115 VAC/50 Hz
45 dB (SIL) at 115 VAC/60 Hz
41 dB (SIL) at 115 VAC/50 Hz

MECHANICAL CHARACTERISTICS

Venturi Block. The venturi block is made of die-cast aluminum alloy, and is specifically designed for light-weight, noiseless, efficient airflow and rapid heat dissipation.

Impellers. The impellers are molded of black, glass reinforced polyphenylene oxide, aerodynamically contoured for optimum pressure/air delivery performance.

Finish. This fan is protected by a moisture resistant black finish.

Terminals. Terminals are designed for use with No. 18 AWG wire or a quick disconnect plug and cord assembly, PAMOTOR Part No. 5505.

Bearing System. The precision ball bearing system ensures long life in a high-temperature environment, and provides maximum shock and vibration resistance.

Lubrication. Model 6008S is lubricated within the sealed bearing system by a special lubricant permitting extended operation at elevated ambient temperatures and is guaranteed to -40°C.

Weight. This fan weighs only 38 ounces.

MOTOR

Basic Design. Two-pole, permanent split capacitor type motor, thermally protected.

Rotor Balance. Dynamically balanced to a maximum shift of the center of gravity of .0001" in each end plane.

Rotation. Clockwise, facing the air discharge.

Windings and Splices. The windings are treated with high-temperature varnish and baked at 130°C. Splices are also treated with high-temperature varnish and are further insulated with individual sleeving.

Stator Protection. Stator laminations are treated with high-temperature varnish for protection against deterioration.

Insulation Resistance. The insulation resistance is ≥5 megohms measured at 500 VDC after 48 hours humidity storage.

Insulation Class. The insulation classification is 130°C.

Dielectric Strength. This fan will withstand 1650 VAC RMS for one second at 20° C and 40% relative humidity.

Speed. The speed of this fan is 3400 RPM at 115 VAC/60 Hz, and 2900 RPM at 115 VAC/50 Hz, zero static pressure.

ELECTRICAL CHARACTERISTICS

Operating Voltage and Frequency. Model 6008S is designed to operate between 90 and 132 VAC at either 50 or 60 Hz. The fan is rated at 115 VAC.

Power Rating. The power rating of this fan at rated voltage is 23.5 watts at 50 Hz, and 26.5 watts at 60 Hz, zero static pressure.

ENVIRONMENTAL CHARACTERISTICS

Operating Temperature Range. This fan is designed to operate over a temperature range of -40° C to +80° C at 115 VAC/60 Hz.

QUALITY VERIFICATION

Life Expectancy. The life expectancy of this fan is 20,000 hours at 72° C.

Safety Codes. The fan has Underwriters' Laboratories, Inc. Yellow Card Component Recognition No. E41168. It is also CSA certified and conforms to IEC and VDE standards.

Performance Data

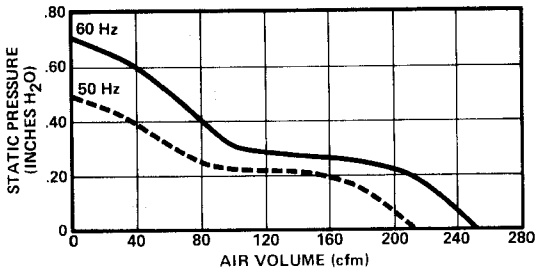

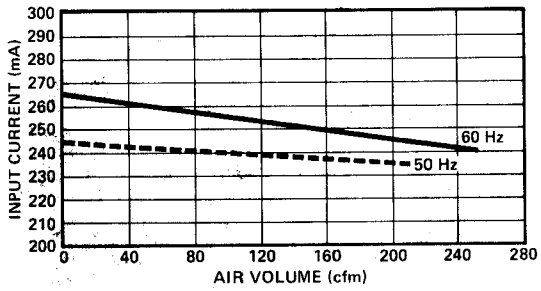

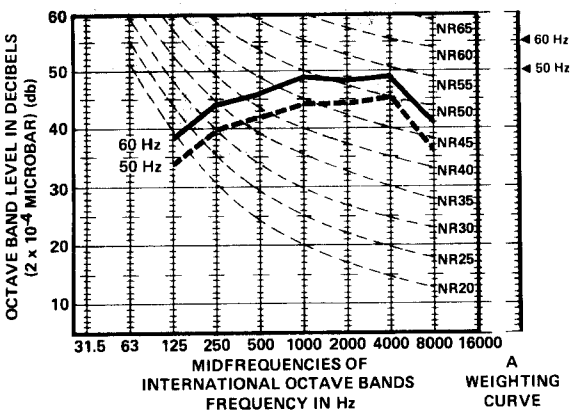

MOUNTING DIMENSIONS

Please see Drawing 5, page 137 of this catalog.

ACCESSORIES

PAMOTOR offers a full line of accessory items for its fans. Please refer to pages 140-141 of this catalog.

Model 6058S 6¾" Permanent Split Capacitor Axial Fan

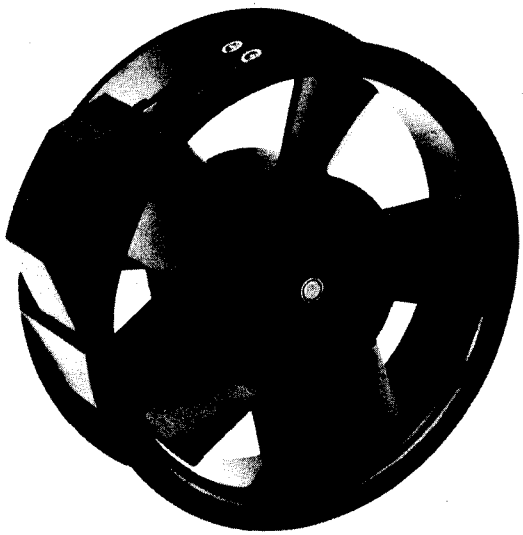

Dimensions
(in inches)

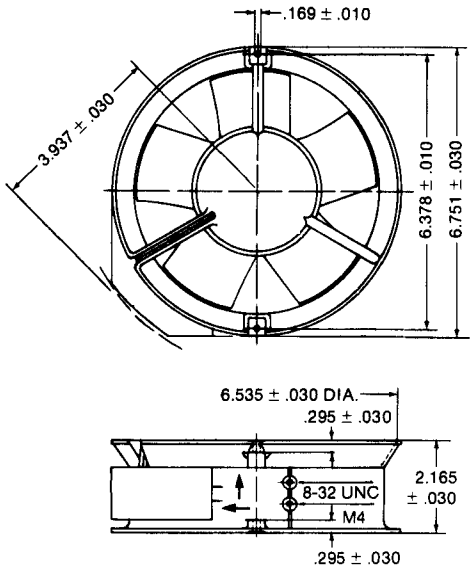

FEATURES:

- UL recognized.
- CSA certified.
- Conforms to IEC and VDE specifications.
- Precision ball bearing system.
- Low power input
- Long operating life without maintenance.
- 220 VAC, 50 Hz; 230 VAC, 60 Hz.

GENERAL DESCRIPTION

This bulletin describes the electrical and mechanical parameters of the PAMOTOR Model 6058S miniature axial fan, intended for general cooling purposes in commercial, medical and industrial electronic systems.

PERFORMANCE CHARACTERISTICS

Airflow. **230 VAC/60 Hz**
250 cfm at 0 Static Pressure
230 cfm at .10 inch H_2O
0 cfm at .70 inch H_2O
(maximum static pressure)

220 VAC/50 Hz
215 cfm at 0 Static Pressure
190 cfm at .10 inch H_2O
0 cfm at .50 inch H_2O
(maximum static pressure)

ACOUSTICAL CHARACTERISTICS

54 dB (A) at 230 VAC/60 Hz
50 dB (A) at 220 VAC/50 Hz
45 dB (SIL) at 230 VAC/60 Hz
41 dB (SIL) at 220 VAC/50 Hz

MECHANICAL CHARACTERISTICS

Venturi Block. The venturi block is made of die-cast aluminum alloy, and is specifically designed for light-weight, noiseless, efficient airflow and rapid heat dissipation.

Impellers. The impellers are molded of black, glass reinforced polyphenylene oxide, aerodynamically contoured for optimum pressure/air delivery performance.

Finish. This fan is protected by a moisture resistant black finish.

Terminals. Terminals are designed for use with No. 18 AWG wire or a quick disconnect plug and cord assembly, PAMOTOR Part No. 5505.

Bearing System. The precision ball bearing system ensures long life in a high-temperature environment, and provides maximum shock and vibration resistance.

Lubrication. Model 6058S is lubricated within the bearing system by a special lubricant permitting extended operation at elevated ambient temperatures and is guaranteed to -40°C.

Weight. This fan weighs only 38 ounces.

MOTOR

Basic Design. Two-pole, permanent split capacitor type motor, thermally protected.

Rotor Balance. Dynamically balanced to a maximum shift of the center of gravity of .0001" in each end plane.

Rotation. Clockwise, facing the air discharge.

Windings and Splices. The windings are treated with high-temperature varnish and baked at 130°C. Splices are also treated with high-temperature varnish and are further insulated with individual sleeving.

Stator Protection. Stator laminations are treated with high-temperature varnish for protection against deterioration.

Insulation Resistance. The insulation resistance is ≥5 megohms measured at 500 VDC after 48 hours humidity storage.

Insulation Class. The insulation classification is 130°C

Dielectric Strength. This fan will withstand 1650 VAC RMS for one second at 20° C and 40% relative humidity.

Speed. The speed of this fan is 3400 RPM at 230 VAC/60 Hz, and 2900 RPM at 220 VAC/50 Hz, zero static pressure.

ELECTRICAL CHARACTERISTICS

Operating Voltage and Frequency. Model 6058S is designed to operate between 180 to 264 VAC at either 50 or 60 Hz. Rated voltages are 220 VAC/50 Hz and 230 VAC/60 Hz.

Power Rating. The power rating of this fan is 26 watts at 230 VAC/60 Hz, and 20 watts at 220 VAC/50 Hz, zero static pressure.

ENVIRONMENTAL CHARACTERISTICS

Operating Temperature Range. This fan is designed to operate over a temperature range of -40° C to +80° C at 230 VAC/60 Hz.

QUALITY VERIFICATION

Life Expectancy. The life expectancy of this fan is 20,000 hours at 72° C.

Safety Codes. The fan has Underwriters' Laboratories, Inc. Yellow Card Component Recognition No. E41168. It is also CSA certified and conforms to IEC and VDE standards.

Performance Data

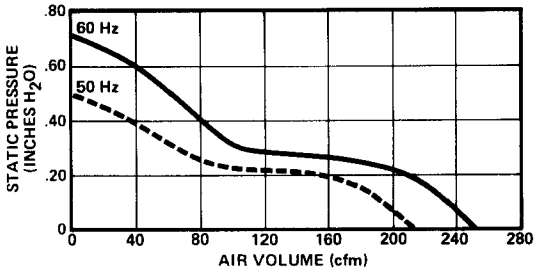

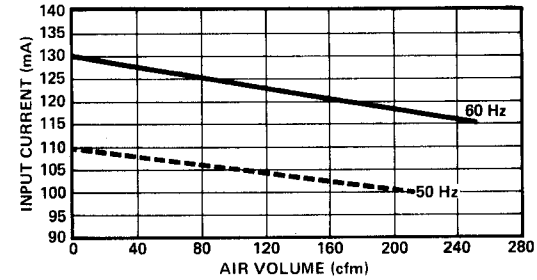

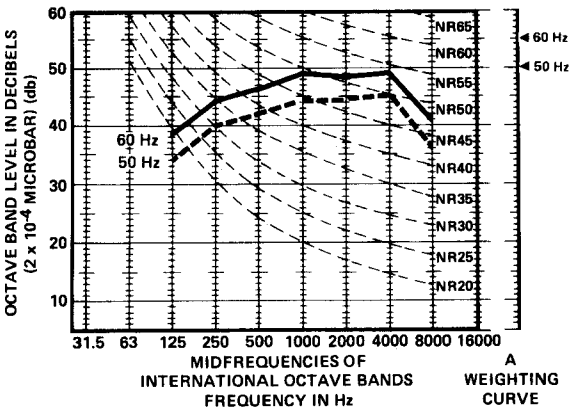

MOUNTING DIMENSIONS

Please see Drawing 5, page 137 of this catalog.

ACCESSORIES

PAMOTOR offers a full line of accessory items for its fans. Please refer to pages 140-141 of this catalog.

Model 7600S 6" Dia. All Metal Shaded-Pole Axial Fan

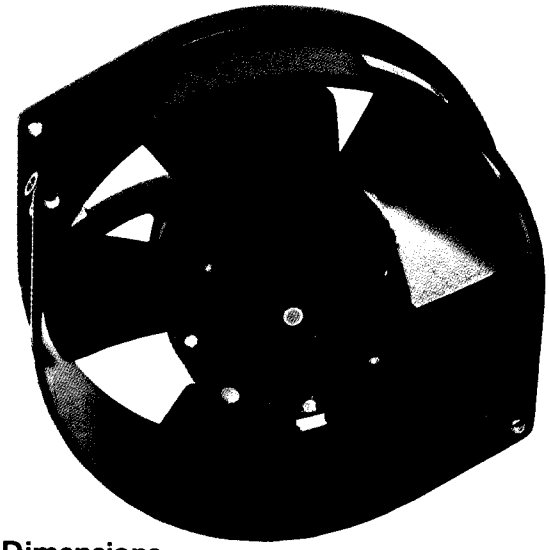

Dimensions
(in inches)

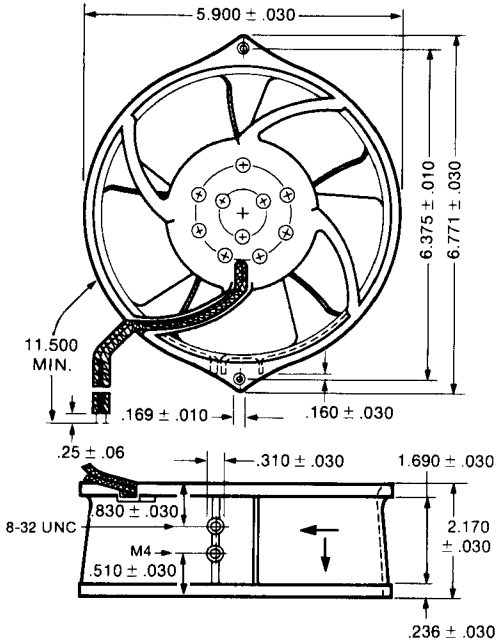

FEATURES:

- Uni-housing design.
- UL recognized.
- CSA certified.
- VDE approved.
- Conforms to IEC specifications.
- Sleeve, broached sintered iron bearing system.
- Long operating life without maintenance.
- 115 VAC, 50/60 Hz.

GENERAL DESCRIPTION

This bulletin describes the electrical and mechanical parameters of the PAMOTOR Model 7600S miniature axial fan, intended for general cooling purposes in commercial, medical and industrial electronic systems.

PERFORMANCE CHARACTERISTICS

Airflow. **115 VAC/60 Hz**
240 cfm at 0 Static Pressure
220 cfm at .10 inch H_2O
0 cfm at .58 inch H_2O
(maximum static pressure)

115 VAC/50 Hz
205 cfm at 0 Static Pressure
180 cfm at .10 inch H_2O
0 cfm at .54 inch H_2O
(maximum static pressure)

ACOUSTICAL CHARACTERISTICS

60 dB (A) at 115 VAC/60 Hz
55 dB (A) at 115 VAC/50 Hz
48 dB (SIL) at 115 VAC/60 Hz
45 dB (SIL) at 115 VAC/50 Hz

MECHANICAL CHARACTERISTICS

Venturi Block. The venturi block is made of die-cast aluminum alloy, and is specifically designed for light-weight, noiseless, efficient airflow and rapid heat dissipation.

Impellers. The impellers are all-metal, impulse-welded to the rotor and aerodynamically contoured for optimum pressure/air delivery performance.

Finish. This fan is protected by a moisture resistant black finish.

Leads. The 12" long leads are UL and CSA approved No. 18 AWG wire.

Bearing System. Consists of a large oil felt reservoir between dual broached sintered iron sleeve bearings with further support by a thrust bearing.

Lubrication. Model 7600S is lubricated within the bearing system by a special lubricant permitting extended operation at elevated ambient temperatures and is guaranteed to -40°C.

Weight. Despite its all-metal construction, this fan weighs only 38 ounces.

MOTOR

Basic Design. Inside-out, shaded-pole type motor, thermally protected.

Rotor Balance. Dynamically balanced to a maximum shift of the center of gravity of .0001" in each end plane.

Rotation. Counterclockwise, facing the air discharge.

Windings and Splices. The windings are treated with high-temperature varnish and baked at 130°C. Splices are also treated with high-temperature varnish and are further insulated with individual sleeving.

Stator Protection. Stator laminations are treated with high-temperature varnish for protection against deterioration.

Insulation Resistance. The insulation resistance is ≥5 megohms measured at 500 VDC after 48 hours humidity storage.

Insulation Class. The insulation classification is 120° C.

Dielectric Strength. This fan will withstand 1650 VAC RMS for one second at 20° C and 40% relative humidity.

Speed. The speed of this fan is 3350 RPM at 115 VAC/60 Hz, and 2850 RPM at 115 VAC/50 Hz at zero static pressure.

ELECTRICAL CHARACTERISTICS

Operating Voltage and Frequency. Model 7600S is designed to operate on 100 to 125 VAC at 50 Hz and 105 to 125 VAC at 60 Hz. The rated voltage is 115 VAC.

Power Rating. The power rating of this fan is 38 watts at 115 VAC/60 Hz, and 41 watts at 115 VAC/50 Hz, zero static pressure.

ENVIRONMENTAL CHARACTERISTICS

Operating Temperature Range. This fan is designed to operate over a temperature range of -10°C to +55°C at 115 VAC/60 Hz.

Acceleration. To achieve full speed at 105 VAC/60 Hz, 30 seconds maximum.

QUALITY VERIFICATION

Life Expectancy. The life expectancy of this fan is 20,000 hours at 55°C.

Safety Codes. This fan has Underwriters' Laboratories, Inc. Yellow Card Component Recognition No. E41168. It is also CSA certified, VDE approved and conforms to IEC standards.

Performance Data

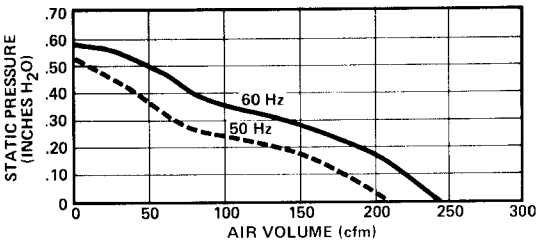

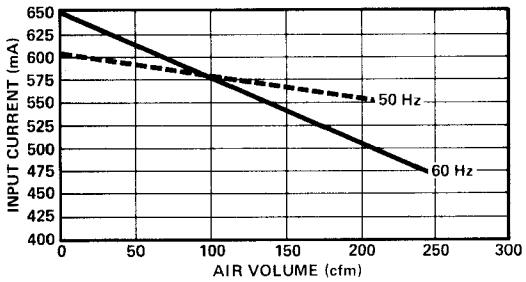

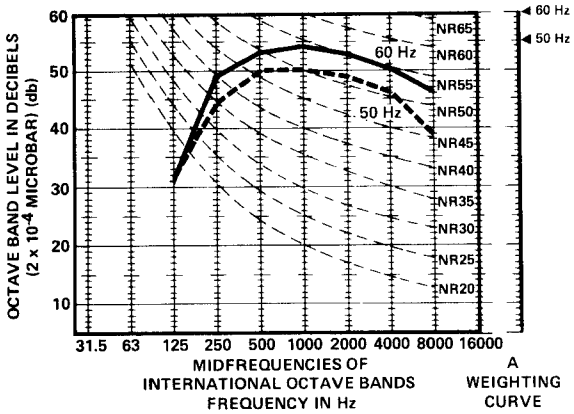

MOUNTING DIMENSIONS

Please see Drawing 4, page 137 of this catalog.

ACCESSORIES

PAMOTOR offers a full line of accessory items for its fans. Please refer to pages 140-141 of this catalog.

Model 7606 6" Dia. All Metal Shaded-Pole Axial Fan

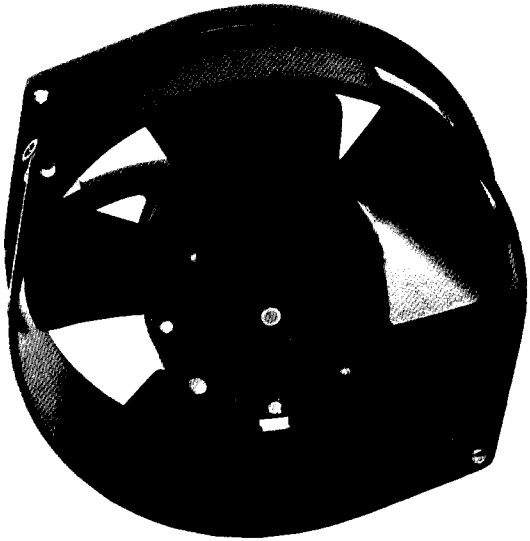

Dimensions
(in inches)

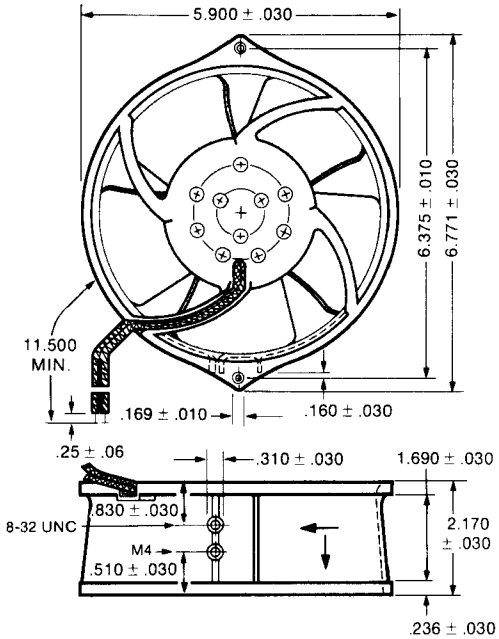

FEATURES:

- UL recognized.
- VDE approved.
- Conforms to CSA and IEC standards.
- Precision ball bearing system.
- Long operating life without maintenance.
- 115 VAC, 50/60 Hz.

GENERAL DESCRIPTION

This bulletin describes the electrical and mechanical parameters of the PAMOTOR Model 7606 miniature axial fan, intended for general ventilation purposes in commercial and industrial electronic systems.

PERFORMANCE CHARACTERISTICS

Airflow. **115 VAC/60 Hz**
240 cfm at 0 Static Pressure
235 cfm at .10 inch H_2O
0 cfm at .58 inch H_2O
(maximum static pressure)

115 VAC/50 Hz
205 cfm at 0 Static Pressure
180 cfm at .10 inch H_2O
0 cfm at .54 inch H_2O
(maximum static pressure)

ACOUSTICAL CHARACTERISTICS

61 dB(A) at 115 VAC/60 Hz
56 dB (A) at 115 VAC/50 Hz
48 dB (SIL) at 115 VAC/60 Hz
44 dB (SIL) at 115 VAC/50 Hz

MECHANICAL CHARACTERISTICS

Venturi Block. The venturi block is made of die-cast aluminum alloy, and is specifically designed for lightweight, noiseless, efficient airflow and rapid heat dissipation.

Impellers. The impellers are all-metal, impulse welded to the rotor and aerodynamically contoured for optimum pressure/air delivery performance.

Finish. This fan is protected by a moisture resistant black finish.

Leads. The leads are UL and CSA approved No.18 AWG wire.

Bearing System. This fan has ball bearings designed specifically for high temperature applications.

Lubrication. Model 7606 is lubricated within the sealed bearing system by a special lubricant permitting extended operation at elevated ambient temperatures.

Weight. Despite its all-metal construction, this fan weighs only 38 ounces.

MOTOR

Basic Design. Inside-out, shaded-pole motor, impedance protected.

Rotor Balance. The rotor is dynamically balanced to a maximum shift of the center of gravity of .0001" in each end plane.

Rotation. Counterclockwise, facing the air discharge.

Windings and Splices. The windings are treated with high-temperature varnish and baked at 130°C. Splices are also treated with high-temperature varnish and are further insulated with individual sleeving.

Stator Protection. Stator laminations are treated with high-temperature varnish for protection against deterioration.

Insulation Resistance. The insulation resistance is ≥5 megohms measured at 500 VDC after 48 hours humidity storage.

Insulation Class. The insulation classification is 155° C.

Dielectric Strength. This fan will withstand 1650 VAC RMS for one second at 20° C and 40% relative humidity.

Speed. The speed of the this fan is 3350 RPM at 115 VAC/60 Hz and 2850 RPM at 115 VAC/50 Hz with zero static pressure.

ELECTRICAL CHARACTERISTICS

Operating Voltage and Frequency. Model 7606 is recommended for operation on 105 to 125 VAC at a frequency of 60 Hz and 100 to 125 VAC at a frequency of 50 Hz.

Power Rating. The power rating of this fan is 38 watts at 115 VAC/60 Hz and 41 watts at 115 VAC/50 Hz, zero static pressure.

ENVIRONMENTAL CHARACTERISTICS

Operating Temperature Range. This fan is designed to operate over a temperature range of -40°C to +85°C at 115 VAC/60 Hz.

Acceleration. To achieve full speed at 115 VAC, 30 seconds maximum.

QUALITY VERIFICATION

Life Expectancy. The life expectancy of this fan is 20,000 hours at 72°C.

Safety Codes. This fan has Underwriters' Laboratories, Inc. Yellow Card Component Recognition No. E41168. It is also VDE approved and conforms to CSA and IEC standards.

Performance Data

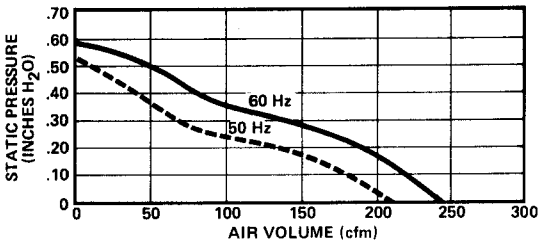

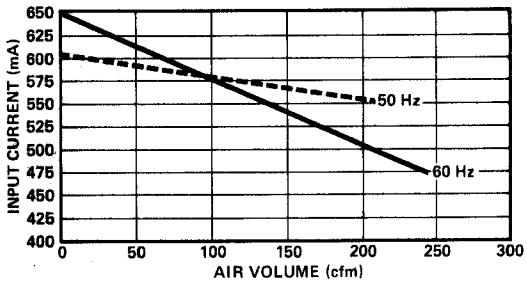

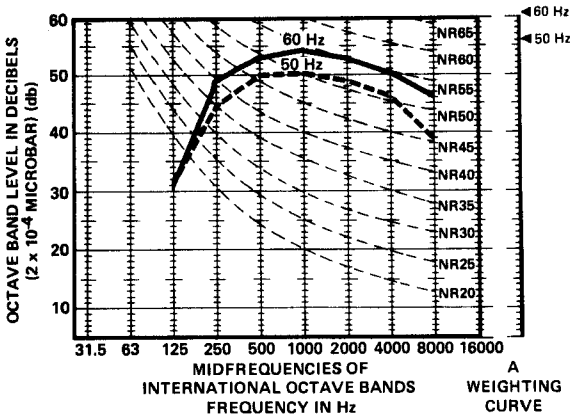

MOUNTING DIMENSIONS

Please see Drawing 4, page 137 of this catalog.

ACCESSORIES

PAMOTOR offers a full line of accessory items for its fans. Please refer to pages 140-141 of this catalog.

Model 7650S 6" Dia. All Metal Shaded-Pole Axial Fan

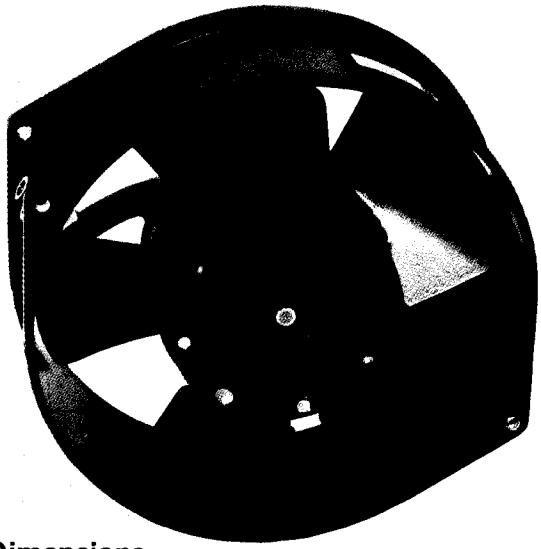

Dimensions
(in inches)

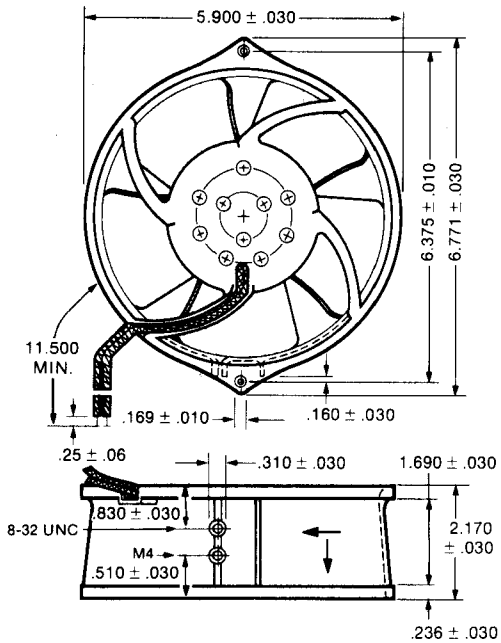

FEATURES:

- **Uni-housing design.**
- **UL recognized.**
- **CSA certified.**
- **VDE approved.**
- **Conforms to IEC standards.**
- **Sleeve, broached sintered iron bearing system.**
- **Long operating life without maintenance.**
- **220/230 VAC, 50/60 Hz.**

GENERAL DESCRIPTION

This bulletin describes the electrical and mechanical parameters of the PAMOTOR Model 7650S miniature axial fan, intended for general ventilation purposes in commercial, medical and industrial electronic systems.

PERFORMANCE CHARACTERISTICS

Airflow. **230 VAC/60 Hz**
240 cfm at 0 Static Pressure
220 cfm at .10 inch H_2O
0 cfm at .58 inch H_2O
(maximum static pressure)

220 VAC/50 Hz
205 cfm at 0 Static Pressure
180 cfm at .10 inch H_2O
0 cfm at .54 inch H_2O
(maximum static pressure)

ACOUSTICAL CHARACTERISTICS

60 dB (A) at 230 VAC/60 Hz
55 dB (A) at 220 VAC/50 Hz
48 dB (SIL) at 230 VAC/60 Hz
45 dB (SIL) at 220 VAC/50 Hz

MECHANICAL CHARACTERISTICS

Venturi Block. The venturi block is made of die-cast aluminum alloy, and is specifically designed for light-weight, noiseless, efficient airflow and rapid heat dissipation.

Impeller. The impeller blades are all-metal, impulse-welded to the rotor and aerodynamically contoured for optimum pressure/air delivery performance.

Finish. This fan is protected by a moisture resistant black finish.

Leads. The leads are UL and CSA approved No.18 AWG wire.

Bearing System. Consists of a large oil felt reservoir between dual broached sintered iron sleeve bearings with further support from a thrust bearing.

Lubrication. Model 7650S is lubricated within the sealed bearing system by a special lubricant permitting extended operation at elevated ambient temperatures and is guaranteed to -40°C.

Weight. Despite its all-metal construction, this fan weighs only 38 ounces.

MOTOR

Basic Design. Inside-out, shaded-pole motor, thermally protected.

Rotor Balance. The rotor is dynamically balanced to a maximum shift of the center of gravity of .0001" in each end plane.

Rotation. Counterclockwise, facing the air discharge.

Windings and Splices. The windings are treated with high-temperature varnish and baked at 130°C. Splices are also treated with high-temperature varnish and are further insulated with individual sleeving.

Stator Protection. Stator laminations are treated with high-temperature varnish for protection against deterioration.

Insulation Resistance. The insulation resistance is ≥5 megohms measured at 500 VDC after 48 hours humidity storage.

Insulation Class. The insulation classification is 120°C.

Dielectric Strength. This fan will withstand 1650 VAC RMS for one second at 20° C and 40% relative humidity.

Speed. The speed of this fan is 3350 RPM at 230 VAC/60 Hz, and 2850 RPM at 220 VAC/50 Hz at zero static pressure.

ELECTRICAL CHARACTERISTICS

Operating Voltage and Frequency. Model 7650S is designed for operation on 198 to 242 VAC at 50 Hz, and 207 to 253 VAC at 60 Hz. The rated voltage is 220 VAC/50 Hz, 230 VAC/60 Hz.

Power Rating. The power rating of this fan is 37 watts at 230 VAC/60 Hz, and 37 watts at 220 VAC/50 Hz, zero static pressure.

ENVIRONMENTAL CHARACTERISTICS

Operating Temperature Range. This fan is designed to operate over a temperature range of -10°C to +70°C at 230 VAC/60 Hz.

Acceleration. To achieve full speed at 230 VAC/60 Hz, 30 seconds maximum.

QUALITY VERIFICATION

Life Expectancy. The life expectancy of this fan is 20,000 hours at 70°C.

Safety Codes. This fan has Underwriters' Laboratories, Inc. Yellow Card Component Recognition No. E41168. It is also CSA certified, VDE approved and is designed to meet IEC standards.

Performance Data

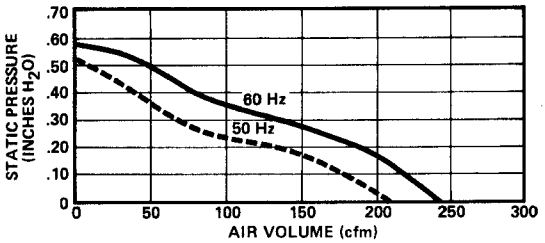

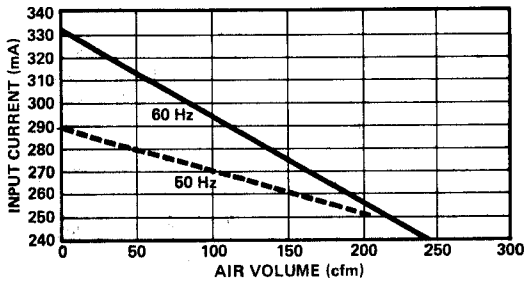

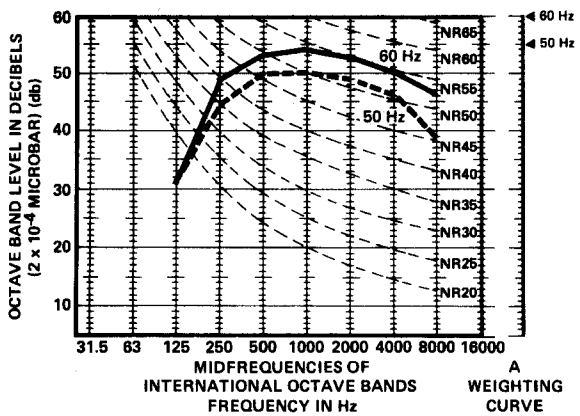

MOUNTING DIMENSIONS

Please see Drawing 4, page 137 of this catalog.

ACCESSORIES

PAMOTOR offers a full line of accessory items for its fans. Please refer to pages 140-141 of this catalog.

Model 7656 6" Dia. All Metal Shaded-Pole Axial Fan

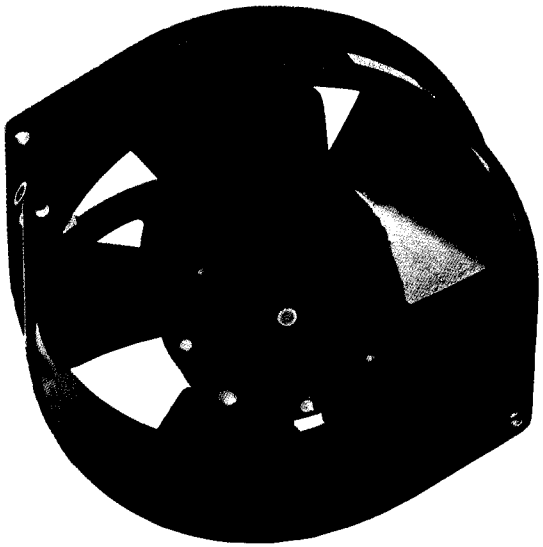

Dimensions
(in inches)

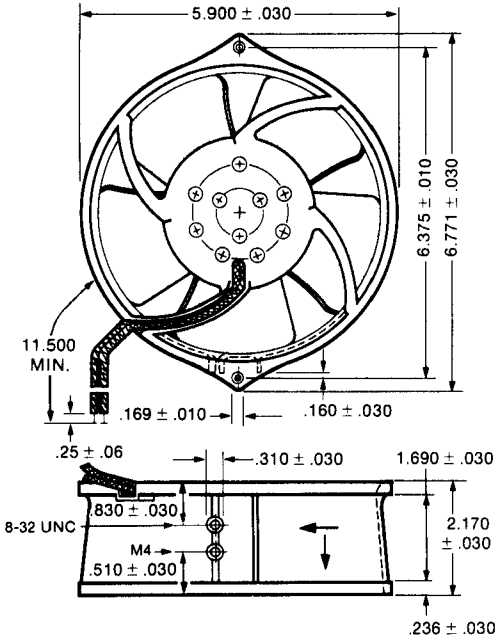

FEATURES:

- **Uni-housing design.**
- **UL recognized.**
- **VDE approved.**
- **Conforms to CSA and IEC standards.**
- **Precision ball bearing system.**
- **Long operating life without maintenance.**
- **220/230 VAC, 50/60 Hz.**

GENERAL DESCRIPTION

This bulletin describes the electrical and mechanical parameters of the PAMOTOR Model 7656 miniature axial fan, intended for general ventilation purposes in commercial and industrial electronic systems.

PERFORMANCE CHARACTERISTICS

Airflow. **230 VAC/60 Hz**
240 cfm at 0 Static Pressure
220 cfm at .10 inch H_2O
0 cfm at .58 inch H_2O
(maximum static pressure)

220 VAC/50 Hz
205 cfm at 0 Static Pressure
180 cfm at .10 inch H_2O
0 cfm at .54 inch H_2O
(maximum static pressure)

ACOUSTICAL CHARACTERISTICS

61 dB (A) at 230 VAC/60 Hz
56 dB (A) at 220 VAC/50 Hz
48 dB (SIL) at 230 VAC/60 Hz
45 dB (SIL) at 220 VAC/50 Hz

MECHANICAL CHARACTERISTICS

Venturi Block. The venturi block is made of die-cast aluminum alloy, and is specifically designed for light-weight, noiseless, efficient airflow and rapid heat dissipation.

Impeller. The impeller blades are all-metal, impulse-welded to the rotor and aerodynamically contoured for optimum pressure/air delivery performance.

Finish. This fan is protected by a moisture resistant black finish.

Leads. The leads are UL and CSA approved No.18 AWG wire.

Bearing System. This fan has ball bearings designed specifically for high temperature applications.

Lubrication. Model 7656 is lubricated within the sealed bearing system by a special lubricant permitting extended operation at elevated ambient temperatures.

Weight. Despite its all-metal construction, this fan weighs only 38 ounces.

MOTOR

Basic Design. Inside-out, shaded-pole motor, impedance protected.

Rotor Balance. The rotor is dynamically balanced to a maximum shift of the center of gravity of .0001" in each end plane.

Rotation. Counterclockwise, facing the air discharge.

Windings and Splices. The windings are treated with high-temperature varnish and baked at 130°C. Splices are also treated with high-temperature varnish and are further insulated with individual sleeving.

Stator Protection. Stator laminations are treated with high-temperature varnish for protection against deterioration.

Insulation Resistance. The insulation resistance is ≥5 megohms measured at 500 VDC after 48 hours humidity storage.

Insulation Class. The insulation classification is 155°C.

Dielectric Strength. This fan will withstand 1650 VAC RMS for one second at 20° C and 40% relative humidity.

Speed. The speed of this fan is 3350 RPM at 230 VAC/60 Hz, and 2850 RPM at 220 VAC/50 Hz at zero static pressure.

ELECTRICAL CHARACTERISTICS

Operating Voltage and Frequency. Model 7656 is designed for operation on 198 to 242 VAC at 50 Hz, and 207 to 253 VAC at 60 Hz. The rated voltage is 220 VAC/50 Hz, 230 VAC/60 Hz.

Power Rating. The power rating of this fan is 36 watts at 230 VAC/60 Hz, and 35 watts at 220 VAC/50 Hz, zero static pressure.

ENVIRONMENTAL CHARACTERISTICS

Operating Temperature Range. This fan is designed to operate over a temperature range of -40°C to +85°C at 230 VAC/60 Hz.

Acceleration. To achieve full speed at 230 VAC/60 Hz, 30 seconds maximum.

QUALITY VERIFICATION

Life Expectancy. The life expectancy of this fan is 20,000 hours at 72°C.

Safety Codes. This fan has Underwriters' Laboratories, Inc. Yellow Card Component Recognition No. E41168. It is also VDE approved and is designed to meet CSA and IEC standards.

Performance Data

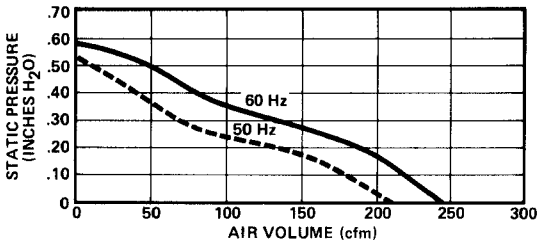

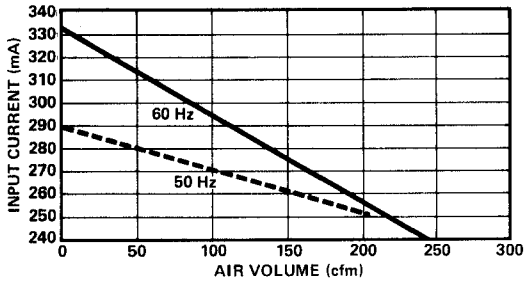

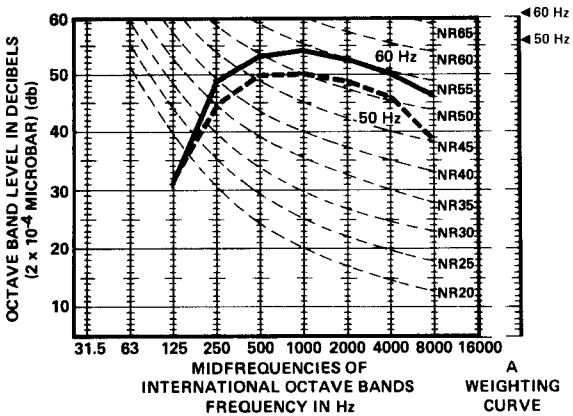

MOUNTING DIMENSIONS

Please see Drawing 4, page 137 of this catalog.

ACCESSORIES

PAMOTOR offers a full line of accessory items for its fans. Please refer to pages 140-141 of this catalog.

Model 8500D 3⅛" All Metal Shaded-Pole Axial Fan

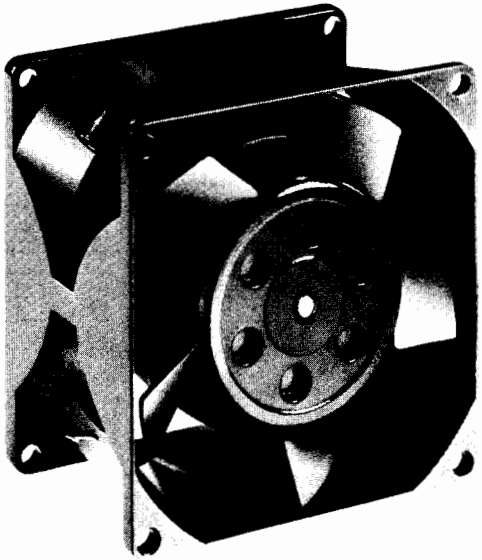

Dimensions
(in inches)

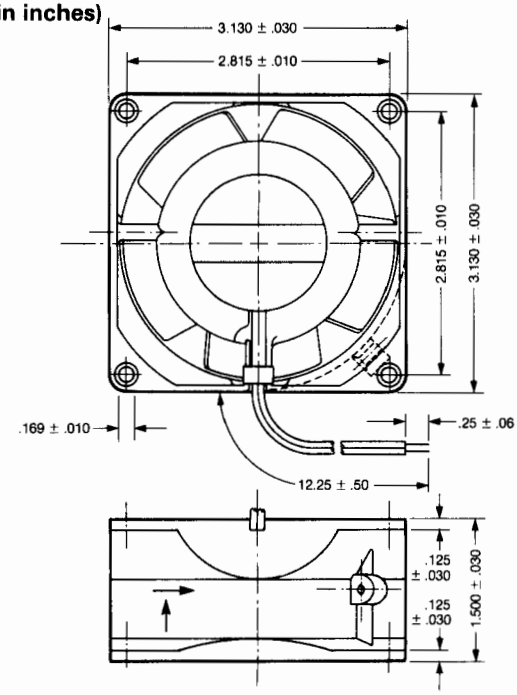

FEATURES:

- VDE approved.
- UL recognized.
- CSA certified.
- Conforms to IEC safety specifications.
- Sleeve, broached sintered iron bearing system.
- All-metal construction.
- 115 VAC, 50/60 Hz.

GENERAL DESCRIPTION

This bulletin describes the electrical and mechanical parameters of the PAMOTOR Model 8500D subminiature axial fan, intended for general cooling purposes in military, medical and industrial electronic systems.

PERFORMANCE CHARACTERISTICS

Airflow. **115 VAC/60 Hz**
40 cfm at 0 Static Pressure
30 cfm at .075 inch H_2O
0 cfm at .225 inch H_2O
(maximum static pressure)

115 VAC/50 Hz
33 cfm at 0 Static Pressure
13 cfm at .075 inch H_2O
0 cfm at .160 inch H_2O
(maximum static pressure)

ACOUSTICAL CHARACTERISTICS

35 dB (A) at 115 VAC/60 Hz
31 dB (A) at 115 VAC/50 Hz
27 dB (SIL) at 115 VAC/60 Hz
23 dB (SIL) at 115 VAC/50 Hz

MECHANICAL CHARACTERISTICS

Venturi Block. The venturi block is made of die-cast aluminum or zinc alloy, and is specifically designed for lightweight, low noise, efficient airflow and rapid heat dissipation.

Impeller. The impeller blades are all-metal, impulse-welded to the rotor and aerodynamically contoured for optimum pressure/air delivery performance.

Finish. This fan is protected by a moisture resistant black finish.

Terminals. 12-inch leads of No. 18 AWG insulated wi

Bearing System. The dual sleeve broached sintered iron bearing system has a large oil felt reservoir between the sleeve bearings in addition to a thrust bearing for increased operational life in a horizontal plane installation.

Lubrication. Model 8500D is lubricated within the bearing system by a special lubricant permitting extended operation at elevated ambient temperatures. The lubricant is guaranteed to –40°C.

Weight. Despite its all-metal construction, this fan weighs only 17 ounces.

MOTOR

Basic Design. Inside-out, shaded-pole motor, impedance protected.

Rotor Balance. The rotor is dynamically balanced to a maximum shift of the center of gravity of .0001" in each end plane.

Rotation. Counterclockwise, facing the air discharge.

Windings and Splices. The windings are treated with high-temperature varnish and baked at 130°C. Splices are also treated with high-temperature varnish and are further insulated with individual sleeving.

Stator Protection. Stator laminations are treated with high-temperature varnish for protection against deterioration.

Insulation Resistance. The insulation resistance is ≥5 megohms measured at 500 VDC after 48 hours humidity storage.

Insulation Class. The insulation classification is 120° C.

Dielectric Strength. This fan will withstand 1650 VAC RMS for one second at 20° C and 40% relative humidity.

Speed. The speed of this fan is 3250 RPM at 115 VAC/60 Hz, and 2750 RPM at 115 VAC/50 Hz with horizontal airflow and zero static pressure.

ELECTRICAL CHARACTERISTICS

Operating Voltage and Frequency. This fan is designed for operation on 105 to 125 VAC at a frequency of 60 Hz, and 100 to 125 VAC at a frequency of 50 Hz. Its rated voltage is 115 VAC.

Power Rating. The power rating of this fan is 12 watts at 115 VAC/60 Hz, and 13.5 watts at 115 VAC/50 Hz, with zero static pressure.

ENVIRONMENTAL CHARACTERISTICS

Operating Temperature Range. This fan is designed to operate over a temperature range of -10°C to +70°C at 115 VAC/60 Hz.

Acceleration. To achieve full speed at 115 VAC, 30 seconds maximum.

QUALITY VERIFICATION

Life Expectancy. The life expectancy of this fan is 20,000 hours at 70°C.

Safety Codes. The Model 8500D has Underwriters' Laboratories, Inc. Yellow Card Component Recognition Number E41168. It is also CSA certified, VDE approved and conforms to IEC standards.

Performance Data

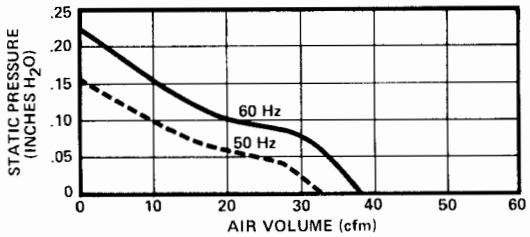

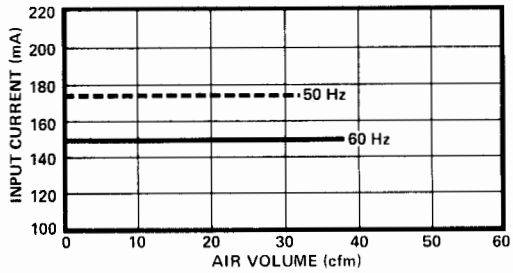

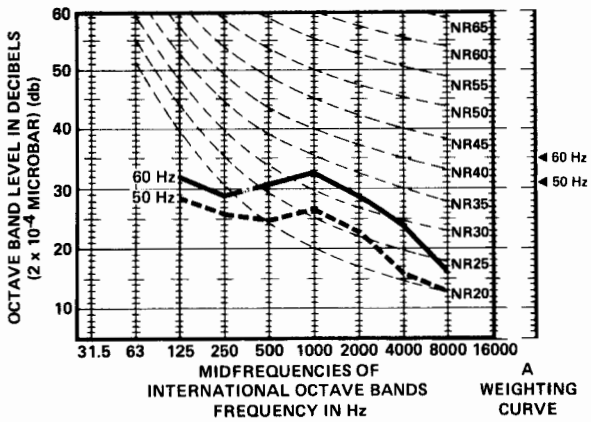

MOUNTING DIMENSIONS

Please see Drawing 3, page 136 of this catalog.

ACCESSORIES

PAMOTOR offers a full line of accessory items for its fans. Please refer to pages 140-141 of this catalog.

Model 8500DP 3⅛" All Metal Shaded-Pole Axial Fan

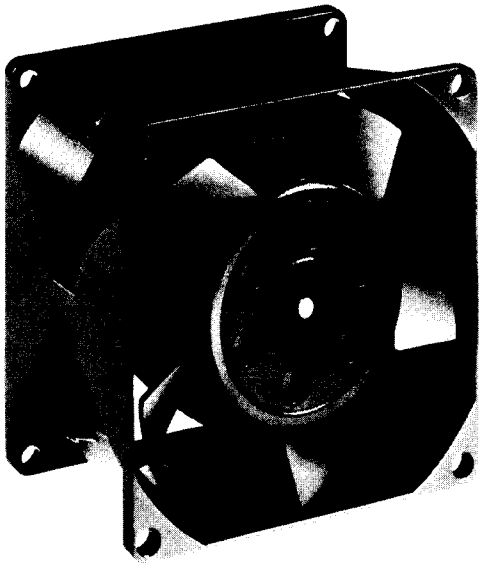

Dimensions (in inches)

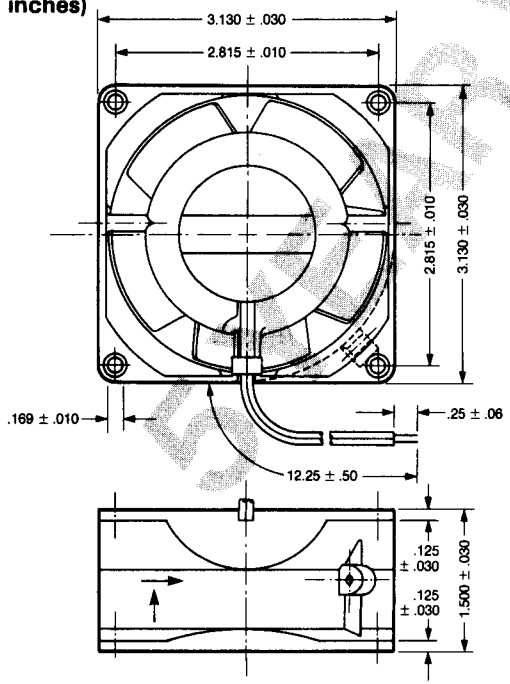

FEATURES:

- 5-year warranty.
- VDE approved.
- UL recognized.
- CSA certified.
- Conforms to IEC safety specifications.
- Sleeve, broached sintered iron bearing system.
- All-metal construction.
- 115 VAC, 50/60 Hz.

GENERAL DESCRIPTION

This bulletin describes the electrical and mechanical parameters of the PAMOTOR Model 8500DP subminiature axial fan. While electrically and mechanically similar to Model 8500D, this PENTAFLOW series fan possesses important additional proprietary design features for extended long life, optimized performance, and highest reliability. Accordingly, Model 8500DP carries a full 5-year warranty against defects in materials and workmanship.

PERFORMANCE CHARACTERISTICS

Airflow. **115 VAC/60 Hz**
40 cfm at 0 Static Pressure
30 cfm at .075 inch H_2O
0 cfm at .225 inch H_2O
(maximum static pressure)

115 VAC/50 Hz
33 cfm at 0 Static Pressure
13 cfm at .075 inch H_2O
0 cfm at .160 inch H_2O
(maximum static pressure)

ACOUSTICAL CHARACTERISTICS

35 dB (A) at 115 VAC/60 Hz
31 dB (A) at 115 VAC/50 Hz
27 dB (SIL) at 115 VAC/60 Hz
23 dB (SIL) at 115 VAC/50 Hz

MECHANICAL CHARACTERISTICS

Venturi Block. The venturi block is made of die-cast aluminum or zinc alloy, and is specifically designed for lightweight, low noise, efficient airflow and rapid heat dissipation.

Impeller. The impeller blades are all-metal, impulse-welded to the rotor and aerodynamically contoured for optimum pressure/air delivery performance.

Finish. This fan is protected by a moisture resistant black finish.

Terminals. Two leads of No. 18 AWG insulated wire.

Bearing System. The dual sleeve broached sintered iron bearing system has a large oil felt reservoir between the sleeve bearings in addition to a thrust bearing for increased operational life in a horizontal plane installation.

5-YEAR WARRANTY

Lubrication. Model 8500DP is lubricated within the bearing system by a special lubricant permitting extended operation at elevated ambient temperatures. The lubricant is guaranteed to -40°C.

Weight. Despite its all-metal construction, this fan weighs only 17 ounces.

MOTOR

Basic Design. Inside-out, shaded-pole motor, impedance protected.

Rotor Balance. The rotor is dynamically balanced to a maximum shift of the center of gravity of .0001" in each end plane.

Rotation. Counterclockwise, facing the air discharge.

Windings and Splices. The windings are treated with high-temperature varnish and baked at 130°C. Splices are also treated with high-temperature varnish and are further insulated with individual sleeving.

Stator Protection. Stator laminations are treated with high-temperature varnish for protection against deterioration.

Insulation Resistance. The insulation resistance is ≥5 megohms measured at 500 VDC after 48 hours humidity storage.

Insulation Class. The insulation classification is 120° C.

Dielectric Strength. This fan will withstand 1650 VAC RMS for one second at 20° C and 40% relative humidity.

Speed. The speed of this fan is 3250 RPM at 115 VAC/60 Hz, and 2750 RPM at 115 VAC/50 Hz with horizontal airflow and zero static pressure.

ELECTRICAL CHARACTERISTICS

Operating Voltage and Frequency. This fan is designed for operation on 105 to 125 VAC at a frequency of 60 Hz, and 100 to 125 VAC at a frequency of 50 Hz. Its rated voltage is 115 VAC.

Power Rating. The power rating of this fan is 12 watts at 115 VAC/60 Hz, and 13.5 watts at 115 VAC/50 Hz, with zero static pressure.

ENVIRONMENTAL CHARACTERISTICS

Operating Temperature Range. This fan is designed to operate over a temperature range of -10°C to +70°C at 115 VAC/60 Hz.

Acceleration. To achieve full speed at 115 VAC, 30 seconds maximum.

QUALITY VERIFICATION

Life Expectancy. The life expectancy of this fan is 20,000 hours at 70°C.

Safety Codes. The Model 8500 DP has Underwriters' Laboratories, Inc. Yellow Card Component Recognition Number E41168. It is also CSA certified, VDE approved and conforms to IEC standards.

Performance Data

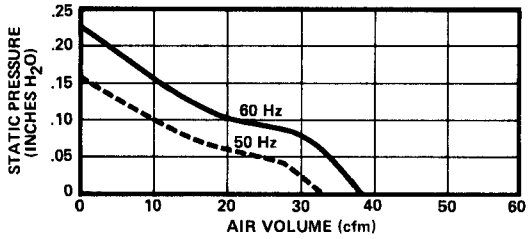

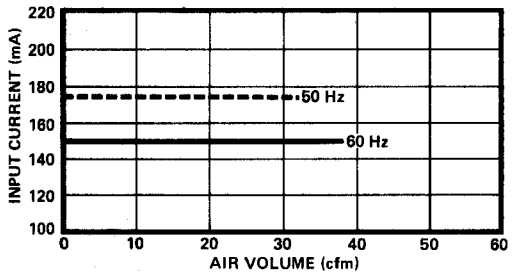

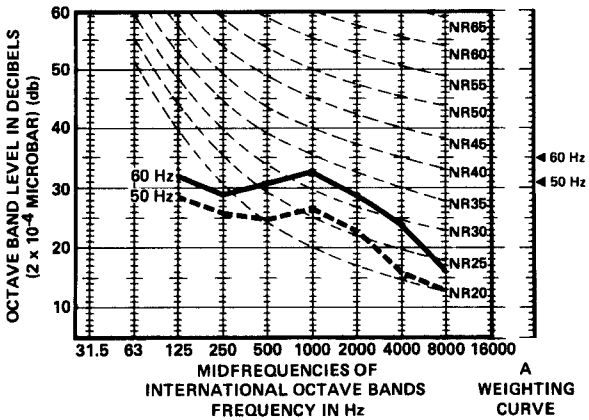

MOUNTING DIMENSIONS

Please see Drawing 3, page 136 of this catalog.

ACCESSORIES

PAMOTOR offers a full line of accessory items for its fans. Please refer to pages 140-141 of this catalog.

Model 8506D 3⅛" All Metal Shaded-Pole Axial Fan

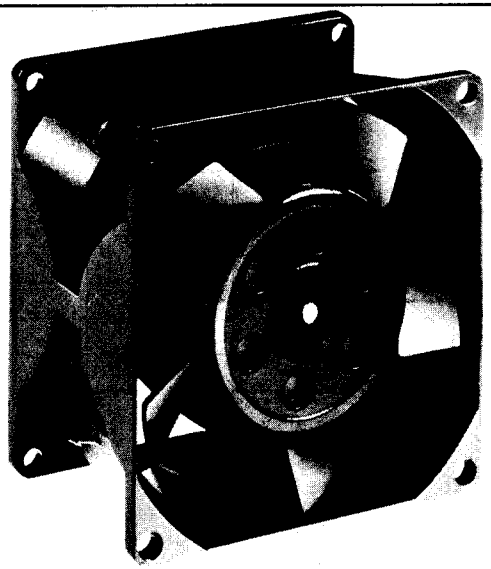

Dimensions
(in inches)

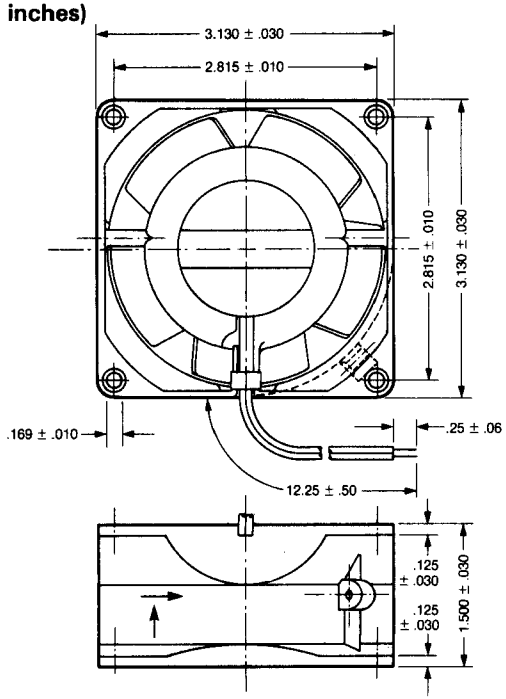

FEATURES:

- VDE approved.
- UL recognized.
- Conforms to CSA and IEC safety specifications.
- Precision ball bearing system.
- All-metal construction.
- 115 VAC, 50/60 Hz.

GENERAL DESCRIPTION

This bulletin describes the electrical and mechanical parameters of the PAMOTOR Model 8506D sub-miniature axial fan, intended for general cooling purposes in military, medical and industrial electronic systems.

PERFORMANCE CHARACTERISTICS

Airflow. **115 VAC/60 Hz**
40 cfm at 0 Static Pressure
30 cfm at .075 inch H_2O
0 cfm at .225 inch H_2O
(maximum static pressure)

115 VAC/50 Hz
33 cfm at 0 Static Pressure
13 cfm at .075 inch H_2O
0 cfm at .160 inch H_2O
(maximum static pressure)

ACOUSTICAL CHARACTERISTICS

36 dB (A) at 115 VAC/60 Hz
32 dB (A) at 115 VAC/50 Hz
28 dB (SIL) at 115 VAC/60 Hz
24 dB (SIL) at 115 VAC/50 Hz

MECHANICAL CHARACTERISTICS

Venturi Block. The venturi block is made of die-cast aluminum or zinc alloy, and is specifically designed for lightweight, low noise, efficient airflow and rapid heat dissipation.

Impeller. The impeller blades are all-metal, impulse-welded to the rotor and aerodynamically contoured for optimum pressure/air delivery performance.

Finish. This fan is protected by a moisture resistant black finish.

Terminals. Two leads of No. 18 AWG insulated wire.

Bearing System. The precision ball bearing system ensures long life in a high temperature environment and provides maximum shock and vibration resistance.

Lubrication. Model 8506D is lubricated within the sealed bearing system by a special lubricant permitting extended operation at elevated ambient temperatures of 85°C.

Weight. Despite its all-metal construction, this fan weighs only 17 ounces.

MOTOR

Basic Design. Inside-out, shaded-pole motor, impedance protected.

Rotor Balance. The rotor is dynamically balanced to a maximum shift of the center of gravity of .0001" in each end plane.

Rotation. Counterclockwise, facing the air discharge.

Windings and Splices. The windings are treated with high-temperature varnish and baked at 130°C. Splices are also treated with high-temperature varnish and are further insulated with individual sleeving.

Stator Protection. Stator laminations are treated with high-temperature varnish for protection against deterioration.

Insulation Resistance. The insulation resistance is ≥5 megohms measured at 500 VDC after 48 hours humidity storage.

Insulation Class. The insulation classification is 155° C.

Dielectric Strength. This fan will withstand 1650 VAC RMS for one second at 20° C and 40% relative humidity.

Speed. The speed of this fan is 3300 RPM at 115 VAC/60 Hz, and 2800 RPM at 115 VAC/50 Hz with horizontal airflow and zero static pressure.

ELECTRICAL CHARACTERISTICS

Operating Voltage and Frequency. This fan is designed for operation on 105 to 125 VAC at a frequency of 60 Hz, and 100 to 125 VAC at a frequency of 50 Hz. Its rated voltage is 115 VAC.

Power Rating. The power rating of this fan is 11.5 watts at 115 VAC/60 Hz, and 13 watts at 115 VAC/50 Hz, with zero static pressure.

ENVIRONMENTAL CHARACTERISTICS

Operating Temperature Range. This fan is designed to operate over a temperature range of -40°C to +90°C at 115 VAC/60 Hz.

Acceleration. To achieve full speed at 115 VAC, 30 seconds maximum.

QUALITY VERIFICATION

Life Expectancy. The life expectancy of this fan is 20,000 hours at 72°C.

Safety Codes. The Model 8506D has Underwriters' Laboratories, Inc. Yellow Card Component Recognition Number E41168. It is also VDE approved and conforms to IEC standards.

Performance Data

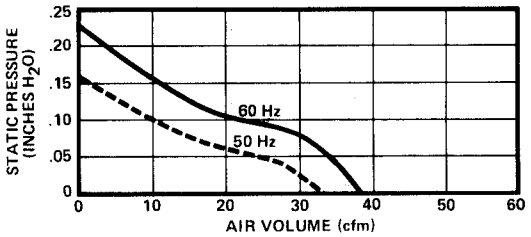

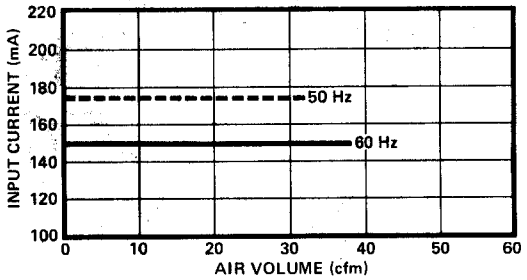

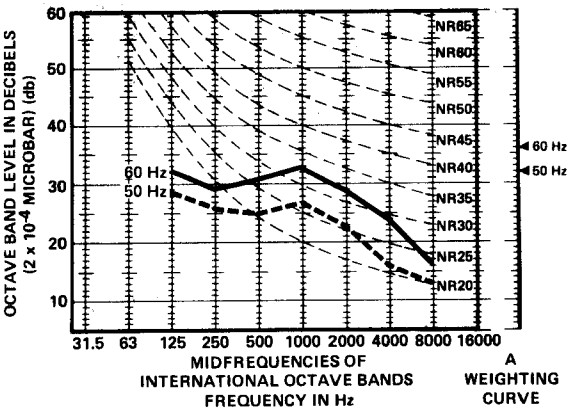

MOUNTING DIMENSIONS

Please see Drawing 3, page 136 of this catalog.

ACCESSORIES

PAMOTOR offers a full line of accessory items for its fans. Please refer to pages 140-141 of this catalog.

Model 8550D 3⅛" All Metal Shaded-Pole Axial Fan

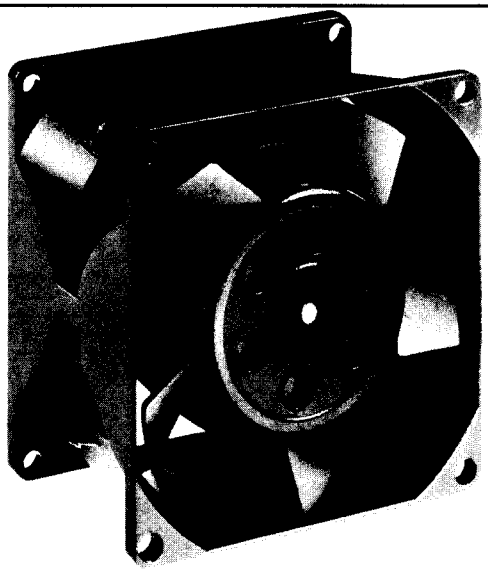

Dimensions
(in inches)

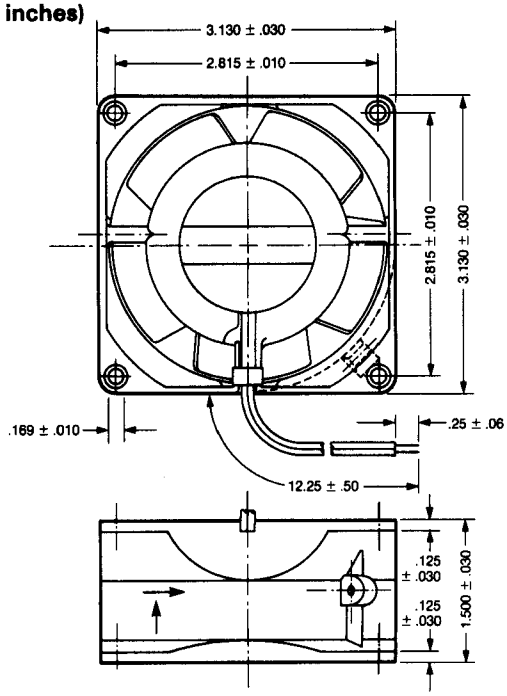

FEATURES:

- UL recognized.
- CSA certified.
- VDE approved.
- Conforms to IEC safety specifications.
- Sleeve, broached sintered iron bearing system.
- All-metal construction.
- 230 VAC, 60 Hz, 220 VAC, 50 Hz.

GENERAL DESCRIPTION

This bulletin describes the electrical and mechanical parameters of the PAMOTOR Model 8550D sub-miniature axial fan, intended for general cooling purposes in military, medical and industrial electronic systems.

PERFORMANCE CHARACTERISTICS

Airflow. **230 VAC/60 Hz**
40 cfm at 0 Static Pressure
30 cfm at .075 inch H_2O
0 cfm at .225 inch H_2O
(maximum static pressure)

220 VAC/50 Hz
33 cfm at 0 Static Pressure
13 cfm at .075 inch H_2O
0 cfm at .160 inch H_2O
(maximum static pressure)

ACOUSTICAL CHARACTERISTICS

35 dB (A) at 230 VAC/60 Hz
31 dB (A) at 220 VAC/50 Hz
27 dB (SIL) at 230 VAC/60 HZ
23 dB (SIL) at 220 VAC/50 Hz

MECHANICAL CHARACTERISTICS

Venturi Block. The venturi block is made of die-cast aluminum or zinc alloy, and is specifically designed for lightweight, low noise, efficient airflow and rapid heat dissipation.

Impeller. The impeller blades are all-metal, impulse-welded to the rotor and aerodynamically contoured for optimum pressure/air delivery performance.

Finish. This fan is protected by a moisture resistant black finish.

Terminals. Two leads of No. 18 AWG insulated wire.

Bearing System. The dual sleeve broached sintered iron bearing system has a large oil felt reservoir between the sleeve bearings in addition to a thrust bearing for increased operational life in a horizontal plane installation.

Lubrication. Model 8550D is lubricated within the bearing system by a special lubricant permitting extended operation at elevated ambient temperatures. The lubricant is guaranteed to -40°C.

Weight. Despite its all-metal construction, this fan weighs only 17 ounces.

MOTOR

Basic Design. Inside-out, shaded-pole motor, impedance protected.

Rotor Balance. The rotor is dynamically balanced to a maximum shift of the center of gravity of .0001" in each end plane.

Rotation. Counterclockwise, facing the air discharge.

Windings and Splices. The windings are treated with high-temperature varnish and baked at 130°C. Splices are also treated with high-temperature varnish and are further insulated with individual sleeving.

Stator Protection. Stator laminations are treated with high-temperature varnish for protection against deterioration.

Insulation Resistance. The insulation resistance is ≥5 megohms measured at 500 VDC after 48 hours humidity storage.

Insulation Class. The insulation classification is 120° C.

Dielectric Strength. This fan will withstand 1650 VAC RMS for one second at 20° C and 40% relative humidity.

Speed. The speed of this fan is 3250 RPM at 230 VAC/60 Hz, and 2750 RPM at 220 VAC/50 Hz with horizontal airflow and zero static pressure.

ELECTRICAL CHARACTERISTICS

Operating Voltage and Frequency. This fan is designed for operation on 198 to 242 VAC at a frequency of 50 Hz, and 207 to 253 VAC at a frequency of 60 Hz. Its rated voltage is 220/230 VAC.

Power Rating. The power rating of this fan is 13 watts at 220 VAC/50 Hz, and 12.5 watts at 230 VAC/60 Hz, with zero static pressure.

ENVIRONMENTAL CHARACTERISTICS

Operating Temperature Range. This fan is designed to operate over a temperature range of -10°C to +70°C at 230 VAC/60 Hz.

Acceleration. To achieve full speed at 230 VAC, 30 seconds maximum.

QUALITY VERIFICATION

Life Expectancy. The life expectancy of this fan is 20,000 hours at 70°C.

Safety Codes. The Model 8550D has Underwriters' Laboratories, Inc. Yellow Card Component Recognition Number E41168. It is also CSA certified, VDE approved and conforms to IEC standards.

Performance Data

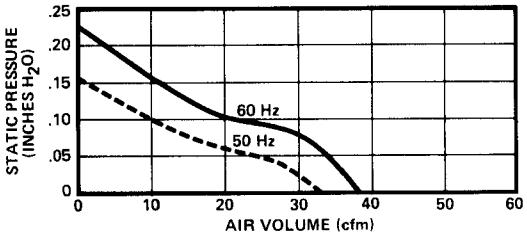

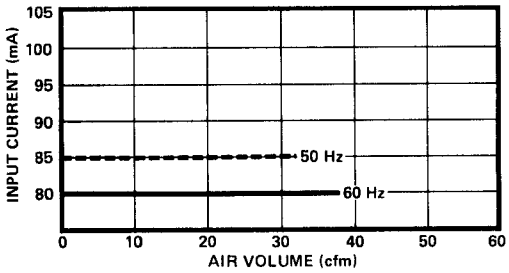

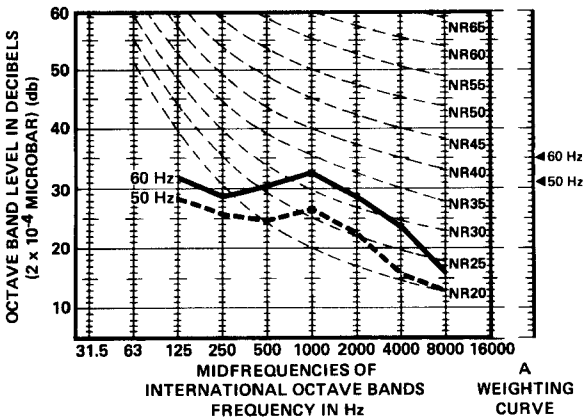

MOUNTING DIMENSIONS

Please see Drawing 3, page 136 of this catalog.

ACCESSORIES

PAMOTOR offers a full line of accessory items for its fans. Please refer to pages 140-141 of this catalog.

Model 8556D 3⅛" All Metal Shaded-Pole Axial Fan

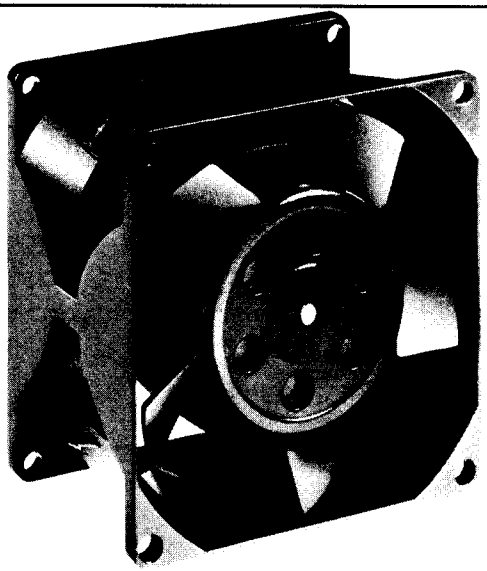

Dimensions
(in inches)

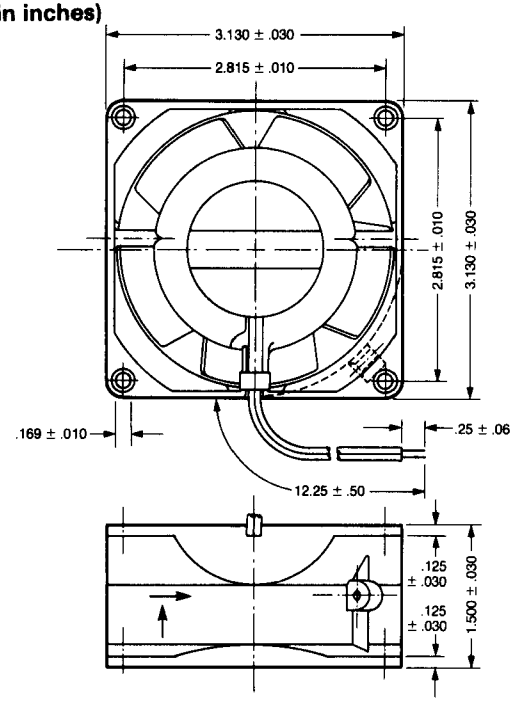

FEATURES:

- UL recognized.
- VDE approved.
- Conforms to CSA & IEC safety specifications.
- Precision ball bearing system.
- All-metal construction.
- 230 VAC, 60 Hz, 220 VAC, 50 Hz.

GENERAL DESCRIPTION

This bulletin describes the electrical and mechanical parameters of the PAMOTOR Model 8556D sub-miniature axial fan, intended for general cooling purposes in military, medical and industrial electronic systems.

PERFORMANCE CHARACTERISTICS

Airflow. **230 VAC/60 Hz**
40 cfm at 0 Static Pressure
30 cfm at .075 inch H_2O
0 cfm at .225 inch H_2O
(maximum static pressure)

220 VAC/50 Hz
33 cfm at 0 Static Pressure
13 cfm at .075 inch H_2O
0 cfm at .160 inch H_2O
(maximum static pressure)

ACOUSTICAL CHARACTERISTICS

36 dB (A) at 230 VAC/60 Hz
32 dB (A) at 220 VAC/50 Hz
28 dB (SIL) at 230 VAC/60 Hz
24 dB (SIL) at 220 VAC/50 HZ

MECHANICAL CHARACTERISTICS

Venturi Block. The venturi block is made of die-cast aluminum or zinc alloy, and is specifically designed for lightweight, low noise, efficient airflow and rapid heat dissipation.

Impeller. The impeller blades are all-metal, impulse-welded to the rotor and aerodynamically contoured for optimum pressure/air delivery performance.

Finish. This fan is protected by a moisture resistant black finish.

Terminals. Two leads of No. 18 AWG insulated wire.

Bearing System. The precision ball bearing system ensures long life in a high-temperature environment and provides maximum shock and vibration resistance.

Lubrication. Model 8556D is lubricated within the sealed bearing system by a special lubricant permitting extended operation at elevated ambient temperatures. The lubricant is guaranteed to -40°C.

Weight. Despite its all-metal construction, this fan weighs only 17 ounces.

MOTOR

Basic Design. Inside-out, shaded-pole motor, impedance protected.

Rotor Balance. The rotor is dynamically balanced to a maximum shift of the center of gravity of .0001" in each end plane.

Rotation. Counterclockwise, facing the air discharge.

Windings and Splices. The windings are treated with high-temperature varnish and baked at 130°C. Splices are also treated with high-temperature varnish and are further insulated with individual sleeving.

Stator Protection. Stator laminations are treated with high-temperature varnish for protection against deterioration.

Insulation Resistance. The insulation resistance is ≥5 megohms measured at 500 VDC after 48 hours humidity storage.

Insulation Class. The insulation classification is 155° C.

Dielectric Strength. This fan will withstand 1650 VAC RMS for one second at 20° C and 40% relative humidity.

Speed. The speed of this fan is 3300 RPM at 230 VAC/60 Hz, and 2800 RPM at 220 VAC/50 Hz with horizontal airflow and zero static pressure.

ELECTRICAL CHARACTERISTICS

Operating Voltage and Frequency. This fan is designed for operation on 198 to 242 VAC at a frequency of 50 Hz, and 207 to 253 VAC at a frequency of 60 Hz. Its rated voltage is 220/230 VAC.

Power Rating. The power rating of this fan is 12.5 watts at 220 VAC/50 Hz, and 12 watts at 230 VAC/60 Hz, with zero static pressure.

ENVIRONMENTAL CHARACTERISTICS

Operating Temperature Range. This fan is designed to operate over a temperature range of -40°C to +90°C at 230 VAC/60 Hz.

Acceleration. To achieve full speed at 230 VAC, 30 seconds maximum.

QUALITY VERIFICATION

Life Expectancy. The life expectancy of this fan is 20,000 hours at 72°C.

Safety Codes. The Model 8556D has Underwriters' Laboratories, Inc. Yellow Card Component Recognition Number E41168. It is also VDE approved and conforms to CSA and IEC standards.

Performance Data

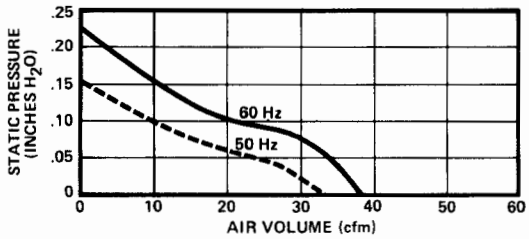

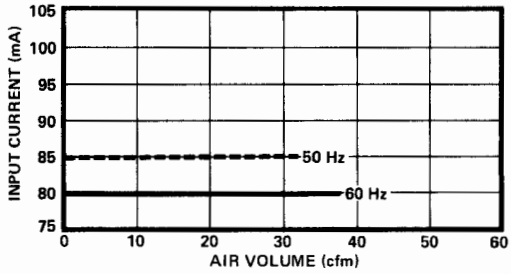

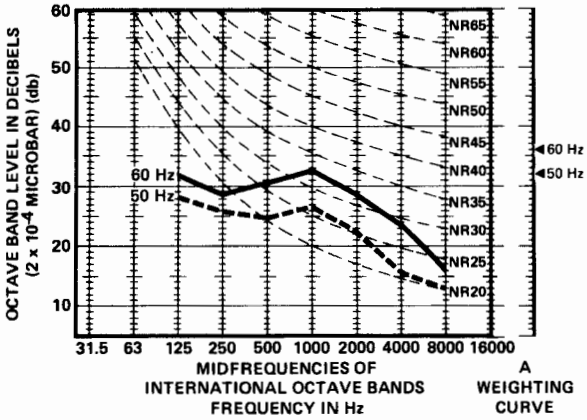

MOUNTING DIMENSIONS

Please see Drawing 3, page 136 of this catalog.

ACCESSORIES

PAMOTOR offers a full line of accessory items for its fans. Please refer to pages 140-141 of this catalog.

Model 8800D 3⅛" All Metal Shaded-Pole Axial Fan

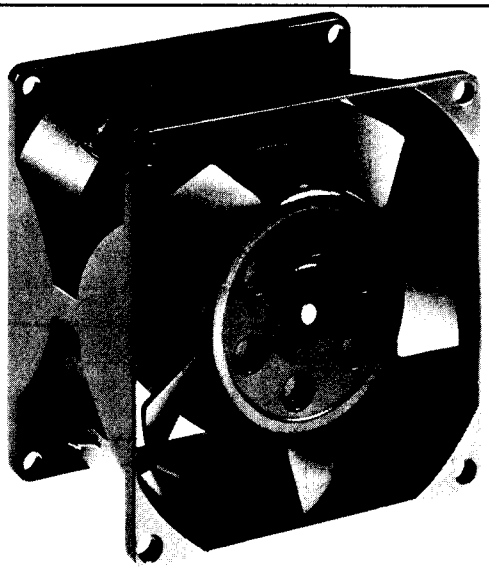

Dimensions
(in inches)

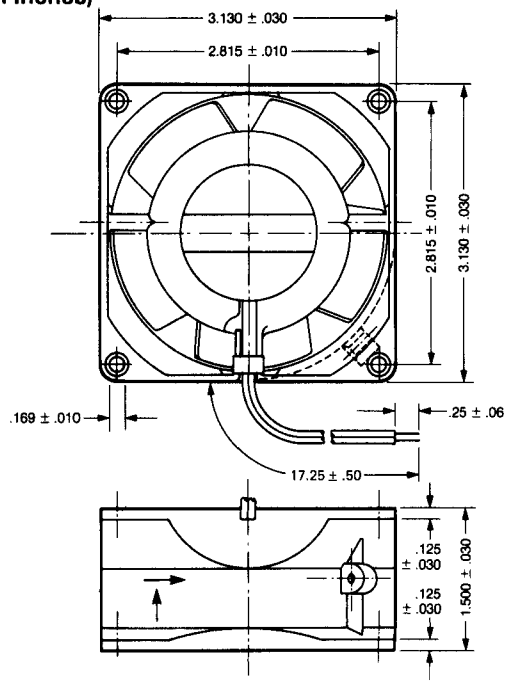

FEATURES:

- VDE approved.
- UL recognized.
- CSA certified.
- Conforms to IEC safety specifications.
- Sleeve, broached sintered iron bearing system.
- All-metal construction.
- 115 VAC, 50/60 Hz.

GENERAL DESCRIPTION

This bulletin describes the electrical and mechanical parameters of the PAMOTOR Model 8800D sub-miniature axial fan, intended for general cooling purposes in military, medical and industrial electronic systems.

PERFORMANCE CHARACTERISTICS

Airflow. **115 VAC/60 Hz**
27 cfm at 0 Static Pressure
20 cfm at .05 inch H_2O
0 cfm at .14 inch H_2O
(maximum static pressure)

115 VAC/50 Hz
22 cfm at 0 Static Pressure
12 cfm at .05 inch H_2O
0 cfm at .10 inch H_2O
(maximum static pressure)

ACOUSTICAL CHARACTERISTICS

30 dB (A) at 115 VAC/60 Hz
26 dB (A) at 115 VAC/50 Hz
21 dB (SIL) at 115 VAC/60 Hz
18 dB (SIL) at 115 VAC/50 Hz

MECHANICAL CHARACTERISTICS

Venturi Block. The venturi block is made of die-cast aluminum or zinc alloy, and is specifically designed for lightweight, low noise, efficient airflow and rapid heat dissipation.

Impeller. The impeller blades are all-metal, impulse-welded to the rotor and aerodynamically contoured for optimum pressure/air delivery performance.

Finish. This fan is protected by a moisture resistant black finish.

Terminals. Two leads of No. 18 AWG insulated wire.

Bearing System. The dual sleeve broached sintered iron bearing system has a large oil felt reservoir between the sleeve bearings in addition to a thrust bearing for increased operational life in a horizontal plane installation.

Lubrication. Model 8800D is lubricated within the bearing system by a special lubricant permitting extended operation at elevated ambient temperatures. The lubricant is guaranteed to -40°C.

Weight. Despite its all-metal construction, this fan weighs only 17 ounces.

MOTOR

Basic Design. Inside-out, shaded-pole motor, impedance protected.

Rotor Balance. The rotor is dynamically balanced to a maximum shift of the center of gravity of .0001" in each end plane.

Rotation. Counterclockwise, facing the air discharge.

Windings and Splices. The windings are treated with high-temperature varnish and baked at 130°C. Splices are also treated with high-temperature varnish and are further insulated with individual sleeving.

Stator Protection. Stator laminations are treated with high-temperature varnish for protection against deterioration.

Insulation Resistance. The insulation resistance is ≥5 megohms measured at 500 VDC after 48 hours humidity storage.

Insulation Class. The insulation classification is 120° C.

Dielectric Strength. This fan will withstand 1650 VAC RMS for one second at 20° C and 40% relative humidity.

Speed. The speed of this fan is 2550 RPM at 115 VAC/60 Hz, and 2150 RPM at 115 VAC/50 Hz with horizontal airflow and zero static pressure.

ELECTRICAL CHARACTERISTICS

Operating Voltage and Frequency. This fan is designed for operation on 105 to 125 VAC at a frequency of 60 Hz, and 100 to 125 VAC at a frequency of 50 Hz. Its rated voltage is 115 VAC.

Power Rating. The power rating of this fan is 12.5 watts at 115 VAC/60 Hz, and 14 watts at 115 VAC/50 Hz, with zero static pressure.

ENVIRONMENTAL CHARACTERISTICS

Operating Temperature Range. This fan is designed to operate over a temperature range of -10°C to +70°C at 115 VAC/60Hz.

Acceleration. To achieve full speed at 115 VAC, 30 seconds maximum.

QUALITY VERIFICATION

Life Expectancy. The life expectancy of this fan is 20,000 hours at 70°C.

Safety Codes. The Model 8800D has Underwriters' Laboratories, Inc. Yellow Card Component Recognition Number E41168. It is also CSA certified, VDE approved and conforms to IEC standards.

Performance Data

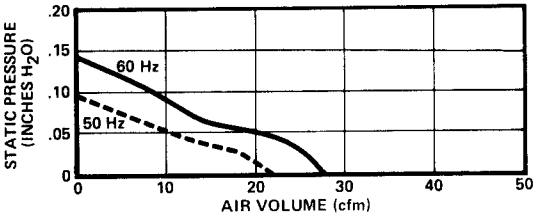

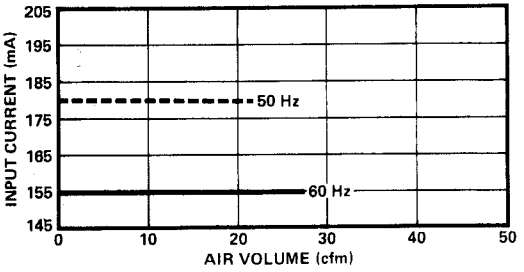

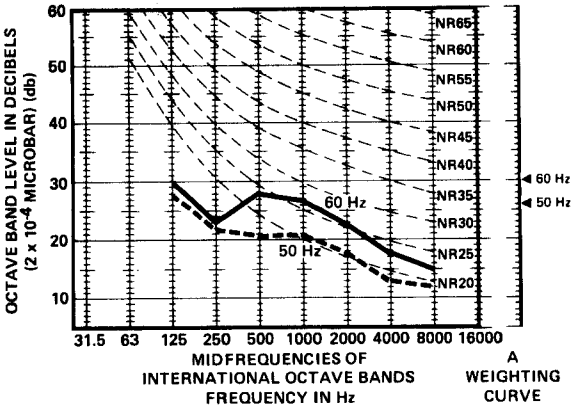

MOUNTING DIMENSIONS

Please see Drawing 3, page 136 of this catalog.

ACCESSORIES

PAMOTOR offers a full line of accessory items for its fans. Please refer to pages 140-141 of this catalog.

Model 8850D 3⅛" All Metal Shaded-Pole Axial Fan

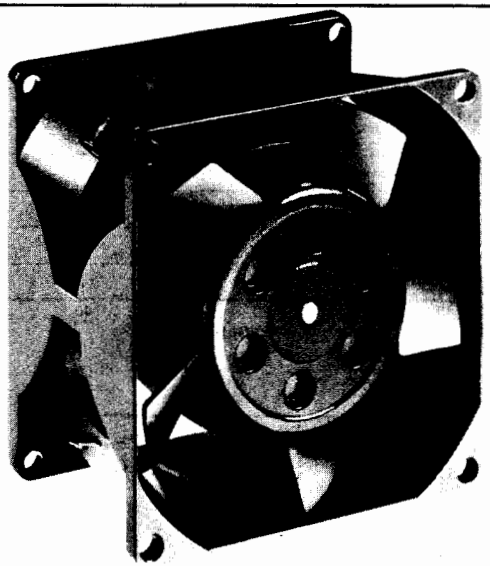

Dimensions
(in inches)

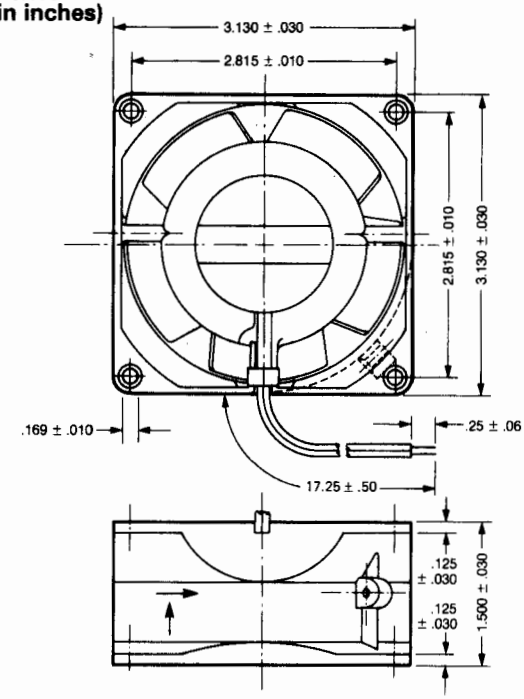

FEATURES:

- VDE approved.
- UL recognized.
- CSA certified.
- Conforms to IEC specifications.
- Sleeve, broached sintered iron bearing system.
- All-metal construction.
- 230 VAC, 60 Hz; 220 VAC, 50 Hz.

GENERAL DESCRIPTION

This bulletin describes the electrical and mechanical parameters of the PAMOTOR Model 8850 D sub-miniature axial fan, intended for general cooling purposes in military, medical and industrial electronic systems.

PERFORMANCE CHARACTERISTICS

Airflow. **230 VAC/60 Hz**
27 cfm at 0 Static Pressure
20 cfm at .05 inch H_2O
0 cfm at .14 inch H_2O
(maximum static pressure)

220 VAC/50 Hz
22 cfm at 0 Static Pressure
12 cfm at .05 inch H_2O
0 cfm at .10 inch H_2O
(maximum static pressure)

ACOUSTICAL CHARACTERISTICS

30 dB (A) at 230 VAC/60 Hz
25 dB (A) at 220 VAC/50 Hz
21 dB (SIL) at 230 VAC/60 Hz
18 dB (SIL) at 220 VAC/50 Hz

MECHANICAL CHARACTERISTICS

Venturi Block. The venturi block is made of die-cast aluminum or zinc alloy, and is specifically designed for lightweight, low noise, efficient airflow and rapid heat dissipation.

Impeller. The impeller blades are all-metal, impulse-welded to the rotor and aerodynamically contoured for optimum pressure/air delivery performance.

Finish. This fan is protected by a moisture resistant black finish.

Leads. Two leads of No. 18 AWG insulated wire.

Bearing System. The dual sleeve broached sintered iron bearing system has a large oil felt reservoir between the sleeve bearings in addition to a thrust bearing for increased operational life in a horizontal plane installation.

Lubrication. Model 8850D is lubricated within the bearing system by a special lubricant permitting extended operation at elevated ambient temperatures. The lubricant is guaranteed to -40°C.

Weight. Despite its all-metal construction, this fan weighs only 17 ounces.

MOTOR

Basic Design. Inside-out, shaded-pole motor, impedance protected.

Rotor Balance. The rotor is dynamically balanced to a maximum shift of the center of gravity of .0001" in each end plane.

Rotation. Counterclockwise, facing the air discharge.

Windings and Splices. The windings are treated with high-temperature varnish and baked at 130°C. Splices are also treated with high-temperature varnish and are further insulated with individual sleeving.

Stator Protection. Stator laminations are treated with high-temperature varnish for protection against deterioration.

Insulation Resistance. The insulation resistance is ≥5 megohms measured at 500 VDC after 48 hours humidity storage.

Insulation Class. The insulation classification is 120°C.

Dielectric Strength. This fan will withstand 1650 VAC RMS for one second at 20° C and 40% relative humidity.

Speed. The speedof this fan is 2550 RPM at 230 VAC/60 Hz, and 2150 RPM at 220 VAC/50 Hz with horizontal airflow and zero static pressure.

ELECTRICAL CHARACTERISTICS

Operating Voltage and Frequency. This fan is designed for operation on 198 to 242 VAC at a frequency of 50 Hz, and 207 to 253 VAC at a frequency of 60 Hz. Its rated voltage is 220/230 VAC.

Power Rating. The power rating of this fan is 13 watts at 220 VAC/50 Hz, and 12.5 watts at 230 VAC/60 Hz, with zero static pressure.

ENVIRONMENTAL CHARACTERISTICS

Operating Temperature Range. This fan is designed to operate over a temperature range of -10°C to +70°C at 230 VAC/60 Hz.

Acceleration. To achieve full speed at 230 VAC, 30 seconds maximum.

QUALITY VERIFICATION

Life Expectancy. The life expectancy of this fan is 20,000 hours at 70°C.

Safety Codes. The Model 8850D has Underwriters' Laboratories, Inc. Yellow Card Component Recognition Number E41168. It is also CSA certified, VDE approved and conforms to IEC standards.

Performance Data

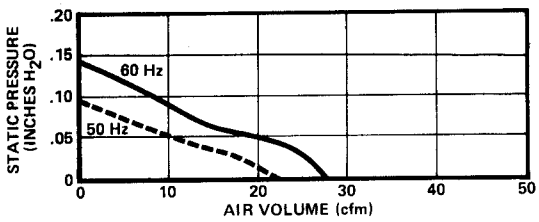

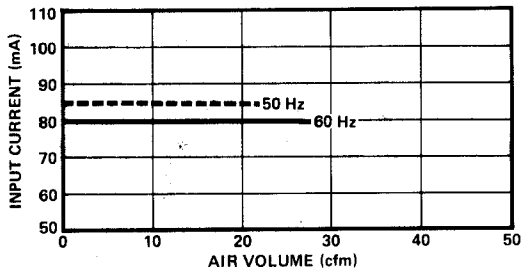

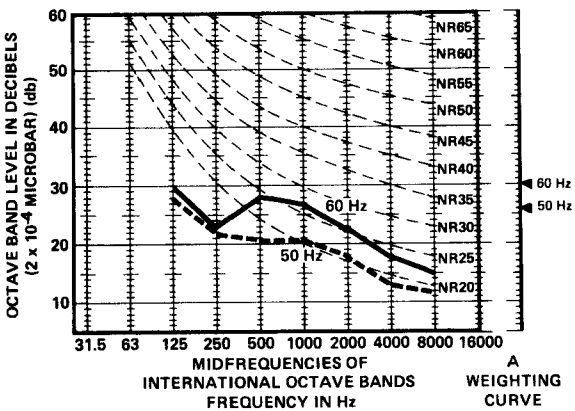

MOUNTING DIMENSIONS

Please see Drawing 3, page 136 of this catalog.

ACCESSORIES

PAMOTOR offers a full line of accessory items for its fans. Please refer to pages 140-141 of this catalog.

Model RL90-18/00 4¾" Radial Blower

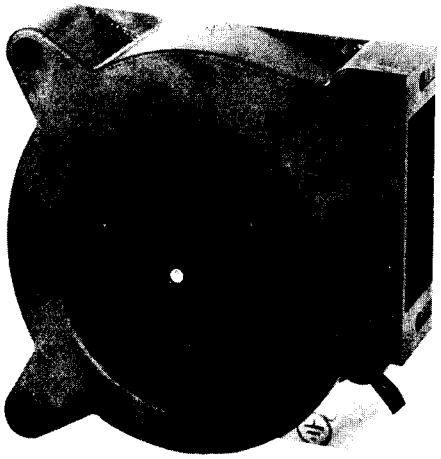

Dimensions
(in inches)

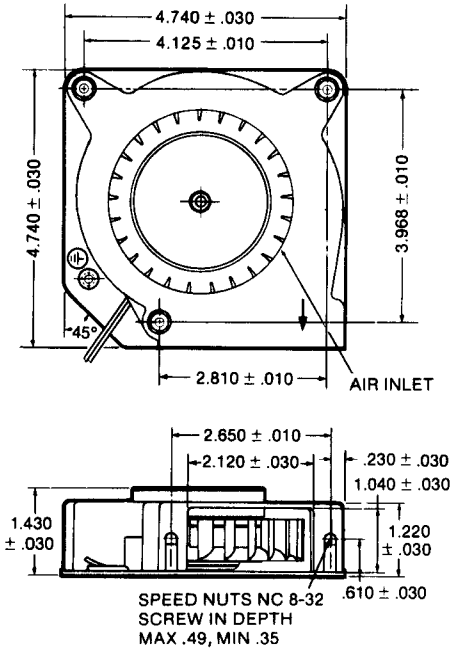

FEATURES:

- **UL recognized.**
- **VDE approved.**
- **Conforms to CSA and IEC standards.**
- **Perfect for spot cooling.**
- **115 VAC, 50/60 Hz.**
- **Sleeve, broached sintered iron bearing system.**

GENERAL DESCRIPTION

This bulletin describes the electrical and mechanical parameters of the PAMOTOR Model RL 90-18/00 miniature radial blower, intended for general cooling purposes in military, medical and industrial electronic systems.

PERFORMANCE CHARACTERISTICS

Airflow. **115 VAC/60 Hz**
25 cfm at 0 Static Pressure
23 cfm at .10 inch H_2O
0 cfm at .52 inch H_2O
(maximum static pressure)

115 VAC/50 Hz
24 cfm Free Air
22 cfm at .10 inch H_2O
0 cfm at .38 inch H_2O
(maximum static pressure)

ACOUSTICAL CHARACTERISTICS

56 db (A) at 115 VAC/60 Hz
45 dB (SIL) at 115 VAC/60 Hz

MECHANICAL CHARACTERISTICS

Construction. The housing is polycarbonate. The mounting plate is steel and the fan wheel is polyamide.

Impeller. Impeller blades are fitted to the rotor and aerodynamically contoured for optimum pressure/air delivery performance.

Terminals. Two leads (12.25" ± .5" lg) of No. 18 AWG insulated wire.

Bearing Assembly. The dual-sleeve broached sintered iron bearing system has a large oil-felt reservoir between the sleeve bearings.

Lubrication. Model RL 90-18/00 is lubricated within the bearing system by a special lubricant permitting extended operation at elevated ambient temperatures. The lubricant is guaranteed to -40°C.

Weight. Model RL 90-18/00 weighs only 23 ounces.

MOTOR

Basic Design. Inside-out, shaded-pole type motor, impedance protected.

Rotor Balance. The rotor is dynamically balanced to a maximum shift of the center of gravity of .0001" in each end plane.

Rotation. Clockwise, facing rotor side.

Windings and Splices. The windings are treated with high-temperature varnish and baked at 130°C. Splices are also treated with high-temperature varnish and are further insulated with individual sleeving.

Stator Protection. Stator laminations are treated with high-temperature varnish for protection against deterioration.

Insulation Resistance. The insulation resistance is ≥5 megohms measured at 500 VDC after 48 hours humidity storage.

Insulation Class. The insulation classification is 120°C.

Dielectric Strength. This fan will withstand 1650 VAC RMS for one second at 20° C and 40% relative humidity.

Speed. The speed of Model RL 90-18/00 is 2730 RPM at 115 VAC/60 Hz, and 2520 RPM at 115 VAC/50 Hz at zero static pressure.

ELECTRICAL CHARACTERISTICS

Operating Voltage. The rated voltage of the RL 90-18/00 is 115 VAC 50/60 Hz. The voltage range is 100-125 VAC at 50 Hz and 105-125 VAC at 60 Hz.

Power Rating. The power rating of this blower is 20 Watts at 115 VAC/60 Hz with zero static pressure.

ENVIRONMENTAL CHARACTERISTICS

Operating Temperature Range. This fan is designed to operate over a temperature range of -10°C to +55°C at 115 VAC/60 Hz.

Acceleration. To achieve full speed at 115 VAC/60 Hz, 30 seconds maximum..

QUALITY VERIFICATION

Life Expectancy. The life expectancy of this blower is 20,000 hours at 55°C.

Safety Codes. This blower has Underwriters' Laboratories, Inc. Yellow Card Component Recognition No. E41168. It is also VDE approved and conforms to CSA and IEC standards.

Performance Data

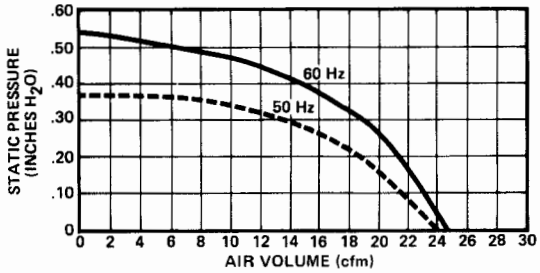

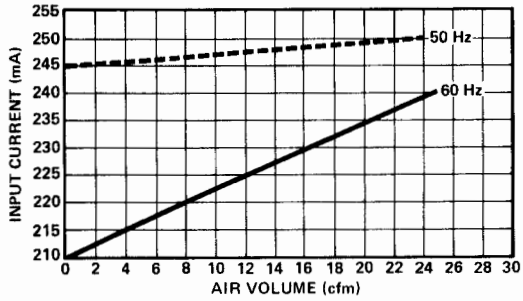

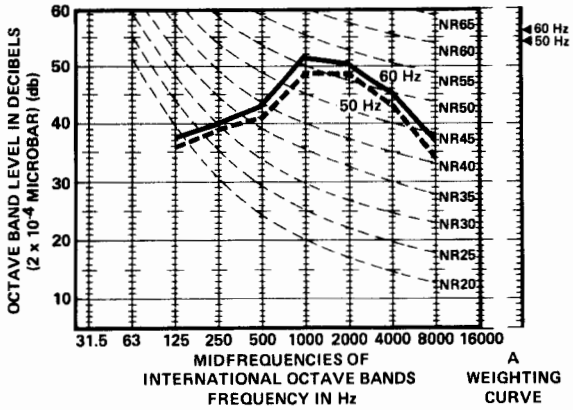

Cross Reference Directory

EBM

Competitor's Model No.	Nearest PAMOTOR Equivalent
MODEL W2S075	
W2S075-AA11-17	8500D, 8500DP
W2S075-AA11-16	8506D
W2S075-AA13-17	8550D
W2S075-AA13-16	8556D
W2S075-AD11-17	8800D
W2S075-AD11-16	8800D
W2S075-AD13-17	8850D
W2S075-AD13-16	8850D
MODEL W2S108	
W2S108-AA03-17	2500S
W2S108-AA03-16	2500S
W2S108-AA01-17	2550S
W2S108-AA01-16	2550S
MODEL W2S107	
W2S107-AA15-39	4600X
W2S107-AA15-13	4606X
W2S107-AA01-39	4650X
W2S107-AA01-13	4656X
W2S107-AB07-39	4800X
W2S107-AB07-13	4800X
W2S107-AB05-39	4850X
W2S107-AB05-13	4850X
MODEL W2G107	
W2G107-AA01-02	4112GX
W2G107-AA01-01	4112X, 4112KX
W2G107-AA03-02	4124GX
W2G107-AA03-01	4124X, 4124KX
MODEL W2S130	
W2S130-AA25-25	7606
W2S130-AA03-25	7656
MODEL W2E142	
W2E142-BB05-16	7606
W2E142-BB01-16	7656

ETRI

Competitor's Model No.	Nearest PAMOTOR Equivalent
MODEL 125	
125XL-2282	4800X
125XL-2281	4850X
125LG-2282	4800X
125LG-2281	4850X
125XR-2282	4600X, 4600XP
125XR-2281	4650X
125XL-282	4800X
125XL-281	4850X
125LG-282	4606X
125LG-281	4656X
125XR-282	4606X
125XR-281	4656X
MODEL 126	
126LH-2182	8800D
126LH-2181	8850D
126LJ-2182	8800D
126LJ-2181	8850D
126LF-2182	8500D, 8500DP
126LF-2181	8550D
126LH-182	8800D
126LH-181	8850D
126LJ-182	8800D
126LJ-181	8850D
126LF-182	8506D
126LF-181	8556D
MODEL 129	
129XL-2282	4800X
129XL-2281	4850X
129LG-2282	4800X
129LG-2281	4850X
129XR-2282	4600X, 4600XP
129XR-2281	4650X
129XL-282	4800X
129XL-281	4850X
129LG-282	4606X
129LG-281	4656X
129XR-282	4606X
129XR-281	4656X
MODEL 141	
141LV-2282	4800X
141LV-2281	4850X
141LT-2282	4800X
141LT-2281	4850X

ETRI (cont'd.)

Competitor's Model No.	Nearest PAMOTOR Equivalent
MODEL 141 (cont'd.)	
141LS-2282	4600X, 4600XP
141LS-2281	4650X
141LV-282	4800X
141LV-281	4850X
141LT-282	4800X
141LT-281	4850X
141LS-282	4606X
141LS-281	4656X
MODEL 144	
144LV-2282	4800X
144LV-2281	4850X
144LT-2282	4800X
144LT-2281	4850X
144LS-2282	4600X, 4600XP
144LS-2281	4650X
144LV-282	4800X
144LV-281	4850X
144LT-282	4800X
144LT-281	4850X
144LS-282	4606X
144LS-281	4656X
MODEL 148	
148VK-282	6008S, 7606
148VK-281	6058S, 7656
148VE-282	6008S, 7606
148VE-281	6058S, 7656
148VP-282	6008S, 7606
148VP-281	6058S, 7656

Howard

Competitor's Model No.	Nearest PAMOTOR Equivalent
MINI CYCLOHM	
3-15-1300	8800D
3-15-1301	8850D
CYCLOHM	
3-15-3450	4600X, 4600XP
3-15-3451	4650X

Nearest PAMOTOR equivalent is listed in all cases. However, some mechanical and electrical differences may exist between PAMOTOR and competitive fans. Please consult catalog or factory for more specific data.

Howard (cont'd.)

Competitor's Model No.	Nearest PAMOTOR Equivalent
CYCLOHM (cont'd.)	
3-15-2450	4800X
3-15-2452	4850X
3-15-2455	4800X
3-15-2460	4850X
3-15-2470	4800X
3-15-2475	4800X
3-15-2476	4800X
3-15-2477	4800X
3-15-4466	4650X
3-15-4467	4600X, 4600XP
3-15-4468	4650X
3-15-4469	4600X, 4600XP
3-15-4474	4650X
3-15-4475	4600X, 4600XP
3-15-4476	4650X
3-15-4477	4600X, 4600XP
MAXI-CYCLOHM	
3-15-5601	6008S, 7606
3-15-5800	6008S, 7606
3-15-5602	6058S, 7656
3-15-5801	6058S, 7656
BLOWERS	
3-15-2804	RL90-18/00
3-15-2818	RL90-18/00

IMC

Competitor's Model No.	Nearest PAMOTOR Equivalent
BOXER - Ball Bearing	
BS2107FL-1000	4606X
BS2107FL-1070	4606X
BS2107FL-1006	4656X
BOXER - Sleeve Bearing (Grand Prix)	
WS2107FL-1000	4600X, 4600XP
WS2107FL-1070	4600X, 4600XP
WS2107FL-1006	4650X

IMC (cont'd.)

Competitor's Model No.	Nearest PAMOTOR Equivalent
SUPER BOXER	
BS2107F-1110	4606X
BS2107FL-3110	4656X
WS2107F-1110	4600X, 4600XP
WS2107FL-3110	4650X
DC BOXER	
BS2107F-12	4112X
BS2107F-24	4124X
WS2107F-12	4112GX
WS2107F-24	4124GX
LOW SPEED BOXER	
WS2107FL-1072	4800X
WS2107FL-1002	4800X
WS2107F-1009	4800X
WS2107FL-1010	4850X
PEWEE BOXER	
AS115AAAS (T)	8500D, 8500DP
AS230AAAS (T)	8550D
AB115AAAS (T)	8506D
AB230AAAS (T)	8556D
AS115AAES (L)	8500D
AS230AAES (L)	8550D
AB115AAES (L)	8506D
AB230AAES (L)	8556D
AS115ABAS (T)	8500D, 8500DP
AS230ABAS (T)	8550D
AB115ABAS (T)	8506D
AB230ABAS (T)	8556D
AS115ABES (L)	8500D, 8500DP
AS230ABES (L)	8550D
AB115ABES (L)	8506D
AB230ABES (L)	8556D
PBS2107FL-1000	8506D
PWS2107FL-1000	8500D, 8500DP
PWS2107FL-1003	8550D
PBS2107FL-1003	8556D
PBS2142FL-M	8506D
PBS2142FL-6M	8556D
PWS2107FL-3	8550D
PWS2142FL-M	8500D, 8500DP
PWS2142FL-6M	8550D
PWS2142FL-2M	8800D
PWS2142FL-9M	8800D

IMC (cont'd.)

Competitor's Model No.	Nearest PAMOTOR Equivalent
LOW SPEED PEWEE BOXER	
AS115ACAS (T)	8800D
AS230ACAS (T)	8850D
AS115ACES (L)	8800D
AS230ACES (L)	8850D
AS115ADAS (T)	8800D
AS115ADES (L)	8850D
PWS2107FL-1002	8800D
PWS2142FL-9M	8800D
FULMAR	
FULMAR 10	6008S, 7606
FULMAR 20	6058S, 7656

Rotron

Competitor's Model No.	Nearest PAMOTOR Equivalent
MUFFIN DC	
MD12B1 (L)	4112X, 4112KX
MD24B1 (L)	4124X, 4124KX
MD48B1 (L)	4148X
MD12B2 (T)	4112X, 4112KX
MD24B2 (T)	4124X, 4124KX
MD48B2 (T)	4148X
SPRITE DC	
SD12B1 (L)	8112, 8112K
SD24B1 (L)	8124, 8124K
SD48B1 (L)	8148
SD12B2 (T)	8112, 8112K
SD24B2 (T)	8124, 8124K
SD48B2 (T)	8148
SCAMP DC	
SC12A1	8112G
PATRIOT DC	
PD24B1	6124
PD48B1	6148
PD24B2	6124
PD48B2	6148

Nearest PAMOTOR equivalent is listed in all cases. However, some mechanical and electrical differences may exist between PAMOTOR and competitive fans. Please consult catalog or factory for more specific data.

Rotron (cont'd.)

Competitor's Model No.	Nearest PAMOTOR Equivalent
SPRITE	
SU2A1 (L)	8500D, 8500DP
SU3A1 (L)	8550D
SU2B1 (L)	8506D
SU3B1 (L)	8556D
SU2G1 (L)	8500D, 8500DP
SU3G1 (L)	8550D
SU2H1 (L)	8506D
SU3H1 (L)	8556D
SU2E1 (L)	8800D
SU3E1 (L)	8850D
SU2C1 (L)	8800D
SU2A1Y (L)	8500D, 8500DP
SU3A1Y (L)	8550D
SU2B1Y (L)	8506D
SU3B1Y (L)	8556D
SU2G1Y (L)	8500D, 8500DP
SU3G1Y (L)	8550D
SU2H1Y (L)	8506D
SU3H1Y (L)	8556D
SU2E1Y (L)	8800D
SU3E1Y (L)	8850D
SU2C1Y (L)	8800D
SU2A5 (T)	8500D, 8500DP
SU3A5 (T)	8550D
SU2B5 (T)	8506D
SU3B5 (T)	8556D
SU2G5 (T)	8500D, 8500DP
SU3G5 (T)	8550D
SU2H5 (T)	8506D
SU3H5 (T)	8556D
SU2E5 (T)	8800D
SU3E5 (T)	8850D
SU2C5 (T)	8800D
SU2E6 (L)	8800D
SU3E6 (L)	8850D
SU2C6 (L)	8800D
SU2E6Y (L)	8800D
SU3E6Y (L)	8850D
SU2C6Y (L)	8800D
SU2A7 (L)	8500D, 8500DP
SU3A7 (L)	8550D
SU2E7 (L)	8800D
SU3E7 (L)	8850D
SU2C7 (L)	8800D
SU2A7Y (L)	8500D, 8500DP
SU3A7Y (L)	8550D
SU2E7Y (L)	8800D

Rotron (cont'd.)

Competitor's Model No.	Nearest PAMOTOR Equivalent
SPRITE (cont'd.)	
SU3E7Y (L)	8850D
SU2C7Y (L)	8800D
MUFFIN	
MU2A1	4600X, 4600XP
MU2B1	4606X
MU3A1	4650X
MU3B1	4656X
MUFFIN XL	
MX2A3	4600X, 4600XP
MX3A3	4650X
MX2B3	4606X
MX3B3	4656X
MX2A1	4600X, 4600XP
MX3A1	4650X
MX2A3Y	4600X, 4600XP
MX3A3Y	4650X
MX2B3Y	4606X
MX3B3Y	4656X
MX2A1Y	4600X, 4600XP
MX3A1Y	4656X
WHISPER	
WR2A1	4800X
WR2M1	4800X
WR2H1	4800X
WR3A1	4850X
WR3H1	4850X
WHISPER XL	
WX2A1	4800X
WX2M1	4800X
WX2H1	4800X
WX3M1	4850X
WX3H1	4850X
WX2A1Y	4800X
WX2M1Y	4800X
WX2H1Y	4800X
WX3M1Y	4850X
WX3H1Y	4850X
BISCUIT	
BT2A1	RL90-18/00

Rotron (cont'd.)

Competitor's Model No.	Nearest PAMOTOR Equivalent
PATRIOT	
PT2B3	6008S, 7606
PT77B3	6058S, 7656
MAJOR	
MR2B3	6008S, 7606
MR77B3	6058S, 7656
HI-LO 4715	
4715S055RA01A	4800X
4715S065RA01A	4800X
4715S075RA01A	4800X
4715S085RA01A	4800X
4715S108RA01A	4600X, 4600XP
4715B108RA01A	4606X
4715S115RA01A	4600X, 4600XP
4715B115RA01A	4606X
4715S065RA02A	4850X
4715S075RA02A	4850X
4715S085RA02A	4850X
4715S108RA02A	4650X
4715B108RA02A	4656X
4715S115RA02A	4650X
4715B115RA02A	4656X

Torin

Competitor's Model No.	Nearest PAMOTOR Equivalent
TA300 SERIES	
A30473-10 (T)	8500D, 8500DP
A30473-20 (L)	8500D, 8500DP
A30475-10 (T)	8550D
A30475-20 (L)	8550D
A30477-10 (T)	8506D
A30477-20 (L)	8506D
A30479-10 (T)	8556D
A30479-20 (L)	8556D
TA300 SLIMLINE SERIES	
A31434-10	8800D
A31434-20	8800D

Nearest PAMOTOR equivalent is listed in all cases. However, some mechanical and electrical differences may exist between PAMOTOR and competitive fans. Please consult catalog or factory for more specific data.

Torin (cont'd.)

Competitor's Model No.	Nearest PAMOTOR Equivalent
TA300S SERIES	
A31022-10 (T)	8500D, 8500DP
A31022-20 (L)	8500D, 8500DP
A31137-10 (T)	8550D
A31137-20 (L)	8550D
A31136-10 (T)	8506D
A31136-20 (L)	8506D
A31138-10 (T)	8556D
A31138-20 (L)	8556D
A30716-10 (T)	8800D
A30716-20 (L)	8800D
A30717-10 (T)	8800D
A30717-20 (L)	8800D
TA450 SERIES	
A30108-10	4600X, 4600XP
A28678-10	4650X
A30122-10	4606X
A30135-10	4656X
TA450 SLIMLINE SERIES	
A31383-10	4800X
A31383-20	4800X
A31384-10	4850X
A31384-20	4850X
TA450S SERIES	
A30390-10	4800X
A30426-10	4850X
A30443-10	4800X
A30444-10	4850X
A30769-10	4800X
TA450S SERIES (cont'd.)	
A30925-10	4850X
A30926-10	4800X
A30927-10	4850X
TA600 SERIES	
A30318-10	6008S, 7606
A30322-10	6058S, 7656
TA225 DC SERIES	
A31390	812
A31391	814

Torin (cont'd.)

Competitor's Model No.	Nearest PAMOTOR Equivalent
TA300 DC SERIES	
A31437	8112, 8112K
A31436	8124, 8124K
TA350 DC SERIES	
A31394	3124F
TA450 DC SERIES	
A31397	4124F

Toyo

Competitor's Model No.	Nearest PAMOTOR Equivalent
MODEL TF120	
TF120115A	4606X
TF120230A	4656X
TF120115AH	4606X
TF120230AH	4656X
TF120115AL	4800X
TF120230AL	4850X
TF120115AW	4606X
TF120230AW	4656X
TF120115AHW	4606X
TF120230AHW	4656X
MODEL TF120 (cont'd.)	
TF120115ALW	4800X
TF120230ALW	4850X
TF120115RA	4606X
TF120230RA	4656X
TF120115RAL	4800X
TF120230RAL	4850X
TF120115RXAW	4606X
TF120230RXAW	4656X
TF120115UAL	4800X
TF120230UAL	4850X

Toyo (cont'd.)

Competitor's Model No.	Nearest PAMOTOR Equivalent
MODEL TF80	
TF80115A	8506D
TF80230A	8556D
TF80115AW	8506D
TF80230AW	8556D
TF80115RAW	8506D
TF80230RAW	8556D
TF80115RALW	8800D
TF80230RALW	8850D
TF80115RXAW	8506D
TF80230RXAW	8556D
MODEL TFD80	
TFD8012BA	8112, 8112K
TFD8024BA	8124, 8124K
TFD8012RA	8112, 8112K
TFD8024RA	8124, 8124K

Nearest PAMOTOR equivalent is listed in all cases. However, some mechanical and electrical differences may exist between PAMOTOR and competitive fans. Please consult catalog or factory for more specific data.

Mounting Dimensions

Drawing 1.

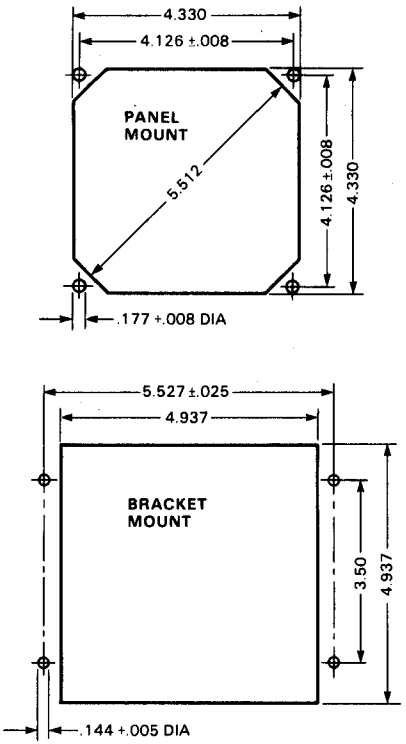

2500S
2550S

Drawing 2.

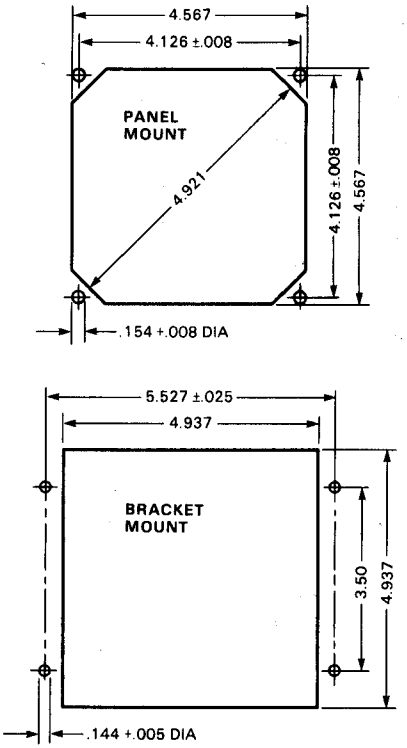

4105GX
4112X
4112GX
4112KX
4124F
4124X
4124GX
4124KX
4148X
4600X
4600XP
4606X
4650X
4656X
4800X
4850X

Drawing 3.

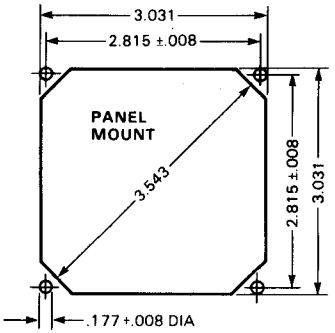

8105G
8112
8112G
8112K
8124
8124G
8124K
8148
8500D
8500DP
8506D
8550D
8556D
8800D
8850D

Drawing 4.

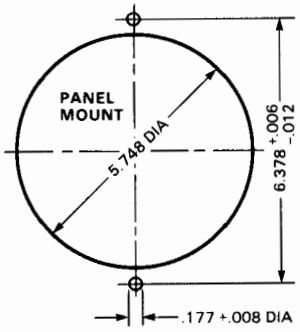

7600S
7606
7650S
7656

Drawing 5.

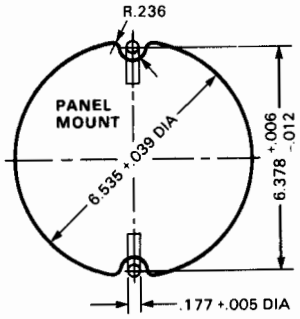

6008S
6058S
6124
6148

Drawing 6.

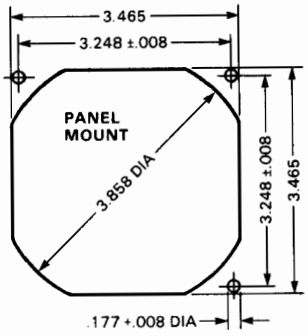

3124F

Drawing 7.

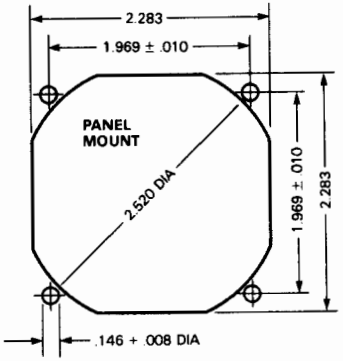

812
814

NOTE: All dimensions are in inches.

Fan Accessories Guide

FAN MODEL NUMBER	ACCESSORY PART NUMBER						
	5501 BRACKETS (PAIR)	5502 FILTER	5503 FRAMEWORK AND SCREEN	5504 FINGER GUARD medium	5505 PLUG AND CORD	5506 FINGER GUARD large	5508 FINGER GUARD small
812							
814							
900							
950							
970T							
971TR							
2500S	●	●	●	●			
2550S	●	●	●	●			
3124F					●		
4105GX	●	●	●	●	●		
4112X	●	●	●	●	●		
4112GX	●	●	●	●	●		
4112KX	●	●	●	●	●		
4124F	●	●	●	●	●		
4124X	●	●	●	●	●		
4124GX	●	●	●	●	●		
4124KX	●	●	●	●	●		
4148X	●	●	●	●	●		
4600X	●	●	●	●	●		
4600XP	●	●	●	●	●		
4606X	●	●	●	●	●		
4650X	●	●	●	●	●		
4656X	●	●	●	●	●		
4800X	●	●	●	●	●		
4850X	●	●	●	●	●		
6008S					●		
6058S					●		
6124					●		
6148					●		
7600S						●	
7606						●	
7650S						●	
7656						●	
8105G							●
8112							●
8112G							●
8112K							●
8124							●
8124G							●
8124K							●
8148							●
8500D							●
8500DP							●
8506D							●
8550D							●
8556D							●
8800D							●
8850D							●
RL90-18/00							
RL90-18/24							

Fan Accessories

Part No. 5501
BRACKETS

Supplied in pairs.

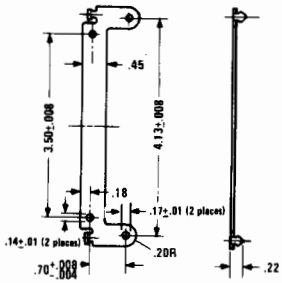

Part No. 5502
FILTER

A general purpose filter which prevents ingress of coarse dirt into equipment. The light-alloy sheet frame supports a woven mesh element.

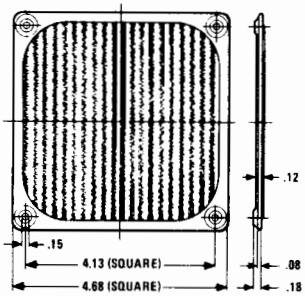

Part No. 5503
FRAMEWORK AND SCREEN

Can be used as finger guard or debris guard where appearance is important. The attractive finish makes additional treatment unnecessary.

Installation is as follows:

1. Cut out aperture in panel to dimensions given in illustration, and drill four holes in positions shown.
2. Pre-assemble fan with 2 brackets, Part No. 5501.
3. Install fan with brackets into cutout, locating brackets with pre-drilled holes in panel, and secure.
4. Part No. 5503 is now secured by engaging the spring clips onto the projecting prongs of brackets 5501.

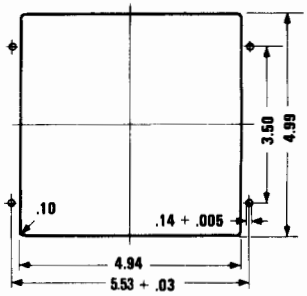

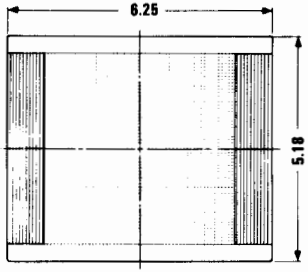

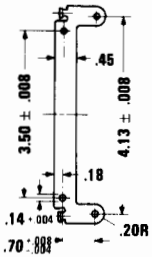

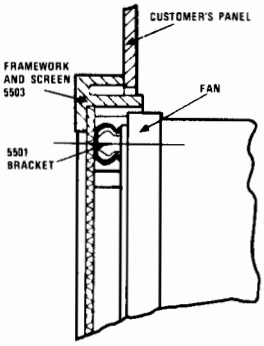

WITHOUT FILTER

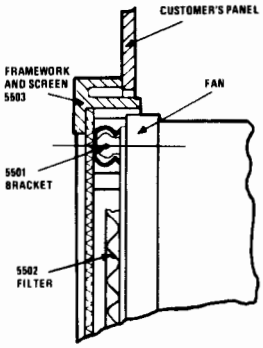

WITH FILTER

Part No. 5503/5502
FRAMEWORK AND SCREEN WITH FILTER

A combination of 5503 and 5502 offers increased filtration of intake air. Installation is the same as for 5503, with the addition of filter element 5502 fitted between fan and screen 5503. If round-head screws are used to secure brackets 5501 to the fan flanges, 5502 may be located by positioning the countersunk "dimples" over the heads of these screws, and retention is then effected when the screen is clipped into place. Removal for cleaning, and replacement afterwards, is a simple pull-off, push-on operation.

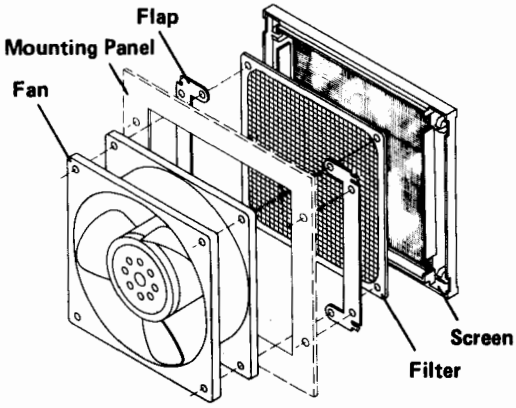

Part No. 5504
FINGER GUARD — medium

Constructed of C1010 wire, spot welded and nickel chrome plated. Conforms to UL 1/4" dia. plug gauge test. Slightly increases noise level of fan when used. Can be fitted to either side of fan.

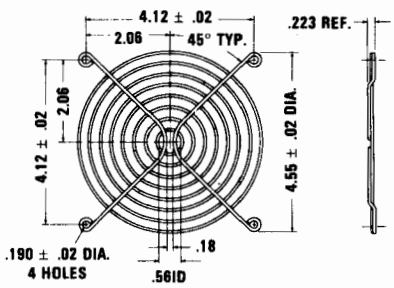

Part No. 5505
PLUG AND CORD

Plug and Cord assembly with integrally molded leads 24 inches long. For six inch leads, order Part No. 5505-6. Sleeved with black P.V.C., No. 18 AWG insulated wire.

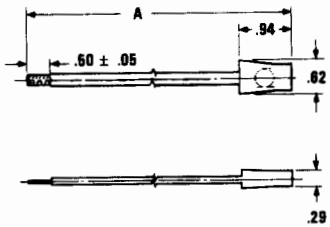

A = 5505 24 Inches; 5505-6 6 Inches

Part No. 5506
FINGER GUARD — large

Constructed of steel wire, spot welded and zinc coated.

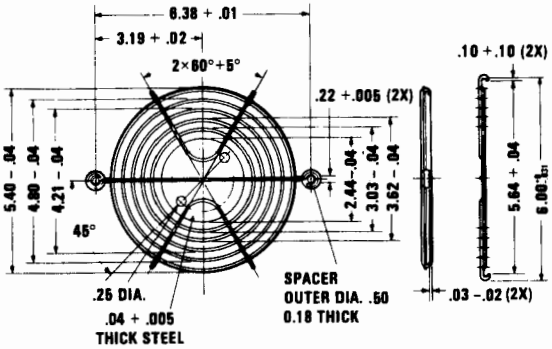

Part No. 5508
FINGER GUARD — small
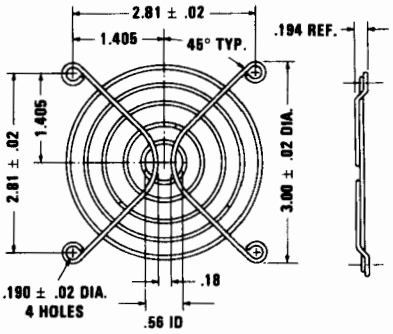
Similar to, but smaller than 5504.