WHIFFET® DC

BRUSHLESS DC BLOWER

FEATURES

- ☐ Size - 3.14" square × 1.26" deep (80 mm × 32 mm)
- ☐ 4 to 16 CFM (1.9 to 66 L/Sec.)
- ☐ 12 and 24 VDC (Nominal)
- ☐ Low noise level
- ☐ Operating temperature range: −10°C to +70°C
- ☐ Weight - 5.9 oz. (.19 Kg)
- ☐ High reliability ball bearings

PERFORMANCE

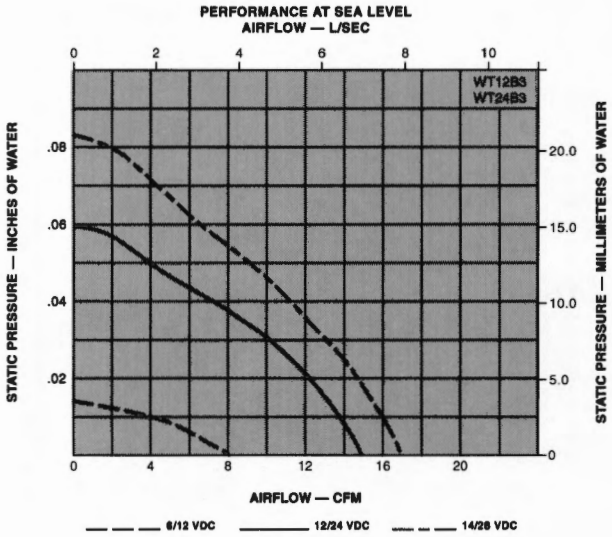

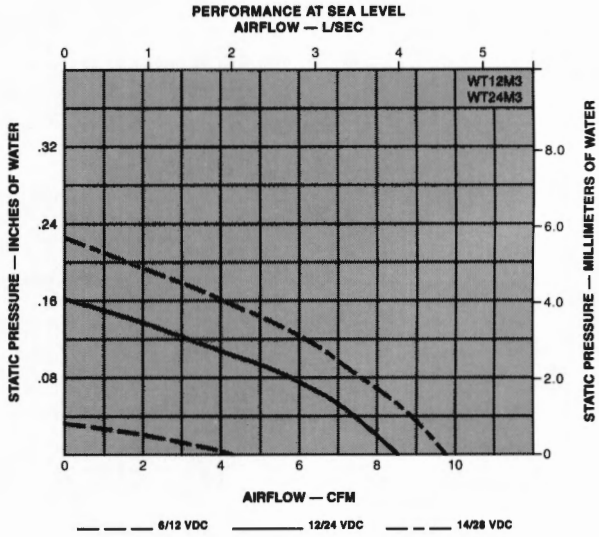

SPECIFICATIONS

Model No.	Part No.	Bearing	Nominal VDC	Range VDC	Watts	Running Current mA	Locked Rotor mA	RPM	CFM	L/Sec.
WT12B3	031101	Ball	12	6-14	5.1	420	950	4050	15.0	31.7
WT24B3	031102	Ball	24	12-28	5.1	200	525	4050	15.0	31.7
WT12M3	031103	Ball	12	6-14	1.2	100	280	2360	8.7	18.4
WT24M3	031104	Ball	24	12-28	1.2	50	165	2360	8.7	18.4

All figures are nominal free delivery values at sea level.

BISCUIT® DC

BRUSHLESS DC BLOWER

FEATURES

- ☐ Size - 4.75″ square x 1.22″ deep (120.7 mm x 31.0 mm)
- ☐ 18 to 28 CFM (8.5 to 13.2 L/Sec.)
- ☐ 12, 24, and 48 VDC (Nominal)
- ☐ High reliability ball or sleeve bearings
- ☐ Low noise level
- ☐ Operating temperature range: −10°C to +70°C
- ☐ Weight - 10 oz. (.28 Kg)
- ☐ UL Yellow Card Recognized file No. E31293
- ☐ CSA certified-file No. LR52898
- ☐ TUV Approved to IEC 950, VDE 0730, License R97229

PERFORMANCE

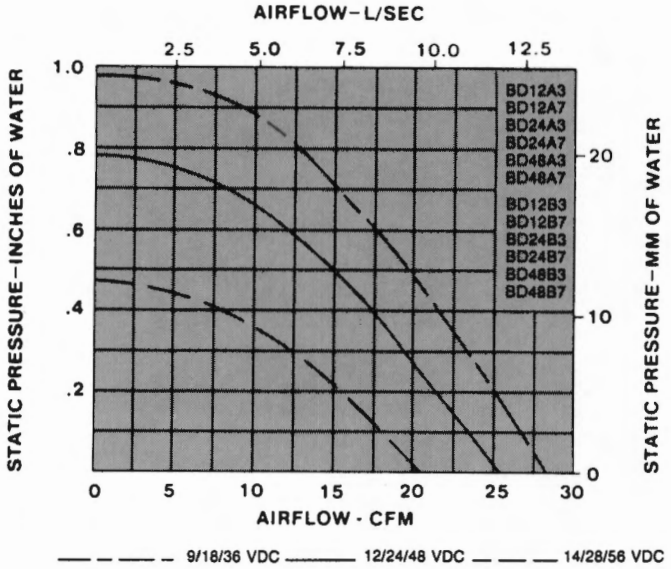

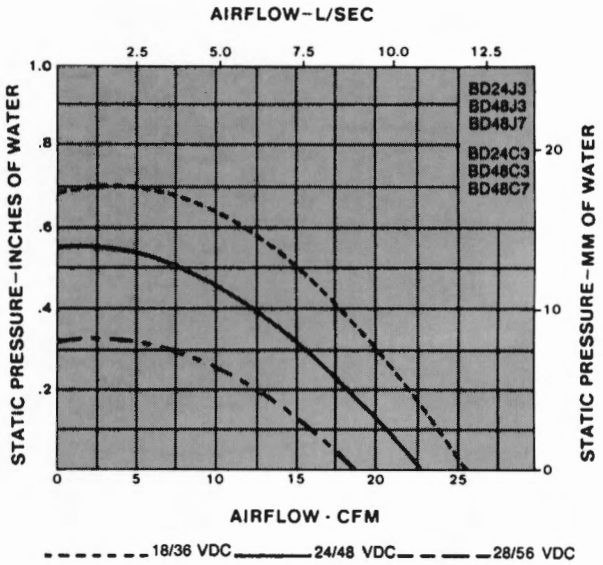

SPECIFICATIONS

SLEEVE BEARING Model No.	SLEEVE BEARING Part No.	BALL BEARING Model No.	BALL BEARING Part No.	Nominal VDC	Range VDC	Watts	Running Current mA	Locked Rotor mA	Inrush Current mA	RPM	CFM	L/Sec.
*BD12A3	032176	*BD12B3	030619	12	9-14	11	900	1700	1700	3050	25	11.8
†BD12A7	032263	†BD12B7	030620	12	9-14	11	900	1700	1700	3050	25	11.8
*BD24A3	032179	*BD24B3	030621	24	18-28	11	480	850	850	3050	25	11.8
†BD24A7	032254	†BD24B7	030622	24	18-28	11	480	850	850	3050	25	11.8
BD48A3	030633	*BD48B3	030637	48	32-56	16	350	550	550	3050	25	11.8
†BD48A7	030634	†BD48B7	030638	48	32-56	16	350	550	550	3050	25	11.8
*BD24J3	032230	*BD24C3	030623	24	18-28	7.2	300	600	600	2650	22	10.0
BD48J3	030635	BD48C3	030639	48	32-56	11	220	350	350	2650	22	10.0
†BD48J7	030636	†BD48C7	030640	48	32-56	11	220	350	350	2650	22	10.0

All figures are nominal delivery values at sea level

*Distributor item

†Tachometer Output Models (see page 60 for description)

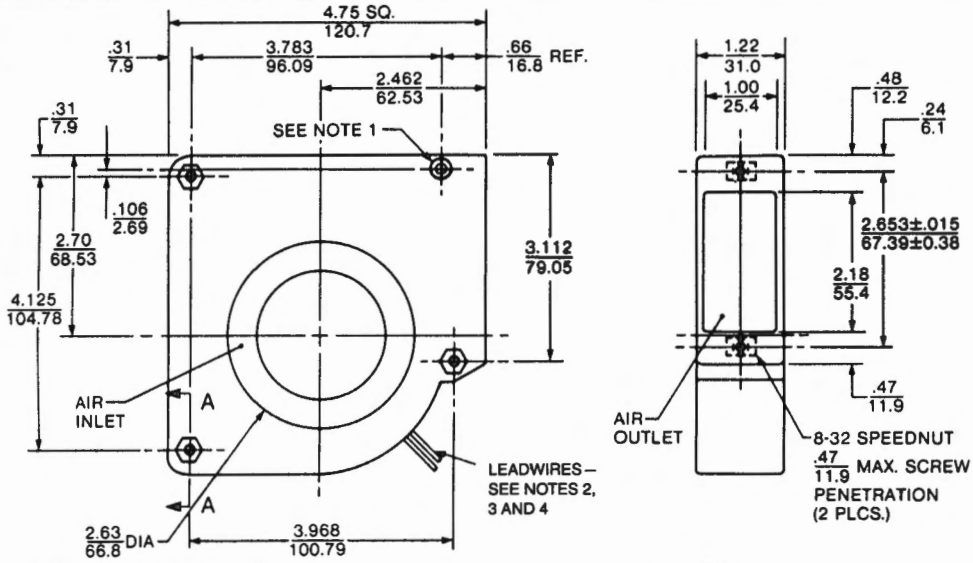

NOTES:
1. NOT INTENDED FOR USE AS MOUNTING HOLE
2. ALL LEADWIRES 22 AWG, U.L. STYLE 1061
3. POWER LEADS (–) BLACK (+) RED
4. NON-INSULATED TACHOMETER OUTPUT (WHEN SPECIFIED), ADDS ONE ADDITIONAL BLUE WITH WHITE TRACER LEAD (SAME LENGTH AS POWER LEADS). (SEE PAGE 60 FOR DETAILS.)

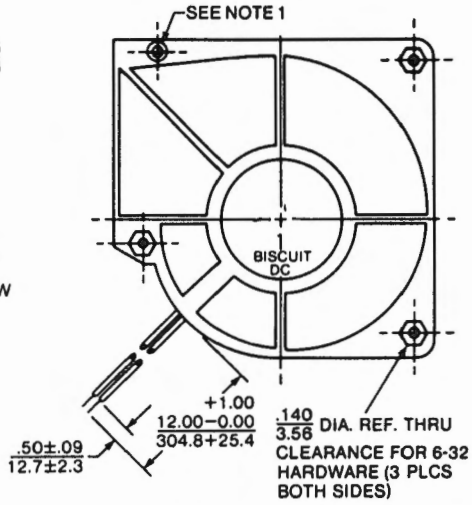

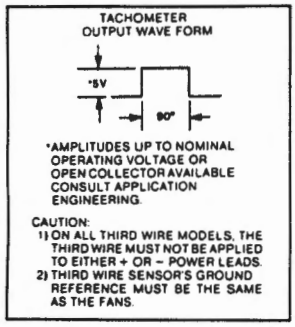

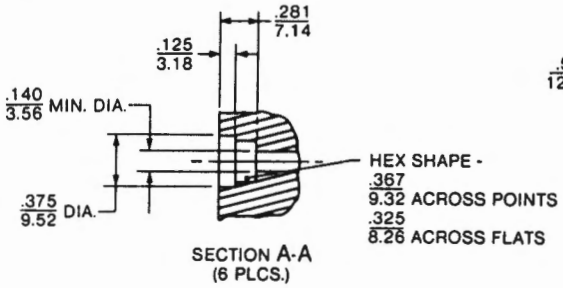

DIMENSIONS: in / mm ±
TOLERANCES: .xx= .03 / 0.8
.xxx= .010 / .25
ANGULAR ±2°
(UNLESS NOTED)

Specifications subject to change without notice.

MOTOR

Brushless electronic commutation provided by dependable solid state circuitry.

Sintered bronze sleeve or stainless steel ball bearings.

100% dielectric tested at 600 VAC/1 sec./500 microamps maximum leakage.

Electronic locked rotor protection (Current limited).

Automatic restart capability.

Polarity protected.

CONSTRUCTION

Housing - Mineral filled nylon, black, meeting UL94V-0 flammability rating.

Impeller - polypropylene, black, meeting UL94V-0 flammability rating.

ACOUSTIC RATINGS (for definitions see page 5)

	VOLTAGE	AIR FLOW		STATIC PRESSURE		PER INCE ANSI S12.11-1987			FREELY SUSPENDED @ 1 METER
Models	DC	CFM	L/Sec	"w.g.	mm H_2O	PSIL dB	SPL dBA @ 3'	NEPL Bels 'A'	dBA
BD12A3 BD24A3 BD48A3 BD12B3 BD24B3 BD48B3	NOMINAL	25	11.8	0	0	46.1	52.3	6.23	51.2
		21.8	10.3	0.295	7.49	46.1	52.0	6.20	
BD24C3 BD48C3 BD24J3 BD48J3	NOMINAL	22	10.4	0	0	44.6	50.5	6.05	48.9
		13.3	6.3	0.448	11.38	42.6	48.1	5.81	

OPTIONS

Go/No-Go Fan Performance Sensor. See page 58.

Tachometer output-square wave output equal to two pulses per revolution. Various amplitudes available, see page 60.

Harness assemblies — See page 106.

LIFE EXPECTANCY

The curve represents the continuous duty life of Biscuit DC blowers at a given temperature, after which 90% of the units will still be operating.

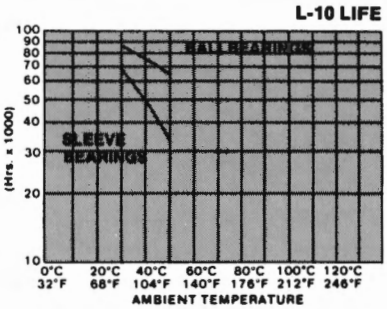

EXAMPLE: When a ball bearing unit is run at 40°C ambient, 90% of the Biscuit DC units will still be running after 78,000 hours continuous duty.

VIKING® DC

BRUSHLESS DC BLOWER

FEATURES

- ☐ Size - 5.0″ square × 1.6″ deep (127 mm × 40.6 mm)
- ☐ 16 to 40 CFM (7.5 to 18.9 L/Sec.)
- ☐ 12, 24, 48 VDC (Nominal)
- ☐ Low noise level
- ☐ Operating temperature range: – 10°C to +70°C
- ☐ Weight - 14.5 oz. (.45 Kg)
- ☐ High reliability ball bearings

PERFORMANCE

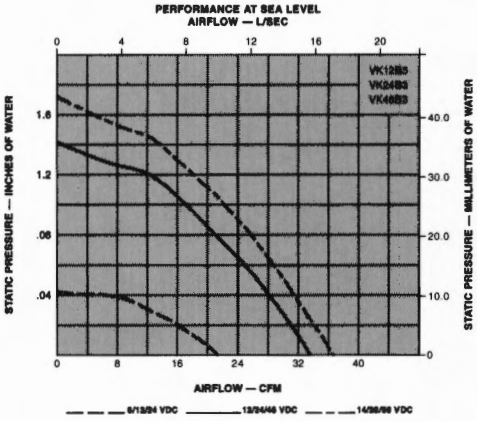

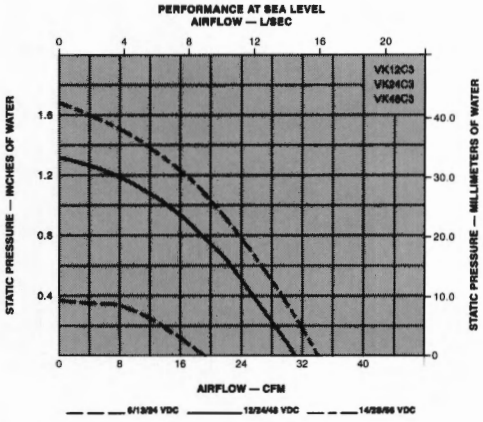

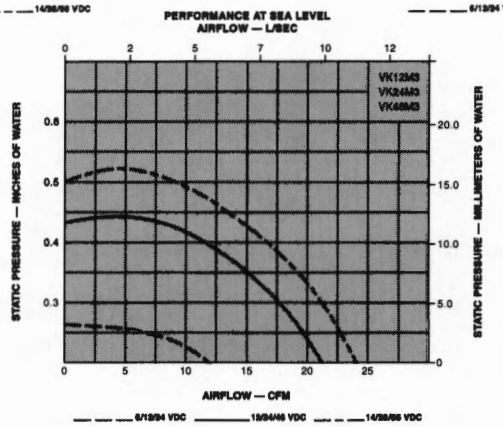

SPECIFICATIONS

Leadwire Version

Model No.	Part No.	Bearing	Nominal VDC	Range VDC	Watts	Running Current mA	Locked Rotor mA	RPM	CFM	L/Sec.
VK12B3	031047	Ball	12	6-14	20	1670	4000	4000	36	17.0
VK24B3	031048	Ball	24	12-28	20	830	2000	4000	36	17.0
VK48B3	031049	Ball	48	24-56	20	420	1000	4000	36	17.0
VK12C3	031050	Ball	12	6-14	13.2	1100	2000	3400	30	14.2
VK24C3	031051	Ball	24	12-28	13.2	550	1000	3400	30	14.2
VK48C3	031052	Ball	48	24-56	13.2	280	500	3400	30	14.2
VK12M3	031053	Ball	12	6-14	5	420	800	2500	22	10.4
VK24M3	031054	Ball	24	12-28	5	210	400	2500	22	10.4
VK48M3	031055	Ball	48	24-56	5	105	200	2500	22	10.4

All figures are nominal free delivery values at sea level.

DIMENSIONS: in / mm ±
TOLERANCES: .xx= .03 / 0.8
.xxx=.010 / .25
ANGULAR±2°
(UNLESS NOTED)

SPECIFICATIONS SUBJECT TO CHANGE WITHOUT NOTICE.

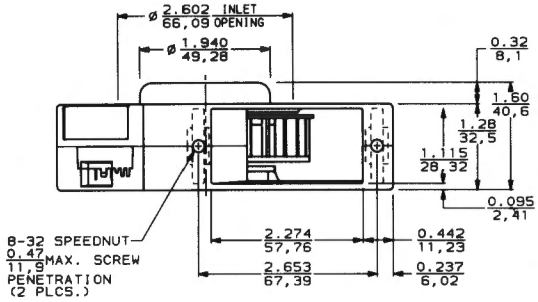

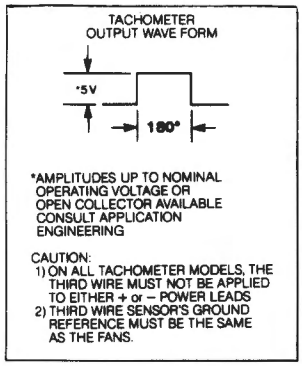

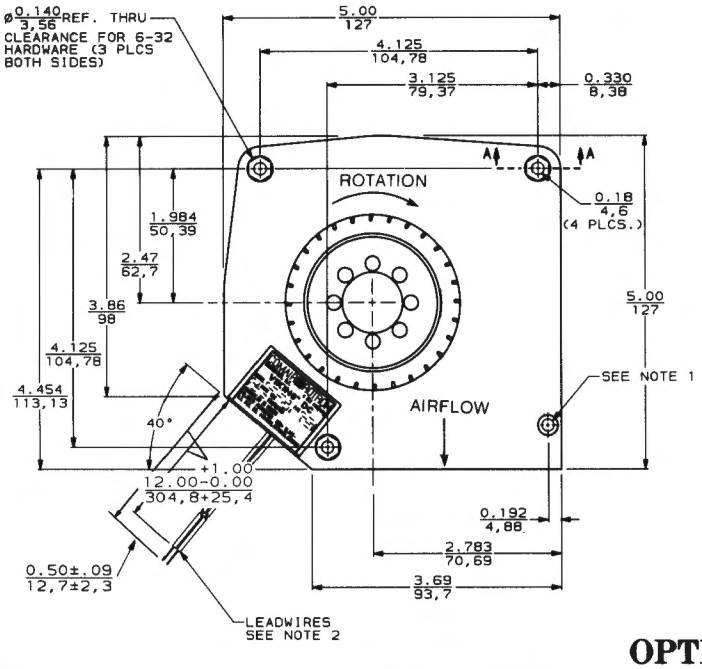

NOTES:
1. NOT INTENDED FOR USE AS MOUNTING HOLE.
2. ALL LEADWIRES TO BE: 22AWG, UL STYLE 1061, (-) BLACK, (+) RED, TACHOMETER BLUE/WHITE.

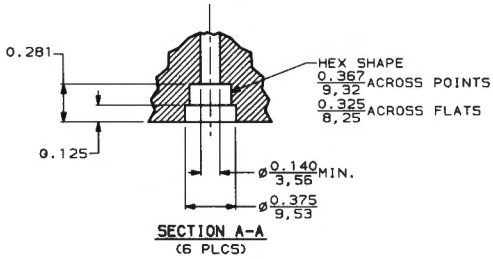

MOTOR

Brushless electronic commutation provided by dependable solid state circuitry.
Stainless steel ball bearings.
100% dielectric tested at 600 VAC/1 sec./500 microamps maximum leakage.
Electronic locked rotor protection.
Polarity protected.

CONSTRUCTION

Housing—polyester, glass filled, black, meeting UL94V-0 flammability rating.
Impeller—polypropylene, black, meeting UL94V-0 flammability rating.

ACOUSTIC RATINGS (for definitions see page 5)

	VOLTAGE	AIR FLOW		STATIC PRESSURE		PER INCE ANSI S12.11-1987			FREELY SUSPENDED @ 1 METER
Models	DC	CFM	L/Sec	"w.g.	mm H_2O	PSIL dB	SPL dBA @ 3'	NEPL Bels 'A'	dBA
VK12M_ VK24M_ VK48M_	NOMINAL	22	10.4	0	0	42.4	48.2	5.82	51.6
		17	8.0	0.3	7.62	42.2	47.7	5.77	
VK12C_ VK24C_ VK48C_	NOMINAL	30	14.2	0	0	50.9	56.7	6.67	54.7
		18.7	8.8	0.817	20.75	49.8	55.4	6.54	
VK12B_ VK24B_ VK48B_	NOMINAL	36	17.0	0	0	53.2	59.1	6.91	57.8
		16.3	7.7	1.07	27.18	51.8	57.4	6.74	

OPTIONS

Capable of furnishing:
Tachometer output—square wave output equal to one pulse per revolution. Various amplitudes available. See page 60. Two pulses available as "special" only.
Harness assemblies. See page 106.
Terminal connection. See page 106.

LIFE EXPECTANCY

The curve represents the continuous duty life of Viking DC blowers at a given temperature, after which 90% of the units will still be operating.

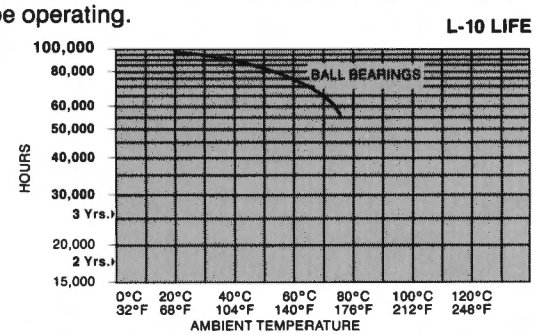

EXAMPLE: When run at 40°C ambient, 90% of Viking DC bearing units will still be running after 83,000 hours continuous duty.

SPINNAKER™ DC

BRUSHLESS DC BLOWER

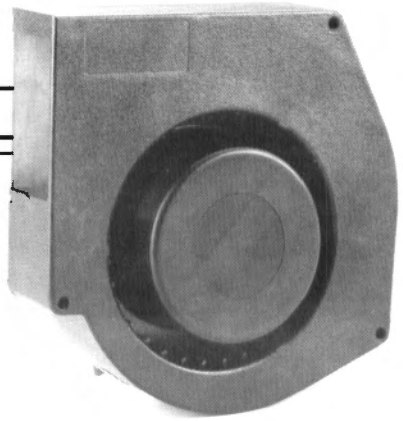

FEATURES

- ☐ Size - 6.37″ square x 1.60″ deep (161.8 mm x 40.6 mm)
- ☐ 29 to 68 CFM (14 to 32 L/Sec.)
- ☐ 24 and 48 VDC (Nominal)
- ☐ Low noise level
- ☐ Operating temperature range: −10°C to +70°C
- ☐ Weight - 2.1 lbs. (.953 Kg)
- ☐ UL Yellow Card Recognized - File No. E31293
- ☐ CSA Certified - File No. LR52898
- ☐ TUV approved to IEC 950, VDE 0730, Licenses R97152 and R97188

PERFORMANCE

PERFORMANCE AT SEA LEVEL
AIRFLOW — L/SEC.

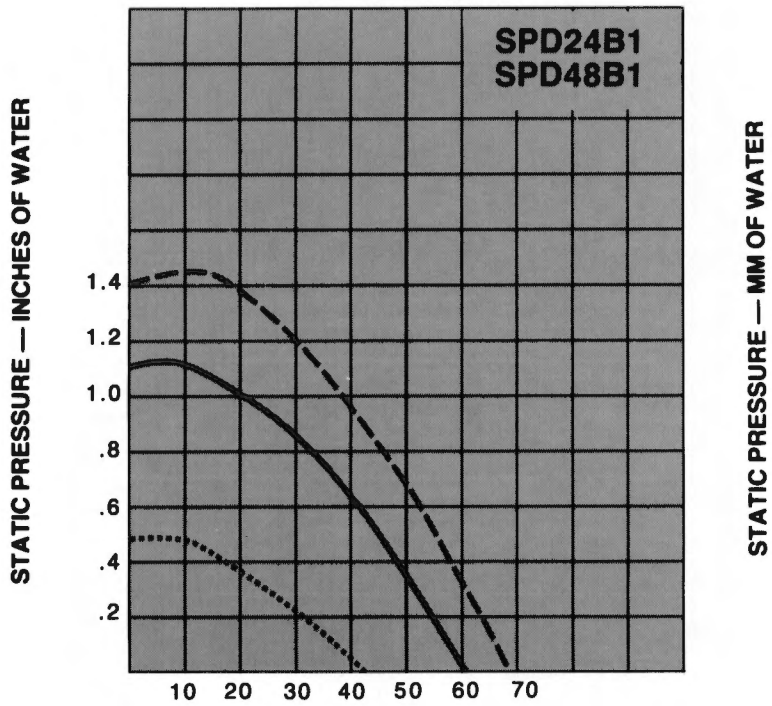

24 VDC Models: ..... 16 VDC _____ 24 VDC _ _ _ _ _ _ _ 28 VDC
48 VDC Models: ..... 32 VDC _____ 48 VDC _ _ _ _ _ _ _ 56 VDC

SPECIFICATIONS

Model No.	Part No.	Bearing	Nominal VDC	Range VDC	Power Watts	Running Current mA	Locked Rotor mA	Inrush Current mA	RPM	CFM	L/Sec.
*SPD24B1	032183	Ball	24	12-28	30	1300	1800	2000	2500	60	28.3
SPD48B1	032196	Ball	48	24-56	30	600	900	1000	2500	60	28.3

* Distributor Item.

All figures are nominal free delivery values at sea level.

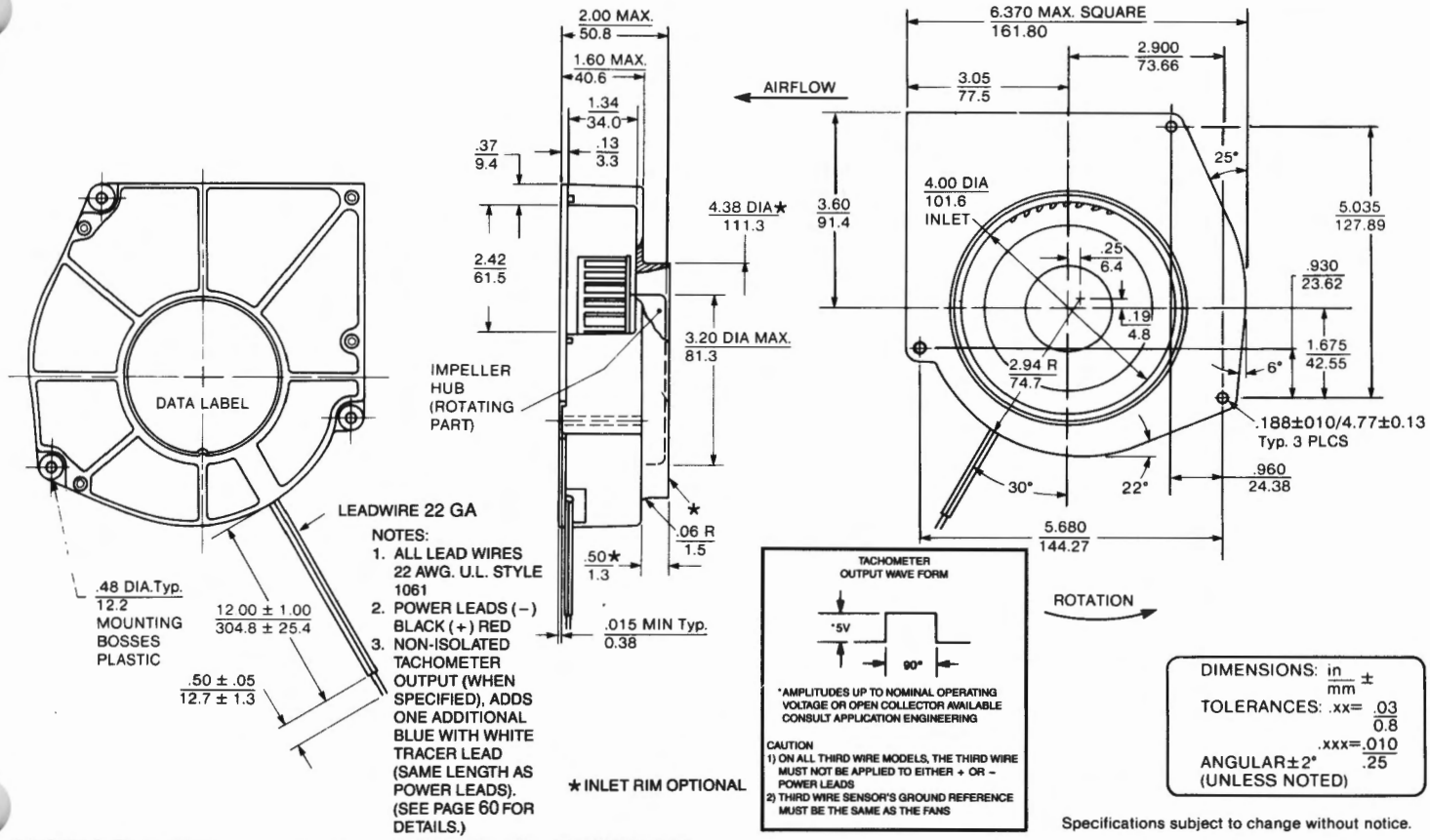

NOTES:
1. ALL LEAD WIRES 22 AWG. U.L. STYLE 1061
2. POWER LEADS (–) BLACK (+) RED
3. NON-ISOLATED TACHOMETER OUTPUT (WHEN SPECIFIED), ADDS ONE ADDITIONAL BLUE WITH WHITE TRACER LEAD (SAME LENGTH AS POWER LEADS). (SEE PAGE 60 FOR DETAILS.)

Specifications subject to change without notice.

MOTOR

Brushless electronic commutation provided by dependable solid state circuitry.
Stainless steel ball bearings.
Electronic locked rotor protection (current limited).
Automatic restart capability.
Polarity protected.
Power transistors heat sink to metal housing.
100% dielectric tested at 600 VAC/1 sec./500 microamps maximum leakage.

CONSTRUCTION

Backplate - single piece die-cast zinc alloy.
Housing and Impeller - polycarbonate, black meets UL94V-0 flammability rating.

EMI

Per MIL STD 461 meets EMI standards per FCC Part 15, Subpart J of Docket 20780, Class A and B radiated and conducted emissions, meets EMI standards per VDE Specification 0871/6.78 for category A and B requirements.

OPTIONS

Capable of furnishing:
Optional Inlet rim
Optional .124 diameter mounting holes
Thermal speed control
Various Fan Performance Sensor (FPS) options, see page 58.
Harness assemblies — See page 106.
Tachometer output-square wave output equal to two pulses per revolution, see page 60.

ACOUSTIC RATINGS (for definitions see page 5)

	VOLTAGE	AIR FLOW		STATIC PRESSURE		PER INCE ANSI S12.11-1987			FREELY SUSPENDED @ 1 METER
Models	DC	CFM	L/Sec	"w.g.	mm H_2O	PSIL dB	SPL dBA @ 3'	NEPL Bels 'A'	dBA
SPD24B_ SPD48B_	NOMINAL	60	28.3	0	0	54.5	59.7	6.97	57.0
		30.5	14.4	0.852	21.60	51.3	58.5	6.65	

LIFE EXPECTANCY

The curve represents the continuous duty life of Spinnaker DC Blowers at a given temperature, after which 90% of the units will be operating.

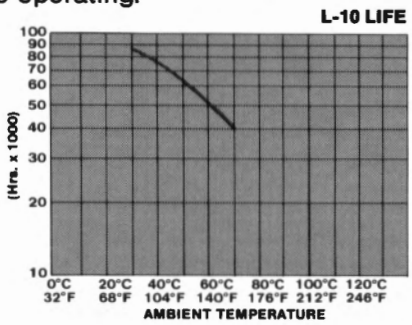

EXAMPLE: When run at 50°C ambient, 90% of the Spinnaker DC units will be running after 62,000 hours continuous duty.

ThermaPro-V™ Technology

Thermal Speed Controlled, Programmable, Voltage Regulated DC Fans & Blowers

At the top of their class.

Give Comair Rotron fans some extra credit. Our unique ThermaPro-V™ circuitry makes them the most precise and versatile airmovers in the industry. To say nothing of how amazingly quiet they are. You can count on TPV to reach your optimal cooling point with minimal noise — without adding on to your system. Now you can design-in Voltage Regulated, Programmable, Thermally Speed Controlled brushless DC fans for completely reliable cooling.

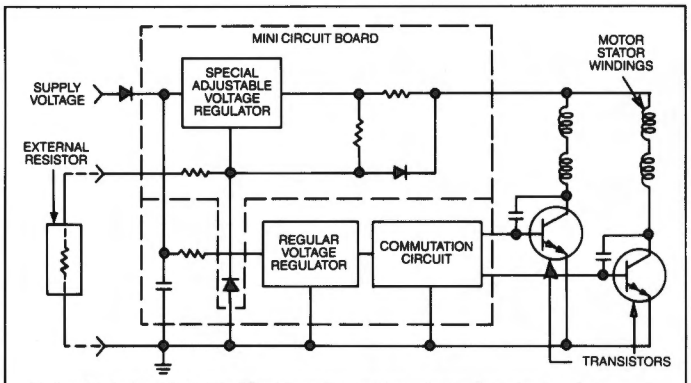

Patented circuit (simplified here) enables single fan design to run at different loads under control of operator.

ThermaPro-V capabilities are achieved through the use of a patented circuit design. A small voltage regulator is placed in series with the motor windings. An additional lead from the control leg of the voltage regulator is brought out of the fan to enable the customer to adjust the voltage to the windings and control the speed of the fan.

Hook Ups

Thermal Speed Control

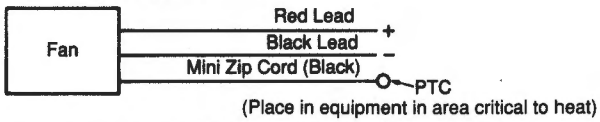

(Place in equipment in area critical to heat)

Speed increases as temperature at PTC location increases.

Programmability

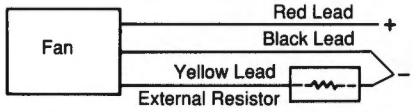

Speed is determined by the value of the external resistor.

Voltage Regulation

Speed stays constant even though voltage fluctuates.

Thermal Speed Control

Advanced degrees are no sweat.

With TPV's closed loop Thermal Speed Control capability, a small thermistor is used to program the fan's voltage regulator to change airflow automatically as a function of temperature. It automatically provides needed cooling in extreme environments and a minimum of noise and power consumption at all times. This results in complete efficiency for your system. And, with two power leads, plus a control and return lead (zip cord) to the PTC thermistor, there's no chance of system shut-down.

Should the sensor fail open, the fan reaches maximum airflow, avoiding any possible damage to sensitive equipment. That means complete reliability for your system.

Programmability

One right answer to the multiple choice question.

You can now specify a single fan to cover a broad range of airflow needs. TPV Programmability lets you easily control the airflow. In fact, it's elementary. External resistors, pulse width modulated signals, zener diodes, thermistor response and other techniques can be used to change fan speed through a single, added control lead wire connected to ground. So forget about expensive circuit redesign or taking the heat from voltage dropping devices. One TPV Programmable fan gives you a vastly extended performance range, simplified system circuitry, reduced specification needs and highly flexible programming options.

Voltage Regulation

Current events — they're history.

ThermaPro-V solves the problem of power supply voltage fluctuation forever. Internal Voltage Regulation circuitry automatically regulates the input voltage to the motor windings to compensate for any fluctuation caused by a change in the power supply load. With TPV, you always get just the airflow you need — with predictable noise and power levels. And its current limiting circuits keep start-up and locked rotor currents low.

ThermaPro-V™ Technology

Thermal Speed Controlled, Programmable, Voltage Regulated DC Fans & Blowers

At the top of their class.

Give Comair Rotron fans some extra credit. Our unique ThermaPro-V™ circuitry makes them the most precise and versatile airmovers in the industry. To say nothing of how amazingly quiet they are. You can count on TPV to reach your optimal cooling point with minimal noise — without adding on to your system. Now you can design-in Voltage Regulated, Programmable, Thermally Speed Controlled brushless DC fans for completely reliable cooling.

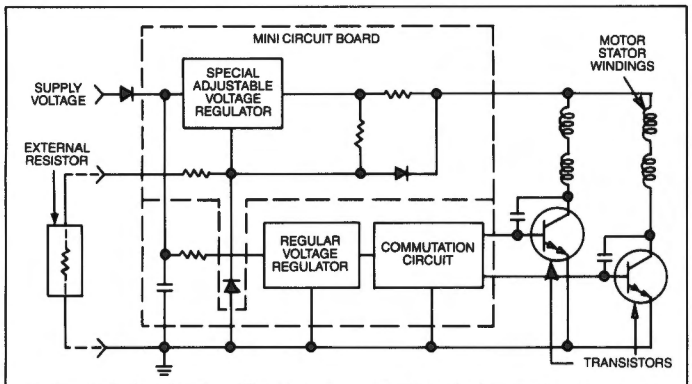

Patented circuit (simplified here) enables single fan design to run at different loads under control of operator.

ThermaPro-V capabilities are achieved through the use of a patented circuit design. A small voltage regulator is placed in series with the motor windings. An additional lead from the control leg of the voltage regulator is brought out of the fan to enable the customer to adjust the voltage to the windings and control the speed of the fan.

Hook Ups

Thermal Speed Control

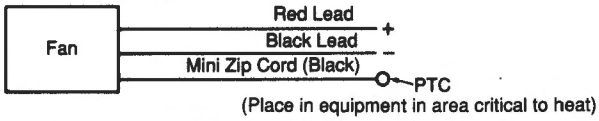

Speed increases as temperature at PTC location increases.

Programmability

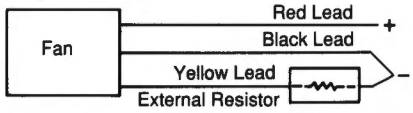

Speed is determined by the value of the external resistor.

Voltage Regulation

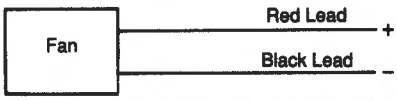

Speed stays constant even though voltage fluctuates.

Thermal Speed Control

Advanced degrees are no sweat.

With TPV's closed loop Thermal Speed Control capability, a small thermistor is used to program the fan's voltage regulator to change airflow automatically as a function of temperature. It automatically provides needed cooling in extreme environments and a minimum of noise and power consumption at all times. This results in complete efficiency for your system. And, with two power leads, plus a control and return lead (zip cord) to the PTC thermistor, there's no chance of system shut-down.

Should the sensor fail open, the fan reaches maximum airflow, avoiding any possible damage to sensitive equipment. That means complete reliability for your system.

Programmability

One right answer to the multiple choice question.

You can now specify a single fan to cover a broad range of airflow needs. TPV Programmability lets you easily control the airflow. In fact, it's elementary. External resistors, pulse width modulated signals, zener diodes, thermistor response and other techniques can be used to change fan speed through a single, added control lead wire connected to ground. So forget about expensive circuit redesign or taking the heat from voltage dropping devices. One TPV Programmable fan gives you a vastly extended performance range, simplified system circuitry, reduced specification needs and highly flexible programming options.

Voltage Regulation

Current events — they're history.

ThermaPro-V solves the problem of power supply voltage fluctuation forever. Internal Voltage Regulation circuitry automatically regulates the input voltage to the motor windings to compensate for any fluctuation caused by a change in the power supply load. With TPV, you always get just the airflow you need — with predictable noise and power levels. And its current limiting circuits keep start-up and locked rotor currents low.

Before ThermaPro-V

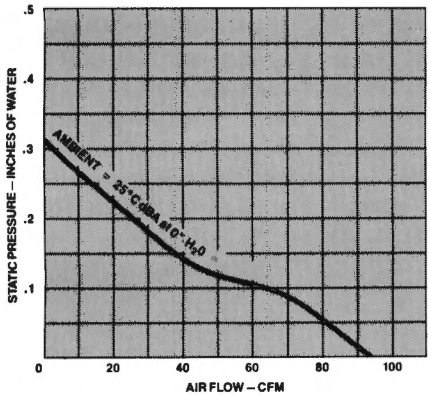

For most applications, the lower performance was acceptable. Since the fan was specified for worst case conditions, the higher performance fan was used, creating unnecessary noise and power consumption.

After ThermaPro-V

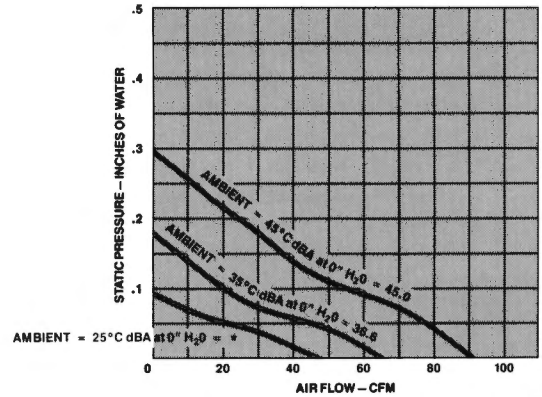

ThermaPro-V™ Thermally Speed Controlled fans, such as the Muffin® DC allow minimum noise for most applications, while automatically providing needed cooling in extreme environments.

* Data below ambient (measurable) level.

Before ThermaPro-V

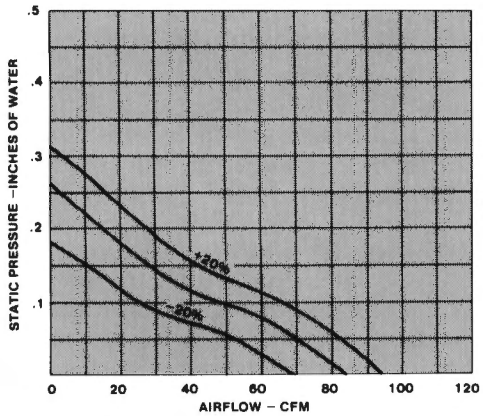

Typical 4.7" brushless DC fan. Maximum performance range ± 20%.

After ThermaPro-V

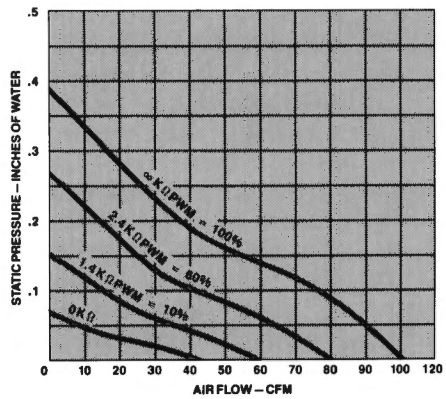

ThermaPro-V™ Programmable Muffin® DC has greatly increased performance range, reducing user inventories. Single fan may be customized over wide number of applications.

Before ThermaPro-V

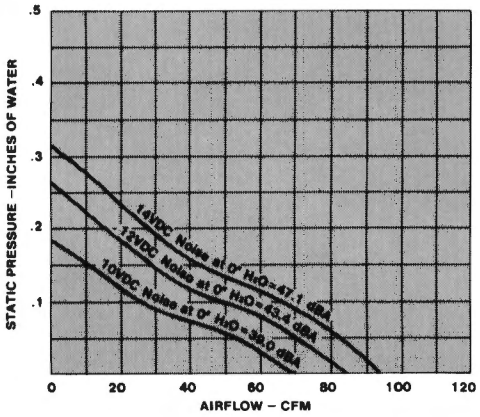

Typical 4.7" brushless DC fan performance changes resulting from power supply voltage fluctuation.

After ThermaPro-V

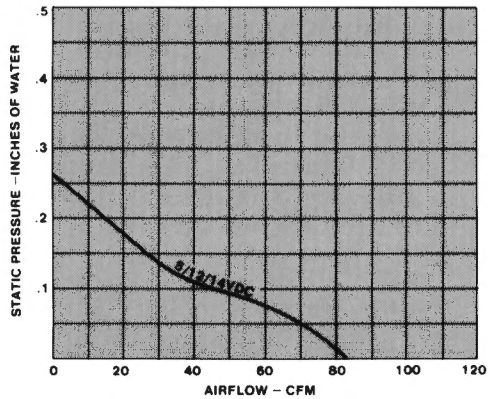

Typical Muffin® DC fan with ThermaPro-V™ Technology. Performance remains constant in regulated voltage range, even if power supply output voltage fluctuates.

ThermaPro-V™

SPRINT® DC

FEATURES

- ☐ Thermal Speed Control-change airflow as function of temperature
- ☐ Programmability—change airflow via programming resistors, pulse width modulation
- ☐ Voltage Regulation—internal voltage regulating circuit integral to the fan
- ☐ Automatic restart capability
- ☐ Current Limited
- ☐ Size - 3.15″ square x 1.25″ deep (80.0 mm x 32.0 mm)
- ☐ 7.5 to 43 CFM (3.5 to 20 L/Sec)
- ☐ Weight - 6.3 oz (18 Kg)
- ☐ UL Yellow Card Recognized—File No. E31293
- ☐ CSA Certified—File No. LR52898
- ☐ TUV approved to IEC 950, VDE 0730 , License R97229

THERMAL SPEED CONTROL

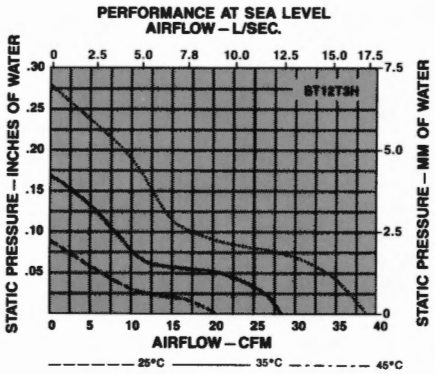

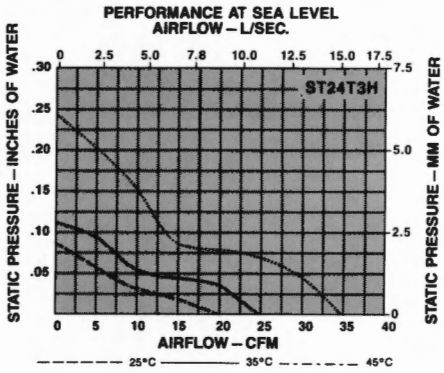

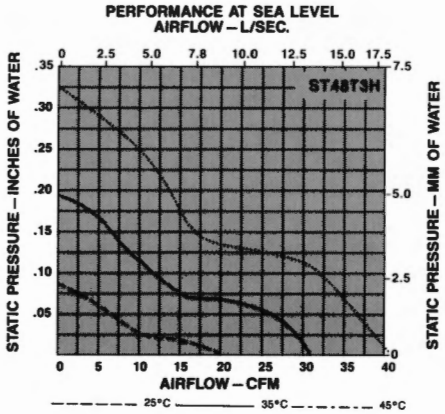

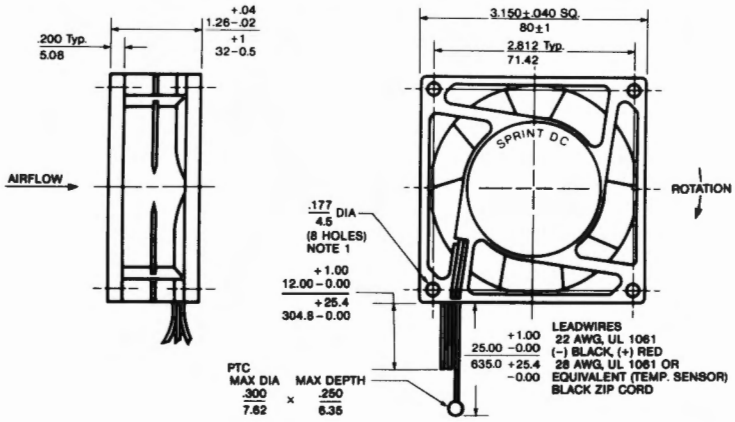

NOTE 1: DIA AT LARGE END OF DRAFT

SPECIFICATIONS

Model No	Part No	Bearing	Voltage Nominal	Voltage Range	Ambient Temp. °C	Regulated Voltage Range	Watts	Running Current mA	Locked Rotor mA	Inrush Current mA	RPM	CFM	L/S	Sound Pressure Level dBA	Operating Temp. Range°C
*ST12T3H	032396	Sleeve	12	6-14	45	12-14	5.0	420	1050	1050	3900	38	18	42.7	–10 to +70
					35	9-14	3.6	300	950	950	2900	28	13	37.8	–10 to +70
					25	7-14	2.9	240	750	750	2100	20	10	30.0	–10 to +70
* ST24T3H	032397	Sleeve	24	12-28	45	24-28	3.8	160	440	440	3500	34	16	40.2	–10 to +70
					35	17-28	2.9	120	390	390	2500	24	11	34.2	–10 to +70
					25	12-28	2.3	95	320	320	2100	20	10	30.0	–10 to +70
* ST48T3H	032398	Sleeve	48	24-56	45	44-56	6.5	135	200	200	4250	41	19	44.5	–10 to +70
					35	31-56	4.3	90	200	200	3150	31	14	39.2	–10 to +70
					25	19-56	2.9	60	160	160	2100	20	10	30.0	–10 to +70

All figures are nominal, free delivery values at sea level.

† 3′ (0.91M) from fan

* Distributor Item.

All specifications subject to change without notice.

PROGRAMMABILITY

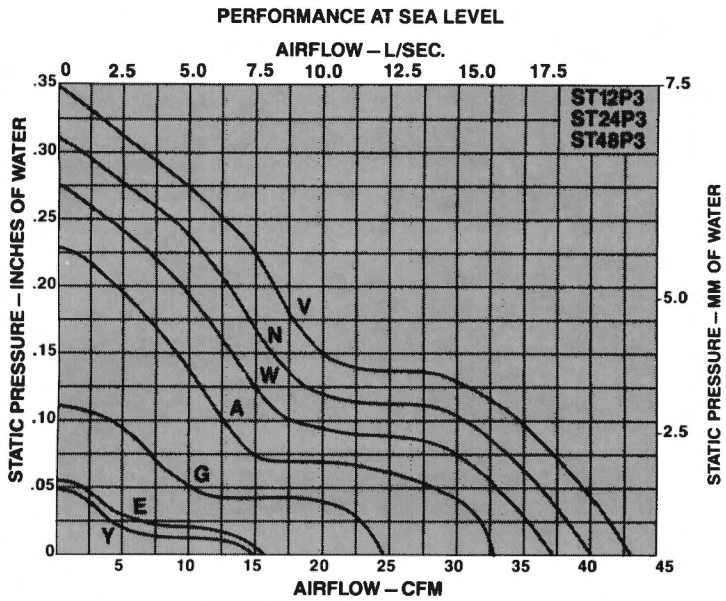

NOTE: REFER TO STANDARD SPRINT DC FOR DIMENSIONS

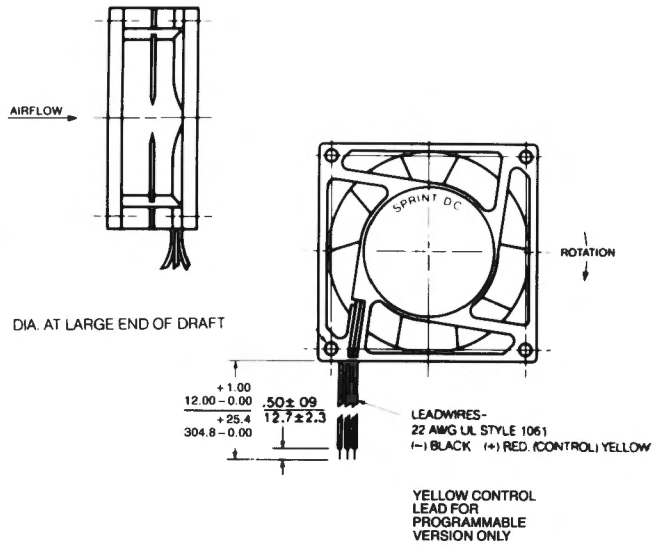

SPECIFICATIONS

Model No	Part No	Bearing	Voltage Nominal	Voltage Range	Programming Method R(KΩ)	Programming Method PWM**	Regulated Voltage Range	Watts	Running Current mA	Locked Rotor mA	Inrush Current mA	Code (see above curves)	RPM	CFM	L/S	Sound Pressure Level† dBA	Operating Temp. Range°C
					∞	N/A	N/A	5.0	420	1050	1050	W	3850	37	18	42.1	–10 to +70
					3.3	90%	12-14	4.4	370	1000	1000	A	3400	33	16	39.9	–10 to +60
ST12P3	032386	Sleeve	12	6-14	1.6	20%	10-14	3.1	260	850	850	G	2500	24	11	34.2	–10 to +60
					.2	10%	8-14	2.4	200	580	580	E	1700	16	8	20.9	–10 to +60
					0	N/A	6-14	2.2	180	540	540	Y	1600	15	7	*	–10 to +60
					∞	N/A	N/A	4.8	200	450	450	N	4100	40	19	44.0	–10 to +70
					16.5	90%	22-28	3.8	160	430	430	A	3400	33	16	39.9	–10 to +60
ST24P3	032387	Sleeve	24	12-28	6.0	20%	17-28	2.6	110	390	390	G	2500	24	11	34.2	–10 to +60
					.8	10%	12-28	2.2	90	280	280	E	1700	16	8	20.9	–10 to +60
					0	N/A	12-28	1.9	80	250	250	Y	1600	15	7	*	–10 to +60
					∞	N/A	N/A	6.2	130	210	210	V	4450	43	20	47.1	–10 to +70
					13.0	N/A	38-56	4.6	95	200	200	A	3400	33	16	39.9	–10 to +60
ST48P3	032388	Sleeve	48	24-56	6.0	N/A	30-56	3.4	70	180	180	G	2500	24	11	34.2	–10 to +60
					.4	N/A	24-56	2.4	50	130	130	E	1700	16	8	20.9	–10 to +60
					0	N/A	24-56	2.4	50	120	120	Y	1600	15	7	*	–10 to +60

All figures are nominal, free delivery values at sea level.
All specifications subject to change without notice.

† 3' (0.91M) from fan
*Data below background
**Pulse width modulated signal percentage on time at 20 kHz.

VOLTAGE REGULATION SPECIFICATIONS

Model No	Part No	Bearing	Voltage Nominal	Voltage Range	Regulated Voltage Range	Watts	Running Current mA	Locked Rotor mA	Inrush Current mA	Code (see above curves)	RPM	CFM	L/S	Sound Pressure Level† dBA	Operating Temp. Range°C
ST12A3V	032406	Sleeve	12	6-14	12-14	4.4	370	1000	1000	A	3400	33	16	39.9	–10 to +60
ST24A3V	032407	Sleeve	24	12-28	22-28	3.8	160	430	430	A	3400	33	16	39.9	–10 to +60
ST48A3V	032408	Sleeve	48	24-56	38-56	4.6	95	200	200	A	3400	33	16	39.9	–10 to +60
ST12G3V	032409	Sleeve	12	6-14	10-14	3.1	260	850	850	G	2500	24	11	34.2	–10 to +60
ST24G3V	032410	Sleeve	24	12-28	17-28	2.6	110	390	390	G	2500	24	11	34.2	–10 to +60
ST48G3V	032411	Sleeve	48	24-56	30-56	3.4	70	180	180	G	2500	24	11	34.2	–10 to +60
ST12E3V	032412	Sleeve	12	6-14	8-14	2.4	200	580	580	E	1700	16	8	20.9	–10 to +60
ST24E3V	032413	Sleeve	24	12-28	12-28	2.2	90	280	280	E	1700	16	8	20.9	–10 to +60
ST48E3V	032414	Sleeve	48	24-56	24-56	2.4	50	130	130	E	1700	16	8	20.9	–10 to +60

All figures are nominal, free delivery values at sea level.

† 3' (0.91M) from fan
All specifications subject to change without notice

ThermaPro-V™

MUFFIN® DC

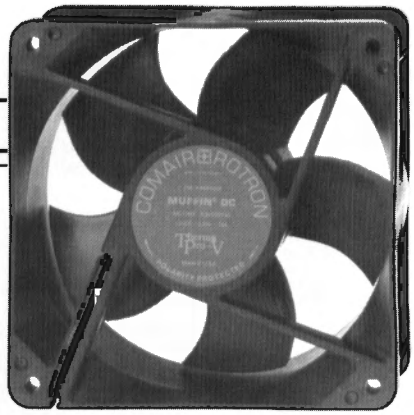

FEATURES

- ☐ Thermal Speed Control-change airflow as function of temperature
- ☐ Programmability—change airflow via programming resistors, pulse width modulation
- ☐ Voltage Regulation—internal voltage regulating circuit integral to the fan
- ☐ Automatic Restart Capability
- ☐ Current Limited
- ☐ Size - 4.73″ square x 1.26″ deep (120 mm x 32 mm)
- ☐ 22 to 106 CFM (10 to 50.2 L/sec)
- ☐ Weight - 8.5 oz (.24 Kg)
- ☐ UL Yellow Card Recognized—File No. E31293
- ☐ CSA certified—File No. LR52898
- ☐ TUV Approved to IEC 950, VDE 0730, License R97229

THERMAL SPEED CONTROL

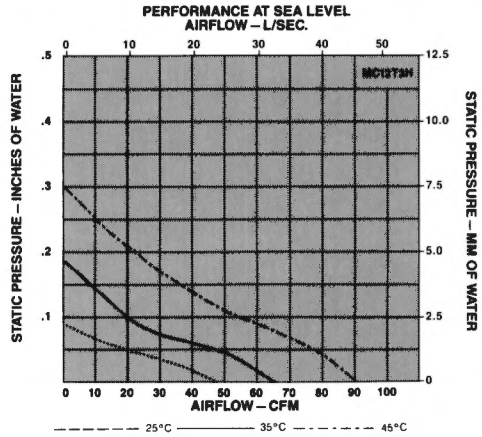

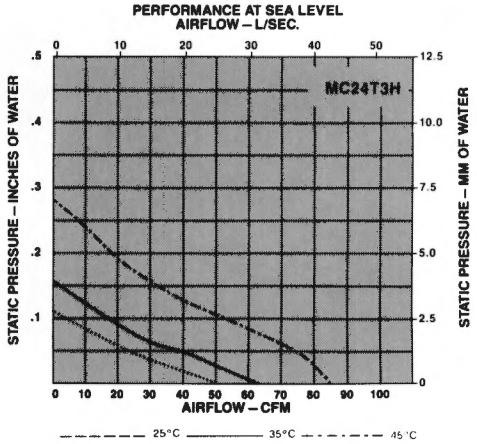

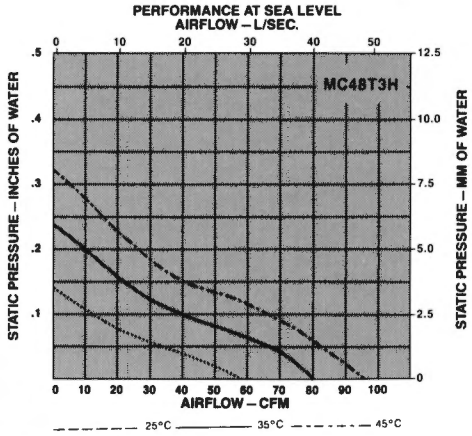

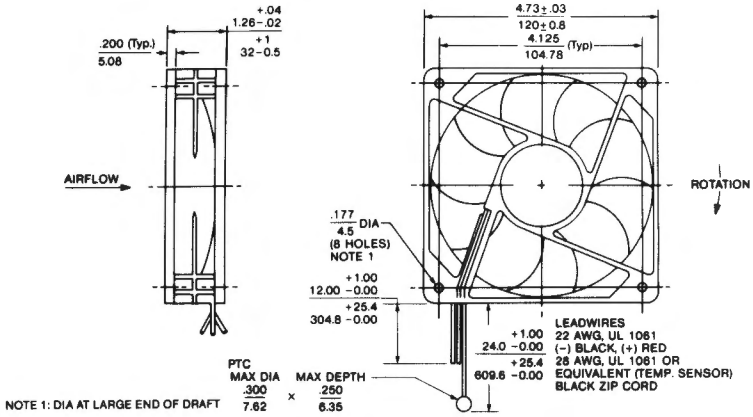

SPECIFICATIONS

Model No	Part No	Bearing	Voltage Nominal	Voltage Range	Ambient Temp. °C	Regulated Voltage Range	Watts	Running Current mA	Locked Rotor mA	Inrush Current mA	RPM	CFM	L/S	Sound Pressure Level† dBA	Operating Temp. Range °C
					45	N/A	6.4	540	1000	1000	3200	90	42	45.0	– 10 to + 70
* MC12T3H	032399	Sleeve	12	6-14	35	10-14	4.1	350	810	810	2300	64	30	36.6	– 10 to + 70
					25	7-14	2.8	230	610	610	1700	47	22	*	– 10 to + 70
					45	19-28	5.2	220	400	400	3000	84	40	43.7	– 10 to + 70
* MC24T3H	032400	Sleeve	24	12-28	35	13-28	3.7	150	360	360	2200	61	29	34.0	– 10 to + 70
					25	12-28	3.1	130	325	325	1800	50	24	*	– 10 to + 70
					45	45-56	8.0	170	200	200	3400	95	45	45.5	– 10 to + 70
* MC48T3H	032401	Sleeve	48	24-56	35	36-56	6.5	140	200	200	2850	80	38	42.2	– 10 to + 70
					25	22-56	4.3	90	175	175	2000	56	26	27.0	– 10 to + 70

All figures are nominal, free delivery values at sea level.

† 3′ (0.91M) from fan
*Data below background

* Distributor Item.

All specifications subject to change without notice.

PROGRAMMABILITY

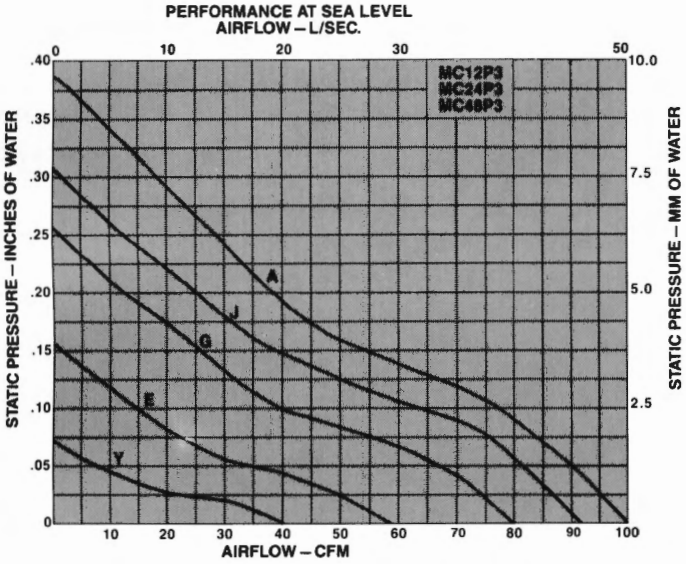

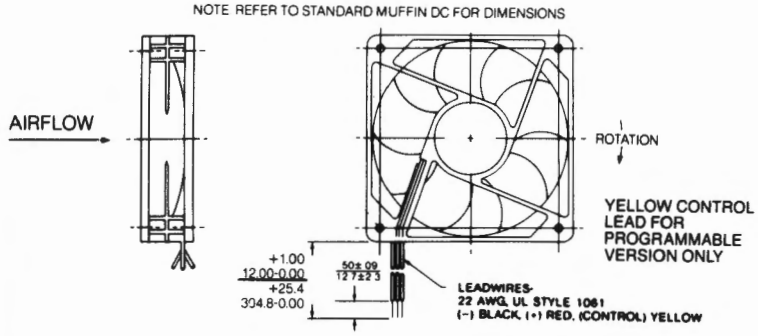

SPECIFICATIONS

Model No	Part No	Bearing	Voltage Nominal	Voltage Range	Programming Method R(KΩ)	Programming Method PWM**	Regulated Voltage Range	Watts	Running Current mA	Locked Rotor mA	Inrush Current mA	Code (see above curves)	RPM	CFM	L/S	Sound Pressure Level† dBA	Operating Temp. Range °C
					∞	100%	N/A	6.2	510	1050	1050	J	3250	91	43	45.2	–10 to +70
					2.4	60%	11-14	5.5	460	970	970	G	2850	80	38	42.2	–10 to +55
MC12P3	032389	Sleeve	12	6-14	1.4	10%	10-14	3.6	300	770	770	E	2150	58	27	33.7	–10 to +55
					0	N/A	7-14	2.4	200	510	510	Y	1450	40	19	*	–10 to +55
					∞	100%	N/A	6.6	275	460	460	A	3500	97	46	46.0	–10 to +70
					16.5	85%	22-28	6.0	250	450	450	J	3250	91	43	45.2	–10 to +60
MC24P3	032390	Sleeve	24	12-28	10.2	60%	18-28	4.8	200	440	440	G	2850	80	38	42.2	–10 to +55
					4.4	10%	16-28	3.4	140	360	360	E	2150	58	27	33.7	–10 to +55
					0	N/A	10-28	2.4	100	260	260	Y	1450	40	19	*	–10 to +55
					∞	N/A	N/A	8.2	170	210	210	A	3600	100	47	46.5	–10 to +70
					16.0	N/A	39-56	6.7	140	205	205	J	3250	91	43	45.2	–10 to +60
MC48P3	032391	Sleeve	48	24-56	11.5	N/A	34-56	5.5	115	200	200	G	2850	80	38	42.2	–10 to +55
					6.4	N/A	26-56	4.3	90	180	180	E	2150	58	27	33.7	–10 to +55
					0	N/A	18-56	2.9	60	125	125	Y	1450	40	19	*	–10 to +55

All figures are nominal, free delivery values at sea level.
All specifications subject to change without notice.

†3′ (0.91M) from fan
*Data below background
**Pulse width modulated signal percentage on time at 20 kHz.

VOLTAGE REGULATION SPECIFICATIONS

Model No	Part No	Bearing	Voltage Nominal	Voltage Range	Regulated Voltage Range	Watts	Running Current mA	Locked Rotor mA	Inrush Current mA	Code (see above curves)	RPM	CFM	L/S	Sound Pressure Level† dBA	Operating Temp. Range °C
MC12J3V	032415	Sleeve	12	6-14	11-14	6.2	510	1050	1050	J	3250	91	43	45.2	–10 to +60
MC24J3V	032416	Sleeve	24	12-28	22-28	5.9	250	450	450	J	3250	91	43	45.2	–10 to +60
MC48J3V	032417	Sleeve	48	24-56	39-56	6.7	140	205	205	J	3250	91	43	45.2	–10 to +60
MC12G3V	032418	Sleeve	12	6-14	11-14	5.5	460	970	970	G	2850	80	38	42.2	–10 to +55
MC24G3V	032419	Sleeve	24	12-28	18-28	4.8	200	440	440	G	2850	80	38	42.2	–10 to +55
MC48G3V	032420	Sleeve	48	24-56	34-56	5.5	115	200	200	G	2850	80	38	42.2	–10 to +55
MC12E3V	032421	Sleeve	12	6-14	11-14	3.6	300	770	770	E	2150	58	27	33.7	–10 to +55
MC24E3V	032422	Sleeve	24	12-28	16-28	3.4	140	360	360	E	2150	58	27	33.7	–10 to +55
MC48E3V	032423	Sleeve	48	24-56	26-56	4.3	90	180	180	E	2150	58	27	33.7	–10 to +55

All figures are nominal, free delivery values at sea level. All specifications subject to change without notice.

† 3′ (0.91M) from fan

ThermaPro-V™

MAJOR® DC, ALSO AVAILABLE IN MAJOR® DC (QUIET)

FEATURES

- ☐ Thermal Speed Control-change airflow as function of temperature
- ☐ Programmability—change airflow via programming resistors, pulse width modulation
- ☐ Voltage Regulation—internal voltage regulating circuit integral to the fan
- ☐ Automatic restart capability
- ☐ Current Limited
- ☐ Size - 6.75″ x 5.92″ x 2.00″ deep (171.5mm x 150.4mm x 50.8mm)
- ☐ 80 to 240 CFM (38 to 113 L/sec)
- ☐ Weight - 1.84 lbs. (.84 Kg)
- ☐ UL Yellow Card Recognized—File No. E31293
- ☐ CSA certified—File No. LR52898
- ☐ TUV approved to IEC 950, VDE 0730, Licenses R97152 and R97188

THERMAL SPEED CONTROL

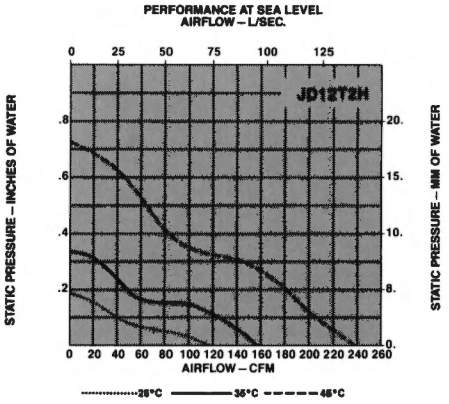

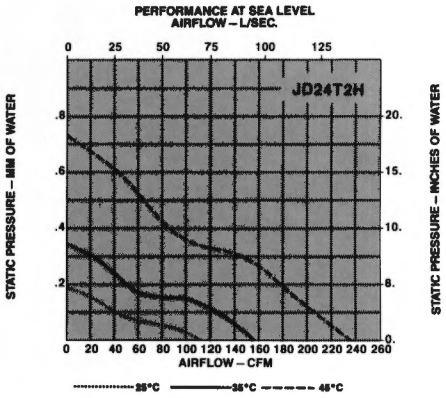

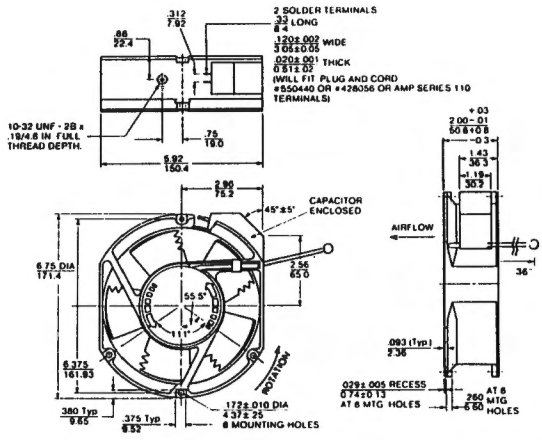

SPECIFICATIONS

Model No	Part No	Bearing	Voltage Nominal	Voltage Range	Ambient Temp. °C	Regulated Voltage Range	Watts	Running Current mA	Locked Rotor mA	Inrush Current mA	RPM	CFM	L/S	Sound Pressure Level† dBA	Operating Temp. Range °C
					45	12-14	25	2100	3700	3700	3300	232	110	55	– 10 to + 70
* JD12T2H	030661	Ball	12	6-14	35	8-14	15	1275	3700	3700	2250	153	72	46	– 10 to + 70
					25	7-14	11	900	3450	3450	1700	113	53	44	– 10 to + 70
					45	24-28	23	1000	1600	1600	3350	235	111	55	– 10 to + 70
* JD24T2H	030606	Ball	24	12-28	35	15-28	13	540	1725	1725	2250	153	72	46	– 10 to + 70
					25	11-28	9	390	1600	1600	1700	113	53	44	– 10 to + 70
					45	44-56	21	450	760	760	3350	235	111	55	– 10 to + 70
* JD48T2H	030607	Ball	48	24-56	35	35-56	13	260	810	810	2250	153	72	46	– 10 to + 70
					25	26-56	10	210	750	750	1700	113	53	44	– 10 to + 70

* Distributor Item. All figures are nominal, free delivery values at sea level. All specifications subject to change without notice. † 3′ (0.91M) from fan

PROGRAMMABILITY

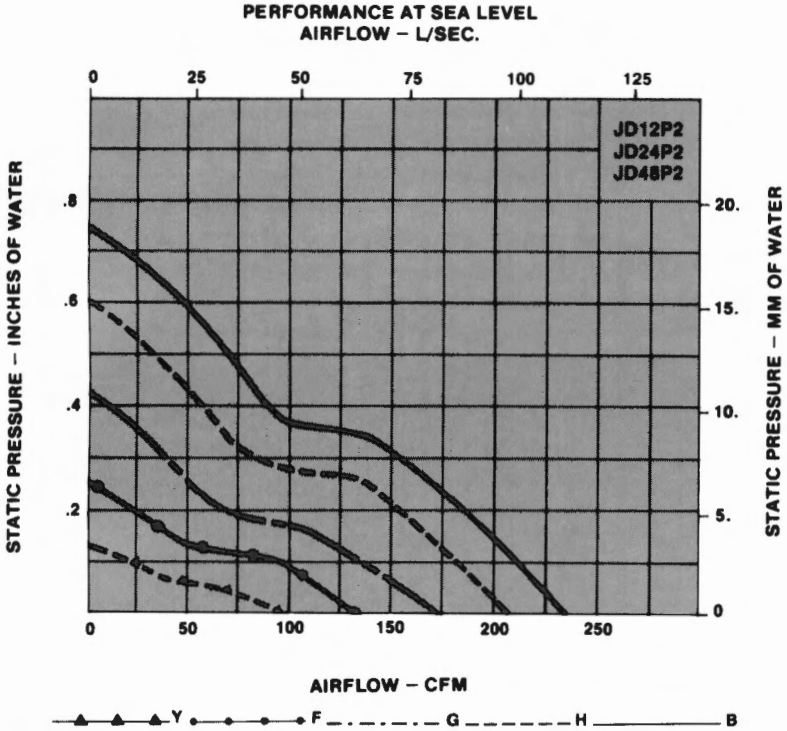

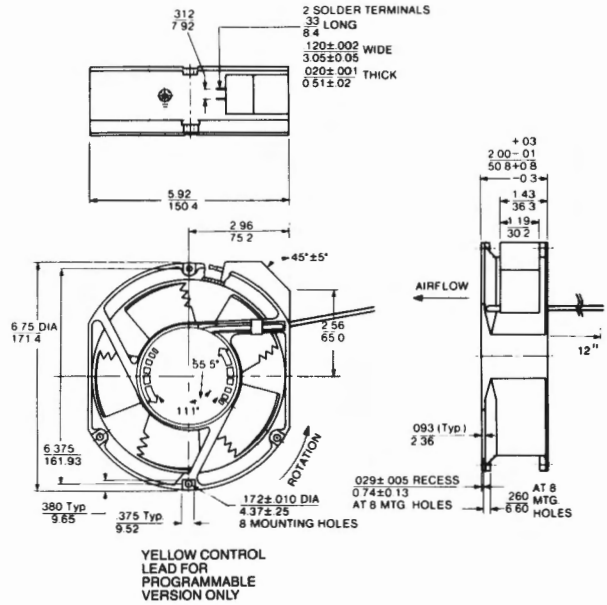

SPECIFICATIONS

Model No	Part No	Bearing	Voltage Nominal	Voltage Range	Programming Method R(KΩ)	Programming Method PWM**	Regulated Voltage Range	Watts	Running Current mA	Locked Rotor mA	Inrush Current mA	Code (See above curves)	RPM	CFM	L/S	Sound Pressure Level† dBA	Operating Temp. Range°C
					∞	100%	N/A	29	2400	3400	3400	B	3350	235	111	55	−10 to +70
					4.8	80%	12-14	26	2150	3400	3400	H	3050	205	97	52	−10 to +60
JD12P2	030662	Ball	12	6-14	3.2	65%	10-14	19	1600	3350	3350	G	2500	170	80	48	−10 to +60
					1.8	10%	8-14	14	1200	3200	3200	F	1950	135	64	45	−10 to +60
					0	N/A	6-14	8	650	2500	2500	Y	1200	80	38	42	−10 to +60
					∞	100%	N/A	24	1000	1600	1600	B	3350	235	111	55	−10 to +70
					12.0	80%	22-28	21	890	1600	1600	H	3050	205	97	52	−10 to +60
JD24P2	030663	Ball	24	12-28	7.8	65%	18-28	16	670	1500	1500	G	2500	170	80	48	−10 to +60
					4.5	10%	14-28	12	500	1200	1200	F	1950	135	64	45	−10 to +60
					0	N/A	12-28	7	290	1100	1100	Y	1200	80	38	42	−10 to +60
					∞	100%	N/A	22	450	900	900	B	3350	235	111	55	−10 to +70
					33.5	80%	42-56	20	410	860	860	H	3050	205	97	52	−10 to +60
JD48P2	030664	Ball	48	24-56	21.0	65%	34-56	15	310	820	820	G	2500	170	80	48	−10 to +60
					10.5	10%	28-56	11	230	810	810	F	1950	135	64	45	−10 to +60
					0	N/A	18-56	7	140	580	580	Y	1200	80	38	42	−10 to +60

All figures are nominal, free delivery values at sea level.
All specifications subject to change without notice.

†3' (0.91M) from fan
**Pulse width modulated signal percentage on time at 20 kHz.

VOLTAGE REGULATION SPECIFICATIONS

Model No	Part No	Bearing	Voltage Nominal	Voltage Range	Regulated Voltage Range	Watts	Running Current mA	Locked Rotor mA	Inrush Current mA	Code (see Above curves)	RPM	CFM	L/S	Sound Pressure Level† dBA	Operating Temp. Range°C
JD12H2V	030665	Ball	12	6-14	12-14	26	2150	3400	3400	H	3050	205	97	52	−10 to +60
JD24H2V	030666	Ball	24	12-28	22-28	21	810	1600	1600	H	3050	205	97	52	−10 to +60
JD48H2V	030667	Ball	48	24-56	42-56	20	410	860	860	H	3050	205	97	52	−10 to +60
JD12G2V	030668	Ball	12	6-14	10-14	19	1600	3350	3350	G	2500	170	80	48	−10 to +60
JD24G2V	030669	Ball	24	12-28	18-28	16	670	1500	1500	G	2500	170	80	48	−10 to +60
JD48G2V	030670	Ball	48	24-56	42-56	15	310	820	820	G	2500	170	80	48	−10 to +60
JD12F2V	030671	Ball	12	6-14	8-14	14	1200	3200	3200	F	1950	135	64	45	−10 to +60
JD24F2V	030672	Ball	24	12-28	14-28	12	500	1200	1200	F	1950	135	64	45	−10 to +60
JD48F2V	030673	Ball	48	24-56	26-56	11	230	810	810	F	1950	135	64	45	−10 to +60

All figures are nominal, free delivery values at sea level. All specifications subject to change without notice.

† 3' (0.91M) from fan

ThermaPro-V™

PATRIOT® DC, ALSO AVAILABLE IN PATRIOT® DC (QUIET)

FEATURES

- ☐ Thermal Speed Control-change airflow as function of temperature
- ☐ Programmability—change airflow via programming resistors, pulse width modulation
- ☐ Voltage Regulation—internal voltage regulating circuit integral to the fan
- ☐ Automatic restart capability
- ☐ Current Limited
- ☐ Size - 6.75″ diameter x 2.00″ deep (171.5mm x 50.8mm)
- ☐ 80 to 240 CFM (38 to 113 L/sec)
- ☐ Weight - 1.84 lbs. (.84 Kg)
- ☐ UL Yellow Card Recognized—File No. E31293
- ☐ CSA certified—File No. LR52898
- ☐ TUV approved to IEC 950, VDE 0730, Licenses R97152 and R97188

THERMAL SPEED CONTROL

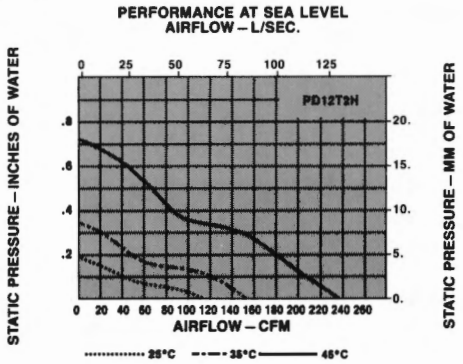

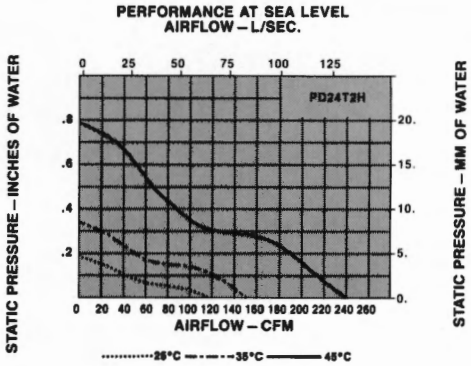

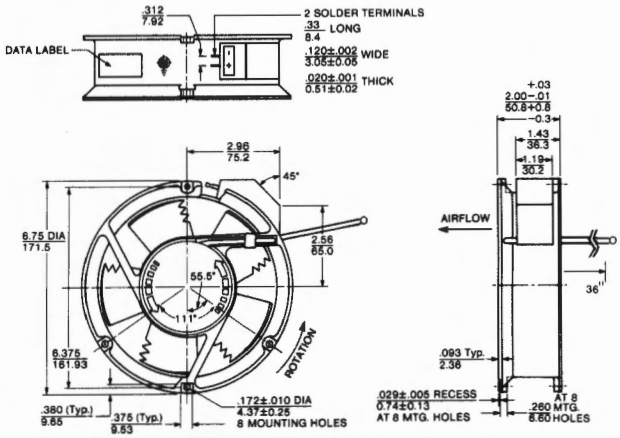

SPECIFICATIONS

Model No	Part No	Bearing	Voltage Nominal	Voltage Range	Ambient Temp. °C	Regulated Voltage Range	Watts	Running Current mA	Locked Rotor mA	Inrush Current mA	RPM	CFM	L/S	Sound Pressure Level† dBA	Operating Temp. Range °C
					45	12-14	25	2100	3700	3700	3300	232	110	53	−10 to +70
• PD12T2H	030647	Ball	12	6-14	35	8-14	15	1275	3700	3700	2250	153	72	44	−10 to +70
					25	7-14	11	900	3450	3450	1700	113	53	42	−10 to +70
					45	24-28	24	1000	1600	1600	3350	235	111	53	−10 to +70
• PD24T2H	030642	Ball	24	12-28	35	15-28	13	540	1725	1725	2250	153	72	44	−10 to +70
					25	11-28	9	390	1600	1600	1700	113	53	42	−10 to +70
					45	44-56	21	450	760	760	3350	235	111	53	−10 to +70
• PD48T2H	030648	Ball	48	24-56	35	35-56	13	260	810	810	2250	153	72	44	−10 to +70
					25	26-56	10	210	750	750	1700	113	53	42	−10 to +70

All figures are nominal, free delivery values at sea level.
All specifications subject to change without notice.

† 3′ (0.91M) from fan

• Distributor Item.

PROGRAMMABILITY

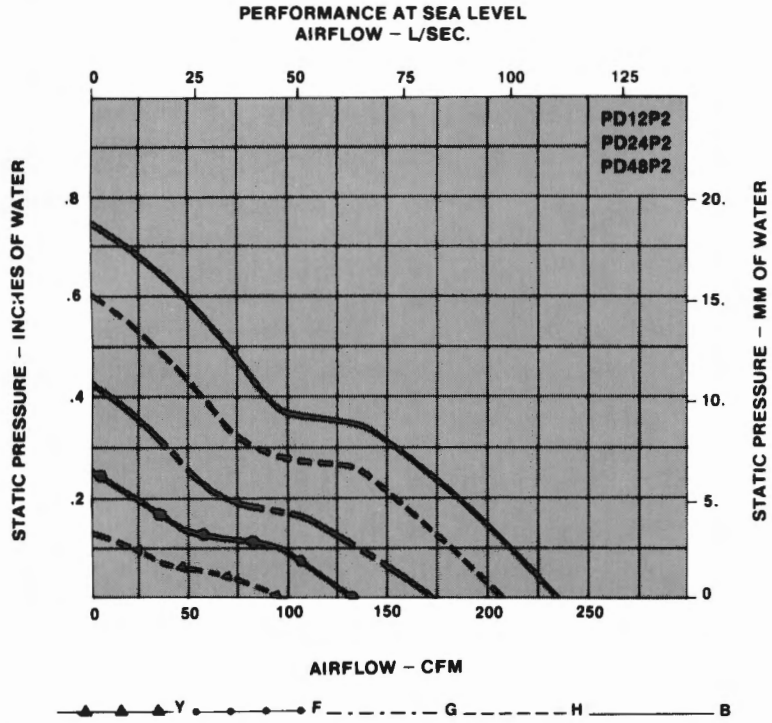

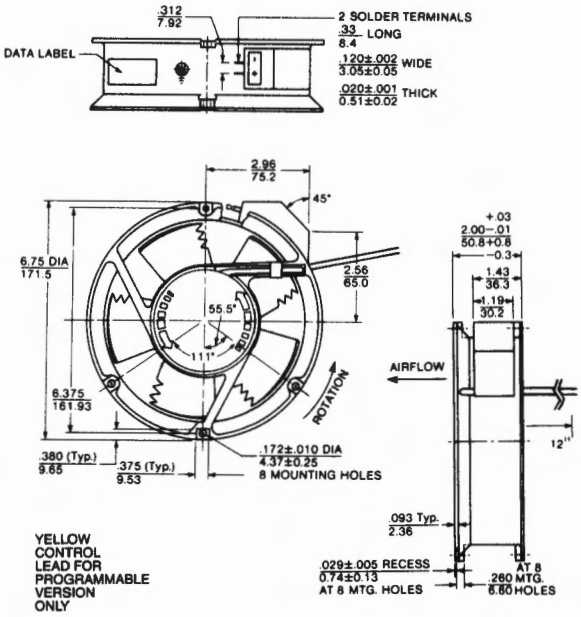

SPECIFICATIONS

Model No.	Part No	Bearing	Voltage Nominal	Voltage Range	Programming Method R(KΩ)	Programming Method PWM**	Regulated Voltage Range	Watts	Running Current mA	Locked Rotor mA	Inrush Current mA	Code (see above curves)	RPM	CFM	L/S	Sound Pressure Level† dBA	Operating Temp. Range °C
PD12P2	030649	Ball	12	6-14	∞	100%	N/A	29	2400	3400	3400	B	3350	235	111	53	−10 to +70
					4.8	80%	12-14	26	2150	3400	3400	H	3050	205	97	50	−10 to +60
					3.2	65%	10-14	19	1600	3350	3350	G	2500	170	80	46	−10 to +60
					1.8	10%	8-14	14	1200	3200	3200	F	1950	135	64	43	−10 to +60
					0	N/A	6-14	8	650	2500	2500	Y	1200	80	38	40	−10 to +60
PD24P2	030650	Ball	24	12-28	∞	100%	N/A	24	1000	1600	1600	B	3350	235	111	53	−10 to +70
					12.0	80%	22-28	21	890	1600	1600	H	3050	205	97	50	−10 to +60
					7.8	65%	18-28	16	670	1500	1500	G	2500	170	80	46	−10 to +60
					4.5	10%	14-28	12	500	1200	1200	F	1950	135	64	43	−10 to +60
					0	N/A	12-28	7	290	1100	1100	Y	1200	80	38	40	−10 to +60
PD48P2	030651	Ball	48	24-56	∞	100%	N/A	22	450	900	900	B	3350	235	111	53	−10 to +70
					33.5	80%	42-56	20	410	860	860	H	3050	205	97	50	−10 to +60
					21.0	65%	34-56	15	310	820	820	G	2500	170	80	46	−10 to +60
					10.5	10%	28-56	11	230	810	810	F	1950	135	64	43	−10 to +60
					0	N/A	18-56	7	140	580	580	Y	1200	80	38	40	−10 to +60

All figures are nominal, free delivery values at sea level.
All specifications subject to change without notice.

†3' (0.91M) from fan
**Pulse width modulated signal percentage on time at 20 kHz.

VOLTAGE REGULATION SPECIFICATIONS

Model No	Part No	Bearing	Voltage Nominal	Voltage Range	Regulated Voltage Range	Watts	Running Current mA	Locked Rotor mA	Inrush Current mA	Code (see above curves)	RPM	CFM	L/S	Sound Pressure Level† dBA	Operating Temp. Range °C
PD12H2V	030652	Ball	12	6-14	12-14	26	2150	3400	3400	H	3050	205	97	50	−10 to +60
PD24H2V	030653	Ball	24	12-28	22-28	21	890	1600	1600	H	3050	205	97	50	−10 to +60
PD48H2V	030654	Ball	48	24-56	42-56	20	410	860	860	H	3050	205	97	50	−10 to +60
PD12G2V	030655	Ball	12	6-14	10-14	19	1600	3350	3350	G	2500	170	80	46	−10 to +60
PD24G2V	030656	Ball	24	12-28	18-28	16	670	1500	1500	G	2500	170	80	46	−10 to +60
PD48G2V	030657	Ball	48	24-56	42-56	15	310	820	820	G	2500	170	80	46	−10 to +60
PD12F2V	030658	Ball	12	6-14	8-14	14	1200	3200	3200	F	1950	135	64	43	−10 to +60
PD24F2V	030659	Ball	24	12-28	14-28	12	500	1200	1200	F	1950	135	64	43	−10 to +60
PD48F2V	030660	Ball	48	24-56	26-56	11	230	810	810	F	1950	135	64	43	−10 to +60

All figures are nominal, free delivery values at sea level.
All specifications subject to change without notice.

† 3' (0.91M) from fan

ThermaPro-V™

BISCUIT® DC

FEATURES

- ☐ Thermal Speed Control—change airflow as a function of temperature
- ☐ Programmability—change airflow via programming resistors, pulse width modulation
- ☐ Voltage Regulation—internal voltage regulating circuit integral to the fan
- ☐ Automatic restart capability
- ☐ Current limited
- ☐ Size - 4.75″ square x 1.22″ deep (120.7 mm x 31.0 mm)
- ☐ 18 to 28 CFM (8.5 to 13.2 L/Sec.)
- ☐ Weight - 10 oz. (.28 Kg)
- ☐ UL Yellow Card Recognized—File No. E31293
- ☐ CSA Certified—File No. LR52898
- ☐ TUV Approved to IEC 950, VDE 0730, License R97229

THERMAL SPEED CONTROL

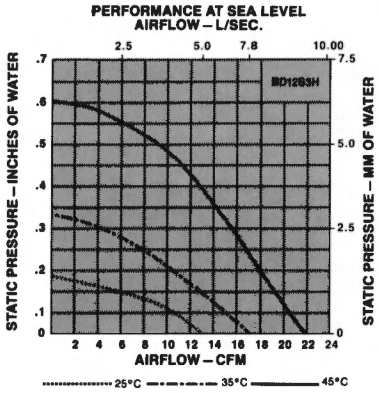

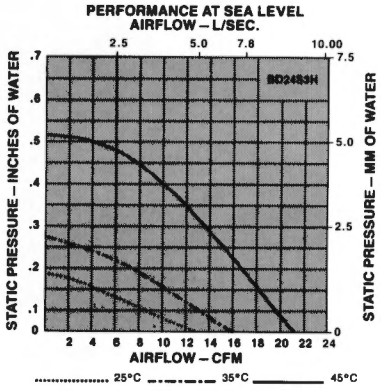

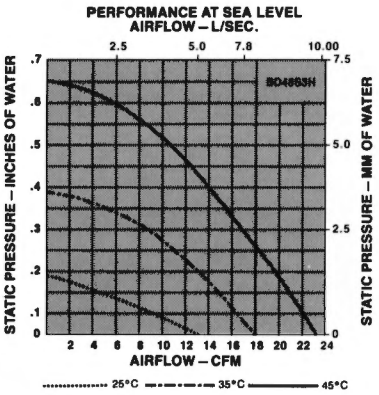

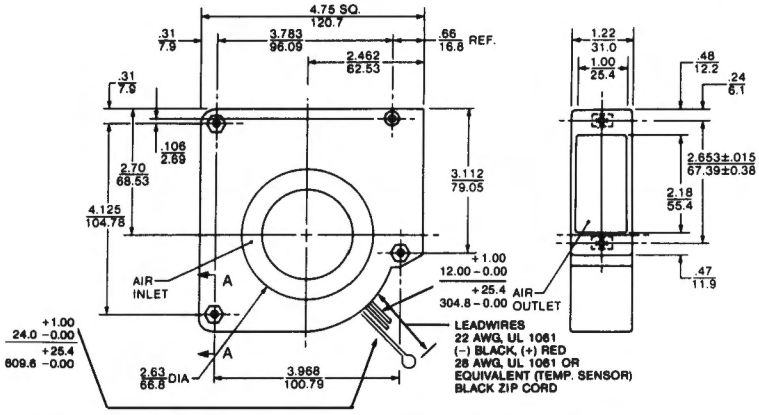

SPECIFICATIONS

Model No	Part No	Bearing	Voltage Nominal	Voltage Range	Ambient Temp. °C	Regulated Voltage Range	Watts	Running Current mA	Locked Rotor mA	Inrush Current mA	RPM	CFM	L/S	Sound Pressure Level† dBA	Operating Temp. Range °C
					45	N/A	7.8	650	1050	1050	2650	22	10.4	44.3	– 10 to + 70
* BD12S3H	030960	Ball	12	6-14	35	9-14	5.1	430	890	890	2050	17	8.0	39.6	– 10 to + 70
					25	7-14	3.3	280	630	630	1650	13	6.1	33.2	– 10 to + 70
					45	20-28	6.3	260	440	440	2450	21	9.9	43.2	– 10 to + 70
* BD24S3H	030961	Ball	24	12-28	35	14-28	4.3	180	380	380	1925	16	7.6	38.7	– 10 to + 70
					25	12-28	3.4	145	320	320	1650	13	6.1	33.2	– 10 to + 70
					45	45-56	8.9	185	210	210	2800	23	10.9	45.9	– 10 to + 70
* BD48S3H	030962	Ball	48	24-56	35	30-56	6.1	130	190	190	2200	18	8.5	40.8	– 10 to + 70
					25	20-56	4.1	85	160	160	1650	13	6.1	33.2	– 10 to + 70

All figures are nominal, free delivery values at sea level. All specifications subject to change without notice. † 3′ (0.91M) from fan

* Distributor Item.

PROGRAMMABILITY

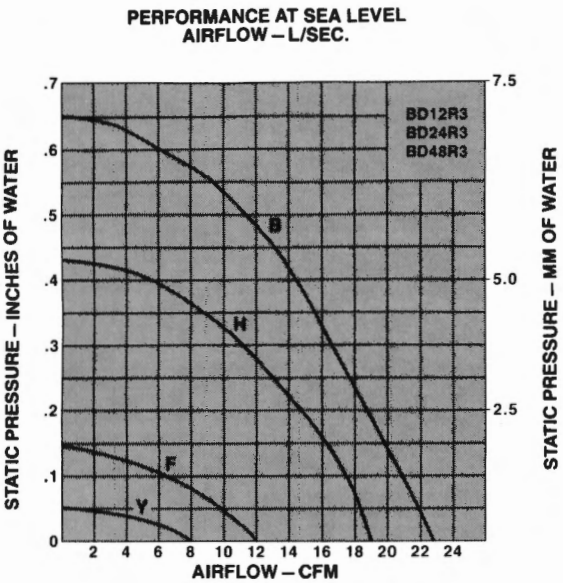

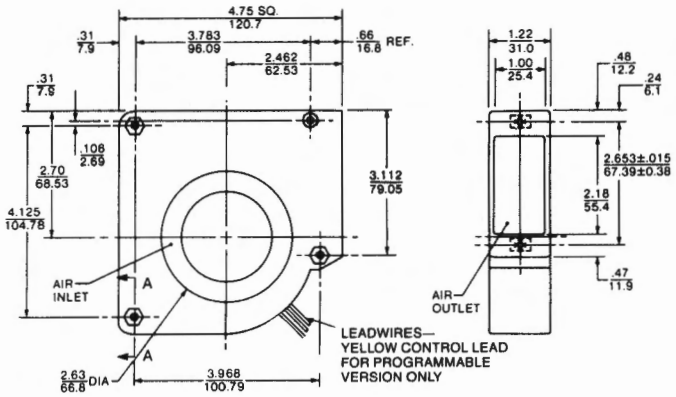

SPECIFICATIONS

Model No	Part No	Bearing	Voltage Nominal	Voltage Range	Programming Method R(KΩ)	Programming Method PWM**	Regulated Voltage Range	Watts	Running Current mA	Locked Rotor mA	Inrush Current mA	Code (see above curves)	RPM	CFM	L/S	Sound Pressure Level† dBA	Operating Temp. Range °C
					∞	100%	N/A	7.7	640	1070	1070	B	2800	23	10.9	45.9	−10 to +70
					3.3	85%	10-14	6.3	520	1000	1000	H	2300	19	9.0	42.6	−10 to +70
BD12R3	030963	Ball	12	6-14	1.0	60%	7-14	3.1	260	600	600	F	1500	12	5.7	30.7	−10 to +70
					0	N/A	6-14	2.0	170	400	400	Y	1100	8	6.1	*	−10 to +70
					∞	100%	N/A	8.3	350	530	530	B	2800	23	10.9	45.9	−10 to +70
					12.0	85%	18-28	5.5	230	420	420	H	2300	19	9.0	42.6	−10 to +70
BD24R3	030964	Ball	24	12-28	1.2	60%	13-28	2.9	120	290	290	F	1500	12	5.7	30.7	−10 to +70
					0	N/A	12-28	2.6	110	240	240	Y	1100	8	6.1	*	−10 to +70
					∞	100%	N/A	9.1	190	210	210	B	2800	22	10.9	45.9	−10 to +70
					15.5	85%	32-56	6.3	130	200	200	H	2300	19	9.0	42.6	−10 to +70
BD48R3	030965	Ball	48	24-56	5.3	60%	24-56	3.6	75	140	140	F	1500	12	5.7	30.7	−10 to +70
					0	N/A	24-56	2.3	50	90	90	Y	1100	8	6.1	*	−10 to +70

All figures are nominal, free delivery values at sea level.
All specifications subject to change without notice.

†3' (0.91M) from fan
*Data below background
**Pulse width modulated signal percentage on time at 20 kHz.

VOLTAGE REGULATION SPECIFICATIONS

Model No	Part No	Bearing	Voltage Nominal	Voltage Range	Regulated Voltage Range	Watts	Running Current mA	Locked Rotor mA	Inrush Current mA	Code (see above curves)	RPM	CFM	L/S	Sound Pressure Level† dBA	Operating Temp. Range °C
BD12B3V	030966	Ball	12	6-14	12-14	7.7	640	1070	1070	B	2800	23	10.9	45.9	−10 to +70
BD24B3V	030967	Ball	24	12-28	24-28	8.3	350	530	530	B	2800	23	10.9	45.9	−10 to +70
BD48B3V	030968	Ball	48	24-56	48-56	9.1	190	210	210	B	2800	23	10.9	45.9	−10 to +70
BD12H3V	030969	Ball	12	6-14	10-14	6.3	520	1000	1000	H	2300	19	9.0	42.6	−10 to +70
BD24H3V	030970	Ball	24	12-28	18-28	5.5	230	420	420	H	2300	19	9.0	42.6	−10 to +70
BD48H3V	030971	Ball	48	24-56	32-56	6.3	130	200	200	H	2300	19	9.0	42.6	−10 to +70
BD12F3V	030972	Ball	12	6-12	7-14	3.1	260	600	600	F	1500	12	5.7	30.7	−10 to +70
BD24F3V	030973	Ball	24	12-28	13-28	2.9	120	290	290	F	1500	12	5.7	30.7	−10 to +70
BD48F3V	030974	Ball	48	24-56	24-56	3.6	75	140	140	F	1500	12	5.7	30.7	−10 to +70

All figures are nominal, free delivery values at sea level.
All specifications subject to change without notice.

† 3' (0.91M) from fan

ThermaPro-V™

SPINNAKER™ DC

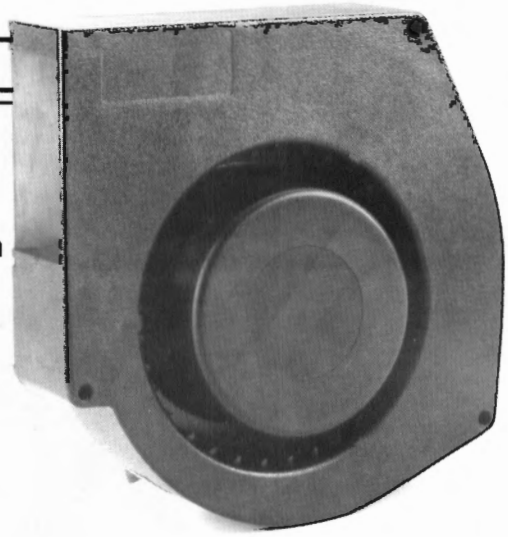

FEATURES

- ☐ Thermal Speed Control-change airflow as a function of temperature
- ☐ Programmability—change airflow via programming resistors, pulse width modulation
- ☐ Voltage Regulation—internal voltage regulating circuit integral to the fan
- ☐ Automatic restart capability
- ☐ Current limited
- ☐ Size - 6.37″ square x 1.60″ deep (161.8 mm x 40.6 mm)
- ☐ 29 to 72 CFM (14 to 34 L/Sec.)
- ☐ Weight - 2.1 lbs. (.953 Kg)
- ☐ UL Yellow Card Recognized—File No. E31293
- ☐ CSA Certified—File No. LR52898
- ☐ TUV approved to IEC 950, VDE 0730, Licenses R97152 and R97188

THERMAL SPEED CONTROL

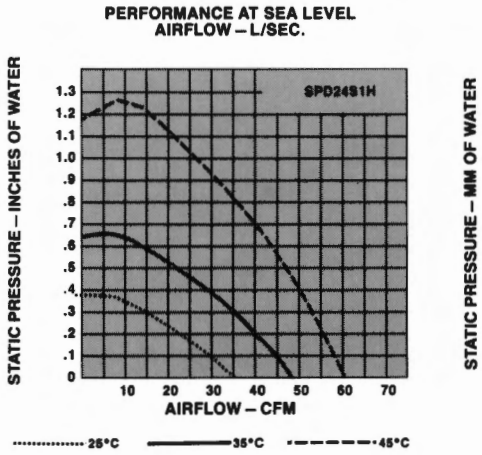

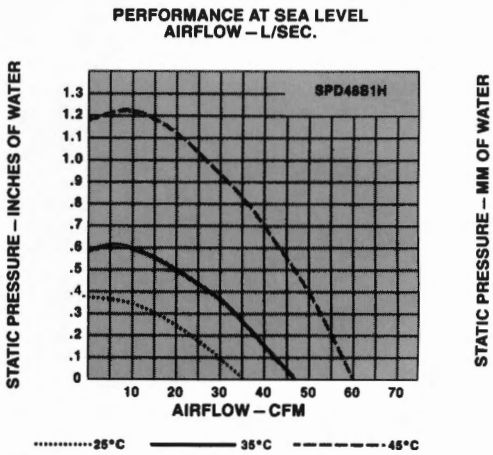

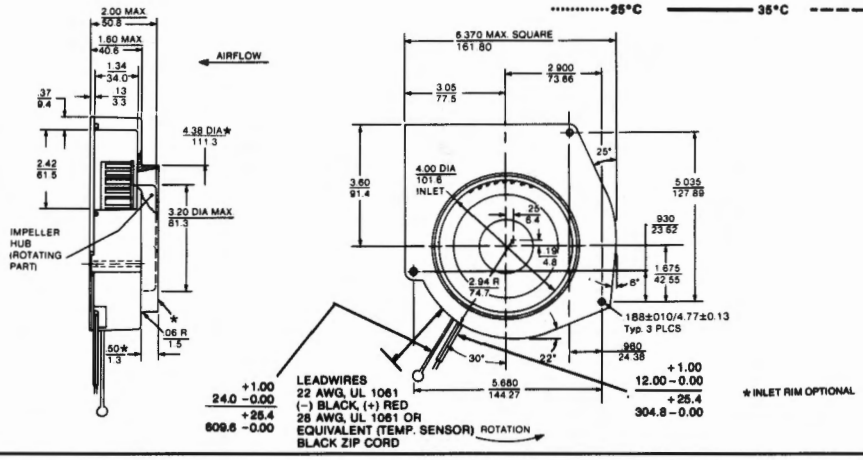

SPECIFICATIONS

Model No	Part No	Bearing	Voltage Nominal	Voltage Range	Ambient Temp. °C	Regulated Voltage Range	Watts	Running Current mA	Locked Rotor mA	Inrush Current mA	RPM	CFM	L/S	Sound Pressure Level† dBA	Operating Temp. Range °C
SPD24S1H	030929	Ball	24	12-28	45	N/A	24	1000	1700	1700	2500	60	28.3	56.0	– 10 to + 70
					35	18-28	17	710	1690	1690	2000	48	22.7	51.1	– 10 to + 70
					25	14-28	13	520	1625	1625	1600	35	16.5	45.3	– 10 to + 70
SPD48S1H	030930	Ball	48	24-56	45	46-56	22	450	840	840	2500	60	28.3	56.0	– 10 to + 70
					35	32-56	15	320	820	820	1925	46	21.7	50.2	– 10 to + 70
					25	24-56	12	240	790	790	1600	35	16.5	45.3	– 10 to + 70

All figures are nominal, free delivery values at sea level.
All specifications subject to change without notice.

† 3′ (0.91M) from fan

PROGRAMMABILITY

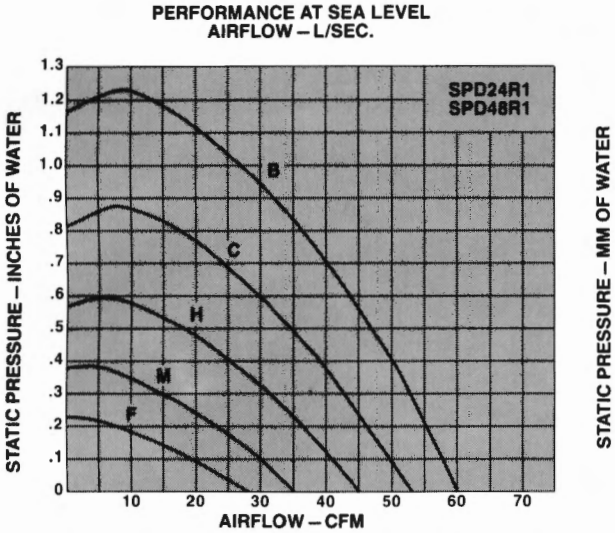

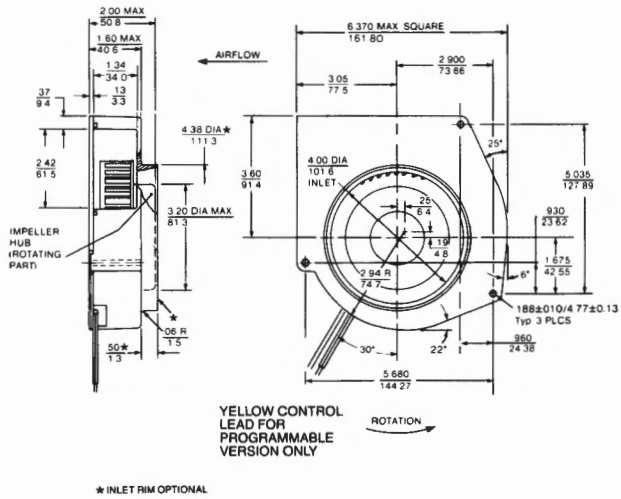

SPECIFICATIONS

Model No	Part No	Bearing	Voltage Nominal	Voltage Range	Programming Method R(KΩ)	Programming Method PWM**	Regulated Voltage Range	Watts	Running Current mA	Locked Rotor mA	Inrush Current mA	Code (see above curves)	RPM	CFM	L/S	Sound Pressure Level† dBA	Operating Temp. Range°C
					∞	100%	N/A	23	950	1700	1700	B	2500	60	28.3	56.0	– 10 to + 70
					8.2	85%	20-28	20	830	1670	1670	C	2200	53	25.0	52.2	– 10 to + 60
SPD24R1	030931	Ball	24	12-28	4.8	60%	18-28	15	640	1625	1625	H	1900	45	21.2	48.6	– 10 to + 60
					2.7	10%	15-28	12	520	1600	1600	M	1600	37	17.5	45.3	– 10 to + 60
					0	N/A	11-28	9	380	1250	1250	F	1200	28	13.2	38.8	– 10 to + 60
					∞	100%	N/A	24	490	850	850	B	2500	60	28.3	56.0	– 10 to + 70
					22.5	85%	39-56	19	390	820	820	C	2200	53	25.0	52.2	– 10 to + 60
SPD48R1	030932	Ball	48	24-56	14.0	60%	35-56	16	340	800	800	H	1900	45	21.2	48.6	– 10 to + 60
					7.5	10%	26-56	12	260	775	775	M	1600	37	17.5	45.3	– 10 to + 60
					0	N/A	24-56	9	180	580	580	F	1200	28	13.2	38.8	– 10 to + 60

All figures are nominal, free delivery values at sea level.
All specifications subject to change without notice.

† 3' (0.91M) from fan
**Pulse width modulated signal percentage on time at 20 kHz.

VOLTAGE REGULATION SPECIFICATIONS

Model No	Part No	Bearing	Voltage Nominal	Voltage Range	Regulated Voltage Range	Watts	Running Current mA	Locked Rotor mA	Inrush Current mA	Code (see above curves)	RPM	CFM	L/S	Sound Pressure Level† dBA	Operating Temp. Range °C
SPD24B1V	030933	Ball	24	12-28	24-28	23	950	1700	1700	B	2500	60	28.3	56.0	– 10 to + 60
SPD48B1V	030934	Ball	48	24-56	48-56	24	490	850	850	B	2500	60	28.3	56.0	– 10 to + 60
SPD24C1V	030935	Ball	24	12-28	20-28	23	830	1670	1670	C	2200	53	25.0	52.2	– 10 to + 60
SPD48C1V	030936	Ball	48	24-56	39-56	19	390	820	820	C	2200	53	25.0	52.2	– 10 to + 60
SPD24H1V	030937	Ball	24	12-28	18-28	15	640	1625	1625	H	1900	45	21.2	48.6	– 10 to + 60
SPD48B1V	030938	Ball	48	24-56	33-56	16	340	800	800	H	1900	45	21.2	48.6	– 10 to + 60

All figures are nominal, free delivery values at sea level.
All specifications subject to change without notice.

† 3' (0.91M) from fan

DC Fan Performance Sensor (FPS)

For DC Fans and Blowers

Thermal management of electronic packages is increasingly challenging as package sizes decrease and circuit complexities increase. In order to avoid critical internal temperature increases within the electronic system, it is necessary to make provisions for a continuous supply of cooling airflow by monitoring and remote warning of potential airflow interruption.

Comair Rotron supplies a variety of Fan Performance Sensor-equipped fans which provide both monitoring and remote warning capabilities. Should cooling airflow be reduced or interrupted due to a drop in RPM, these FPS systems allow for backup cooling devices to go on line, or for less critical equipment, for system shutdown in order to avoid excessive internal temperature rise.

LEADWIRE CONFIGURATION

Isolated	5 Leads	(+) Fan Power	Red
		(−) Fan Ground	Black
		(+) FPS Power	Red w/White Tracer
		(−) FPS Ground	Black w/White Tracer
		(Sensor) FPS Sensor	Blue w/White Tracer
Non-Isolated	3 Leads	(+) Fan Power	Red
		(−) Fan Ground	Black
		(Sensor) FPS Sensor	Blue w/White Tracer

NOTE: Terminals may replace the (+) (−) fan power leadwires.

ISOLATED OR NON-ISOLATED

In addition to the options listed below, the Fan Performance Sensor is offered with either isolated or non-isolated circuitry. The isolated FPS has three leads (+), (−) and (output), in addition to the two power leads or terminals for the motor circuit, and is therefore electrically isolated from the motor circuit. The non-isolated FPS has only the (output) lead in addition to the motor connections. The (+) and (−) that power the sensor circuit are derived internally from the motor circuit. Each output is designed around a Hall Device, which generates a square-wave output. This output signal is then conditioned internally by additional electronic circuitry to yield a discrete pass or fail signal.

TYPICAL FPS APPLICATION EXAMPLE

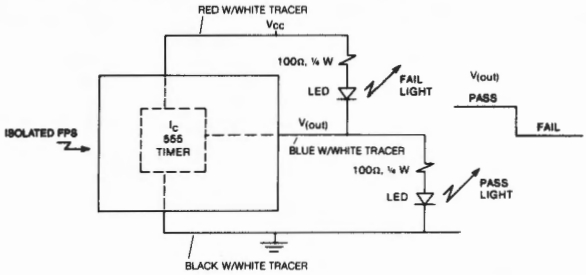

NOMENCLATURE FOR THE FPS

EXAMPLE: **PD48B2 Q D N**

- **OUTPUT** — Q
- **DELAY FEATURES** — D
- **LATCH FEATURES** — N

FPS is denoted by a 3-letter suffix.

Go/No-Go is denoted by a 1-letter suffix.

OUTPUT

Q = Open Collector—The signal is derived from the collector of the output transistor. The output is high on pass, low on fail, and is set to trip at a certain RPM level. Downstream electronics can be tied between the supply voltage (V_{cc}) and output only.

N = Inverted Open Collector—The signal is derived from the collector of the output transistor. The output is low on pass, high on fail, and is set to trip at a certain RPM level. Downstream electronics can be tied between the supply voltage (V_{cc}) and output only.

B = Bipolar—The signal is generated from a 555 Timer. The output signal is high on pass, low on fail, and is set to trip at a certain RPM level. Downstream electronics (e.g. LEDs) can be tied between output and supply voltage (V_{cc}) and/or output and ground.

T = TTL Compatible—This is the same as an open collector output, but has an internal pull-up resistor tied between the supply voltage (V_{cc}) and the collector of the output transistor. The output signal is high on pass (logical 1) and low on failure (logical 0), and is set to trip at a certain RPM level. Downstream electronics can be tied between the supply voltage (V_{cc}) and/or output and ground.

R = Inverted TTL Compatible—This is the same as an open collector output, but has an internal pull-up resistor tied between the supply voltage (V_{cc}) and the collector of the output transistor. The output signal is low on pass (logical 0) and high on failure (logical 1) and is set to trip at a certain RPM level. Downstream electronics can be tied between the supply voltage (V_{cc}) and/or output and ground.

G = Go-NoGo — The signal is derived from the collector of the output transistor. The output is low on pass, high on fail and will signal a failure caused by a seized or obstructed rotor that has stopped rotating. (No latch or delay available.)

DELAY FEATURES

D = 10±4 second delay -- The failure signal is delayed approximately 10 seconds, thereby eliminating temporary or nuisance failure indication such as at fan start up.

N = < 1 second delay

LATCH FEATURES

L = Latched -- Once the sensor outputs a failure signal, that signal is latched on even if the fan goes back into a pass condition. The latch is reset by interrupting the power to the FPS and the output load.

N = No Latch.

CIRCUIT OPERATION

The circuit (previous page) utilizes the bipolar signal output option with delay feature (10 +– 4 seconds) and latch feature. The output signal is used to power two LEDs: one labelled to indicate proper operation of the cooling fan and one labelled to indicate failure. Failure indication is determined as the fan rotational speed falls below the nominal 1900 RPM for less than 10 seconds. Rotational speed less than nominal value may be caused by a reduced applied voltage to the fan, a physical obstruction impeding fan rotation, or failure of the motor or bearing.

Should the fan then speed up above minimum speed, the failure indicator would remain on. The latch feature maintains the failure indication until a system operator resets the FPS. The FPS is reset by interrupting the FPS supply voltage and output load for more than 40 milliseconds.

An advantage of this FPS design is the continual fan status indication. Because of the latch feature chosen in this example, the user need not constantly monitor the pass/fail LED indicators in order to determine if a failure has occurred.

The delay feature specified in this example will not allow a failure indiction on start-up unless the fan fails to reach the specified minimum nominal rotational speed (1900 RPM) within ten seconds. If the delay option had not been specified, the failure indicator would have been lit until the fan reached minimum speed. The pass indicator will be lit during normal operation.

SPECIFICATIONS

			MAJOR DC, PATRIOT DC, SPINNAKER DC, GALAXY DC				MUFFIN XL DC, WHISPER XL DC, SPRITE DC, VIKING DC				WHIFFET DC SPRINT DC MUFFIN DC BISCUIT DC
Parameter	**Conditions**		**Bipolar Output B**	**Open Collector Q**	**TTL Output T**	**Inverted Open Collector N**	**Open Collector Q**	**TTL Output T**	**Inverted Open Collector N**	**Go/ No-Go G**	**Go/ No-Go G**
Voltage Requirement*			5–15Vdc				5–15Vdc			N/A	N/A
Supply Current (Quiescent)	V_{cc} = 5Vdc		15mA MAX				15mA MAX			N/A	N/A
	V_{cc} = 15Vdc		30mA MAX				30mA MAX			N/A	N/A
Inrush Current	V_{cc} = 5Vdc		50mA mAX				50mA MAX			N/A	N/A
Temperature	Non-Operating (Storage)		–28°C TO +70°C				–28°C TO +70°C				–28°C TO +70°C
	Operating		0°C TO +70°C				0°C TO +70°C				0°C TO +70°C
Alarm Signal	No Delay		< 1SEC				< 1SEC				N/A
	Delay		10 ± 4SEC				10 ± 4SEC			N/A	N/A
Alarm-Set Point**	V_{cc} = 5Vdc		1900 ± 300RPM				1900 ± 300RPM			N/A	N/A
Low-Level Output Voltage	V_{cc} = 15 Vdc	IOL = 10mA	.25V MAX	N/A			N/A				N/A
		IOL = 100mA	2.75V MAX								
	V_{cc} = 5vdc	IOL = 5mA	.35V MAX	N/A			N/A				N/A
		IOL = 8mA	.5V MAX								
Hi-Level Output Voltage	V_{cc} = 15Vdc	IOH = 100mA	12.75VMIN	N/A			N/A				N/A
	V_{cc} = 5Vdc	IOH = 100mA	2.75V MIN								
V_c Collector-Emitter	MAX		N/A	28Vdc	N/A		30Vdc	N/A	30Vdc	28Vdc	28Vdc
I_c Continuous Collector Current	MAX		N/A	100mA	N/A		16mA	N/A	16mA	100mA	100mA
V_{ce} (SAT) Collector-Emitter SAT Voltage	I_C = 10mA I_C = 100mA		N/A	100mV(TYP) 200mV(TYP)	N/A		N/A	N/A	N/A	100mV(TYP) 200mV(TYP)	100mV(TYP) 200mV(TYP)
	I_C = 4mA		N/A	N/A	N/A		250mV(TYP)	N/A	250mV(TYP)	N/A	N/A

* Isolated versions (other input voltages available)
** Other trip points available
N/A Not Applicable

DC FPS	Sensor Circuit Isolation		Output					
Model	Isolated	Non-Isolated	Open Collector	Inverted Open Collector	Bipolar	T.T.L. Compatible (5V Amplitude)	Inverted TTL Compatible (5V Amplitude)	Go/No-Go
Letter Designation	–	–	Q	N	B	T	R	G
Sprint DC	N/A	S	N/A	N/A	N/A	N/A	N/A	O
Sprite DC	S	O	O	O	O	O	O	O
Muffin DC	N/A	S	N/A	N/A	N/A	N/A	N/A	O
Whisper XL-DC	S	O	O	O	O	O	O	O
Muffin XL-DC	S	O	O	O	O	O	O	O
Major DC	S	O	O	O	O	O	O	N/A
Patriot DC	S	O	O	O	O	O	O	N/A
Biscuit DC	N/A	S	N/A	N/A	N/A	N/A	N/A	O
Spinnaker DC	S	O	O	O	O	O	O	N/A
Viking DC	S	O	O	O	O	O	O	O
Whiffet DC	N/A	S	N/A	N/A	N/A	N/A	N/A	N/A
Galaxy DC	N/A	S	N/A	N/A	N/A	N/A	N/A	N/A

S = Standard O = Optional N/A = Not Available

Tachometer Output Option

For Speed And Fan Failure Sensing In DC Fans And Blowers

Brushless DC airmovers use a commutating sensing circuit for motor operation. An additional Hall Device may be added to the PC board from which digital pulses can be derived and supplied to the design engineer via a third lead referenced to ground. This will allow direct pulse to speed relationships to be derived. These digital pulses can then be conditioned to provide alarms for fan failures such as lights, buzzers, etc.

ISOLATED OR NON-ISOLATED

The standard tachometer output is offered with non-isolated circuitry. The non-isolated tachometer output fan has three leadwires. The power for the tachometer circuit is derived internally from the motor circuit. (See Diagram #1) The isolated tachometer output fan has 5 leadwires. The tachometer circuit is powered separately and therefore isolated from the motor circuit. (See Diagram #2)

Each output is designed around a Hall Device which generates a square-wave output. This output signal must then be conditioned externally by the customer's electronic circuitry to yield a discrete pass or fail signal. The non-isolated tachometer output must be used with the same ground reference as the fan.

NON-ISOLATED TACHOMETER OUTPUT

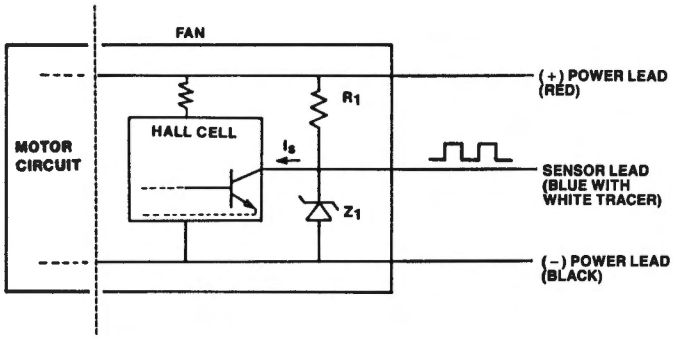

ISOLATED TACHOMETER OUTPUT

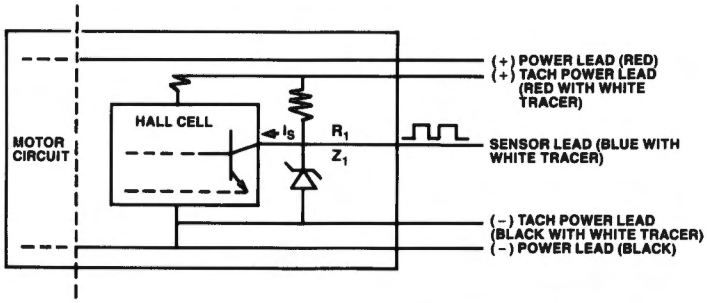

I_S = The sink capability of the collector of the hall cell = 15 mA maximum. R_1 and Z_1 are added to Tachometer Output fans to produce a fixed amplitude of V_{OUT}.

NOTE: 5V tach out ⇒ R_1 = 10K
Open Collector ⇒ Omit R_1 and Z_1

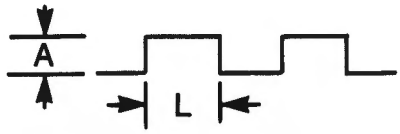

Tachometer Output Waveshape

A = Amplitude of Tachometer Output. Fixed amplitude of Tachometer Output, available at any voltage up to input voltage for fan. Contact Comair Rotron Application Engineering Department.

$$L\,[ms] = \left(\frac{60{,}000\ ms}{RPM\ of\ fan}\right) \Big/ 2x(Pulses\ per\ Revolution)$$

DC TACHOMETER OUTPUT

Model	Sensor Circuit Isolation: Isolated	Sensor Circuit Isolation: Non-Isolated	Output: Open Collector	Output: T.T.L. Compatible (5V Amplitude)	Output: Fixed Voltage	Output: Pulses Per Revolution
Sprint DC	N/A	S	O	S	O	2
Sprite DC	O	S	O	S	O	1
Muffin DC	N/A	S	O	S	O	2
Whisper XL-DC	O	S	O	S	O	1
Muffin XL-DC	O	S	O	S	O	1
Major DC	O	S	O	S	O	2
Patriot DC	O	S	O	S	O	2
Biscuit DC	N/A	S	O	S	O	2
Spinnaker DC	O	S	O	S	O	2
Flight II DC	N/A	S	O	S	O	2
Viking DC	O	S	O	S	O	1
Galaxy DC	N/A	S	O	S	O	2
Whiffet DC	N/A	S	O	S	O	2

S = Standard O = Optional N/A = Not Available

Caution:

On all Tachometer models, the output wire must not be applied to either + or – power leads.

ADJUSTABLE RPM TRIP POINT CIRCUIT

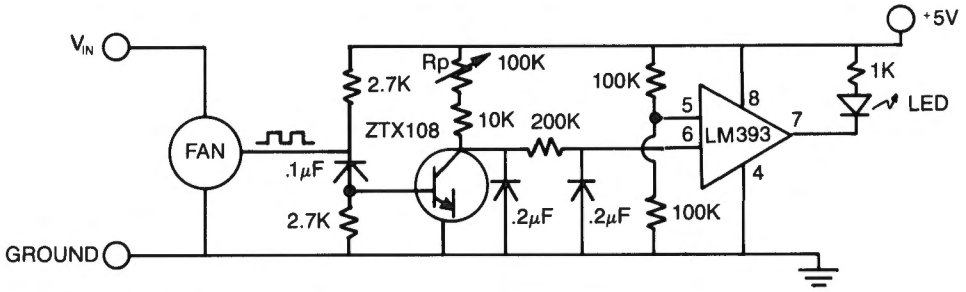

Figure 1

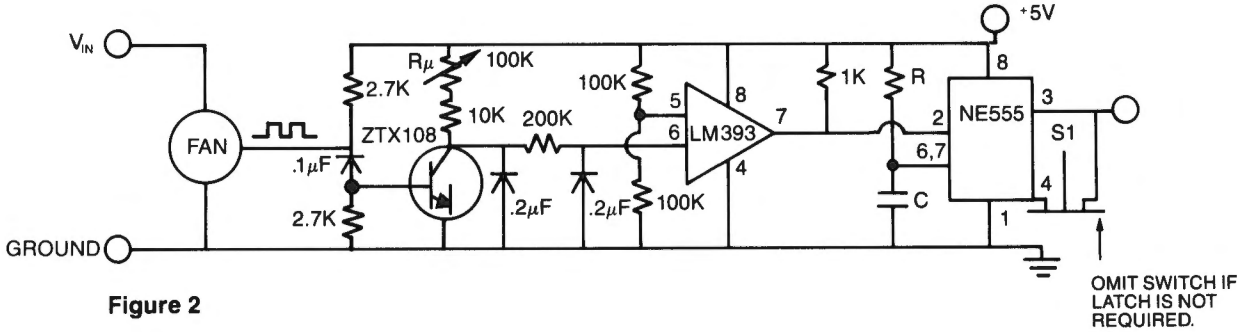

Figure 2

NOTE: R and C must be selected to determine the length of the delay

Figure 1 suggests one method that may be incorporated to set a pass/fail trip point relating to a specific speed, the low level digital pulses from the fan are coupled to the speed sensing circuitry. The trip point is adjustable from approximately 800 RPM to 2500 RPM by adjusting Rp. This configuration provides a low level TTL signal on pass and a high lvel signal on fail. If higher level signals are necessary for interfacing, a driver circuit may be added to this configuration. (See Figure 2.)

Capability

AC Fans and Blowers

One of the industry's widest selections of both small and large AC fans is available from Comair Rotron. From 3.14″ square to 10.00″ diameter and from 20 CFM to 550 CFM, Comair Rotron has a product for every airmoving requirement.

New are the Hi-Rel Major® and Patriot® AC fans. These fans offer 10% cooler bearing temperature and provide as much as five years longer life for continuous duty operation.

High reliability, precisely engineered, the Hi-Rel fans continue the tradition of providing quality designed products at a competitive price structure.

Comair Rotron, through 40 years of testing and research, offers both lightweight metals and high strength venturis as well as the quietest and most reliable sleeve bearing system available. Computer designed fan blades such as the patented Feathered Edge design reduce noise levels and increase efficiency.

Special design orders and modifications of our standard product line are available. For use of Comair Rotron's state-of-the-art testing facilities please consult the factory or call your Comair Rotron representative for additional information.

SPRITE® AC

TUBEAXIAL FAN

FEATURES

- ☐ Size - 3.14″ square x 1.645″ deep (79.8 mm x 41.8 mm)
- ☐ 20 to 34 CFM (9.5 to 16.0 L/Sec.)
- ☐ 115 VAC or 220/230 VAC, 1 phase, 50/60 Hz
- ☐ Low noise level
- ☐ Operating temperature range: −28°C to +70°C
- ☐ Weight - 18 oz. (.51 Kg)
- ☐ UL Yellow Card Recognized - File No. E31293 - all models
- ☐ CSA Certified - File No. LR52898 - all models
- ☐ VDE Marks License No. 1126 - all models

PERFORMANCE

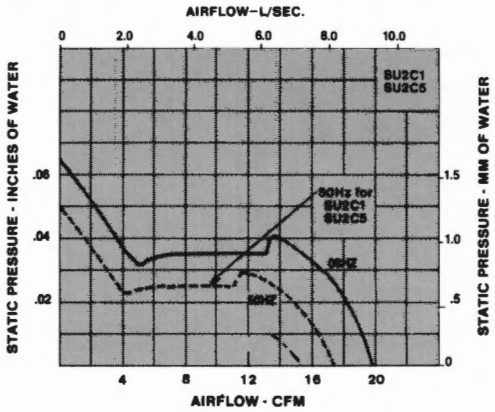

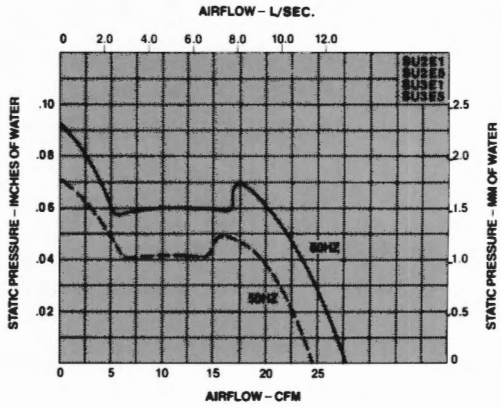

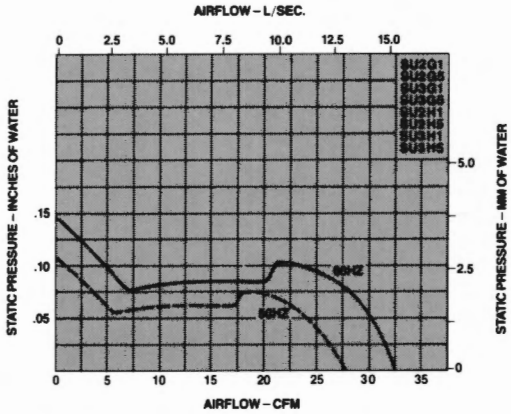

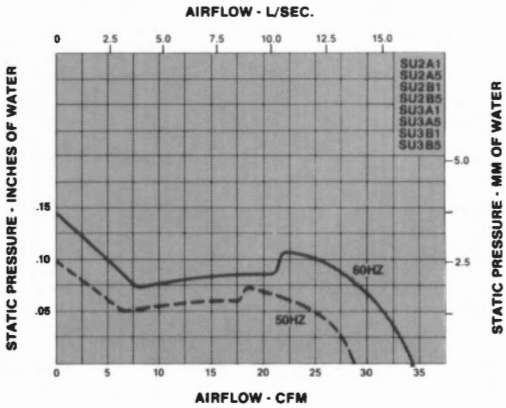

SPECIFICATIONS

LEADWIRES		TERMINALS										
Model No.	Part No.	Model No.	Part No.	Bearing	Volts	Hz	Watts	Line Amps	Locked Rotor Amps	RPM	CFM	L/Sec.
*SU2C1	028270	*SU2C5	028281	Sleeve	115	50/60	7/6	.07/.06	.08/.07	1750/1900	17/20	8.0/9.5
*SU2E1	028275	*SU2E5	028282	Sleeve	115	50/60	7/6	.08/.07	.09/.08	2200/2600	23/27	10.7/12.7
SU3E1	028276	SU3E5	028283	Sleeve	220/230	50/60	11/10	.07/.06	.08/.07	2200/2600	23/27	10.7/12.7
SU2G1	028278	SU2G5	028406	Sleeve	115	50/60	10/9	.11/.10	.14/.13	2700/3150	27/32	12.7/15.1
SU2H1	028379	SU2H5	030426	Ball	115	50/60	10/9	.11/.10	.14/.13	2700/3150	27/32	12.7/15.1
SU3G1	028872	SU3G5	028424	Sleeve	220/230	50/60	10/9	.07/.06	.08/.08	2700/3150	27/32	12.7/15.1
SU3H1	030425	SU3H5	030427	Ball	220/230	50/60	10/9	.07/.06	.08/.08	2700/3150	27/32	12.7/15.1
*SU2A1	028267	*SU2A5	028279	Sleeve	115	50/60	13/11	.19/.15	.23/.21	2750/3250	28/34	13.2/16.0
*SU2B1	028268	*SU2B5	028410	Ball	115	50/60	13/11	.19/.15	.23/.21	2750/3250	28/34	13.2/16.0
*SU3A1	028269	*SU3A5	028280	Sleeve	220/230	50/60	14/13	.09/.08	.11/.10	2750/3250	28/34	13.2/16.0
*SU3B1	028331	*SU3B5	028460	Ball	220/230	50/60	14/13	.09/.08	.11/.10	2750/3250	28/34	13.2/16.0

* Distributor Item.

All figures are nominal free delivery values at sea level.

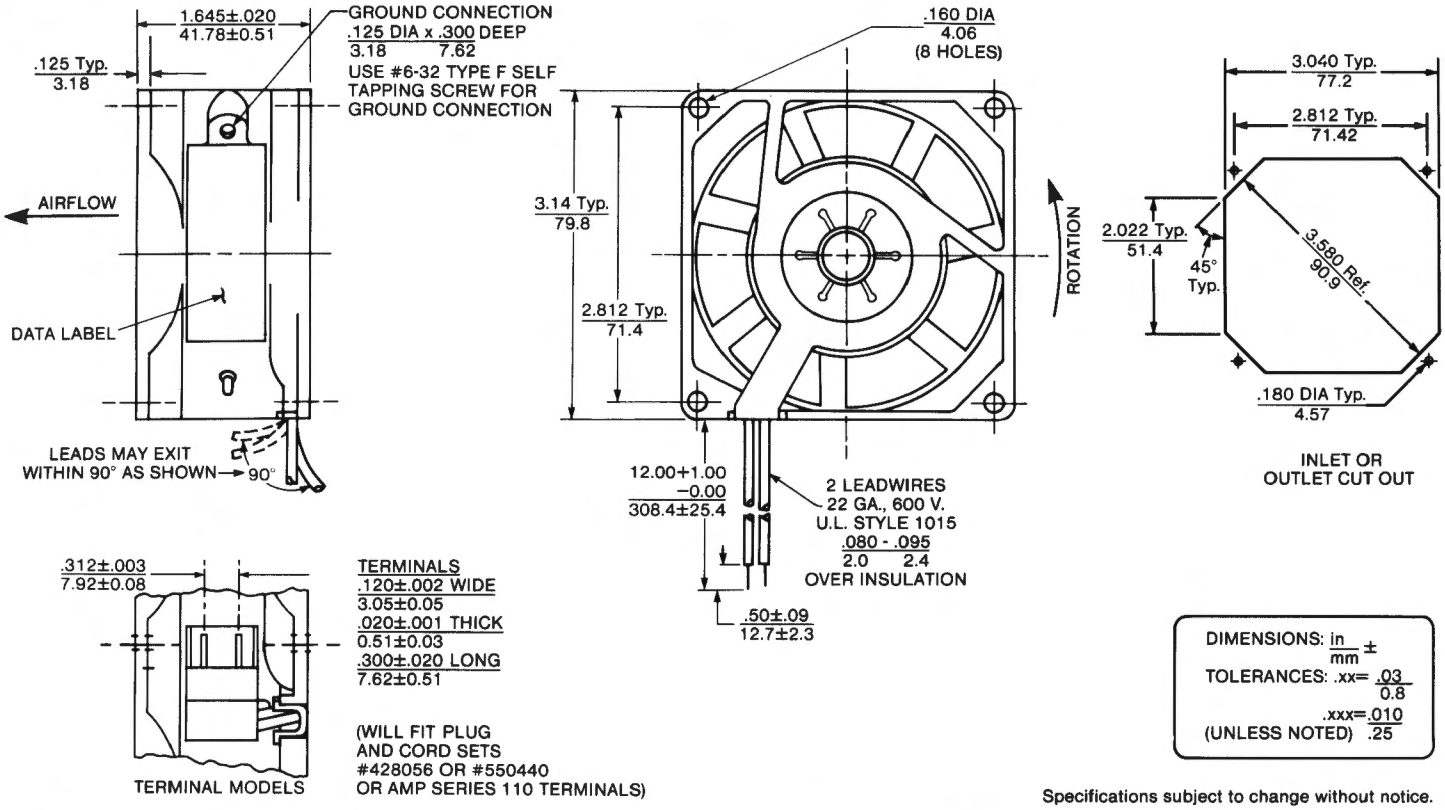

Specifications subject to change without notice.

MOTOR

Two-pole shaded pole induction motor.
Insulation IEEE Class 130.
Sintered bronze sleeve or stainless steel ball bearings.
Impedance protected.
100% dielectric tested at 1800 VAC/1 sec./500 microamps maximum leakage.

CONSTRUCTION

Venturi and Spider - zinc alloy, painted black.
Propeller - flame retardant black polypropylene.

LIFE EXPECTANCY

The curve represents the continuous duty life of Sprite fans at a given temperature, after which 90% of the units will still be operating.

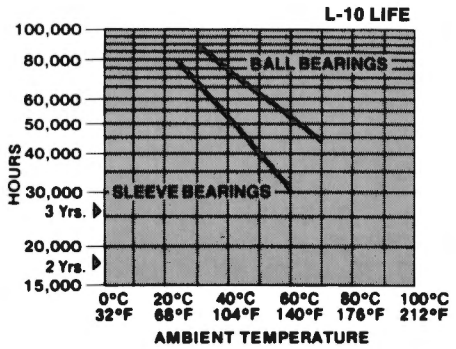

Example: When run in 40°C ambient, 90% of sleeve bearing units will still be running after 55,000 hours continuous duty.

ACOUSTIC RATINGS (for definitions see page 5)

Models	HZ	AIR FLOW CFM	AIR FLOW L/Sec	STATIC PRESSURE "w.g.	STATIC PRESSURE mm H_2O	PER INCE ANSI S12.11-1987 PSIL dB	PER INCE ANSI S12.11-1987 SPL dBA @ 3'	PER INCE ANSI S12.11-1987 NEPL Bels 'A'	FREELY SUSPENDED @ 1 METER dBA
SU2C1 SU2C5	50	17	8.0	0	0	20.7	30.8	4.08	25.9
		15.5	7.3	0.02	0.51	21.5	28.5	3.85	
	60	20	9.4	0	0	23.0	32.8	4.28	26.2
		15.5	7.3	0.03	0.78	21.3	29.6	3.96	
SU2E1 SU2E5	50	23	10.9	0	0	26.4	35.1	4.51	28.3
		20.9	9.9	0.025	0.64	23.9	31.9	4.19	
SU3E1 SU3E5	60	27	12.7	0	0	28.6	36.8	4.68	30.8
		23	10.9	0.036	0.91	26.7	33.8	4.38	
SU2G1 SU2G5	50	27	12.7	0	0	31.2	38.4	4.84	33.7
		24.8	11.7	0.04	1.02	29.0	36.1	4.61	
SU3G1 SU3G5	60	32	15.1	0	0	38.7	45.2	5.52	38.6
		30	14.2	0.05	1.27	36.0	42.3	5.23	
SU2H1 SU2H5	50	27	12.7	0	0	32.5	38.6	4.86	34.2
		26	12.3	0.045	1.14	30.3	37.0	4.70	
SU3H1 SU3H5	60	32	15.1	0	0	39.2	44.9	5.49	40.1
		30.2	14.3	0.06	1.52	36.8	42.6	5.26	
SU2A1 SU2A5	50	28	13.2	0	0	33.0	39.9	4.99	35.5
		21.9	10.3	0.059	1.50	30.8	37.6	4.76	
SU3A1 SU3A5	60	34	16.0	0	0	39.6	45.5	5.55	39.5
		26.1	12.3	0.085	2.16	36.2	42.5	5.25	
SU2B1 SU2B5	50	28	13.2	0	0	33.2	39.9	4.99	35.5
		23.6	11.1	0.05	1.27	30.3	36.9	4.69	
SU3B1 SU3B5	60	34	16.0	0	0	40.8	46.5	5.65	41.0
		29.2	13.8	0.072	1.83	37.3	43.1	5.31	

OPTIONS

Capable of furnishing harness assemblies. See page 106.

SPRITE® AC REVERSE FLOW

TUBEAXIAL FAN

FEATURES

- ☐ Size - 3.14″ square x 1.645″ deep (79.8 mm x 41.8 mm)
- ☐ 20 to 33 CFM (9.5 to 15.8 L/Sec.)
- ☐ 115 VAC or 220/230 VAC, 1 phase, 50/60 Hz
- ☐ Low noise level
- ☐ Operating temperature range: −28°C to +70°C
- ☐ Weight - 18 oz. (.51 Kg)
- ☐ UL Yellow Card Recognized - File No. E31293 - all models
- ☐ CSA Certified - File No. LR52898 - all models
  VDE Marks License No. - 1126 - all models

PERFORMANCE

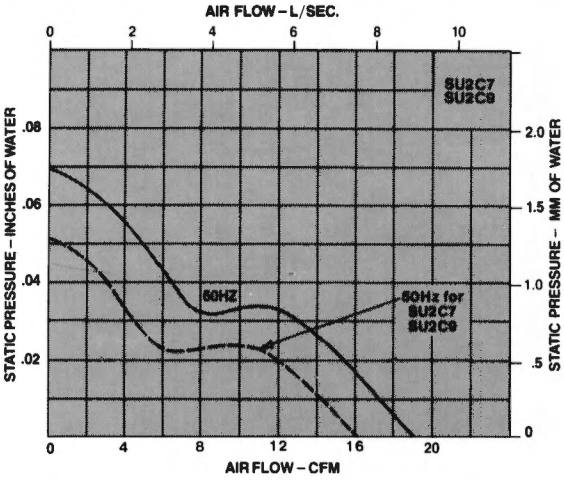

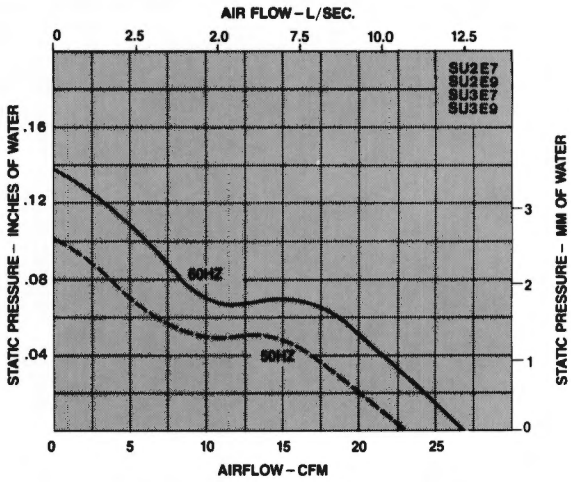

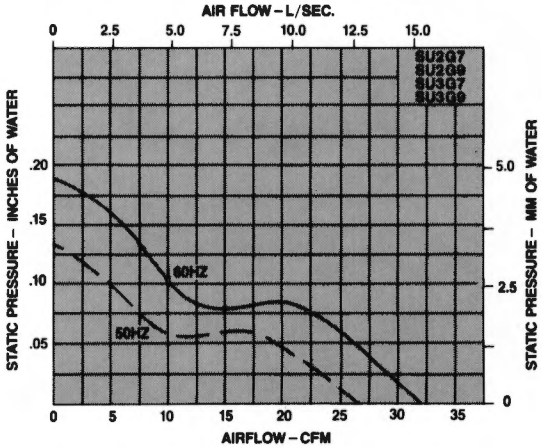

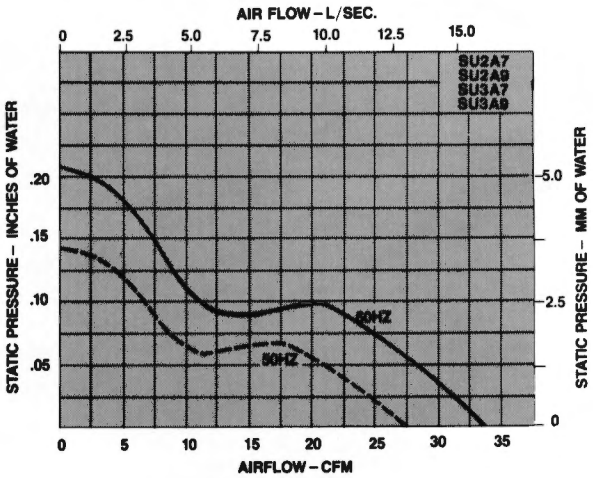

SPECIFICATIONS

LEADWIRES		TERMINALS										
Model No.	Part No.	Model No.	Part No.	Bearing	Volts	Hz	Watts	Line Amps	Locked Rotor Amps	RPM	CFM	L/Sec.
*SU2C7	030270	SU2C9	030395	Sleeve	115	50/60	7/6	.07/.06	.08/.07	1700/1950	15/18	7.1/8.5
SU2E7	030271	SU2E9	030482	Sleeve	115	50/60	7/6	.08/.07	.09/.08	2370/2750	23/27	10.7/12.6
SU3E7	030273	SU3E9	030396	Sleeve	220/230	50/60	11/10	.07/.06	.08/.07	2370/2750	23/27	10.7/12.6
SU2G7	030384	SU2G9	030433	Sleeve	115	50/60	10/9	.11/.10	.14/.12	2700/3150	26/32	12.2/15.1
SU3G7	030385	SU3G9	030485	Sleeve	220/230	50/60	10/9	.07/.06	.08/.07	2700/3150	26/32	12.2/15.1
*SU2A7	030272	SU2A9	030458	Sleeve	115	50/60	13/11	.19/.15	.23/.21	2780/3350	27/33	13.0/15.8
*SU3A7	030274	SU3A9	030481	Sleeve	220/230	50/60	14/13	.09/.08	.11/.10	2780/3350	27/33	13.0/15.8

*Distributor Item.

All figures are nominal free delivery value at sea level.
Contact factory for ball bearing availability.

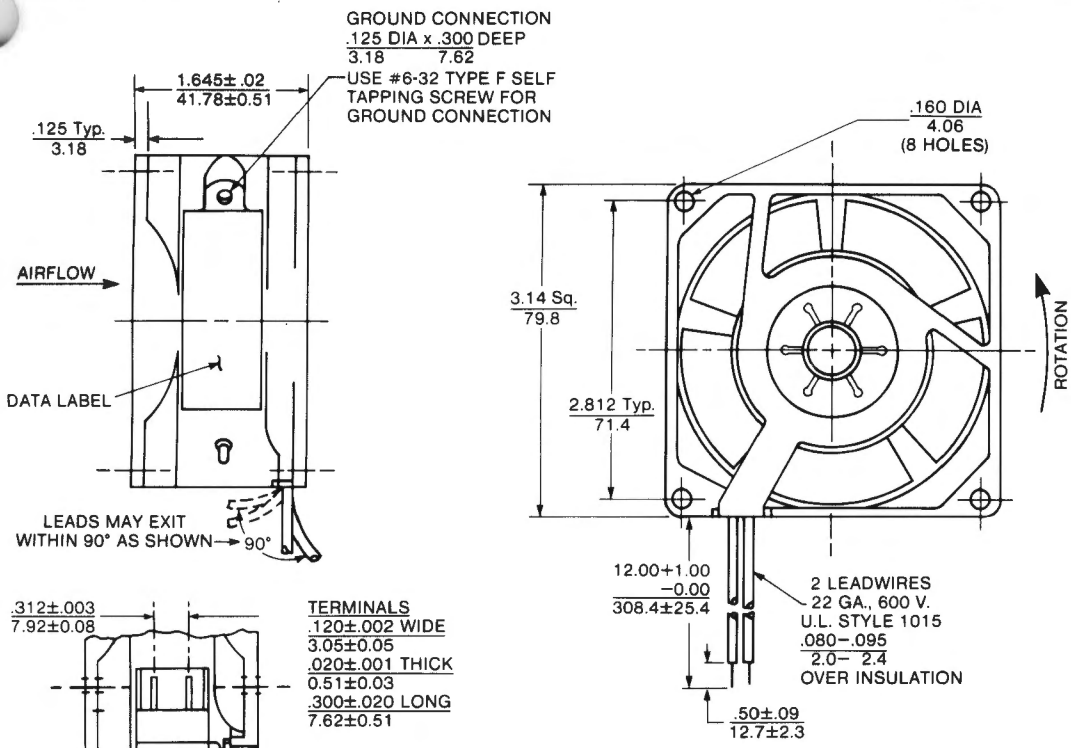

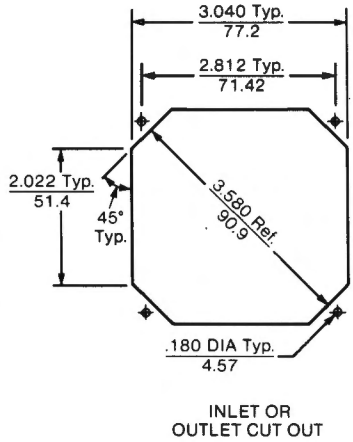

DIMENSIONS: in / mm ±
TOLERANCES: .xx= .03 / 0.8
.xxx=.010 / .25
(UNLESS NOTED)

Specifications subject to change without notice.

MOTOR

Two-pole shaded pole induction motor.
Insulation IEEE class 130.
Sintered bronze sleeve bearings.
Impedance protected.
100% dielectric tested at 1800 VAC/1 sec./500 microamps maximum leakage.

CONSTRUCTION

Venturi and Spider - zinc alloy, painted black
Propeller - flame retardant black polypropylene.

LIFE EXPECTANCY

The curve represents the continuous duty life of Sprite fans at a given temperature, after which 90% of the units will still be operating.

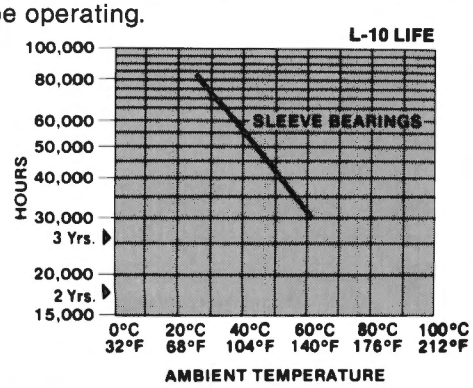

EXAMPLE: When run in 40°C ambient, 90% of sleeve bearing units will still be running after 55,000 hours continuous duty.

ACOUSTIC RATINGS (for definitions see page 5)

		AIR FLOW		STATIC PRESSURE		PER INCE ANSI S12.11-1987			FREELY SUSPENDED @ 1 METER
Models	HZ	CFM	L/Sec	"w.g.	mm H_2O	PSIL dB	SPL dBA @ 3'	NEPL Bels 'A'	dBA
SU2C7 SU2C7	50	15	7.1	0	0	21.2	29.3	3.93	25.6
		12	5.7	0.02	0.51	19.8	28.6	3.82	
	60	18	8.5	0	0	24.0	34.2	4.42	26.5
		15	7.1	0.019	0.48	23.3	35.0	4.50	
SU2E7 SU2E9	50	23	10.9	0	0	23.7	35.2	4.52	28.3
		14.5	6.8	0.03	0.76	23.5	32.1	4.21	
SU3E7 SU3E9	60	27	12.7	0	0	28.3	37.0	4.70	30.8
		19	9.0	0.047	1.19	29.4	38.1	4.81	
SU2G7 SU2G9	50	26	12.3	0	0	29.5	37.4	4.74	30.8
		16.2	7.6	0.056	1.42	30.7	37.0	4.70	
SU3G7 SU3G9	60	32	15.1	0	0	33.6	42.7	5.27	36.0
		22.4	10.6	0.069	1.75	33.6	41.9	5.19	
SU2A7 SU2A9	50	27	12.7	0	0	30.3	38.1	4.81	33.4
		21.8	10.3	0.034	0.86	29.7	38.5	4.85	
SU3A7 SU3A9	60	33	15.6	0	0	33.7	40.9	5.09	37.6
		26.2	12.4	0.052	1.32	33.6	43.1	5.31	

OPTIONS

Capable of furnishing:
Harness assemblies — See page 106.
Ball bearing versions

WHISPER® AC

TUBEAXIAL FAN

FEATURES

- ☐ Size - 4.71″ square x 1.50″ deep (119.6 mm x 38.1 mm)
- ☐ 57 to 80 CFM (26.9 to 37.8 L/Sec.)
- ☐ 115 VAC or 220/230 VAC, 1 phase, 50/60 Hz
- ☐ Low noise level
- ☐ Operating temperature range: −28°C to +70°C
- ☐ Weight - 17 oz. (.49 Kg)
- ☐ UL Yellow Card Recognized - File No. E31293 - all models
- ☐ CSA Certified - File No. LR52898 - all models

PERFORMANCE

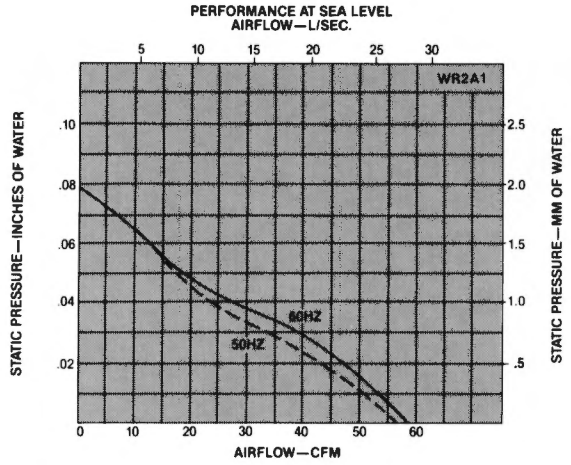

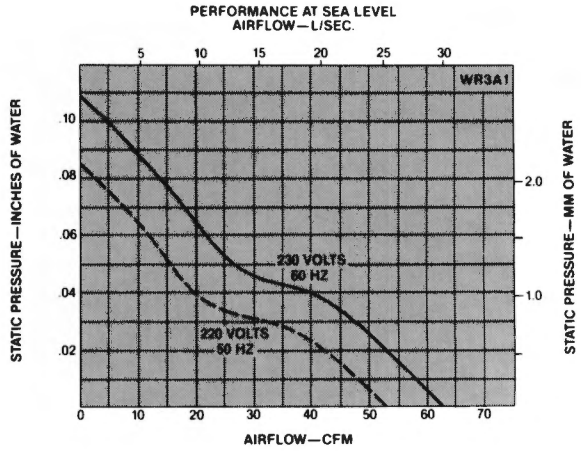

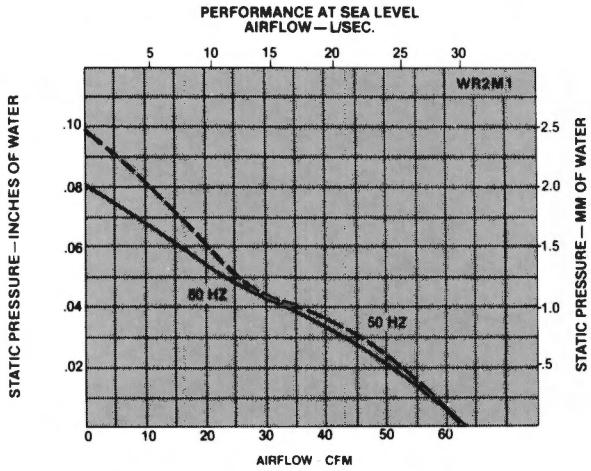

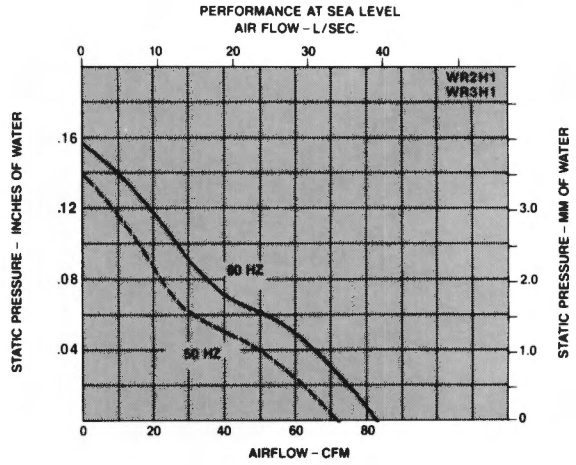

SPECIFICATIONS

Model No.	TERMINALS Part No.	Bearing	Volts	Hz	Watts	Line Amps	Locked Rotor Amps	RPM	CFM	L/Sec.
*WR2A1	027117	Sleeve	115	50/60	7/7	.07/.06	.08/.07	1640/1660	55/57	26.0/26.9
*WR3A1	028171	Sleeve	220/230	50/60	12/12	.07/.07	.07/.07	1590/2000	53/62	25.0/29.3
WR2M1	028291	Sleeve	115	50/60	7/7	.07/.07	.08/.08	2000/1960	63/63	29.7/29.7
*WR2H1	027119	Sleeve	115	50/60	11/10	.12/.11	.13/.12	2100/2400	70/80	33.0/37.8
WR3H1	028516	Sleeve	220/230	50/60	12/12	.07/.06	.08/.08	2100/2400	70/80	33.0/37.8

* Distributor Item.

All figures are nominal free delivery values at sea level

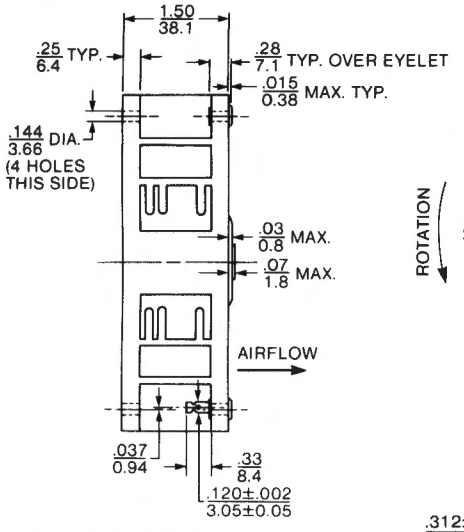

WILL ACCOMMODATE
477663 (FLUSH) OR 477670
(STANDOFF) MOUNTING CLIPS
WITH #6–32 MACHINE SCREW.

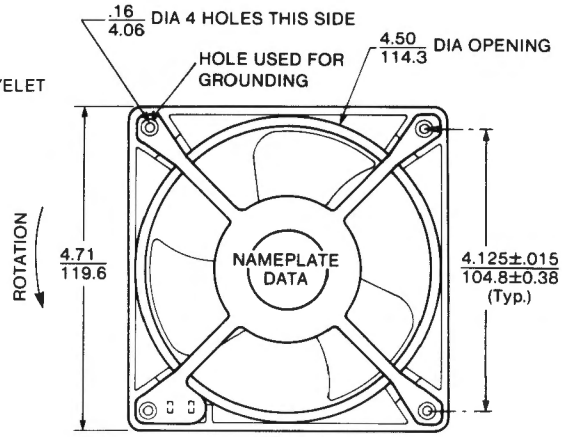

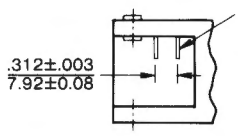

TERMINALS
.120±.002 WIDE
3.05±0.05
.020±.001 THICK
0.51±0.03
.300±.020 LONG
7.62±0.51
(WILL FIT PLUG
AND CORD #428056)

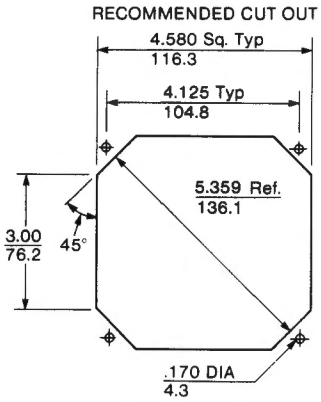

OUTLET (STRUT) SIDE

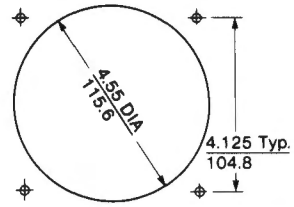

INLET (PROP) SIDE

DIMENSIONS: in/mm ±
TOLERANCES: .xx= .03/0.8
.xxx=.010/.25
(UNLESS NOTED)

Specifications subject to change without notice.

MOTOR

Two-pole shaded pole induction motor.
Insulation IEEE 130 temperature index.
Sintered bronze sleeve or stainless steel ball bearings.
Impedance protected.
100% dielectric tested at 1800 VAC/1 sec./500 microamps maximum leakage.

CONSTRUCTION

Venturi - flame retardant black phenolic.
Spider - zinc alloy, painted black.
Propeller - flame retardant black polypropylene.

LIFE EXPECTANCY

The curve represents the continuous duty life of Whisper fans at a given temperature after which 90% of the units will still be operating.

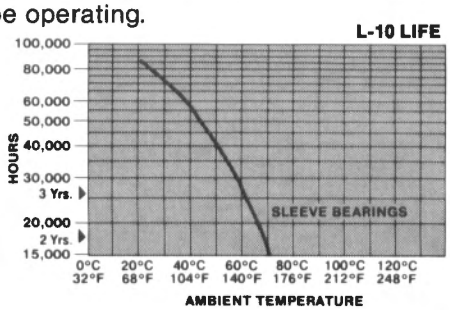

EXAMPLE: When run in 40°C ambient, 90% of sleeve bearing units will still be running after 55,000 hours continuous duty.

ACOUSTIC RATINGS (for definitions see page 5)

		AIR FLOW		STATIC PRESSURE		PER INCE ANSI S12.11-1987			FREELY SUSPENDED @ 1 METER
Models	HZ	CFM	L/Sec	"w.g.	mm H_2O	PSIL dB	SPL dBA @ 3'	NEPL Bels 'A'	dBA
WR2A1	50	55	26.0	0	0	27.4	36.1	4.61	30.7
		40.5	19.1	0.028	0.71	25.6	34.6	4.46	
	60	57	26.9	0	0	27.1	35.5	4.55	29.2
		40.4	19.1	0.026	0.66	26.0	34.8	4.48	
WR3A1	50	53	25.0	0	0	27.3	34.5	4.45	29.8
		43	20.3	0.032	0.81	25.8	33.8	4.38	
	60	63	29.7	0	0	31.2	37.4	4.74	33.9
		46.5	21.9	0.04	1.02	30.0	37.1	4.71	
WR2M1	50	63	29.7	0	0	30.3	36.7	4.67	31.2
		46	21.7	0.032	0.81	28.8	36.1	4.61	
	60	63	29.7	0	0	31.0	37.9	4.79	33.3
		40.5	19.1	0.04	1.02	30.2	37.1	4.71	
WR2H1	50	70	33.0	0	0	32.3	38.6	4.88	34.5
		55	26.0	0.03	0.76	32.3	39.1	4.91	
	60	80	37.8	0	0	35.5	41.8	5.18	37.6
		60	28.3	0.03	0.76	34.4	41.4	5.14	
WR3H1	50	70	33.0	0	0	31.3	37.7	4.77	34.0
		44	20.8	0.04	1.02	31.0	38.4	4.84	
	60	80	37.8	0	0	35.3	40.7	5.07	37.5
		50	23.6	0.05	1.27	34.0	41.7	5.17	

OPTIONS

Capable of furnishing:
Harness assemblies — See page 106.
Reverse flow models

WHISPER® XL AC

TUBEAXIAL FAN

FEATURES

- ☐ Size - 4.69″ square x 1.54″ deep (119.13 mm x 39.12 mm)
- ☐ 50 to 83 CFM (23.5 to 40.0 L/Sec.)
- ☐ 115 VAC or 220/230 VAC, 1 phase, 50/60 Hz
- ☐ Feathered Edge™ for lower noise
- ☐ Operating temperature range: −28°C to +70°C
- ☐ Weight - 21 oz. (.61 Kg)
- ☐ UL Yellow Card Recognized - File No. E31293 - all models
- ☐ CSA Certified - File No. LR52898 - all models
- ☐ VDE Marks License No. 1126 - all models

PERFORMANCE

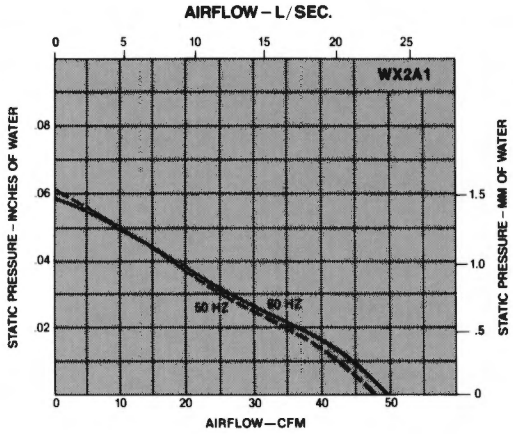

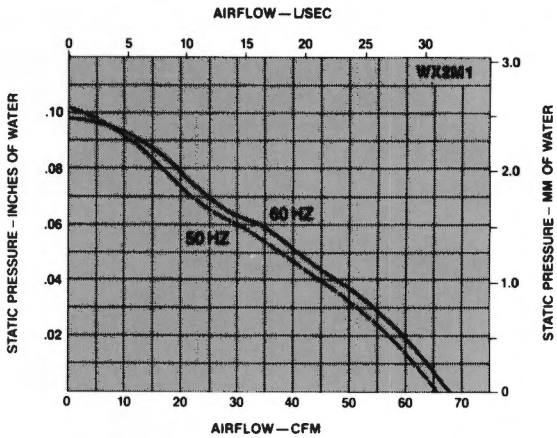

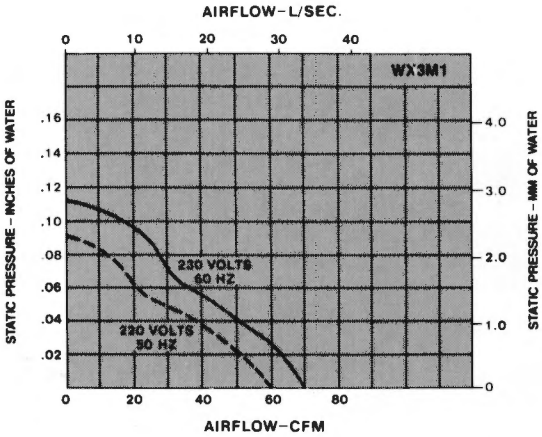

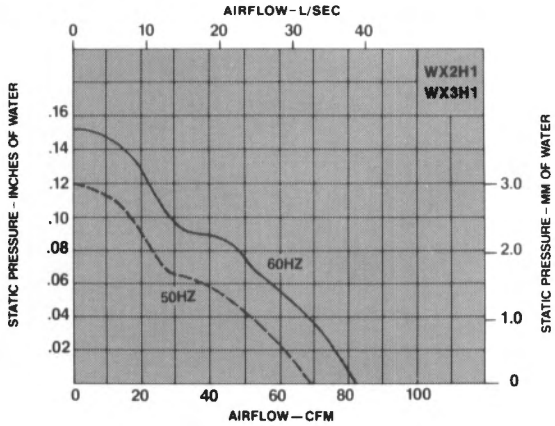

SPECIFICATIONS

Model No.	Part No.	Bearing	Volts	Hz	Watts	Line Amps	Locked Rotor Amps	RPM	CFM	L/Sec.
*WX2A1	028778	Sleeve	115	50/60	6/6	.07/.06	.08/.07	1450/1500	48/50	22.5/23.5
*WX2M1	028322	Sleeve	115	50/60	10/9	.11/.10	.12/.11	1900/2000	65/70	30.7/33.0
*WX3M1	028330	Sleeve	220/230	50/60	12/11	.07/.06	.07/.06	1800/2000	60/70	28.0/33.0
*WX2H1	028858	Sleeve	115	50/60	15/13	.19/.15	.20/.17	2200/2500	70/83	33.0/40.0
*WX3H1	028860	Sleeve	220/230	50/60	14/13	.10/.09	.11/.10	2200/2500	70/83	33.0/40.0

* Distributor Item.

All figures are nominal free delivery values at sea level.

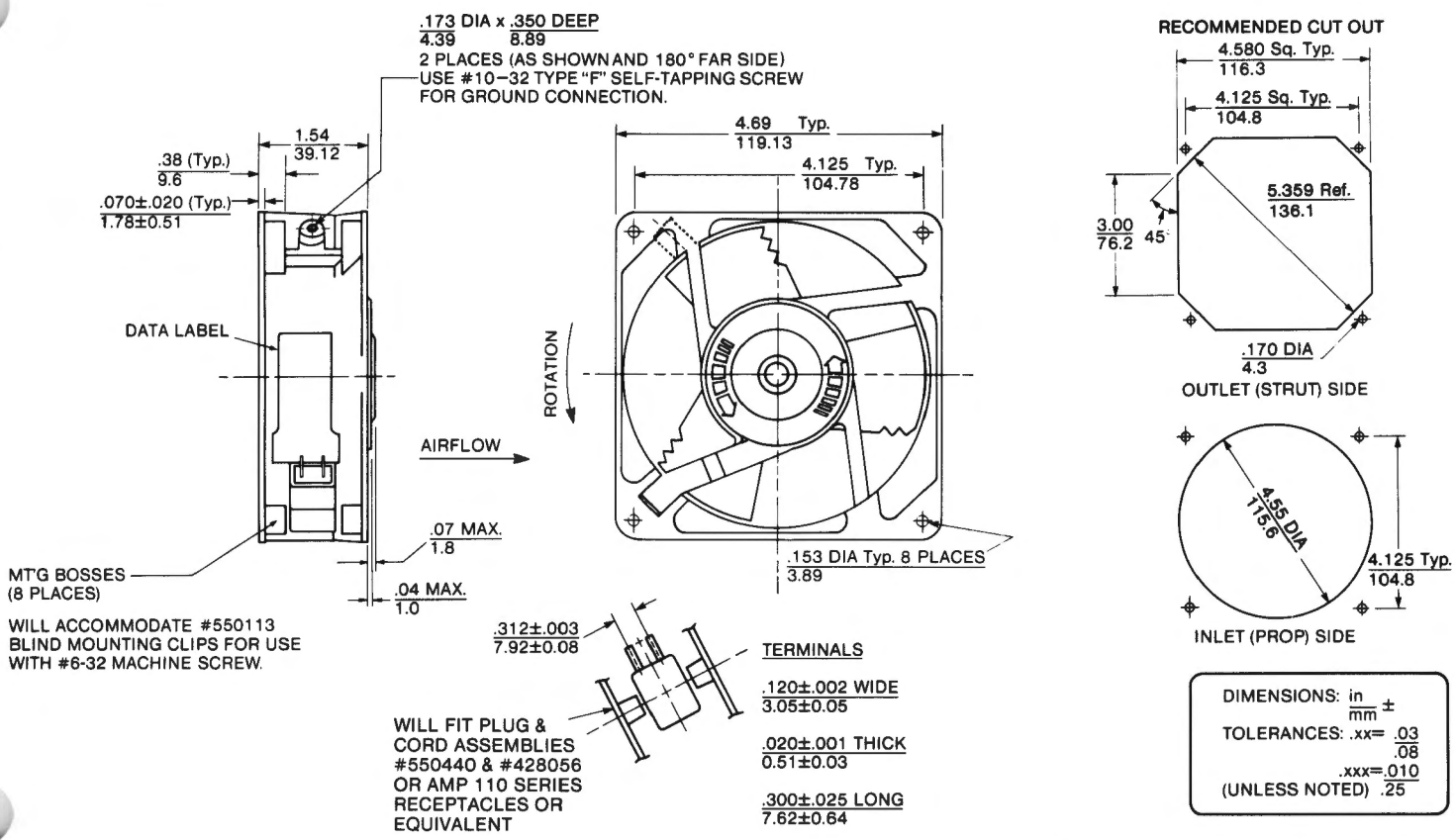

Specifications subject to change without notice.

MOTOR

Two-pole shaded pole induction motor.
Insulation IEEE class 130.
Sintered bronze sleeve bearings
Impedance protected.
100% dielectric tested at 1800 VAC/1 sec./500 microamps maximum leakage

CONSTRUCTION

Venturi and Spider - zinc alloy, painted black
Propeller - flame retardant polypropylene with patented Feathered Edge™.

LIFE EXPECTANCY

The curve represents the continuous duty life of Whisper XL fans at a given temperature, after which 90% of the units will still be operating.

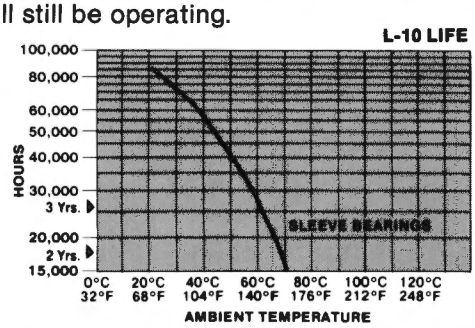

EXAMPLE: When run in 40°C ambient. 90% of sleeve bearing units will still be running after 55,000 hours continuous duty.

ACOUSTIC RATINGS (for definitions see page 5)

		AIR FLOW		STATIC PRESSURE		PER INCE ANSI S12.11-1987			FREELY SUSPENDED @ 1 METER
Models	HZ	CFM	L/Sec	"w.g.	mm H_2O	PSIL dB	SPL dBA @ 3'	NEPL Bels 'A'	dBA
WX2A1	50	48	22.7	0	0	29.1	35.3	4.65	29.7
		32	15.1	0.022	0.56	26.0	32.0	4.41	
	60	50	23.6	0	0	30.0	37.1	4.71	31.2
		26	12.3	0.025	0.64	24.0	30.1	4.34	
WX2M1	50	65	30.7	0	0	31.2	37.4	4.74	33.9
		45	21.2	0.04	1.02	29.0	35.1	4.59	
	60	70	33.0	0	0	32.3	38.6	4.88	34.5
		44	20.8	0.045	1.14	28.9	34.9	4.56	
WX3M1	50	60	28.3	0	0	34.4	41.4	5.14	37.8
		38	17.9	0.05	1.27	27.4	34.1	4.51	
	60	70	33.0	0	0	32.3	38.6	4.88	34.5
		47	22.2	0.045	1.14	30.0	37.1	4.71	
WX2H1 WX3H1	50	70	33.0	0	0	31.3	37.7	4.77	34.0
		40	18.9	0.055	1.40	28.0	34.8	4.48	
	60	83	39.2	0	0	35.0	40.2	5.04	37.1
		50	23.6	0.065	1.65	34.0	41.7	5.17	

OPTIONS

Capable of furnishing:
.187 terminals
Harness assemblies — See page 106.
Reverse flow models
Leadwire versions

MUFFIN® AC

TUBEAXIAL FAN

FEATURES

- ☐ Size - 4.71″ square x 1.50″ deep (119.6 mm x 38.1 mm)
- ☐ 105 CFM (49.6 L/Sec.)
- ☐ 115 VAC or 220/230 VAC, 1 phase, 50/60 Hz
- ☐ Low noise level
- ☐ Operating temperature range: −28°C to +70°C
- ☐ Weight - 17.2 oz. (.49 Kg)
- ☐ UL Yellow Card Recognized - File No. E31293 - all models
- ☐ CSA Certified - File No. LR52898 - all models

PERFORMANCE

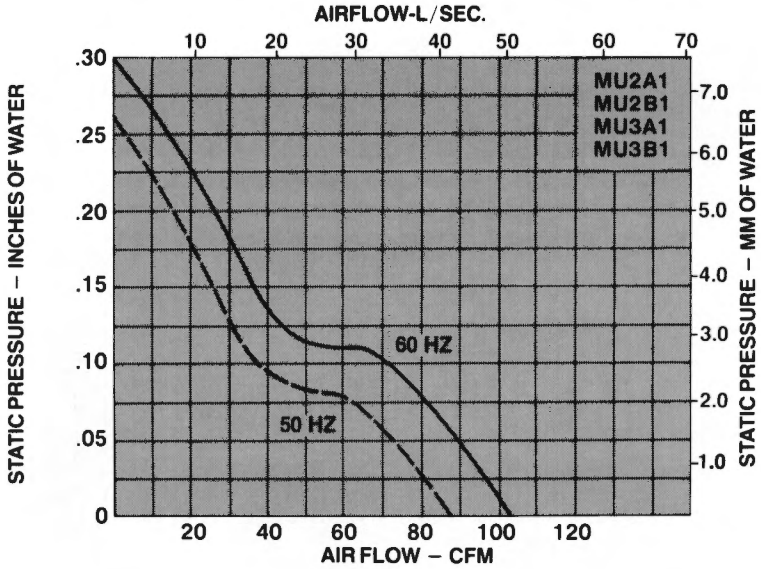

SPECIFICATIONS

Model No.	Part No.	Bearing	Volts	Hz	Watts	Line Amps	Locked Rotor Amps	RPM	CFM	L/Sec.
*MU2A1	028021	Sleeve	115	50/60	15/14	.19/.16	.26/.24	2650/3100	88/105	41.5/49.6
*MU2B1	028027	Ball	115	50/60	15/14	.19/.16	.26/.24	2650/3100	88/105	41.5/49.6
*MU3A1	028023	Sleeve	220/230	50/60	15/14	.10/.09	.14/.12	2650/3100	88/105	41.5/49.6
*MU3B1	028029	Ball	220/230	50/60	15/14	.10/.09	.14/.12	2650/3100	88/105	41.5/49.6

* Distributor Item.

All figures are nominal free delivery values at sea level.

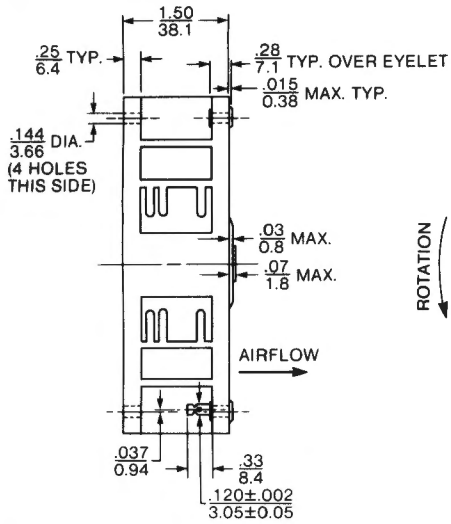

WILL ACCOMMODATE 477663 (FLUSH) OR 477670 (STANDOFF) MOUNTING CLIPS WITH #6–32 MACHINE SCREW

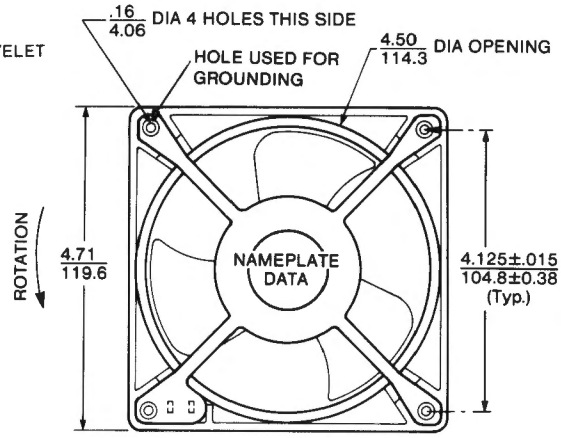

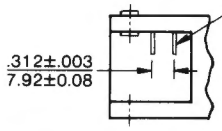

TERMINALS
.120±.002 WIDE
3.05±0.05
.020±.001 THICK
0.51±0.03
.300±.020 LONG
7.62±0.51
(WILL FIT PLUG AND CORD ASSEMBLY #428056)

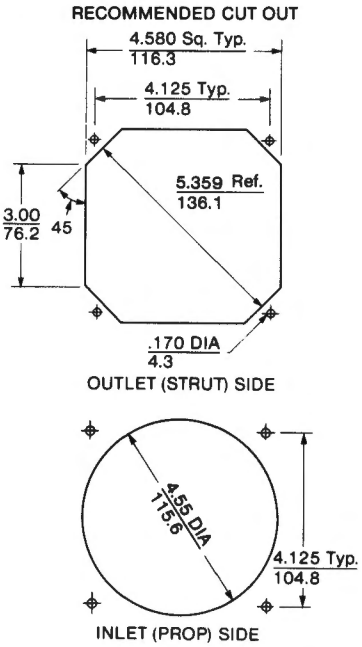

DIMENSIONS: in/mm ±
TOLERANCES: .xx= .03/0.8
.xxx=.010/.25
(UNLESS NOTED)

Specifications subject to change without notice.

MOTOR

Two-pole shaded pole induction motor.
Insulation system UL recognized Class B
Sintered bronze sleeve or stainless steel ball bearings.
Impedance protected.
100% dielectric tested at 1800 VAC/1 sec./500 microamps maximum leakage.

CONSTRUCTION

Venturi - flame retardant black phenolic.
Spider - zinc alloy, painted black.
Propeller - flame retardant black polypropylene.

LIFE EXPECTANCY

The curve represents the continuous duty life of Muffin fans at a given temperature after which 90% of the units will still be operating.

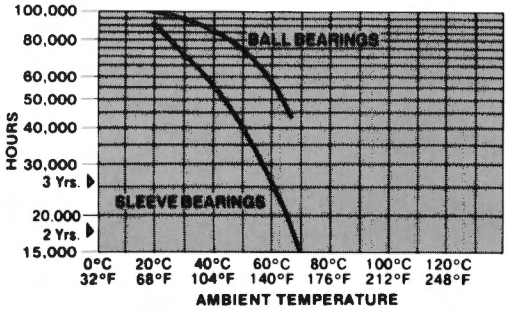

EXAMPLE: When run in 40°C ambient, 90% of sleeve bearing units will still be running after 55,000 hours continuous duty.

ACOUSTIC RATINGS (for definitions see page 5)

		AIR FLOW		STATIC PRESSURE		PER INCE ANSI S12.11-1987			FREELY SUSPENDED @ 1 METER
Models	HZ	CFM	L/Sec	"w.g.	mm H_2O	PSIL dB	SPL dBA @ 3'	NEPL Bels 'A'	dBA
MU2A1 MU3A1	50	88	41.5	0	0	37.9	44.2	5.42	40.2
		60.7	28.7	0.075	1.90	38.3	44.7	5.47	
	60	105	49.6	0	0	40.9	46.6	5.66	43.4
		71	33.5	0.100	2.54	40.1	47.2	5.72	
MU2B1 MU3B1	50	88	41.5	0	0	39.3	45.2	5.52	40.9
		62	29.3	0.078	1.98	38.8	45.0	5.50	
	60	105	49.6	0	0	43.1	49.4	5.94	45.1
		75	35.4	0.100	2.54	42.0	48.7	5.87	

OPTIONS

Capable of furnishing:
Harness assemblies — See page 106.
Reverse flow models

MUFFIN® XL AC

TUBEAXIAL FAN

FEATURES

- ☐ Size - 4.69" square x 1.54" deep (119.13 mm x 39.12 mm)
- ☐ 108 to 115 CFM (51.0 to 54.3 L/Sec.)
- ☐ 115 VAC or 220/230 VAC, 1 phase, 50/60 Hz
- ☐ Feathered Edge™ for lower noise levels
- ☐ Operating temperature range: −28°C to +70°C
- ☐ Weight - 21 oz. (.61 Kg)
- ☐ UL Yellow Card Recognized - File No. E31293 - all models
- ☐ CSA Certified - File No. LR52898 - all models
- ☐ VDE Marks License No. 1126 - all models

PERFORMANCE

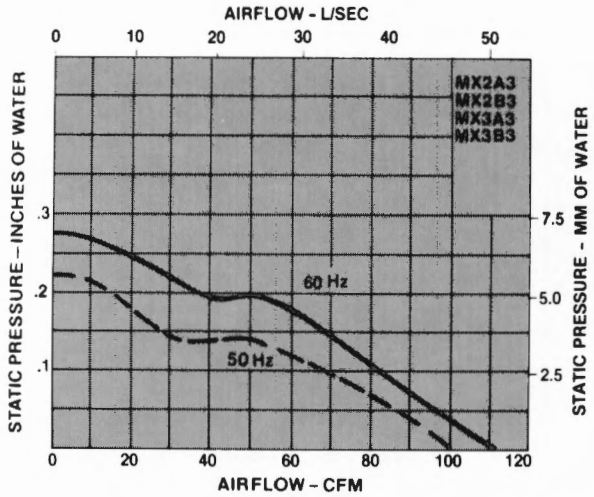

L – FLOW
AIR IN STRUT, OUT PROPELLER

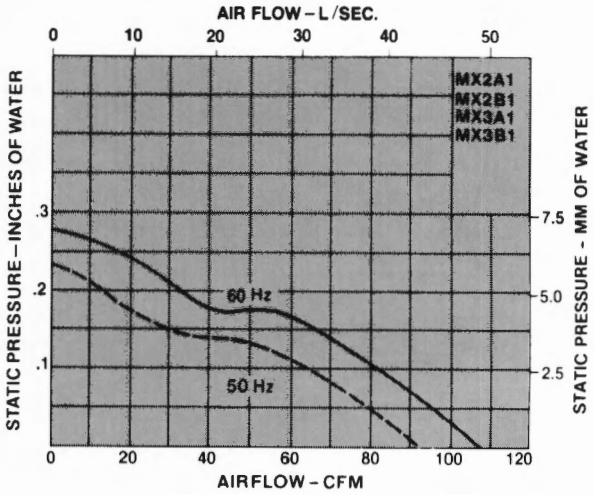

R – FLOW
AIR IN PROPELLER, OUT STRUT

SPECIFICATIONS

Model No.	Flow	Part No.	Bearing	Volts	Hz	Watts	Line Amps	Locked Rotor Amps	RPM	CFM	L/Sec.
*MX2A1	R	028318	Sleeve	115	50/60	17/15	.20/.18	.26/.24	2700/3100	92/108	43.4/51.0
*MX2B1	R	028420	Ball	115	50/60	17/15	.20/.18	.26/.24	2700/3100	92/108	43.4/51.0
*MX3A1	R	028326	Sleeve	220/230	50/60	17/16	.10/.09	.14/.12	2700/3100	92/108	43.4/51.0
MX3B1	R	028421	Ball	220/230	50/60	17/16	.10/.09	.14/.12	2700/3100	92/108	43.4/51.0
*MX2A3	L	028316	Sleeve	115	50/60	17/15	.20/.18	.26/.24	2700/3100	98/115	46.3/54.3
*MX2B3	L	028422	Ball	115	50/60	17/15	.20/.18	.26/.24	2700/3100	98/115	46.3/54.3
*MX3A3	L	028324	Sleeve	220/230	50/60	17/16	.10/.09	.14/.12	2700/3100	98/115	46.3/54.3
*MX3B3	L	028423	Ball	220/230	50/60	17/16	.10/.09	.14/.12	2700/3100	98/115	46.3/54.3

* Distributor Item.

All figures are nominal free delivery value at sea level.

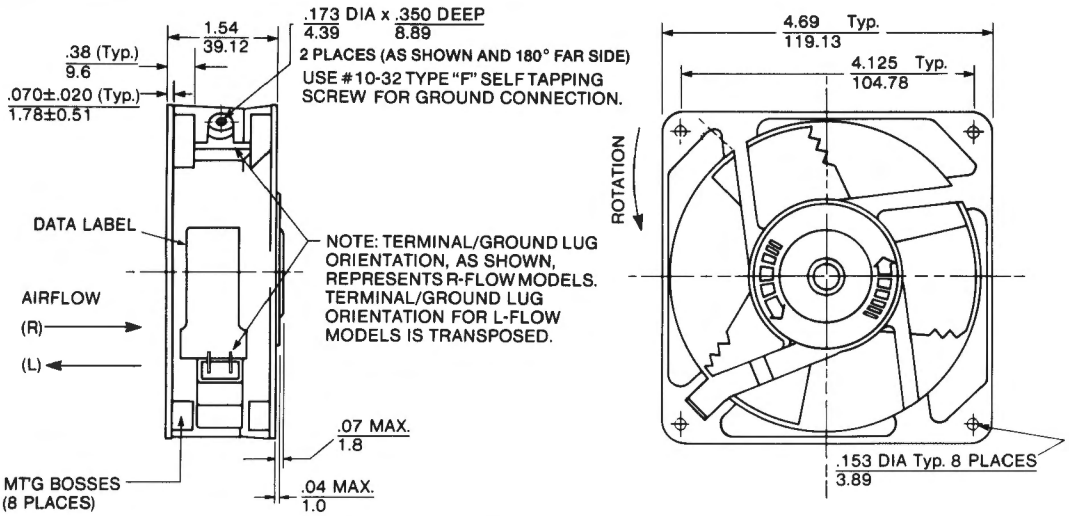

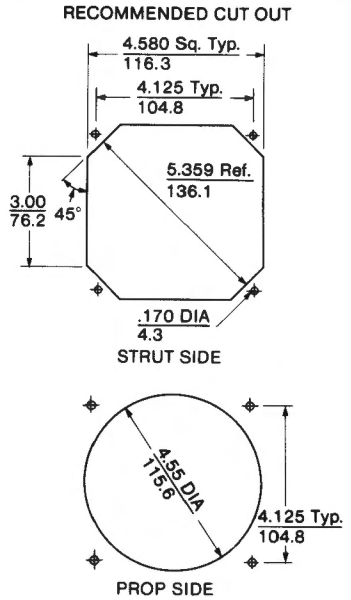

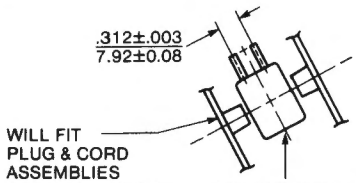

TERMINALS

.120±.002 WIDE
3.05±0.05

.020±.001 THICK
0.51±0.03

.300±.025 LONG
7.62±0.64

DIMENSIONS: in/mm ±
TOLERANCES: .xx= .03/0.8
.xxx=.010/.25
(UNLESS NOTED)

Specifications subject to change without notice.

MOTOR

Two-pole shaded pole induction motor.
Insulation system UL recognized Class B.
Sintered bronze sleeve or stainless steel ball bearings.
100% dielectric tested at 1800 VAC/1 sec./500 microamps maximum leakage.
Impedance protected.

CONSTRUCTION

Venturi and Spider - zinc alloy, painted black.
Propeller - flame retardant polypropylene with patented Feathered Edge™.

LIFE EXPECTANCY

The curve represents the continuous duty life of Muffin XL fans at a given temperature, after which 90% of the units will still be operating.

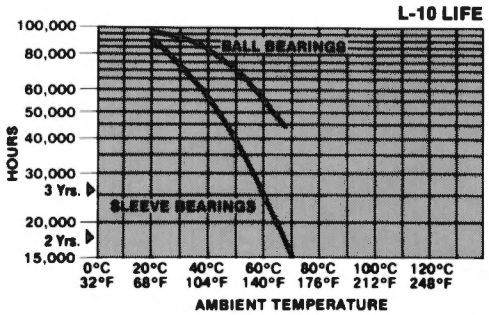

EXAMPLE: When run in 40°C ambient, 90% of sleeve bearing units will still be running after 55,000 hours continuous duty.

ACOUSTIC RATINGS (for definitions see page 5)

		AIR FLOW		STATIC PRESSURE		PER INCE ANSI S12.11-1987			FREELY SUSPENDED @ 1 METER
Models	HZ	CFM	L/Sec	"w.g.	mm H_2O	PSIL dB	SPL dBA @ 3'	NEPL Bels 'A'	dBA
MX2A1 MX3A1	50	92	43.4	0	0	42.5	47.7	5.77	43.8
		59	27.8	0.105	2.67	41.5	46.6	5.66	
	60	108	51.0	0	0	45.0	50.8	6.08	47.9
		68	32.1	0.13	3.30	43.8	49.5	5.95	
MX2A3 MX3A3	50	98	46.3	0	0	45.3	52.2	6.22	45.6
		61.3	28.9	0.11	2.79	41.8	47.4	5.74	
	60	115	54.3	0	0	50.0	56.2	6.62	50.0
		68.1	32.1	0.15	3.81	44.3	49.9	5.99	
MX2B1 MX3B1	50	92	43.4	0	0	42.8	48.2	5.82	44.8
		58	27.4	0.115	2.92	41.0	46.3	5.83	
	60	108	51.0	0	0	46.0	51.4	6.14	48.7
		63	29.7	0.15	3.81	44.5	49.7	5.97	
MX2B3 MX3B3	50	98	46.3	0	0	45.5	52.1	6.21	45.7
		42.4	20.0	0.13	3.30	42.0	48.2	5.82	
	60	115	54.3	0	0	49.6	55.1	6.51	49.8
		67.6	31.9	0.16	4.06	45.5	50.9	6.09	

OPTIONS

Capable of furnishing:
.187 terminals
Harness assemblies — See page 106.
Leadwire versions

SKELETON FANS AC

MUFFIN® & WHISPER®

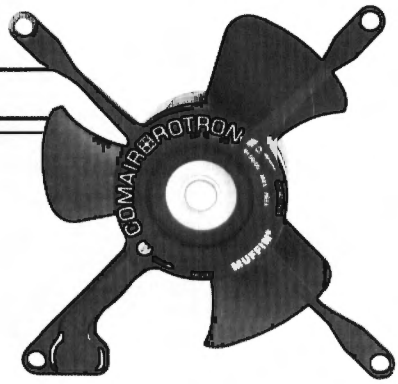

FEATURES

- ☐ Size - 4.50″ square x 1.50″ deep (114.3 mm x 38.1 mm)
- ☐ 57 to 105 CFM (26.9 to 49.6 L/Sec.)
- ☐ 115 VAC or 220/230 VAC, 1 phase, 50/60 Hz
- ☐ Low noise level
- ☐ Operating temperature range: −28°C to +70°C
- ☐ Weight - 12.8 oz. (.36 Kg)
- ☐ UL Yellow Card Recognized - File No. E31293 - all models
- ☐ CSA Certified - File No. LR52898 - all models

PERFORMANCE

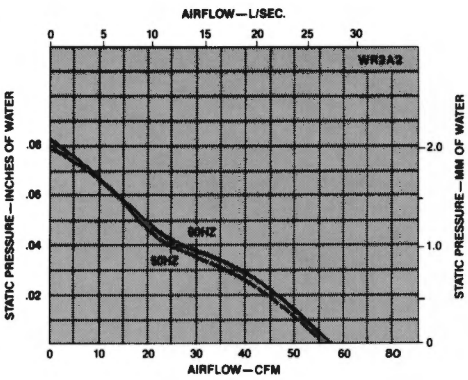

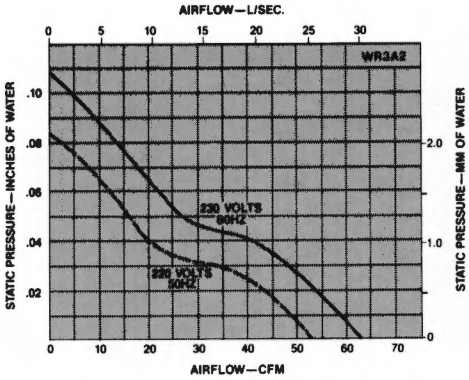

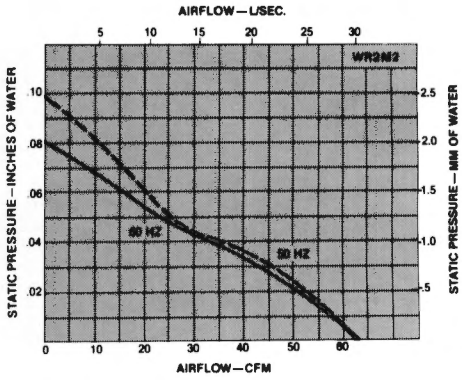

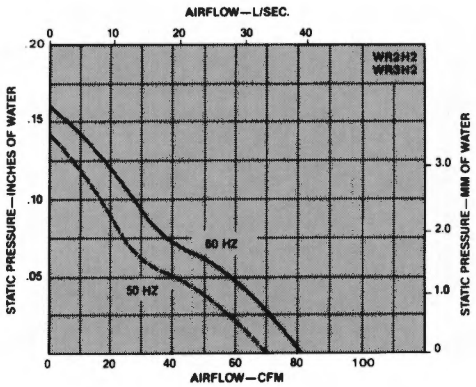

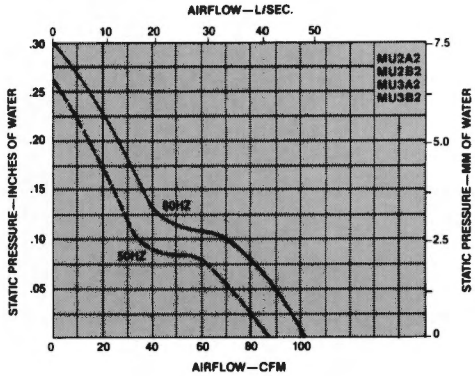

SPECIFICATIONS

Model No.	Part No.	Bearing	Volts	Hz	Watts	Line Amps	Locked Rotor Amps	RPM	CFM	L/Sec.
WR2A2	027118	Sleeve	115	50/60	7/7	.07/.06	.08/.07	1640/1660	55/57	26.0/26.9
WR3A2	030021	Sleeve	220/230	50/60	12/12	.07/.07	.07/.07	1800/2000	53/62	25.0/29.3
WR2M2	030104	Sleeve	115	50/60	7/7	.07/.07	.08/.08	2000/1950	63/63	29.7/29.7
WR2H2	027120	Sleeve	115	50/60	11/10	.12/.11	.13/.14	2100/2400	70/80	33.0/31.8
WR3H2	030106	Sleeve	220/230	50/60	12/12	.07/.06	.08/.08	2100/2400	70/80	33.0/37.8
MU2A2	028022	Sleeve	115	50/60	15/14	.18/.16	.26/.24	2650/3100	88/105	41.5/49.6
MU2B2	028028	Ball	115	50/60	15/14	.18/.16	.26/.24	2650/3100	88/105	41.5/49.6
MU3A2	028024	Sleeve	220/230	50/60	15/14	.10/.09	.14/.12	2650/3100	88/105	41.5/49.6
MU3B2	028030	Ball	220/230	50/60	15/14	.10/.09	.14/.12	2650/3100	88/105	41.5/49.6

All figures are nominal free delivery values at sea level with skeleton units mounted in an orifice with the same geometry as the I.D. of the Muffin/Whisper venturi.

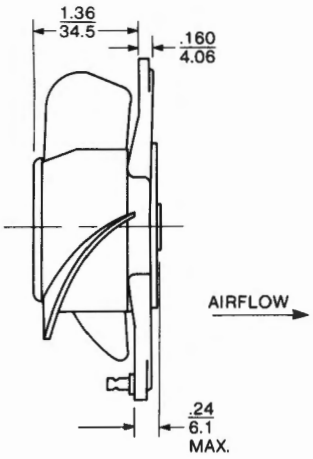

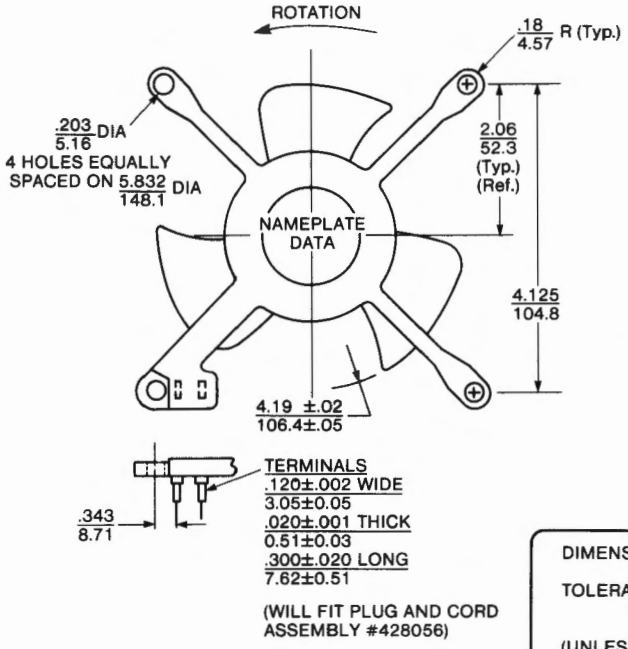

DIMENSIONS: in/mm ±
TOLERANCES: .xx= .03/0.8
.xxx=.010/.25
(UNLESS NOTED)

SUGGESTED MOUNTING – RECOMMENDED CUTOUT DIAMETER IN CUSTOMER PANEL IS 4.25" (108 MM)

Specifications subject to change without notice.

MOTOR

Two-pole shaded pole induction motor
Whisper motor insulation system IEEE Class 130
Muffin system UL recoginzed Class B
Sintered bronze sleeve or stainless steel ball bearings.
Impedance protected
100% dielectric tested at 1800 VAC/1 sec./500 microamps maximum leakage.

CONSTRUCTION

Spider - zinc alloy, painted black.
Propeller - flame retardant black polypropylene

LIFE EXPECTANCY

The curve represents the continuous duty life for Skeleton fans at a given temperature after which 90% of the units will still be operating.

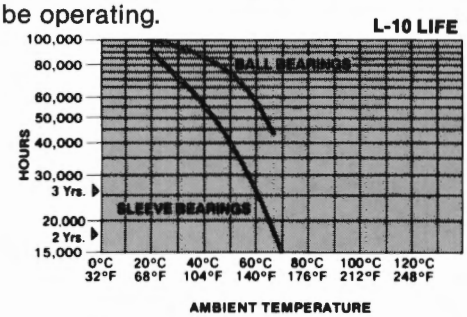

EXAMPLE: When run in 40°C ambient, 90% of sleeve bearing units will still be running after 55,000 hours continuous duty.

OPTIONS

Capable of furnishing:
Harness assemblies — See page 106.
Reverse flow models

ACOUSTIC RATINGS

(for definitions see page 5)

The aero and acoustical data on this page are taken with the skeleton units mounted in an orifice with the same geometry as the I.D. of the Muffin/Whisper venturi.

		AIR FLOW		STATIC PRESSURE		PER INCE ANSI S12.11-1987			FREELY SUSPENDED @ 1 METER
Models	HZ	CFM	L/Sec	"w.g.	mm H_2O	PSIL dB	SPL dBA @ 3'	NEPL Bels 'A'	dBA
WR2A2	50	55	26.0	0	0	27.4	36.1	4.61	30.7
		40.5	19.1	0.028	0.71	25.6	34.6	4.46	
	60	57	26.9	0	0	27.1	35.5	4.55	29.2
		40.4	19.1	0.026	0.66	26.0	34.8	4.48	
WR3A2	50	53	25.0	0	0	27.3	34.5	4.45	29.8
		43	20.3	0.032	0.81	25.8	33.8	4.38	
	60	63	29.7	0	0	31.2	37.4	4.74	33.9
		46.5	21.9	0.04	1.02	30.0	37.1	4.71	
WR2M2	50	63	29.7	0	0	30.3	36.7	4.67	31.2
		46	21.7	0.032	0.81	28.8	36.1	4.61	
	60	63	29.7	0	0	31.0	37.9	4.79	33.3
		40.5	19.1	0.04	1.02	30.2	37.1	4.71	
WR2H2	50	70	33.0	0	0	32.3	38.6	4.88	34.5
		55	26.0	0.03	0.76	32.3	39.1	4.91	
	60	80	37.8	0	0	35.5	41.8	5.18	37.6
		60	28.3	0.03	0.76	34.4	41.4	5.14	
WR3H2	50	70	33.0	0	0	31.3	37.7	4.77	34.0
		44	20.8	0.04	1.02	31.0	38.4	4.84	
	60	80	37.8	0	0	35.3	40.7	5.07	37.5
		50	23.6	0.05	1.27	34.0	41.7	5.17	
MU2A2 MU3A2	50	88	41.5	0	0	37.9	44.2	5.42	40.2
		60.7	28.7	0.075	1.91	38.3	44.7	5.47	
	60	105	49.6	0	0	40.9	46.6	5.66	43.4
		71	33.5	0.1	2.54	40.1	47.2	5.72	
MU2B2 MU3B2	50	88	41.5	0	0	39.3	45.2	5.52	40.9
		62	29.3	0.078	1.98	38.8	45.0	5.50	
	60	105	49.6	0	0	43.1	49.4	5.94	45.1
		75	35.4	0.1	2.54	42.0	48.7	5.87	

MAJOR® AC

TUBEAXIAL FAN

FEATURES

- ☐ Size - 6.75" x 5.92" x 2.00" deep (171.5 mm x 150.4 mm x 50.8 mm)
- ☐ 114 or 235 CFM (53.8 or 111 L/Sec.)
- ☐ 115 VAC or 220/230 VAC, 1 phase, 50/60 Hz
- ☐ Feathered Edge™ for lower noise
- ☐ Operating temperature range: −10°C to +70°C
- ☐ Weight - 1.84 lbs. (.84 Kg)
- ☐ UL Yellow Card Recognized - File No. E31293
- ☐ CSA Certified - File No. LR52898
- ☐ VDE Marks License No. 1354 - all models

PERFORMANCE

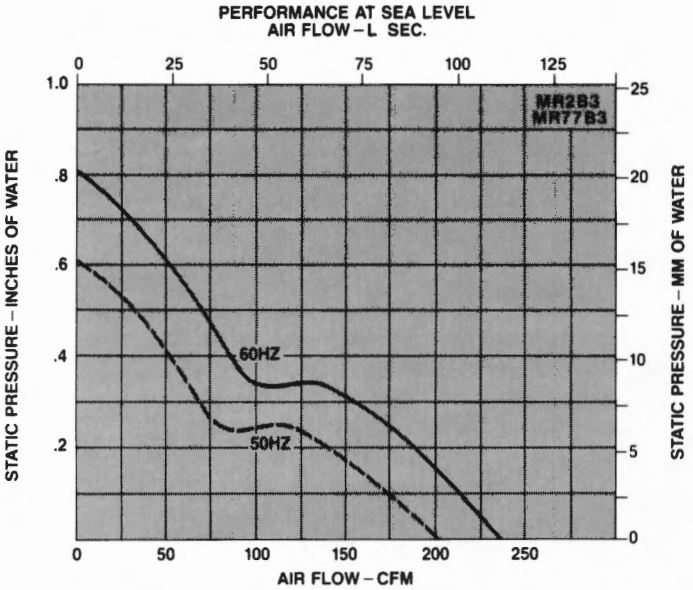

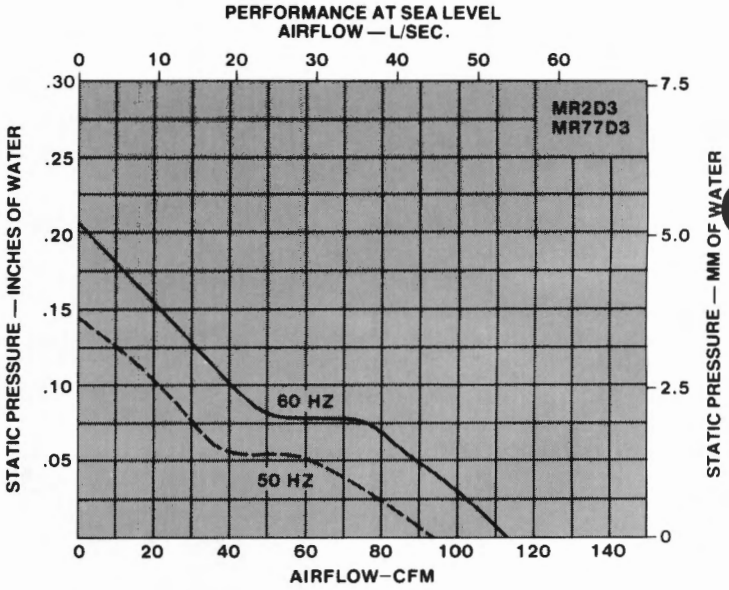

SPECIFICATIONS

Model No.	Part No.	Bearing	Volts	Hz	Watts	Line Amps	Locked Rotor Amps	RPM	CFM	L/Sec.
*MR2B3	028245	Ball	115	50/60	30/31	.27/.26	.48/.47	2850/3350	200/235	94/111
*MR77B3	028309	Ball	220/230	50/60	26/30	.13/.14	.23/.23	2850/3350	200/235	94/111
MR2D3	032118	Ball	115	50/60	18/16	.17/.15	.21/.20	1400/1700	94/114	44/53.8
MR77D3	032212	Ball	220/230	50/60	16/15	.09/.08	.11/.10	1400/1700	94/114	44/53.8

* Distributor Item.

All figures are nominal free delivery values at sea level.

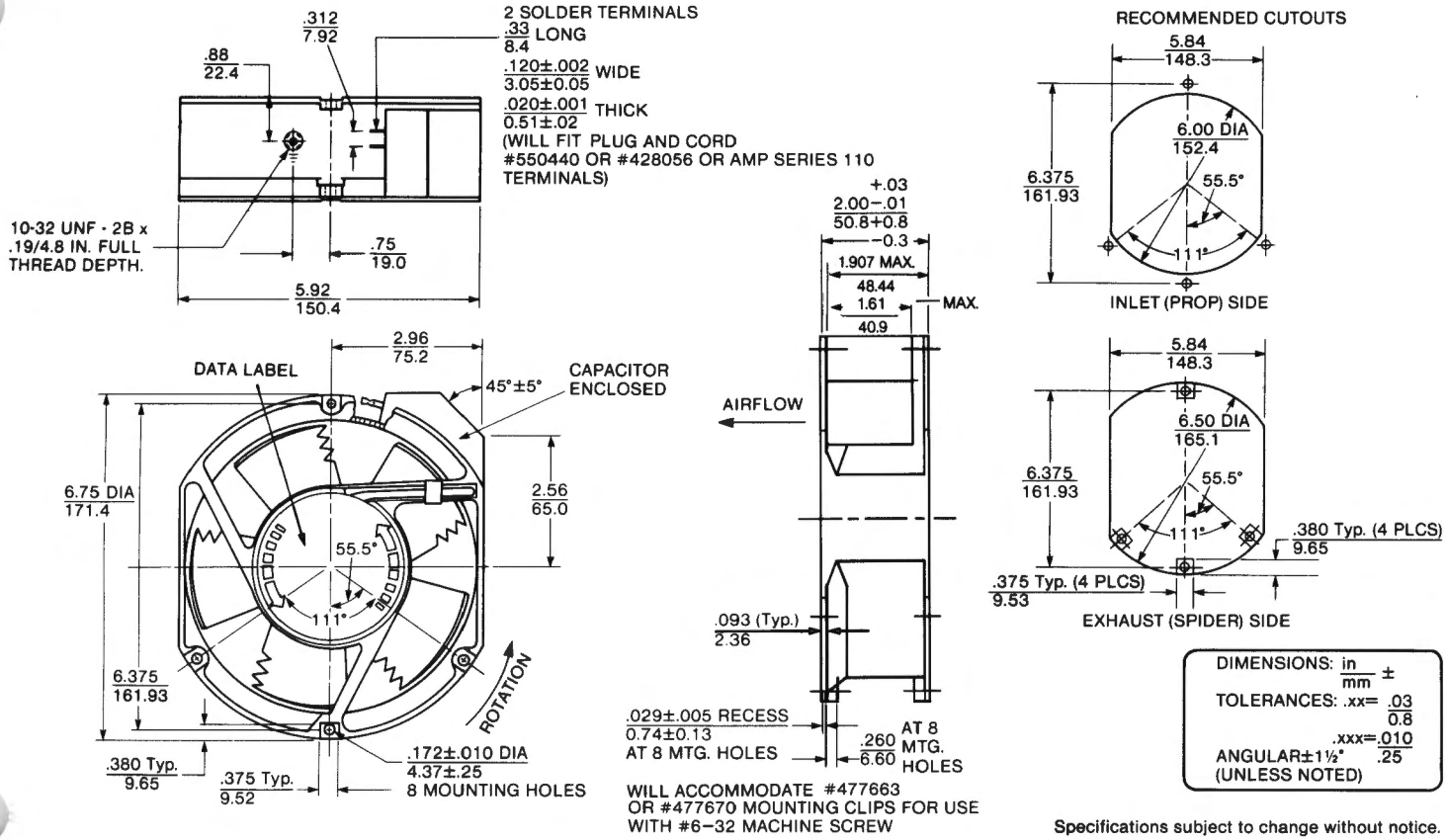

Specifications subject to change without notice.

MOTOR

Two-pole permanent split capacitor, 1 phase, 50/60 Hz.
Insulation Class B.
100% dielectric tested at 1800 VAC/1 sec./500 microamps maximum leakage.
Full speed automatic reset thermal protector.
Half speed impedence protected.
Capacitor - Dry polyester film.
Stainless steel ball bearings.

CONSTRUCTION

Venturi - Single piece die-cast aluminum, painted black.
Propeller and Capacitor Cover - Injection molded polycarbonate, black, meets UL94V-0 flammability rating.

LIFE EXPECTANCY

The curve represents the continuous duty life of Major fans at a given temperature, after which 90% of the units will still be operating.

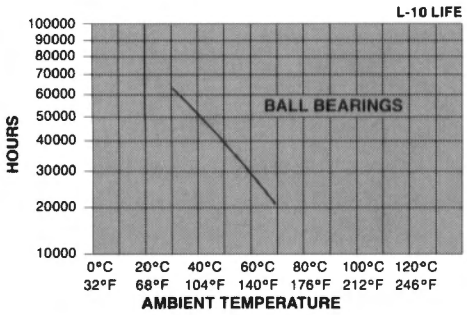

ACOUSTIC RATINGS (for definitions see page 5)

		AIR FLOW		STATIC PRESSURE		PER INCE ANSI S12.11-1987			FREELY SUSPENDED @ 1 METER
Models	HZ	CFM	L/Sec	"w.g.	mm H_2O	PSIL dB	SPL dBA @ 3'	NEPL Bels 'A'	dBA
MR2B3 MR77B3	50	200	92.8	0	0	49.6	56.1	6.61	52.2
		129	60.9	0.197	5.00	47.7	53.8	6.38	
	60	235	109.6	0	0	53.4	59.2	6.92	55.8
		147.5	69.6	0.310	11.00	50.6	57.3	6.73	
MR2D3 MR77D3	50	94	44.6	0	0	32.0	38.4	4.84	35.1
		86.4	40.8	0.059	1.50	31.2	37.3	4.73	
	60	114	54.0	0	0	36.1	42.9	5.29	39.2
		68	32.1	0.085	2.20	35.4	41.5	5.15	

OPTIONS

Capable of furnishing:
Various Fan Performance Sensor (FPS) options, see page 92
Harness assemblies — See page 106.
HI-REL version, see page 78.

MAJOR® AC HI-REL

TUBEAXIAL FAN

FEATURES

- ☐ Size - 6.75″ x 5.92″ x 2.00″ deep (171.5 mm x 150.4 mm x 50.8 mm)
- ☐ 235 CFM (111 L/Sec.)
- ☐ 115 VAC or 220/230 VAC, 1 phase, 50/60 Hz
- ☐ Feathered Edge™ for lower noise
- ☐ Operating temperature range: −10°C to +70°C
- ☐ Weight - 1.84 lbs. (.84 Kg)
- ☐ UL Yellow Card Recognized - File No. E31293
- ☐ CSA Certified - File No. LR52898
  VDE Approval Pending

PERFORMANCE

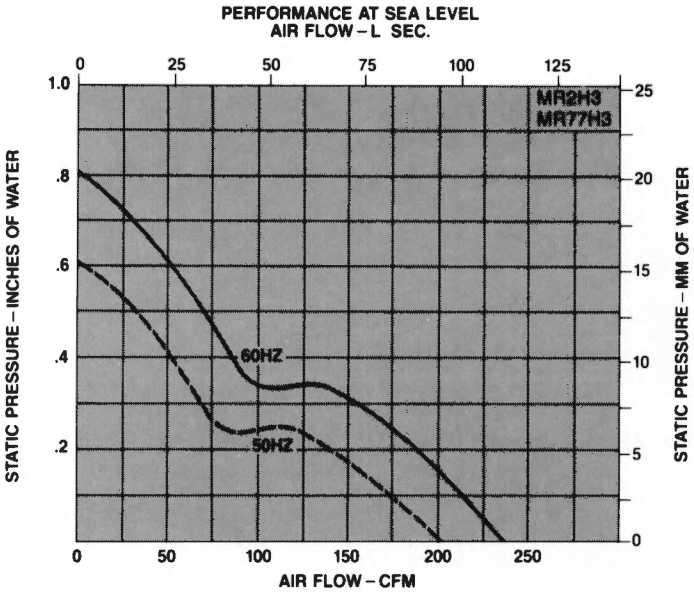

LIFE EXPECTANCY

The curve represents the continuous duty life of the Major Hi-Rel at a given temperature after which 90% of the units will still be operating.

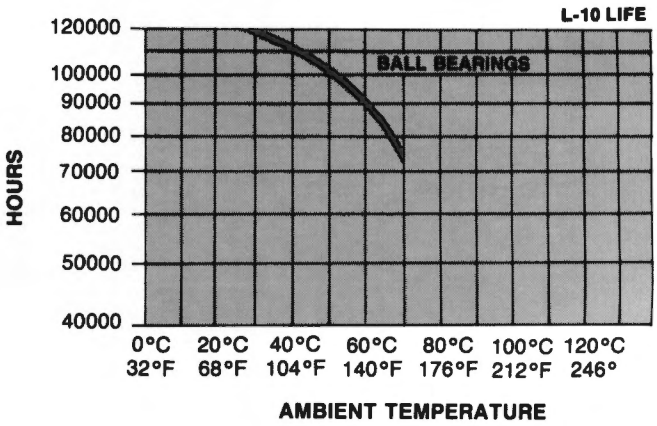

- ☐ Runs Cooler: approximately 10°C cooler bearing temperature than standard Major
- ☐ More Efficient: 10% less power consumption than standard Major
- ☐ Longer Life: as much as 5 years longer continuous operation than standard Major

SPECIFICATIONS

Model No.	Part No.	Bearing	Volts	Hz	Watts	Line Amps	Locked Rotor Amps	RPM	CFM	L/Sec.
MR2H3	030683	Ball	115	50/60	27/29	.24/.25	.44/.43	2850/3350	200/235	94/111
MR77H3	030684	Ball	220/230	50/60	25/29	.12/.13	.21/.22	2850/3350	200/235	94/111

All figures are nominal free delivery values at sea level.

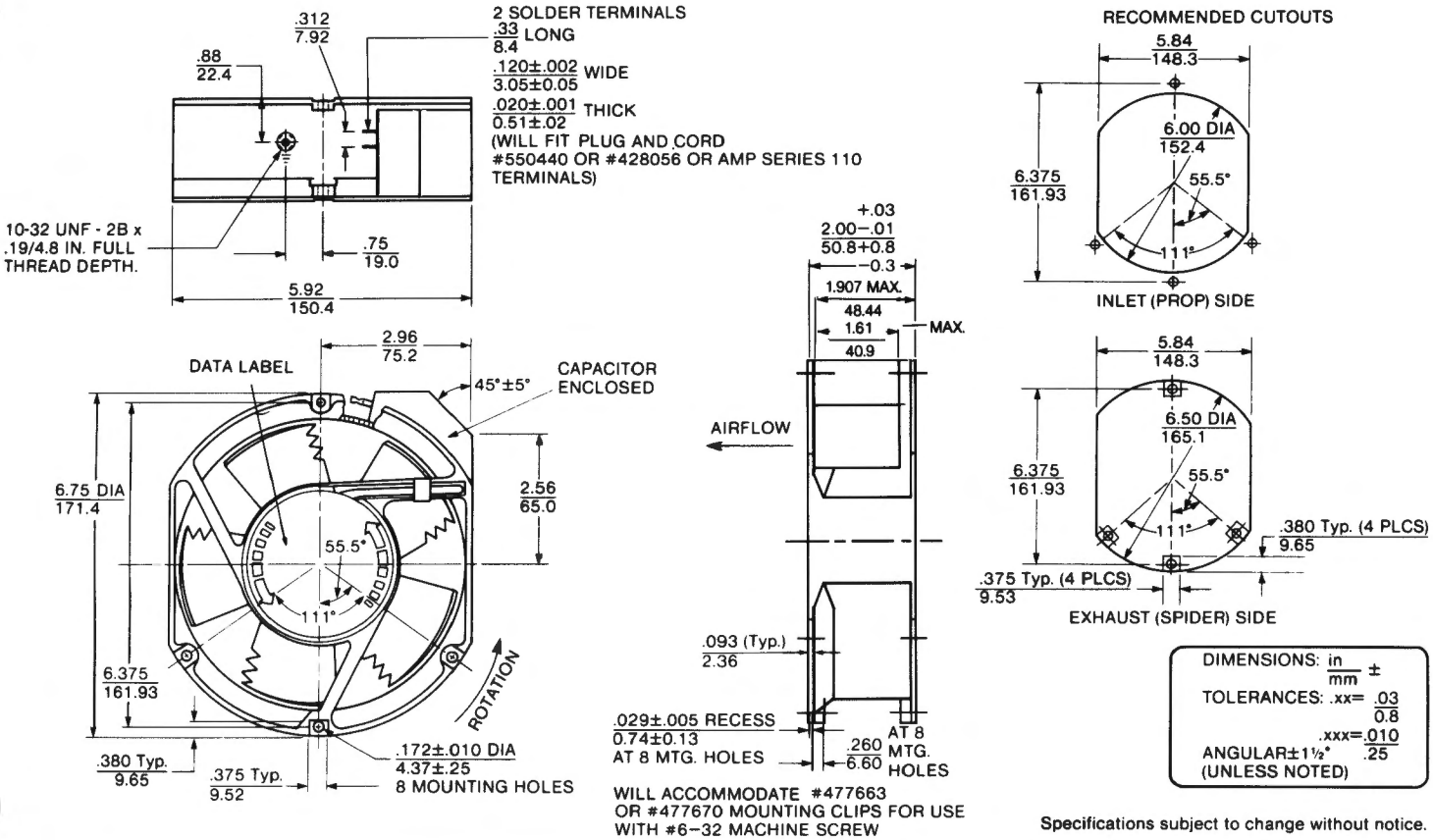

Specifications subject to change without notice.

MOTOR

Two-pole permanent split capacitor, 1 phase, 50/60 Hz.
Insulation Class B.
100% dielectric tested at 1800 VAC/1 sec./500 microamps maximum leakage.
Full speed automatic reset thermal protector.
Capacitor - Dry polyester film.
Stainless steel ball bearings.

CONSTRUCTION

Venturi - Single piece die-cast aluminum, painted black.
Propeller and Capacitor Cover - Injection molded polycarbonate, black, meets UL94V-0 flammability rating.

ACOUSTIC RATINGS (for definitions see page 5)

		AIR FLOW		STATIC PRESSURE		PER INCE ANSI S12.11-1987			FREELY SUSPENDED @ 1 METER
Models	HZ	CFM	L/Sec	"w.g.	mm H_2O	PSIL dB	SPL dBA @ 3'	NEPL Bels 'A'	dBA
MR2H3 MR77H3	50	200	92.8	0	0	49.6	56.1	6.61	52.2
		129	60.9	0.197	5.00	47.7	53.8	6.38	
	60	235	109.6	0	0	53.4	59.2	6.92	55.8
		147.5	69.6	0.310	11.0	50.6	57.3	6.73	

OPTIONS

Capable of furnishing:
Various Fan Performance Sensor (FPS) options, see page 92.
Harness assemblies — See page 106.

PATRIOT® AC

TUBEAXIAL FAN

FEATURES

- ☐ Size - 6.75" diameter x 2.00" deep (171.5 mm x 50.8 mm)
- ☐ 114 or 235 CFM (53.8 or 111 L/Sec.)
- ☐ 115 VAC or 220/230 VAC, 1 phase, 50/60 Hz or 3 phase, 400 Hz model available
- ☐ Feathered Edge™ for lower noise
- ☐ Operating temperature range: −10°C to +70°C
- ☐ Weight - 1.84 lbs. (.84 Kg)
- ☐ UL Yellow Card Recognized - File No. E31293
- ☐ CSA Certified—File No. LR52898
- ☐ VDE Marks License No. 1354—all models

PERFORMANCE

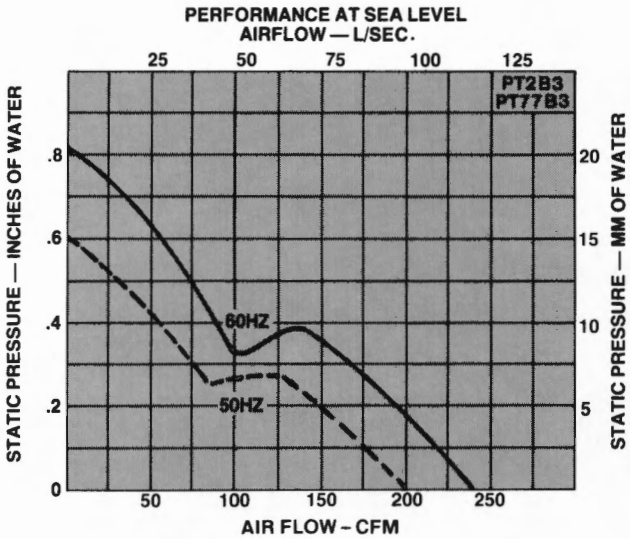

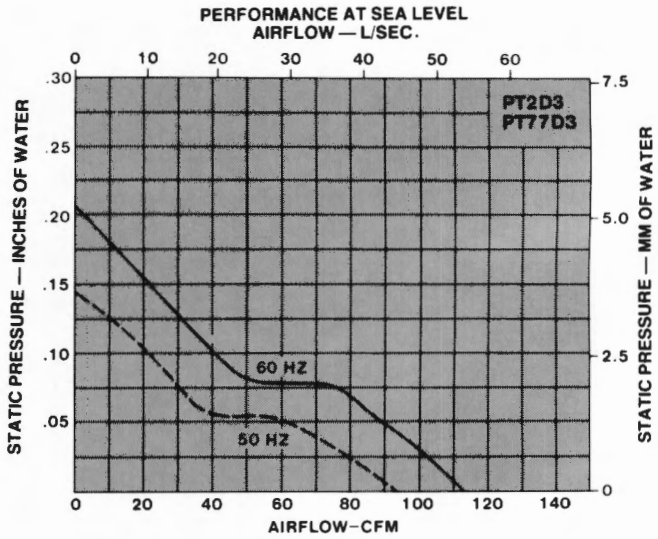

SPECIFICATIONS

Model No.	Part No.	Bearing	Volts	Hz	Watts	Line Amps	Locked Rotor Amps	RPM	CFM	L/Sec.
*PT2B3	028254	Ball	115	50/60	30/31	.27/.26	.48/.47	2850/3350	200/235	94/111
*PT77B3	028312	Ball	220/230	50/60	26/30	.13/.14	.23/.23	2850/3350	200/235	94/111
PT2D3	032213	Ball	115	50/60	18/16	.17/.15	.21/.20	1400/1700	94/114	44/53.8
PT77D3	032214	Ball	220/230	50/60	15/16	.09/.08	.11/.10	1400/1700	94/114	44/53.8

* Distributor Item.

All figures are nominal free delivery values at sea level.

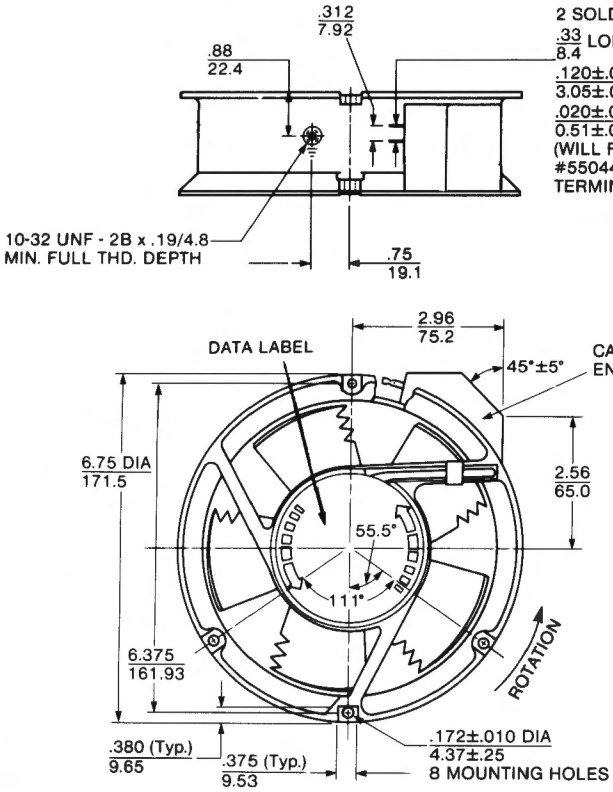

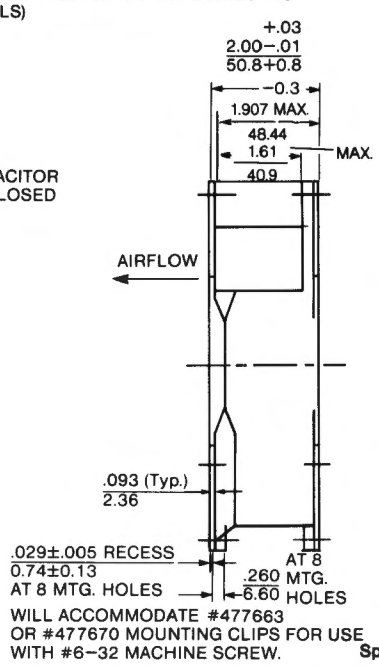

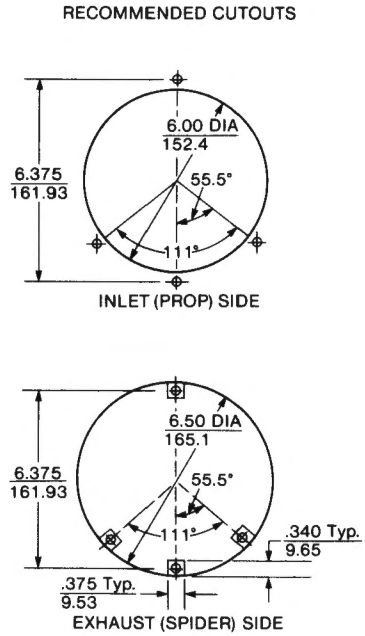

DIMENSIONS: in/mm ±
TOLERANCES: .xx= .03/0.8
.xxx=.010/.25
ANGULAR±1½°
(UNLESS NOTED)

Specifications subject to change without notice.

MOTOR

Two-pole permanent split capacitor, 1 phase, 50/60 Hz.
Insulation Class B.
100% dielectric tested at 1800 VAC/1 sec./500 microamps maximum leakage.
Full speed - automatic reset thermal protector.
Half speed - impedance protected.
Capacitor - Dry polyester film.
Stainless steel ball bearings.

CONSTRUCTION

Venturi - single piece die-cast aluminum, painted black.
Propeller and Capacitor Cover - Injection molded polycarbonate, black, meeting UL94V-0 flammability rating.

LIFE EXPECTANCY

The curve represents the continuous duty life of Patriot fans at a given temperature, after which 90% of the units will still be operating.

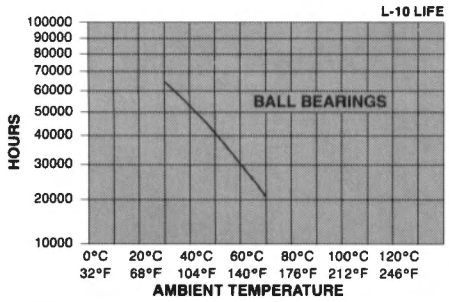

ACOUSTIC RATINGS (for definitions see page 5)

		AIR FLOW		STATIC PRESSURE		PER INCE ANSI S12.11-1987			FREELY SUSPENDED @ 1 METER
Models	HZ	CFM	L/Sec	"w.g.	mm H_2O	PSIL dB	SPL dBA @ 3'	NEPL Bels 'A'	dBA
PT2B3 PT77B3	50	200	93.1	0	0	46.6	53.6	6.36	50.3
		141.1	66.6	0.218	5.50	45.4	51.7	6.17	
	60	235	110.3	0	0	50.1	56.7	6.67	54.0
		160.2	75.6	0.322	8.20	48.1	54.5	6.45	
PT2D3 PT77D3	50	94	44.7	0	0	30.4	36.6	4.66	34.5
		58	27.4	0.06	1.50	29.8	36.0	4.60	
	60	114	54.0	0	0	34.0	40.1	5.01	37.5
		76	35.9	0.083	2.10	33.6	39.6	4.96	

OPTIONS

Capable of furnishing:
Various Fan Performance Sensor (FPS) options, see page 92
Harness assemblies — See page 106.
HI-REL version, see page 82.

PATRIOT® AC HI-REL

TUBEAXIAL FAN

FEATURES

- ☐ Size - 6.75" diameter x 2.00" deep (171.5 mm x 50.8 mm)
- ☐ 235 CFM (111 L/Sec.)
- ☐ 115 VAC or 220/230 VAC, 1 phase, 50/60 Hz
- ☐ Feathered Edge™ for lower noise
- ☐ Operating temperature range: −10°C to +70°C
- ☐ Weight - 1.84 lbs. (.84 Kg)
- ☐ UL Yellow Card Recognized - File No. E31293
- ☐ CSA Certified - File No. LR52898
- ☐ VDE Approval Pending

PERFORMANCE

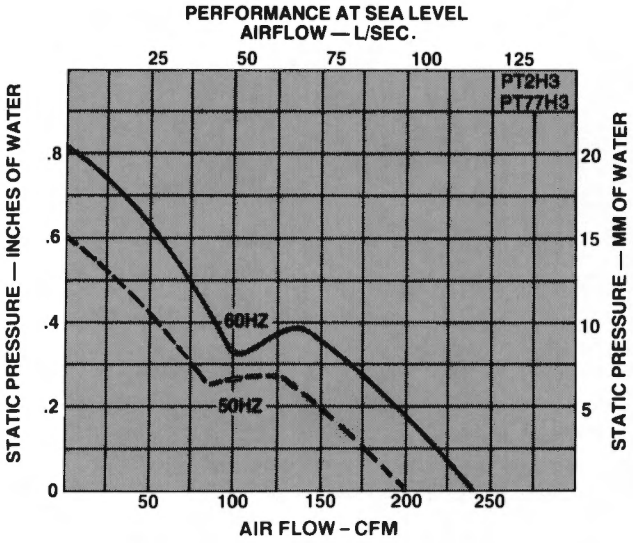

LIFE EXPECTANCY

The curve represents the continuous duty life of the Patriot Hi-Rel at a given temperature after which 90% of the units will still be operating.

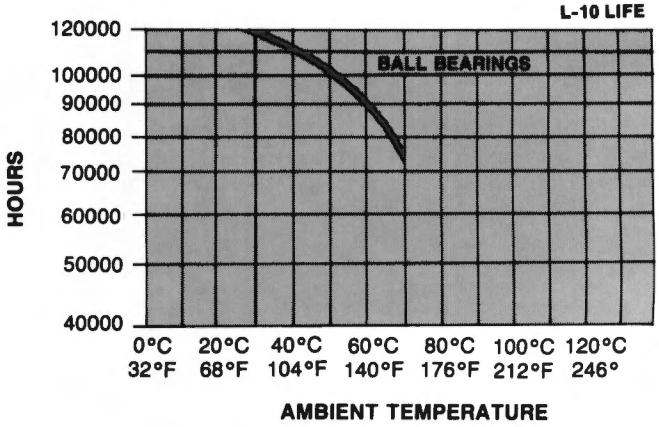

- ☐ Runs Cooler: approximately 10°C cooler bearing temperature than standard Patriot
- ☐ More Efficient: 10% less power consumption than standard Patriot
- ☐ Longer Life: as much as 5 years longer continuous operation than standard Patriot

SPECIFICATIONS

Model No.	Part No.	Bearing	Volts	Hz	Watts	Line Amps	Locked Rotor Amps	RPM	CFM	L/Sec.
PT2H3	030681	Ball	115	50/60	27/29	.24/.25	.44/.43	2850/3350	200/235	94/111
PT77H3	030682	Ball	220/230	50/60	25/29	.12/.13	.21/.22	2850/3350	200/235	94/111

All figures are nominal free delivery values at sea level.

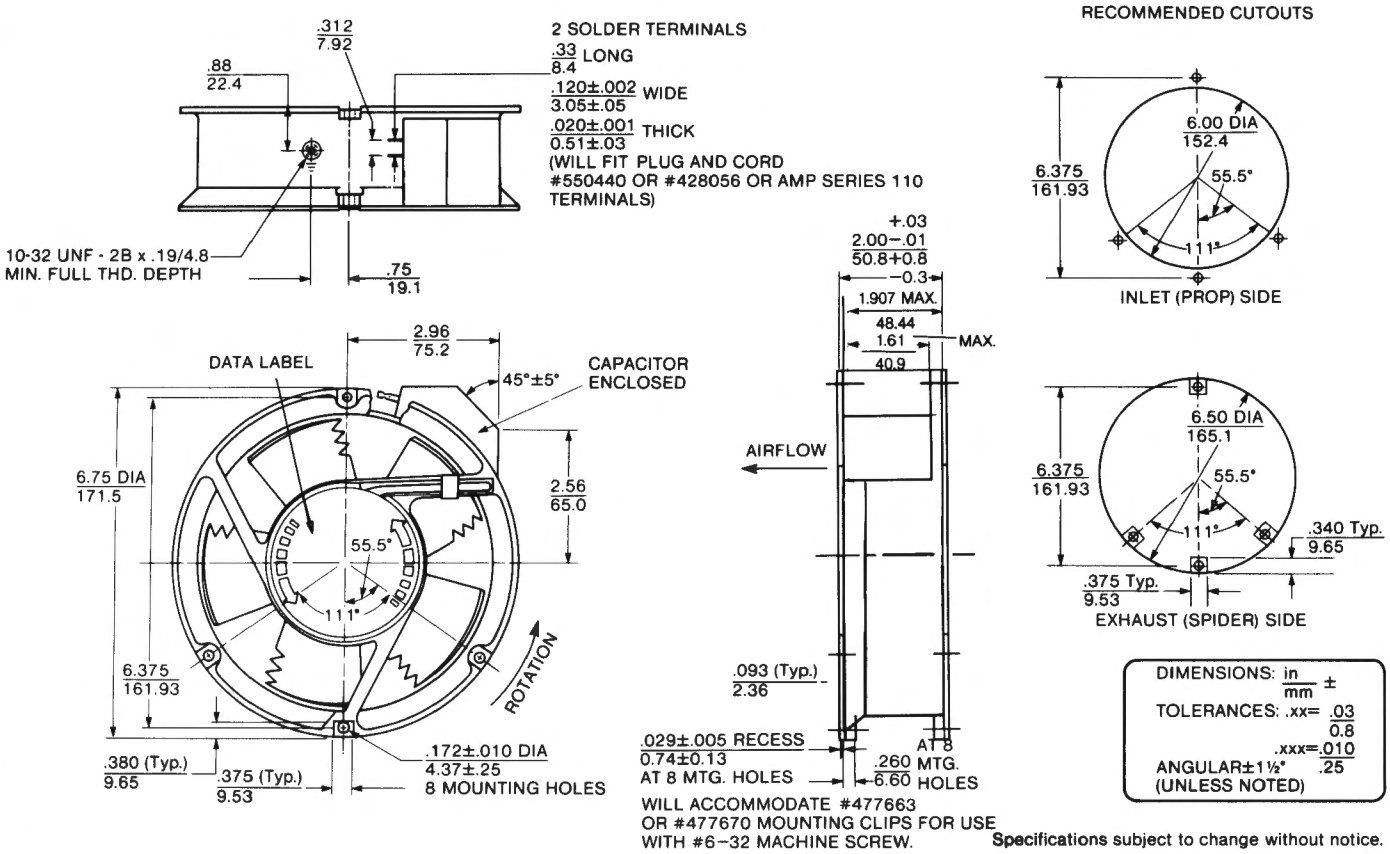

Specifications subject to change without notice.

MOTOR

Two-pole permanent split capacitor, 1 phase, 50/60 Hz.
Insulation Class B.
100% dielectric tested at 1800 VAC/1 sec./500 microamps maximum leakage.
Full speed - automatic reset thermal protector.
Capacitor - Dry polyester film.
Stainless steel ball bearings.

CONSTRUCTION

Venturi - single piece die-cast aluminum, painted black.
Propeller and Capacitor Cover - Injection molded polycarbonate, black, meeting UL94V-0 flammability rating.

ACOUSTIC RATINGS (for definitions see page 5)

		AIR FLOW		STATIC PRESSURE		PER INCE ANSI S12.11-1987			FREELY SUSPENDED @ 1 METER
Models	HZ	CFM	L/Sec	"w.g.	mm H_2O	PSIL dB	SPL dBA @ 3'	NEPL Bels 'A'	dBA
PT2H3 PT77H3	50	200	93.1	0	0	46.6	53.6	6.36	50.3
		141.1	66.6	0.218	5.50	45.4	51.7	6.17	
	60	235	110.3	0	0	50.1	56.7	6.67	54.0
		160.2	75.6	0.322	8.20	48.1	54.5	6.45	

OPTIONS

Capable of furnishing:
Various Fan Performance Sensor (FPS) options, see page 92
Harness assemblies — See page 106.

TARZAN® AC

TUBEAXIAL FAN

FEATURES

- ☐ Size - 6.91″ square x 4.40″ deep (175.5 mm x 111.8 mm)
- ☐ 340 CFM (160 L/Sec.)
- ☐ 115 VAC or 220/230 VAC, 1 phase, 50/60 Hz
- ☐ Operating temperature range: −18°C to +60°C
- ☐ Weight - 5 lbs. (2.27 Kg)
- ☐ UL Yellow Card Recognized - File No. E31293
- ☐ CSA Certified - File No. LR52898

PERFORMANCE

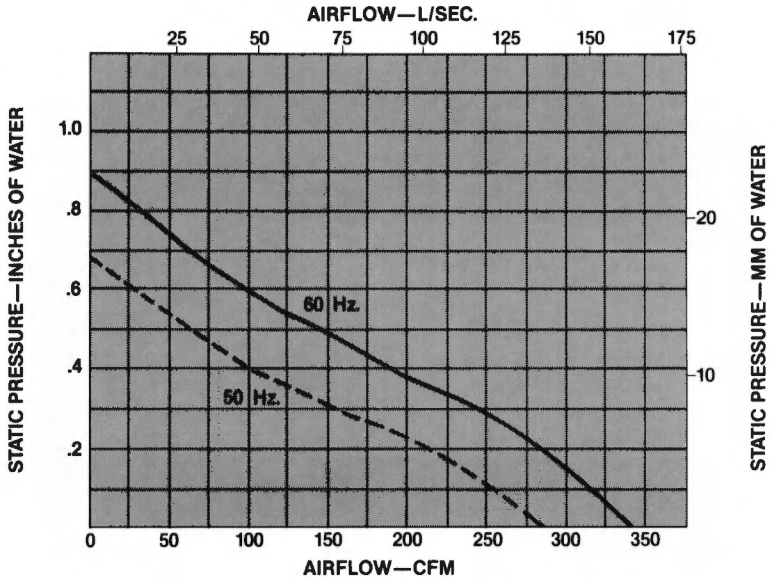

SPECIFICATIONS

LEADWIRES		TERMINALS										
Model No.	Part No.	Model No.	Part No.	Bearing	Volts	Hz	Watts	Line Amps	Locked Rotor Amps	RPM	CFM	L/Sec.
*TN3C2	020169	*TN3A2	020174	Ball	115	50/60	90/85	1.4/1.2	2.4/2.0	2820/3350	280/340	132/160
*TN3C3	020177	*TN3A3	020172	Ball	220/230	50/60	82/85	.65/.60	1.1/.98	2820/3350	280/340	132/160

*Distributor Item.

All figures are nominal free delivery values at sea level.

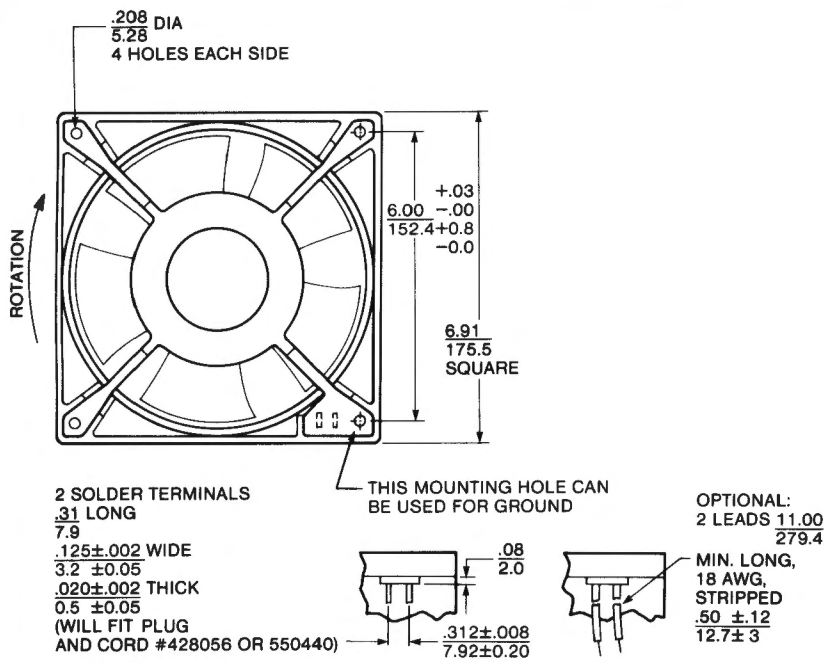

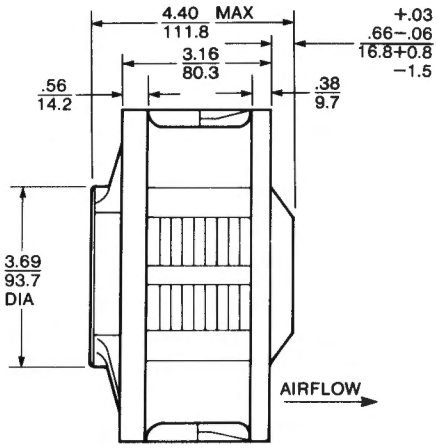

Suggested Mounting - Recommended cutout diameter in customer panel is 6.75 / 171.4

DIMENSIONS: in / mm ±
TOLERANCES: .xx= .03 / 0.8
.xxx=.010 / .25
(UNLESS NOTED)

Specifications subject to change without notice.

MOTOR

Two-pole shaded pole induction motor.
Class A insulation.
Automatic reset Thermal protector.
Sealed ball bearings.
100% dielectric tested at 1800 VAC/1 sec./500 microamps maximum leakage.

CONSTRUCTION

Venturi - compression molded of flame retardant Thermoset plastic (phenolic), black.
Spider - die-cast aluminum alloy, painted black.
Propeller - Injection moled of flame retardant polycarbonate, black.

LIFE EXPECTANCY

The curve represents the continuous duty life of Tarzan fans at a given temperature after which 90% of the units will still be operating.

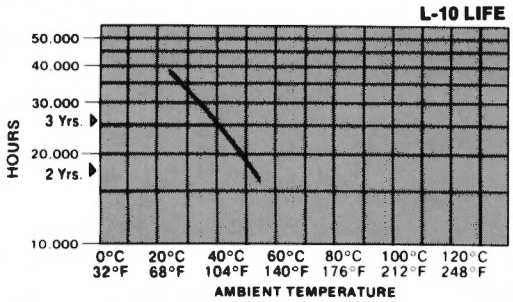

EXAMPLE: When run at 40°C ambient, 90% of units will still be running after 25,000 continuous hours.

ACOUSTIC RATINGS (for definitions see page 5)

		AIR FLOW		STATIC PRESSURE		PER INCE ANSI S12.11-1987			FREELY SUSPENDED @ 1 METER
Models	HZ	CFM	L/Sec	"w.g.	mm H_2O	PSIL dB	SPL dBA @ 3'	NEPL Bels 'A'	dBA
TN3A2 TN3C2	50	280	131.8	0	0	56.5	61.8	7.18	61.6
		168.4	79.5	0.270	6.90	54.9	60.1	7.01	
TN3A3 TN3C3	60	340	155.6	0	0	60.5	66.5	7.65	65.4
		207.9	98.1	0.343	8.70	58.4	63.6	7.36	

OPTIONS

Capable of furnishing:
Terminals or leadwires
Harness assemblies — See page 106.

CARAVEL® AC

TUBEAXIAL FAN

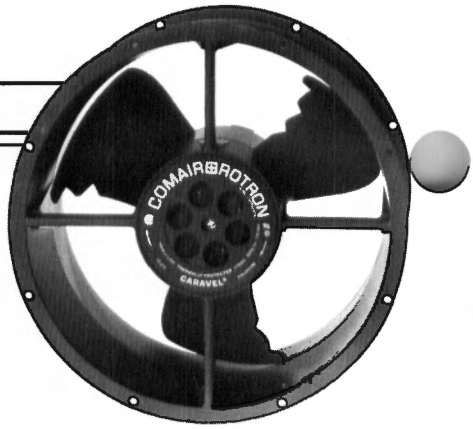

FEATURES

- ☐ Size - 10.00" diameter x 3.50" deep (254.0 mm x 88.9 mm)
- ☐ 550 CFM (260 L/Sec.)
- ☐ 115 VAC or 220/230 VAC, 1 phase, 50/60 Hz
- ☐ Feathered Edge™ for lower noise.
- ☐ Operating temperature range: −30°C to +60°C
- ☐ Weight 4.4 lbs. (2.0 Kg)
- ☐ UL Yellow Card Recognized - File No. E31293
- ☐ CSA Certified -File No. LR52898

PERFORMANCE

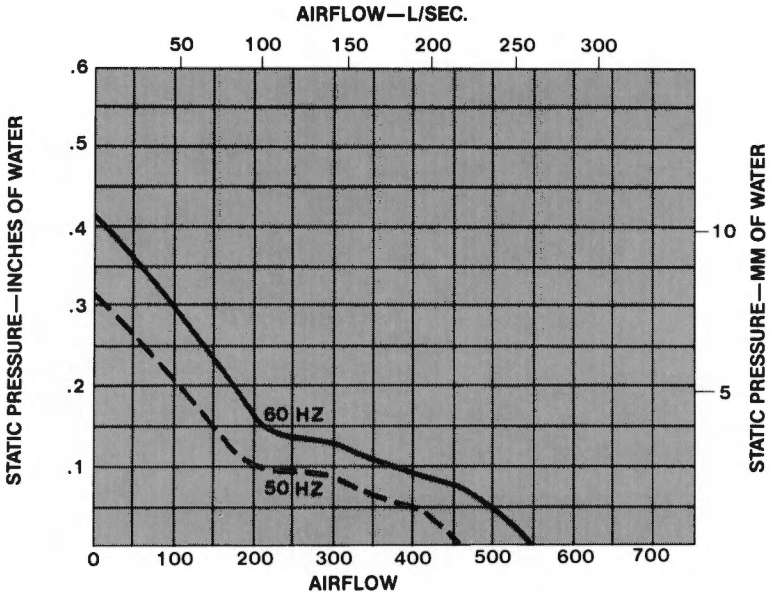

SPECIFICATIONS

LEADWIRES Model No.	LEADWIRES Part No.	TERMINALS Model No.	TERMINALS Part No.	Bearing	Volts	Hz	Watts	Line Amps	Locked Rotor Amps	RPM	CFM	L/Sec.
*CL2L2	020188	*CL2T2	020189	Ball	115	50/60	67/61	1.0/.88	1.3/1.1	1400/1650	455/550	215/260
*CL3L2	020190	*CL3T2	020191	Ball	220/230	50/60	60/60	.47/.43	.60/.55	1400/1650	455/550	215/260

* Distributor Item.

All figures are nominal free delivery values at sea level.

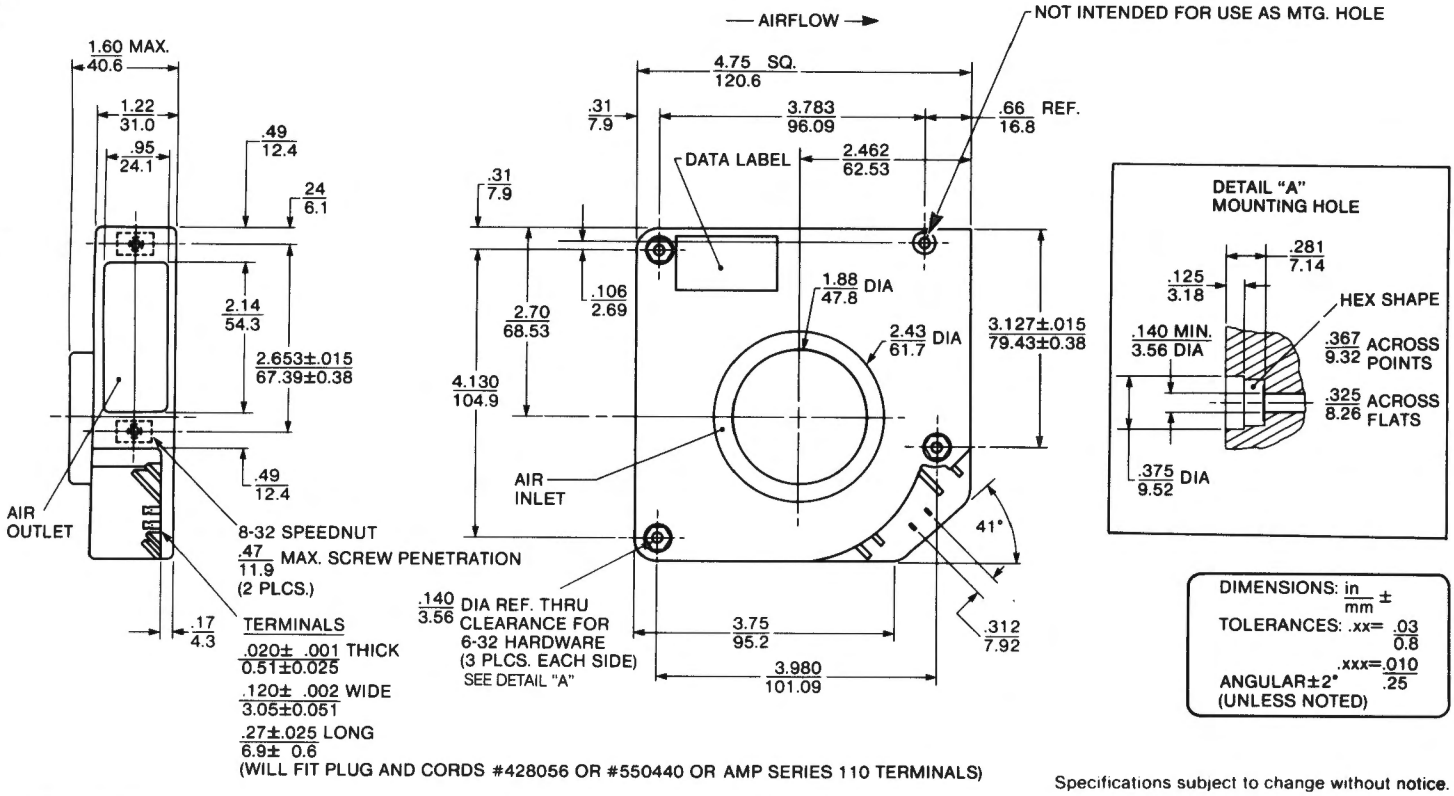

Specifications subject to change without notice.

MOTOR

Inside out shaded pole motor
Sintered bronze sleeve bearing or stainless steel ball bearings.
Class B insulation system.
100% dielectric tested at 1800 VAC/1 sec./500 microamps maximum leakage.
Built-in heat sink.
Impedance protected.

CONSTRUCTION

Housing - Glass filled polycarbonate, black, meeting UL94V-0 flammability rating.
Impeller - polypropylene, black, meeting UL94V-2 flammability rating.

OPTIONS

Capable of furnishing harness assemblies. See page 106.

ACOUSTIC RATINGS (for definitions see page 5)

		AIR FLOW		STATIC PRESSURE		PER INCE ANSI S12.11-1987			FREELY SUSPENDED @ 1 METER
Models	HZ	CFM	L/Sec	"w.g.	mm H_2O	PSIL dB	SPL dBA @ 3'	NEPL Bels 'A'	dBA
BT2A1 BT2B1	50	20	9.7	0	0	41.5	48.2	5.82	48.2
		16	7.6	.170	4.3	39.5	46.3	5.63	
BT3A1 BT3B1	60	22	10.4	0	0	43.8	50.5	6.05	49.6
		18.5	8.7	.220	5.6	42.3	49.4	5.94	

LIFE EXPECTANCY

The curve represents the continuous duty life of Biscuit blowers at a given temperature, after which 90% of the units will still be operating.

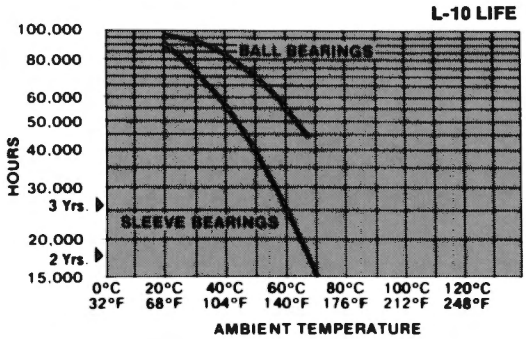

EXAMPLE: When run in 40°C ambient, 90% of sleeve bearing units will still be running after 55,000 hours continuous duty.

AC Fan Performance Sensor (FPS)

For Major and Patriot AC Fans

Thermal management of electronic packages is increasingly challenging as package sizes decrease and circuit complexities increase. In order to avoid critical internal temperature increases within the electronic system, it is necessary to make provisions for a continuous supply of cooling airflow by monitoring and remote warning of potential airflow interruption.

Comair Rotron supplies a variety of Fan Performance Sensor-equipped Major & Patriot AC fans which provide both monitoring and remote warning capabilities. Should cooling airflow be reduced or interrupted due to a drop in RPM, these FPS systems can trigger back-up cooling devices to go on line, or for less critical equipment, for system shutdown in order to avoid excessive internal temperature rise.

Two different types of Fan Performance Sensors are currently available for the Major & Patriot AC product line. All are designed around an electrically isolated pick-up coil which generates an AC signal with an amplitude proportional to the speed of the fan and the voltage applied to the fan. This output signal is then conditioned by additional electronic circuitry to yield a discrete pass or fail signal.

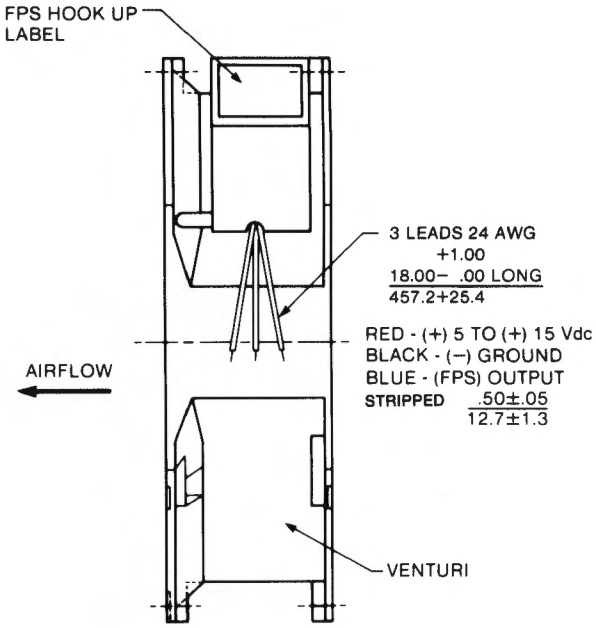

NOMENCLATURE FOR THE FPS

EXAMPLE: **PT2B3 Q D N**

OUTPUT — Q

DELAY FEATURES — D

LATCH FEATURES — N

OUTPUT

Q = Open Collector -- The signal is derived from the collector of the output transistor. The output is high on pass, low on fail. Downstream electronics can be tied between the supply voltage (V_{CC}) and output only.

T = TTL Compatible -- This is the same as an open collector output, but has an internal pull-up resistor tied between the supply voltage (V_{CC}) and the collector of the output transistor. The output signal is high on pass (logical 1) and low on failure (logical 0). Downstream electronics can be tied between the supply voltage (V_{cc}) and/or output and ground.

DELAY FEATURES

D = 10±4 second delay -- The failure signal is delayed approximately 10 seconds, thereby eliminating temporary or nuisance failure indication such as at fan start-up.

N = < 1 second delay

LATCH FEATURES

L = Latched -- Once the sensor outputs a failure signal, that signal is latched on even if the fan goes back into a pass condition. The latch is reset by interrupting the power to the FPS and the output load.

N = No Latch.

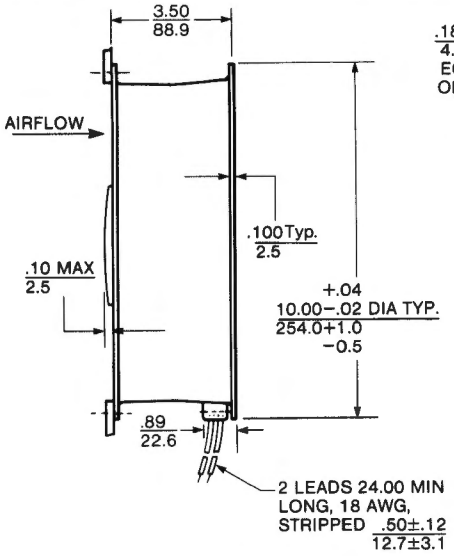

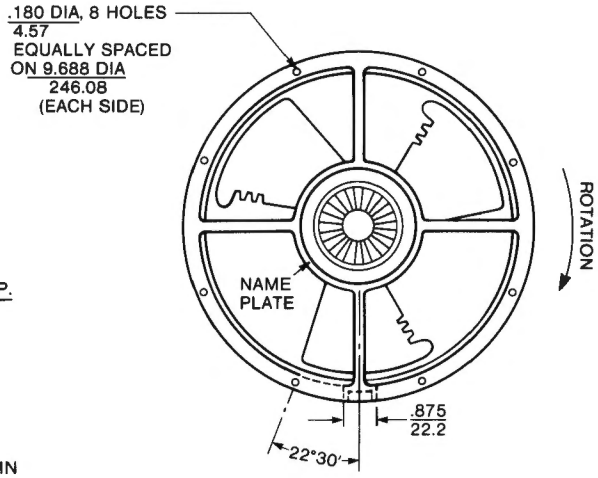

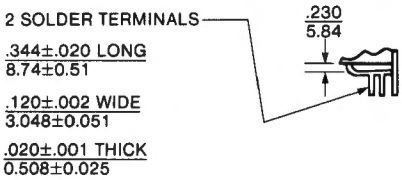

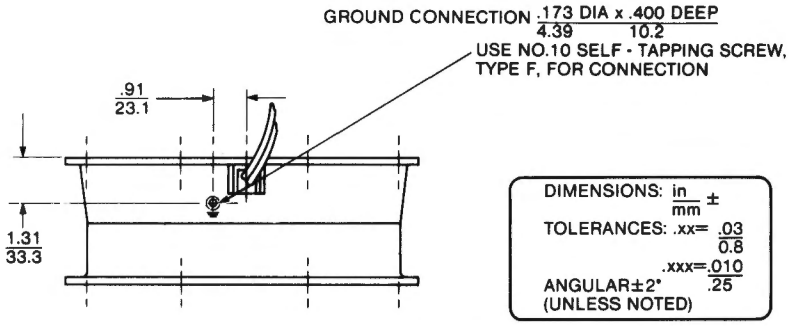

(WILL FIT PLUG & CORD #428056 OR 550440)

RECOMMENDED CUTOUT DIAMETER: 9.12±.06 / 231.6±1.5 DIA

Specifications subject to change without notice.

MOTOR

Shaded pole motor.
Class A insulation.
Automatic reset thermal protector.
Sealed ball bearings.
100% dielectric tested at 1800 VAC/1 sec./500 microamps maximum leakage.

CONSTRUCTION

Housing - single piece die cast aluminum, painted black.
Propeller and Terminal Block - Injection molded of flame retardant polycarbonate, black.

LIFE EXPECTANCY

The curve represents the continuous duty life of Caravel fans at a given temperature after which 90% of the units will still be operating.

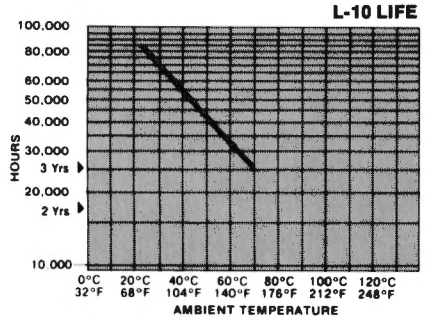

EXAMPLE: When run at 40°C ambient, 90% of units will still be running after 54,000 continuous hours.

ACOUSTIC RATINGS (for definitions see page 5)

		AIR FLOW		STATIC PRESSURE		PER INCE ANSI S12.11-1987			FREELY SUSPENDED @ 1 METER
Models	HZ	CFM	L/Sec	"w.g.	mm H_2O	PSIL dB	SPL dBA @ 3'	NEPL Bels 'A'	dBA
CL2L2 CL2T2	50	455	216.6	0	0	41.5	47.7	5.77	45.4
		273.1	128.8	.082	2.1	41.3	47.3	5.73	
CL3L2 CL3T2	60	550	255.8	0	0	45.4	50.8	6.08	49.2
		368.4	173.8	.095	2.4	44.9	50.4	6.04	

OPTIONS

Capable of furnishing:
Terminals or leadwires
Harness assemblies — See page 106.

BISCUIT® AC

BLOWER

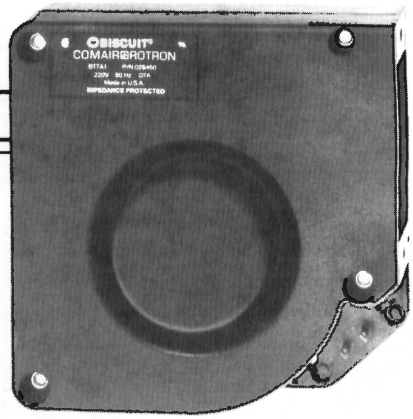

FEATURES

- ☐ Size - 4.75″ square x 1.56″ deep (120.6 mm x 39.6 mm)
- ☐ 22 CFM (10 L/Sec.)
- ☐ 115 VAC or 220/230 VAC, 1 phase, 50/60 Hz
- ☐ Low noise level
- ☐ Operating temperature range: −18°C to +60°C
- ☐ Weight - 18 oz. (.51 Kg)
- ☐ UL Yellow Card Recognized - File No. E31293
- ☐ CSA Certified - File No. LR52898

PERFORMANCE

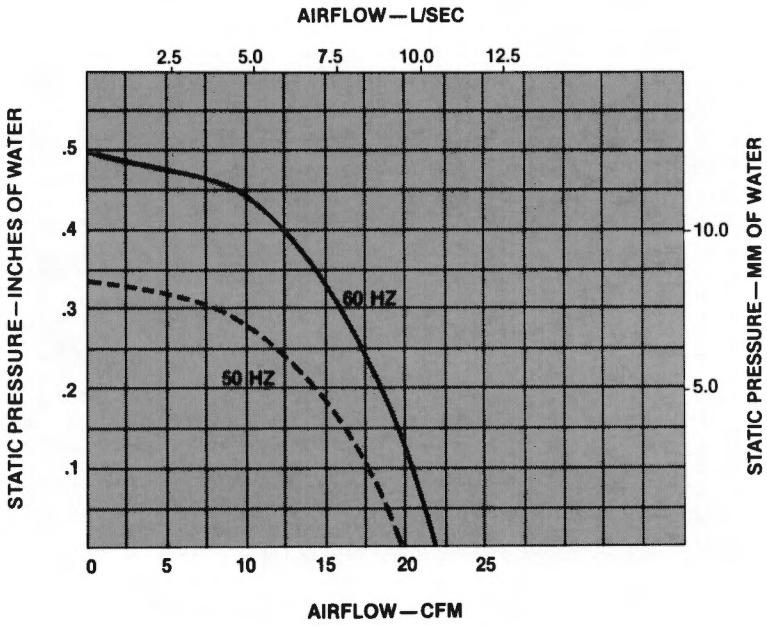

SPECIFICATIONS

Model No.	Part No.	Bearing	Volts	Hz	Watts	Line Amps	Locked Rotor Amps	RPM	CFM	L/Sec.
*BT2A1	028448	Sleeve	115	50/60	17/16	.19/.17	.22/.20	2500/2700	20/22	9.4/10
*BT2B1	028454	Ball	115	50/60	17/16	.19/.17	.22/.20	2520/2700	20/22	9.4/10
*BT3A1	028449	Sleeve	220/230	50/60	15/14	.09/.08	.11/.10	2500/2700	20/22	9.4/10
BT3B1	028732	Ball	200/230	50/60	15/14	.09/.08	.11/.10	2500/2700	20/22	9.4/10

*Distributor Item.

All figures are nominal free delivery values at sea level.

TYPICAL FPS APPLICATION EXAMPLE

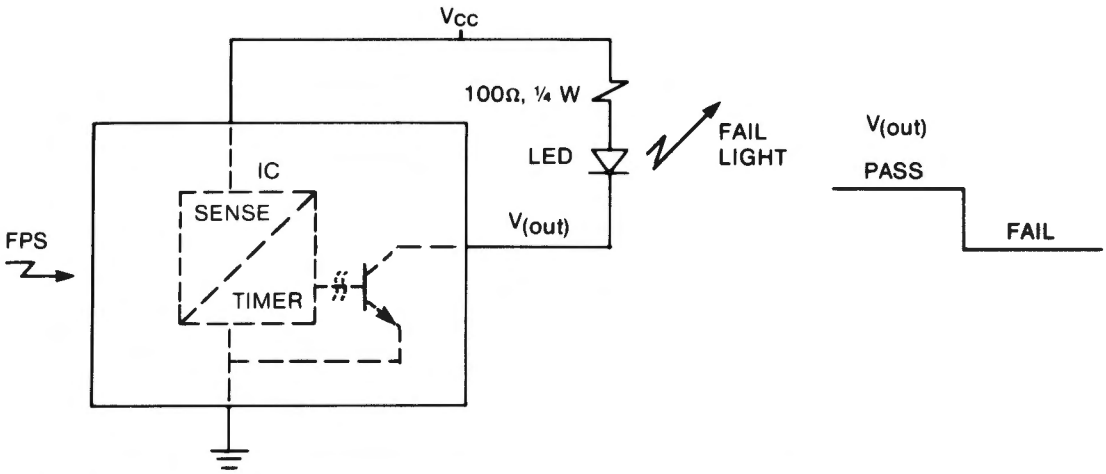

CIRCUIT DESIGN

This circuit (above) utilizes the open collector output option with delay feature (10±4 seconds) and latch feature. The output signal is used to power one LED labelled to indicate failure. Failure indication is determined as a fan sees the equivalent of 80 VAC, 60 Hz. Rotational speed less than this nominal value may be caused by a reduced applied voltage to the fan, a physical obstruction impeding fan rotation or failure of the motor or bearing.

CIRCUIT OPERATION

The red FPS lead is applied to the FPS power source (+5 to +15 Vdc), the black FPS lead to ground, and the blue output lead as shown in the above schematic. Power is applied to the fan, which will start and reach full rotational speed (3350 RPM) in five to ten seconds. The delay feature specified in this example will not allow a failure indication on start-up unless the fan fails to reach the specified minimum operating point (80 VAC, 60 Hz.) within ten seconds. If the delay option had not been specified, the failure indicator would have been lit until the fan reached minimum operating level.

Should a failure occur or fan rotational speed drop below the minimum for more than ten seconds, the failure indicator would be illuminated. Should the fan then speed up above the minimum level the failure indicator would remain on. The latch feature maintains the failure indication until a system operator resets the FPS. The FPS is reset by interrupting the FPS supply voltage and output laod for more than 40 milliseconds. An advantage of this FPS design is the continual fan status indication. Because of the latch feature chosen in this example, the user need not constantly monitor the pass/fail LED indicators in order to determine if a failure has occurred.

SPECIFICATIONS

PARAMETER	CONDITIONS	Open Collector (Output)	TTL (Output)
Input Voltage Requirements		5–15Vdc	
Supply Current (Quiescent)	V_{cc}=5Vdc	15 mA MAX	
	V_{cc}=15Vdc	30 mA MAX	
Inrush Current	V_{cc}=5Vdc	50 mA MAX	
Temperature	Non-Operating (Storage)	−28°C TO +70°C	
	Operating	0°C TO +60°C	
Alarm Signal	No Delay	<1 SEC	
	Delay	10 ± 4 SEC	
Alarm Set Point	115 V, 60 Hz	80±10 VAC	
	115 V, 50 Hz	70±15 VAC	
	230 V, 60 Hz	165±10 VAC	
	230 V, 50 Hz	155±15 VAC	
V_c Collector-Emitter	MAX	28 Vdc	
I_c Continuous Collector Current	MAX	100 mA	
V_{ce} (SAT) Collector Emitter SAT. Voltage	I_c=10mA I_c=100mA	100 mV(TYP) 200 mV(TYP)	
Pull-Up Resistance V_{cc} To Collector			1K Ω

NOTES:
1. Specifications presently cover FPS used on 115V or 230V full speed (2 pole) design only. For information on half speed (4 pole) design, contact factory.
2. Sample discussed above mentions voltages that only pertain to 115V models.

MODULAIR® MB 100 AC

CABINET BLOWER

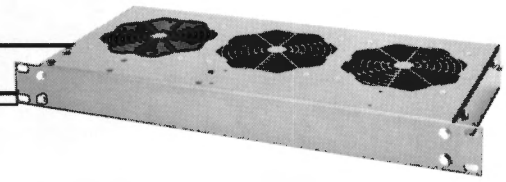

FEATURES

- ☐ 300 CFM (142 L/Sec.)
- ☐ Performance of Rotron's Muffin® fans
- ☐ Fits EIA 19″ rack cabinets
- ☐ Now available in 230 VAC; 12, 24, 48 VDC; reverse flow; and slow speed versions

PERFORMANCE

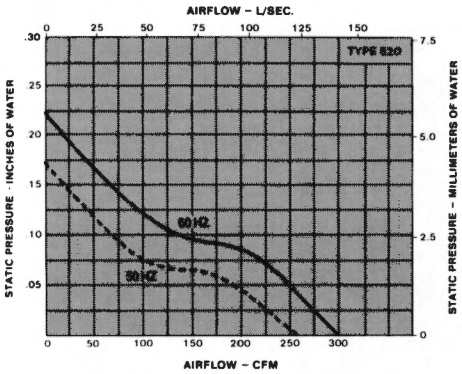

ACOUSTIC RATINGS (for definitions see page 5)

		AIR FLOW		STATIC PRESSURE		PER INCE ANSI S12.11-1987			FREELY SUSPENDED @ 1 METER
Models	HZ	CFM	L/Sec	"w.g.	mm H_2O	PSIL dB	SPL dBA @ 3'	NEPL Bels 'A'	dBA
TYPE	50	250	118.0	0	0	43.5	49.0	5.90	48.2
320	60	300	141.6	0	0	46.9	52.3	6.23	51.5

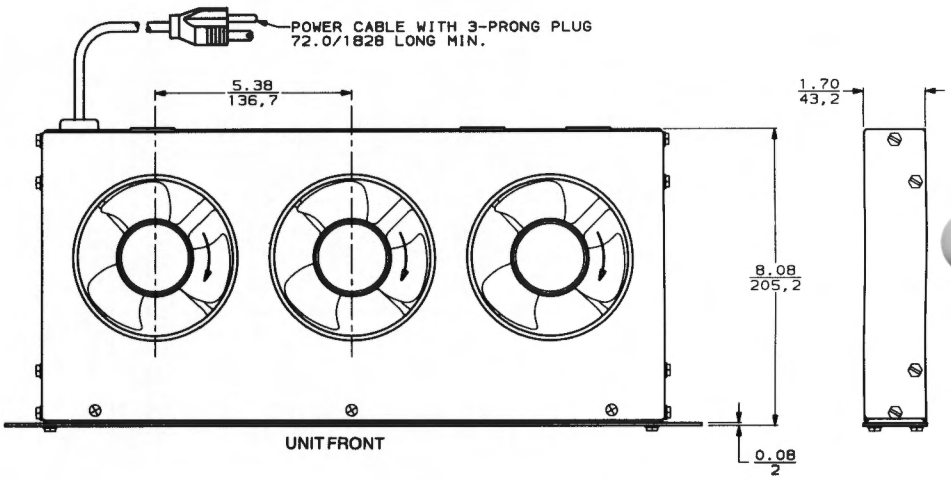

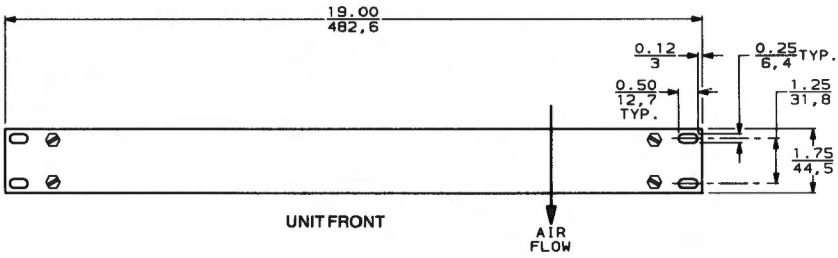

SPECIFICATIONS

Type	Part No.	No. Fans	Bearing	Weight lb. (Kg)	Volts	Hz	Watts	Line Amps	RPM	CFM	L/Sec.
*320	031038	3	Sleeve	9.0(4.3)	115	50/60	54/44	.60/.54	2700/3100	250/300	118/142

* Distributor Item.

All figures are nominal free delivery values at sea level.

MODULAIR® MB 1000 AC

CABINET BLOWER

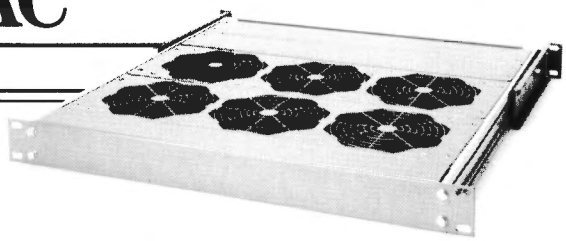

FEATURES

- ☐ 300, 600, to 900 CFM (142, 283 or 425 L/Sec.)
- ☐ Performance of Rotron's Muffin® fans
- ☐ Each 3-fan strip may be mounted in any of these locations
- ☐ Fits EIA 19″ rack cabinets
- ☐ Now available in 230 VAC; 12, 24, 48 VDC; reverse flow; and slow speed versions

PERFORMANCE

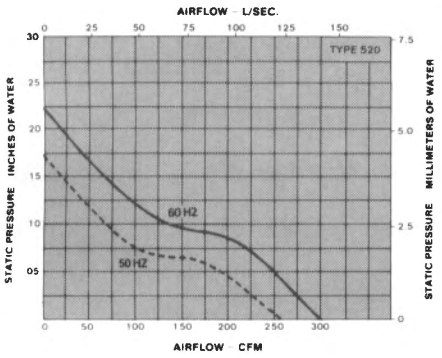

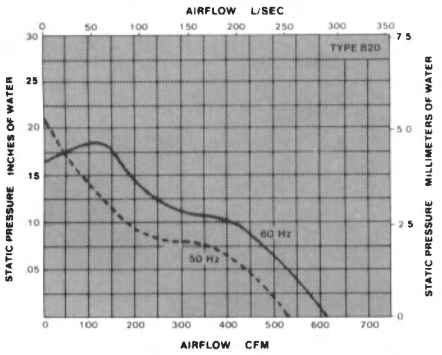

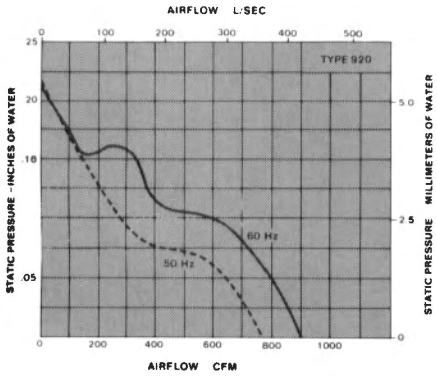

ACOUSTIC RATINGS (for definitions see page 5)

		AIR FLOW		STATIC PRESSURE		PER INCE ANSI S12.11-1967			FREELY SUSPENDED @ 1 METER
Models	HZ	CFM	L/Sec	"w.g.	mm H_2O	PSIL dB	SPL dBA @ 3'	NEPL Bels 'A'	dBA
TYPE 520	50	250	118.0	0	0	43.5	49.0	5.90	48.2
	60	300	141.6	0	0	46.9	52.3	6.23	51.5
TYPE 820	50	525	247.8	0	0	45.6	50.9	6.09	50.1
	60	600	283.2	0	0	49.2	54.4	6.44	53.6
TYPE 920	50	775	365.8	0	0	47.1	52.7	6.27	51.9
	60	900	424.8	0	0	50.7	56.1	6.61	55.3

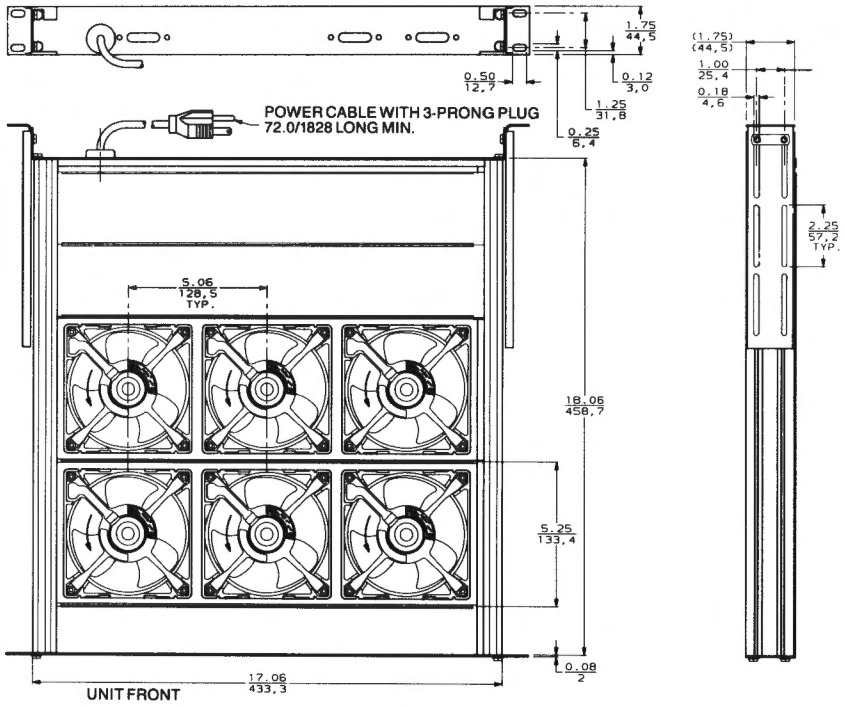

FAN LOCATIONS	REAR TRAY	MIDDLE TRAY	FRONT TRAY
TYPE 520	3 FANS	NONE	NONE
TYPE 820	3 FANS	3 FANS	NONE
TYPE 920	3 FANS	3 FANS	3 FANS

SPECIFICATIONS

Type	Part No.	No. Fans	Bearing	Weight lb. (Kg)	Volts	Hz	Watts	Line Amps	RPM	CFM	L/Sec.
*520	036368	3	Sleeve	8(3.6)	115	50/60	54/44	.60/.54	2700/3100	250/300	118/142
*820	036367	6	Sleeve	10(4.5)	115	50/60	108/87	1.2/1.1	2700/3100	530/600	250/283
*920	036366	9	Sleeve	13(5.9)	115	50/60	162/130	1.8/1.6	2700/3100	800/900	378/425

* Distributor Item.

All figures are nominal free delivery values at sea level.

MODULAIR® MB 5100 AC

CABINET BLOWER

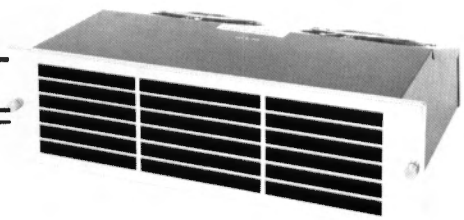

FEATURES

- ☐ 320 CFM (151 L/Sec.)
- ☐ Performance of two Feather® fans
- ☐ Six years continuous duty at 25°C
- ☐ Fits EIA 19″ rack cabinets
- ☐ Weight 13 lb. (5.9 Kg)

PERFORMANCE

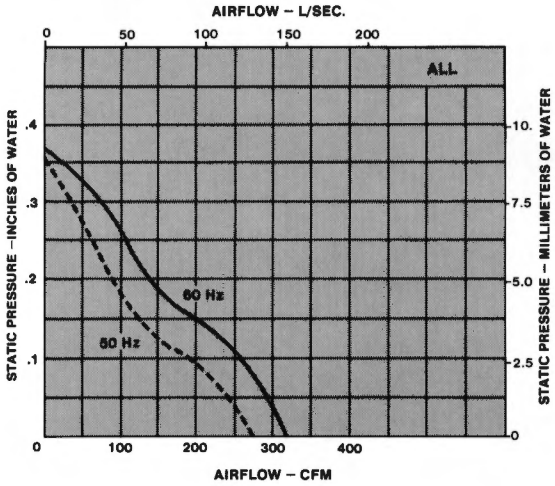

ACOUSTIC RATINGS (for definitions see page 5)

		AIR FLOW		STATIC PRESSURE		PER INCE ANSI S12.11-1987			FREELY SUSPENDED @ 1 METER
Models	HZ	CFM	L/Sec	"w.g.	mm H_2O	PSIL dB	SPL dBA @ 3'	NEPL Bels 'A'	dBA
ALL	50	275	129.8	0	0	50.9	55.8	6.58	54.2
		200	94.4	0.09	2.29	49.6	54.9	6.49	
	60	320	151.0	0	0	54.5	59.5	6.95	57.5
		250	118.0	0.125	3.18	52.5	58.4	6.84	

OPTIONS

Available with Patriot Fans - Model MB5200
For information regarding non-standard designs, consult Application Engineering Department.

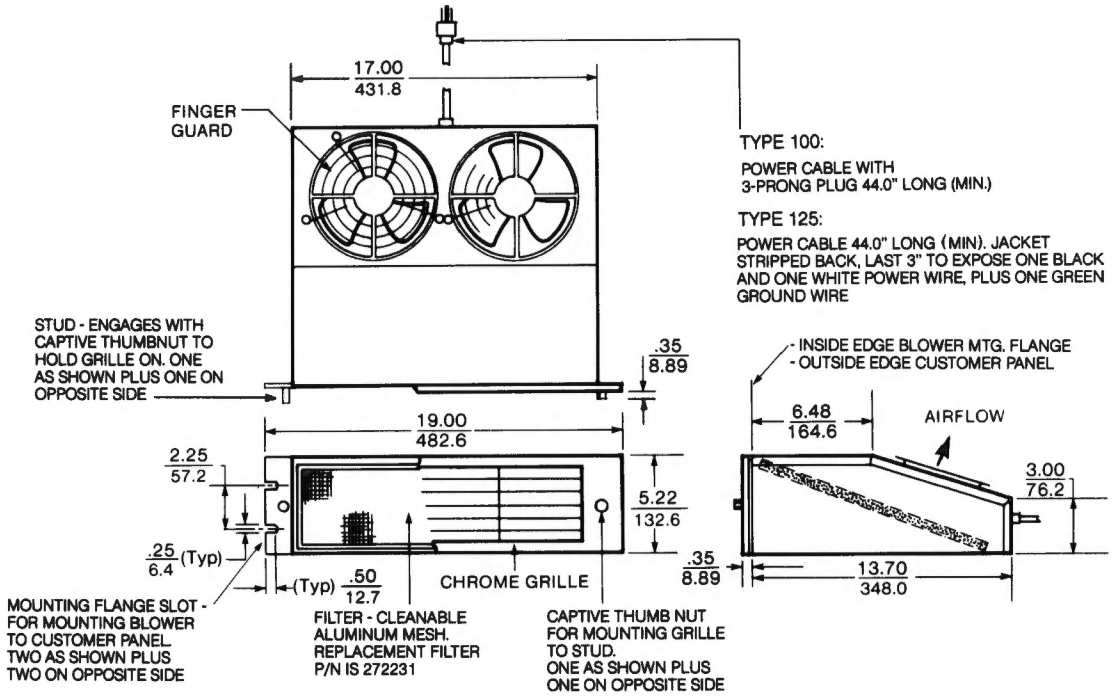

SPECIFICATIONS

Type	Part No.	No. Fans	Bearing	Volts	Hz	Watts	Line Amps	RPM	CFM	L/Sec.
*100	020099	2	Ball	115	50/60	44/44	.40/.40	2830/3350	275/320	130/151
*125	020100	2	Ball	220/230	50/60	44/44	.19/.19	2830/3350	275/320	130/151

* Distributor Item.

All figures are nominal free values at sea level.

MODULAIR® MB 9100 AC

CABINET BLOWER

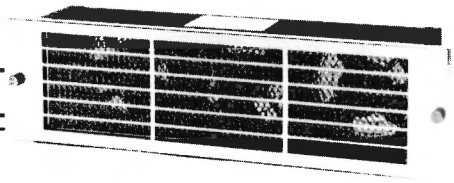

FEATURES

- ☐ 235 CFM (110 L/Sec.)
- ☐ Performance of three Muffin® fans
- ☐ Ten years continuous duty at 25°C
- ☐ Fits E1A 19″ rack cabinets
- ☐ Weight - 8 lbs. (3.6 Kg.)

PERFORMANCE

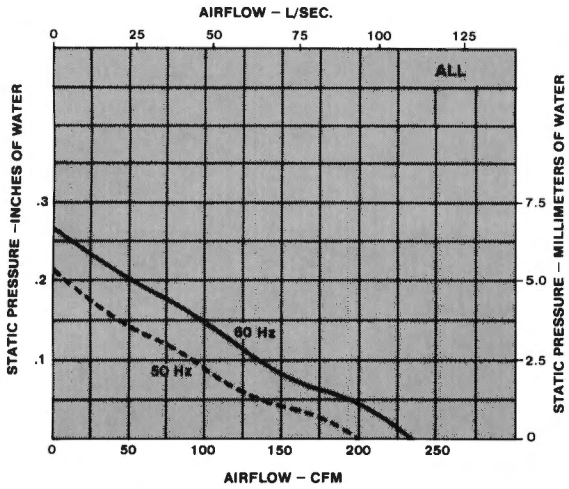

ACOUSTIC RATINGS (for definitions see page 5)

		AIR FLOW		STATIC PRESSURE		PER INCE ANSI S12.11-1987			FREELY SUSPENDED @ 1 METER
Models	HZ	CFM	L/Sec	"w.g.	mm H_2O	PSIL dB	SPL dBA @ 3'	NEPL Bels 'A'	dBA
ALL	50	200	94.4	0	0	45.6	52.6	6.26	47.9
		100	47.2	0.08	2.03	45.5	51.4	6.14	
	60	235	110.9	0	0	49.1	54.2	6.42	51.1
		137	64.7	0.079	2.01	52.3	56.1	6.61	

OPTIONS

For information regarding non-standard designs, consult Application Engineering Department.

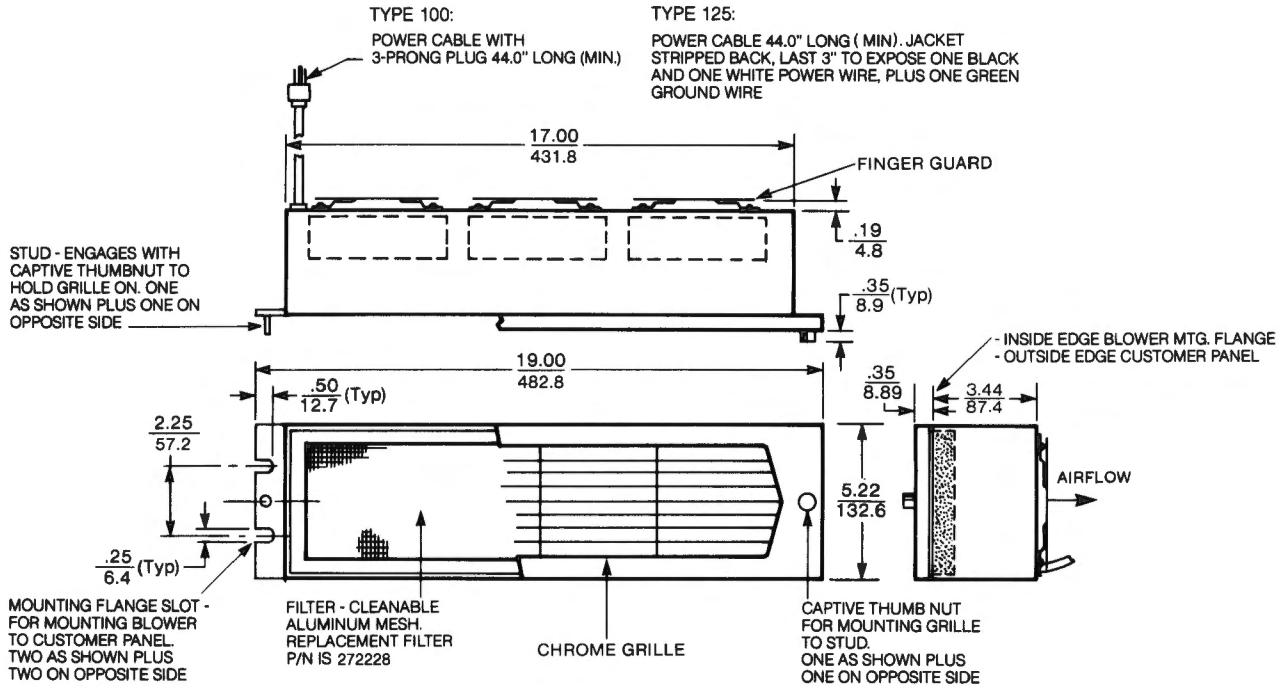

SPECIFICATIONS

Type	Part No.	No. Fans	Bearing	Volts	Hz	Line Watts	Amps	RPM	CFM	L/Sec.
*100	024475	3	Sleeve	115	50/60	54/44	.66/.54	2700/3100	200/235	95/110
*125	024476	3	Sleeve	220/230	50/60	54/44	.35/.30	2700/3100	200/235	95/110

* Distributor Item.

All figures are nominal free values at sea level.

MODULAIR® MB 9200 AC

CABINET BLOWER

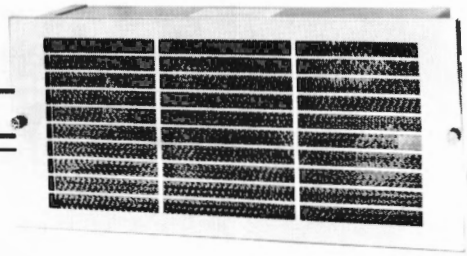

FEATURES

- ☐ 370 CFM (175 L/Sec.)
- ☐ Performance of two Feather® fans
- ☐ Six years continuous duty at 25°C
- ☐ Fits EIA 19″ rack cabinets
- ☐ Weight - 9 lbs. (4.1 Kg.)

PERFORMANCE

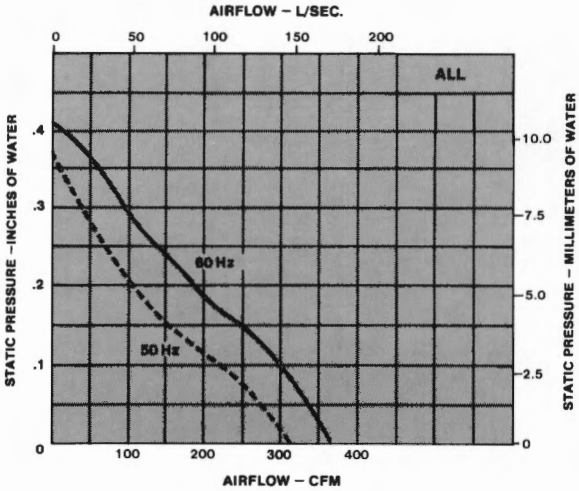

ACOUSTIC RATINGS (for definitions see page 5)

		AIR FLOW		STATIC PRESSURE		PER INCE ANSI S12.11-1987			FREELY SUSPENDED @ 1 METER
Models	HZ	CFM	L/Sec	"w.g.	mm H_2O	PSIL dB	SPL dBA @ 3'	NEPL Bels 'A'	dBA
ALL	50	310	146.3	0	0	48.1	53.8	6.38	51.2
		235	110.9	0.09	2.29	47.6	53.5	6.35	
	60	370	174.6	0	0	51.8	57.8	6.78	54.7
		270	127.4	0.13	3.30	51.4	57.8	6.78	

OPTIONS

For information regarding non-standard designs, consult Application Engineering Department.

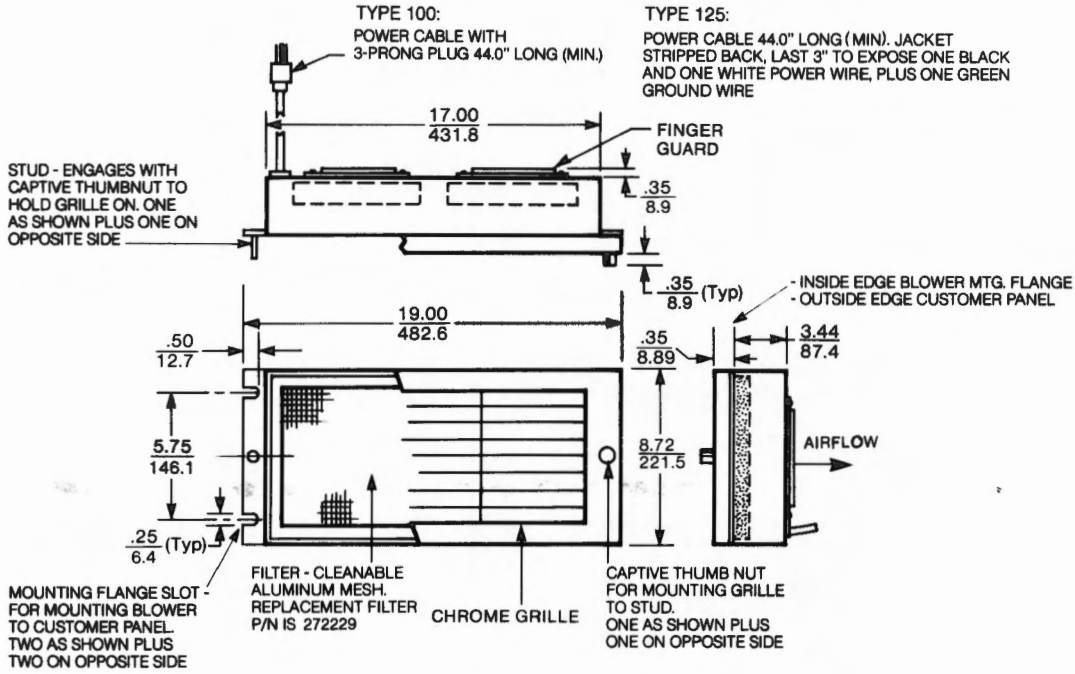

SPECIFICATIONS

Type	Part No.	No. Fan	Bearing	Volts	Hz	Line Watts	Amps	RPM	CFM	L/Sec.
*100	024488	2	Ball	115	50/60	44/44	.40/.40	2830/3350	310/370	146/175
*125	024489	2	Ball	220/230	50/60	44/44	.19/.19	2830/3350	310/370	146/175

* Distributor Item.

All figures are nominal free delivery values at sea level.

MODULAIR® MB 9300 AC

CABINET BLOWER

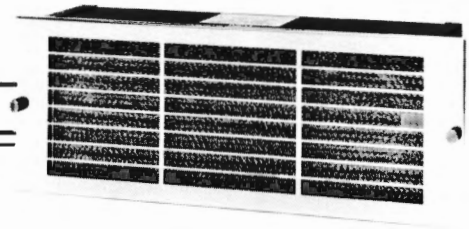

FEATURES

- ☐ 350 CFM (165 L/Sec.)
- ☐ Performance of two Major® fans
- ☐ Five years continuous duty at 25°C
- ☐ Fits EIA 19" rack cabinets
- ☐ Weight - 9.5 lbs. (4.3 Kg.)

PERFORMANCE

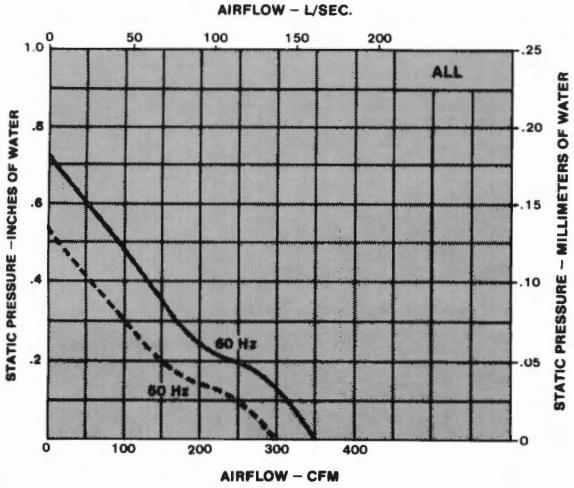

ACOUSTIC RATINGS (for definitions see page 5)

		AIR FLOW		STATIC PRESSURE		PER INCE ANSI S12.11-1987			FREELY SUSPENDED @ 1 METER
Models	HZ	CFM	L/Sec	"w.g.	mm H_2O	PSIL dB	SPL dBA @ 3'	NEPL Bels 'A'	dBA
ALL	50	300	141.6	0	0	51.1	57.8	6.78	54.9
		230	108.6	0.12	3.05	51.8	57.8	6.78	
	60	350	165.2	0	0	56.2	61.6	7.16	58.6
		280	132.2	0.16	4.06	54.8	61.1	7.11	

OPTIONS

For information regarding non-standard designs, consult Application Engineering Department.
Available with Patriot Fans - Model MB9400

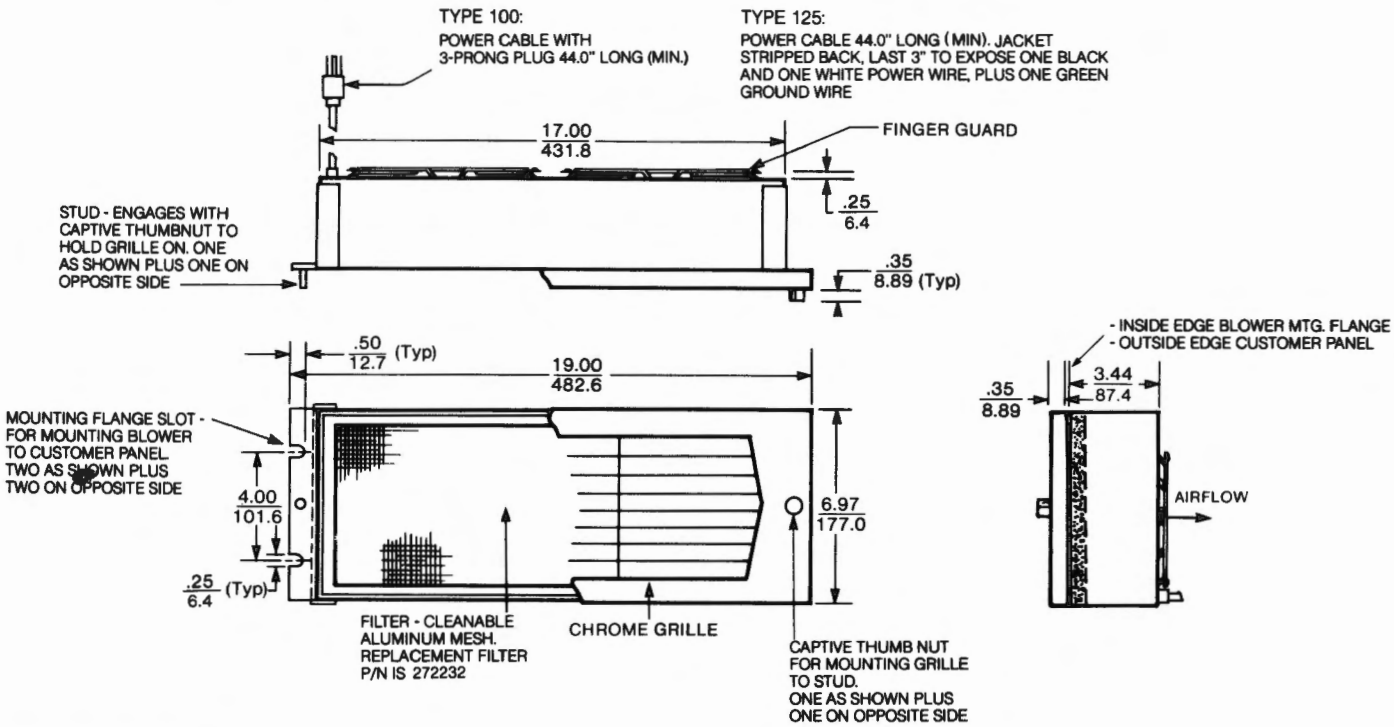

SPECIFICATIONS

Type	Part No.	No. Fan	Bearing	Volts	Hz	Watts	Line Amps	RPM	CFM	L/Sec.
*100	027384	2	Ball	115	50/60	68/68	.64/.54	2850/3350	300/350	142/165
*125	029069	2	Ball	220/230	50/60	68/68	.35/.30	2850/3350	300/350	142/165

*Distributor Item

All figures are nominal free values at sea level.

NOTES

ACCESSORY GUIDE

	PART NO	FLIGHT II 60	FLIGHT II 80	SPRINT DC	SPRITE DC	FLIGHT II 90	FLIGHT II 120	MUFFIN DC	WHISPER XL DC	MUFFIN XL DC	GALAXY DC	MAJOR DC	PATRIOT DC	BISCUIT DC	SPRITE	WHISPER	WHISPER XL	MUFFIN	MUFFIN XL	MAJOR	PATRIOT	FEATHER	CARAVEL	TARZAN	BISCUIT	MB5100	MB9100	MB9200	MB9300
FILTERS																													
Replacement Filter	272228																											●	
Replacement Filter	272229																												●
Replacement Filter	272231																									●			
Replacement Filter	272232																												●
Filter Assembly	477712																●		●										
Filter Assembly	551590								●	●							●	●	●	●									
Filter Guard Assembly (30 PPI)	557239	●																											
Filter Guard Assembly (45 PPI)	557240	●																											
Filter Guard Assembly (30 PPI)	554141		●	●	●											●													
Filter Guard Assembly (45 PPI)	554142		●	●	●											●													
Filter Guard Assembly (30 PPI)	557218					●																							
Filter Guard Assembly (45 PPI)	557219					●																							
Filter Guard Assembly (30 PPI)	554148						●	●	●	●							●	●	●	●									
Filter Guard Assembly (45 PPI)	554149						●	●	●	●							●	●	●	●									
GRILLES & GUARDS																													
Grille (Spiral)	476015																●		●										
Grille (Expanded Metal)	477727																●		●										
Grille Assembly	478031																●		●										
Screen Guard	550214						●	●	●	●							●	●	●	●									
FINGER GUARDS																													
Finger Guard (Metal)	476042						●	●	●	●							●	●	●	●									
Finger Guard (Metal)	476136																							●					
Finger Guard (Metal)	476143		●	●	●											●													
Finger Guard (Metal)	476323																						●						
Finger Guard (Metal) Rim Mount	476646																					●							
Finger Guard (Metal) Panel Mount	476651																					●							
Finger Guard (Metal)	477626														●										●				
Finger Guard (Metal)	550272											●									●								
Finger Guard (Plastic)	550481						●	●	●	●							●	●	●	●									
Finger Guard (Plastic)	550648		●	●	●											●													
Finger Guard (Plastic)	551147						●	●	●	●							●	●	●	●									
Finger Guard (Plastic)	550651										●																		
Finger Guard (Metal)	551199												●									●							
Finger Guard (Metal)	552934						●	●	●	●							●	●	●	●									
Finger Guard (Metal)	554172					●																							
Finger Guard (Metal)	572621	●																											
Finger Guard (Metal)	557216										●																		
MOUNTING CLIPS																													
Mounting Clips (Bag of 3)	476154																					●							
#6-32 Flush Mounting Clips	477663											●	●				●		●		●	●							
#6-32 Standoff Mounting Clips	477670											●	●				●		●		●	●							
#6-32 Mounting Clips	550113								●	●	●							●		●									
Mounting Clips (Filter/Grille Assembly)	271016																●		●										
PLUG & CORD SETS																													
Straight On Plug and Cord	428023																					●							
Right Angle Plug and Cord	428056															●	●	●	●	●	●	●		●	●	●			
Straight On Plug and Cord	550440															●		●		●	●	●		●	●	●			
Polarized Right Angle Plug and Cord	571064				●				●	●	●																		

ACCESSORIES

ACCESSORIES

Filter Assembly (Whisper XL DC, Muffin XL DC, Whisper, Whisper XL, Muffin, Muffin XL)
Part No. 551590

Consists of:
551463 Filter Frame
551494 Filter Element
551453 Mounting Brackets

Recommended cut-out 5.5" x 5.16"

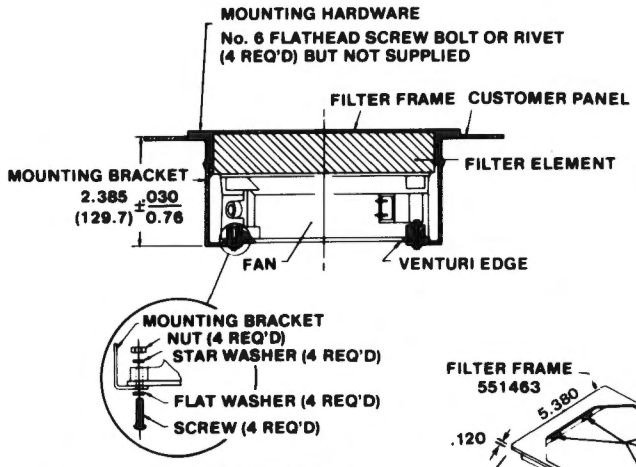

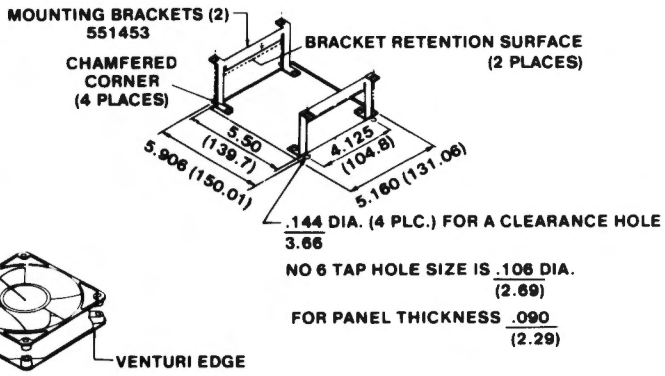

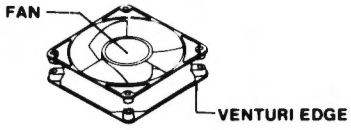

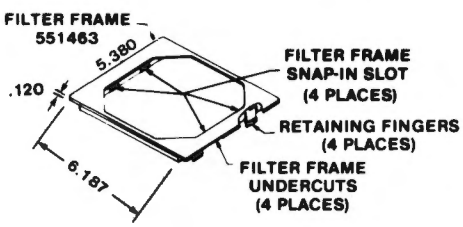

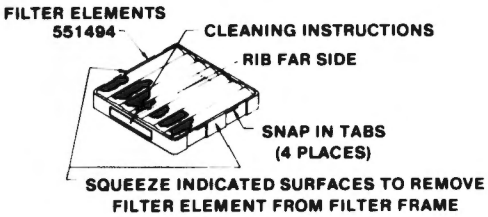

Note: Filters reduce airflow; i.e. a MX2A3's airflow would be reduced to about 87 CFM with P/N 551590 on fan's inlet at 115VAC, 60 Hz.

TOLERANCE: ± .015 (0.38) ON ALL LINEAR DIMENSIONS

Filter Guard Assemby (Flight 60)
Part No. 557239

30 PPI* Replacement Filter Element
Part No. 557241 (pack of 5)
Also available with 45 PPI Filter
Part No. 557240
45 PPI Replacement Filter Element
Part No. 557242 (pack of 5)
Retainer and guard UL94V-0 plastic
Filter element (media) polyurethane foam

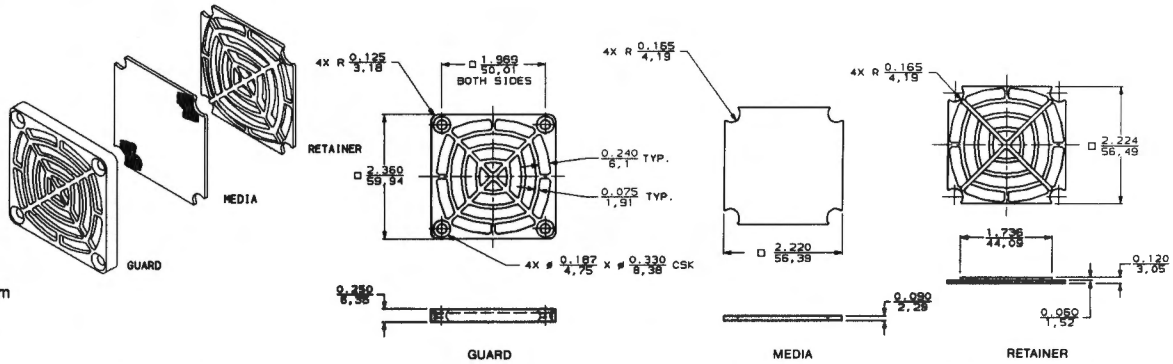

Note: Filters reduce airflow
* PPI denotes "pores per inch"

TOLERANCE B (see page 105)

Filter Guard Assembly (Flight 80, Sprint DC, Sprite DC, Sprite)
Part No. 554141

30 PPI* Replacement Filter Element
Part No. 554139 (Pack of 5)
Also available with 45 PPI Filter
Part No. 554142
45 PPI Replacement Filter Element
Part No. 554140 (Pack of 5)
Retainer and guard UL94V-0 plastic
Replacement filter element (media)
polyurethane foam

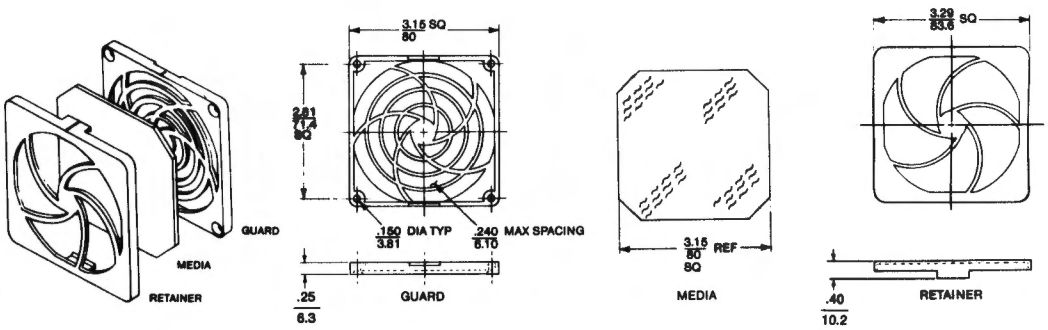

Note: Filters reduce airflow; i.e. a ST12A3's airflow would be reduced to about 25 CFM with P/N 554141 on fan's inlet at 12VDC.
***PPI denotes "pores per inch"**

TOLERANCE B (see page 105)

Filter Guard Assembly (Flight 90)
Part No. 557218

30 PPI* Replacement Filter Element
Part No. 557220 (pack of 5)
Also available with 45 PPI Filter
Part No. 557219
45 PPI Replacement Filter Element
Part No. 557221 (pack of 5)
Retainer and guard UL94V-0 plastic
Filter element (media) polyurethane foam

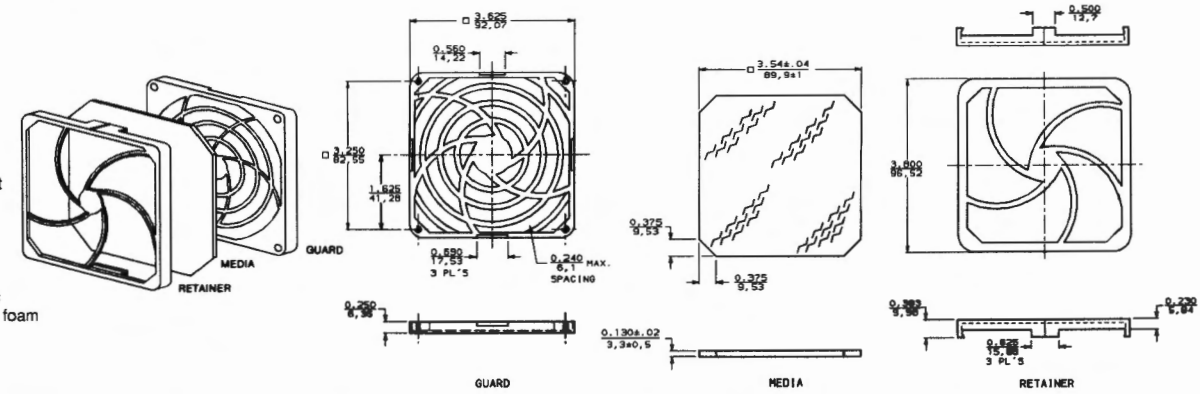

Note: Filters reduce airflow
* PPI denotes "pores per inch"

TOLERANCE B (see page 105)

Filter Guard Assembly (Flight 120, Muffin DC, Whisper XL DC, Muffin XL DC, Whisper, Whisper XL, Muffin, Muffin XL)
Part No. 554148

30 PPI * Replacement Filter Element
Part No. 554146 (Pack of 5)
Also available with 45 PPI Filter
Part No. 554149
45 PPI Replacement Filter Element
Part No. 554147 (Pack of 5)
Retainer and guard UL94V-0 plastic
Replacement filter element (media)
polyurethane foam

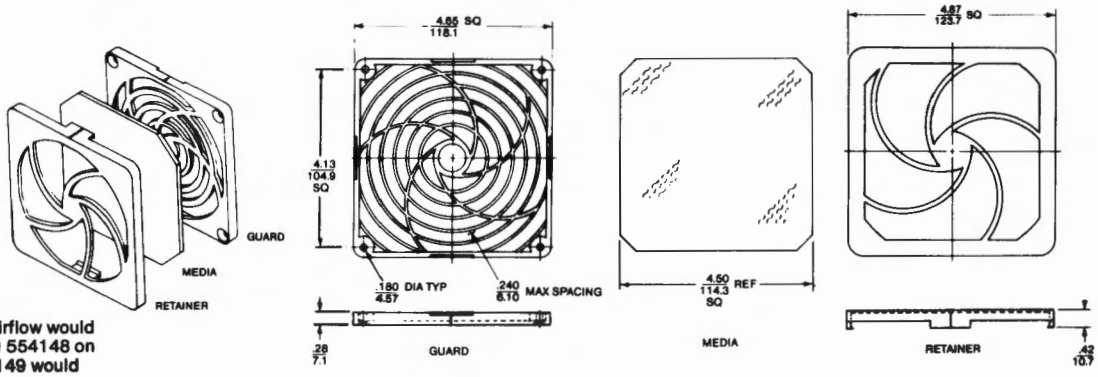

Note: Filters reduce airflow; i.e. a MX2A3's airflow would be reduced to about 75 CFM with P/N 554148 on fan's inlet at 115VAC, 60 Hz. P/N 554149 would reduce airflow to about 68 CFM.
*PPI denotes "pores per inch"

TOLERANCE B (see page 105)

Filter Assembly (Whisper, Muffin)
Part No. 477712
Consists of:
476000 Filter Frame
271018 Washable Filter Element
271016 Mounting Clip (2)
Installation Instructions

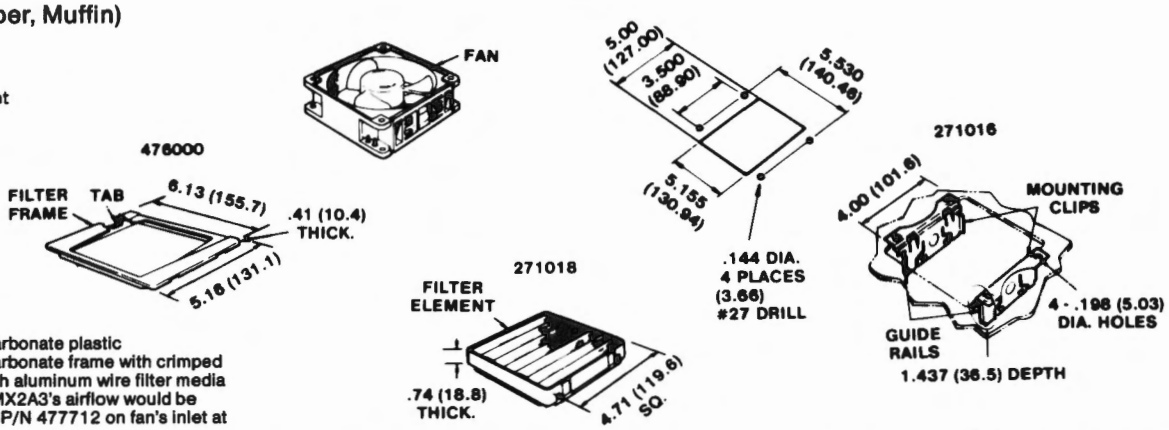

Materials: 476000 Black polycarbonate plastic
271018 Black polycarbonate frame with crimped 18 x 14 mesh aluminum wire filter media
Note: Filters reduce airflow; i.e. MX2A3's airflow would be reduced into about 82 CFM with P/N 477712 on fan's inlet at 115VAC, 60 Hz (UP).

TOLERANCE A (see page 105)

Grille Kit (Whisper, Muffin)
Part No. 478031
Consists of:
476015 Grille (Spiral)
271016 Mounting Clip (2)
Installation Instructions

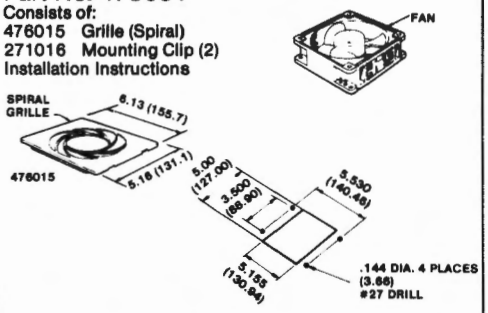

Materials: Grille—High Impact Polycarbonate Plastic
Clips—.020 (0.5) Thick Spring Steel, black phosphate finish

TOLERANCE: ±.015 (0.38) ON ALL LINEAR DIMENSIONS

Metal Grille (Whisper, Muffin)
Part No. 477727
Expanded aluminum mesh - snaps onto fan venturi with use of Part No. 271016 mounting clips. (2 REQ'D)

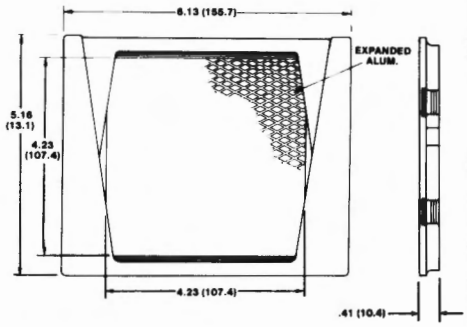

TOLERANCE A (see page 105)

Screen Guard (Flight 120, Muffin DC, Whisper XL DC, Muffin XL DC, Whisper, Whisper XL, Muffin, Muffin XL)
Part No. 550214

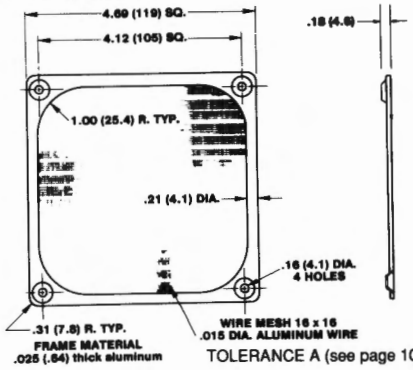

TOLERANCE A (see page 105)

Finger Guard (Flight 60)
Part No. 572621
Steel wire, .062 dia., welded and nickel chrome finish
meets UL, CSA .250/6.35 spacing

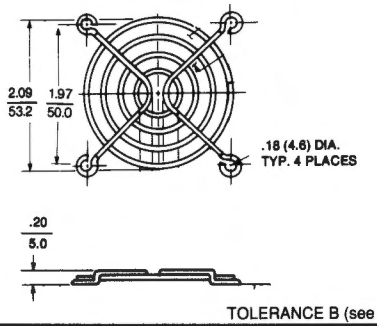

TOLERANCE B (see page 105)

Finger Guard (Flight 80, Sprint DC, Sprite DC, Sprite)
Part No. 476143

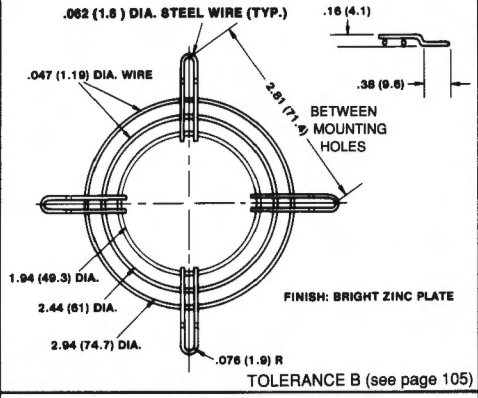

TOLERANCE B (see page 105)

Finger Guard (Flight 80, Sprint DC, Sprite DC, Sprite)
Part No. 550648
Meets UL, CSA .250/6.35 spacing

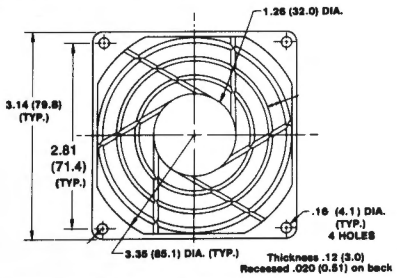

Material: Fiberite RTP 305 glass reinforced polycarbonate or GE Valox 420 polyester rated UL94V-0

Color: Black

TOLERANCE A (see page 105)

Finger Guard (Flight 90)
Part No. 554172
Steel wire, .062 dia., welded and nickel chrome finish
Meets UL, CSA .250/6.35 spacing

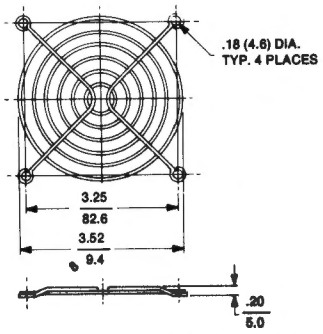

TOLERANCE B (see page 105)

Finger Guard (Flight 120, Muffin DC, Whisper XL DC, Muffin XL DC, Whisper, Whisper XL, Muffin, Muffin XL, Skeleton)
Part No. 551147
Meets UL, CSA .250/6.35 spacing

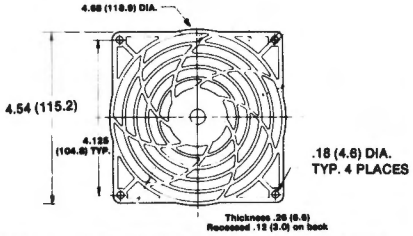

Material: Fiberite RTP 305 glass reinforced polycarbonate or GE Valox 420 polyester rated UL94V-0

Color: Black

TOLERANCE A (see page 105)

Finger Guard (Flight 120, Muffin DC, Whisper XL DC, Muffin XL DC, Whisper, Whisper XL, Muffin, Muffin XL, Skeleton)
Part No. 476042
Steel wire, welded and bright zinc plated

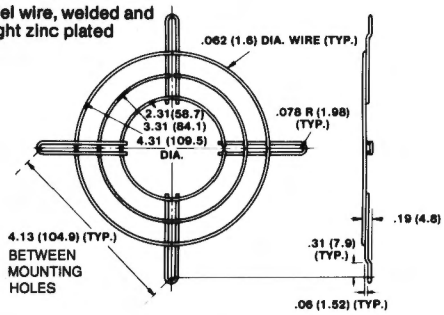

TOLERANCE B (see page 105)

Finger Guard (Flight 120, Muffin DC, Whisper XL DC, Muffin XL DC, Whisper, Whisper XL, Muffin, Muffin XL, Skeleton)
Part No. 550481
Meets UL, CSA .250/6.35 spacing

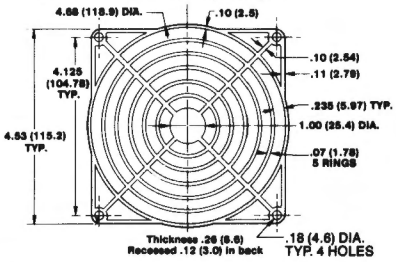

Material: Lexan 500 glass reinforced polycarbonate rated UL94V-0

Color: Black

TOLERANCE A (see page 105)

Finger Guard (Flight 120, Muffin DC, Whisper XL DC, Muffin XL DC, Whisper, Whisper XL, Muffin, Muffin XL, Skeleton)
Part No. 552934 Meets UL, CSA .250/6.35 spacing

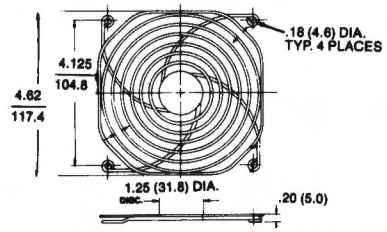

Material: Center Disc: .03 (0.76) THK. C.R.S.
Wire Rings: .062 (1.57) DIA. STEEL
Supports: .080 (2.03) DIA. STEEL
Finish: Bright Zinc Plate with Chromate Treatment

TOLERANCE B (see page 105)

Finger Guard (Galaxy)
Part No. 557216
Made of steel wire finished in bright zinc
Meets UL, CSA .25 dia. spacing

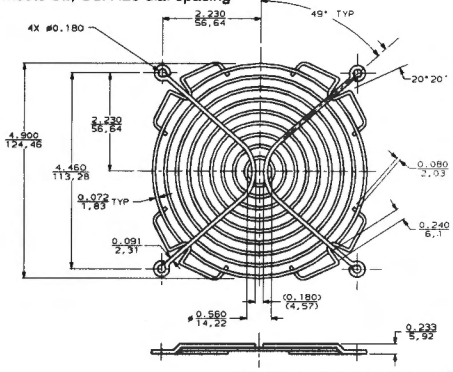

TOLERANCE B (see page 105)

Finger Guard (Galaxy)
Part No. 550651
Material: RTP 305 glass reinforced polycarbonate or GE Valox 420 polyester
UL Rating 94V-0

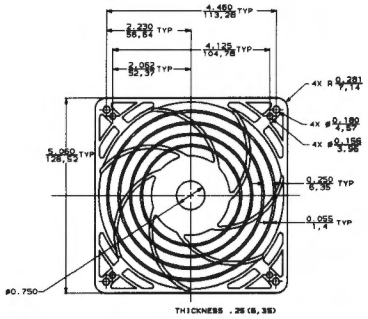

Color: Black

TOLERANCE A (see page 105)

Finger Guard (Patriot DC, Patriot)
Part No. 551199
Steel wire, welded and bright zinc plated.
Meets UL, CSA .250/6.35 spacing

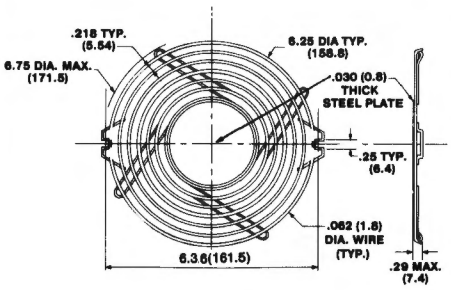

TOLERANCE B (see page 105)

Finger Guard (Major DC, Major)
Part No. 550272
Steel wire, welded and bright zinc plated
Meets UL, CSA .250/6.35 spacing

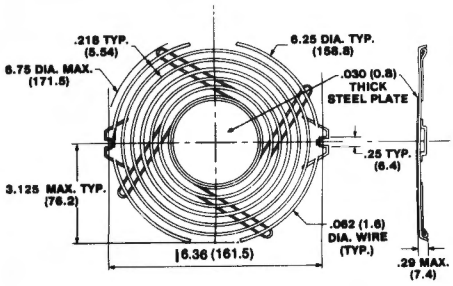

TOLERANCE B (see page 105)

Finger Guard (Biscuit DC, Biscuit)
Part No. 477626

.030 (.76) thick type 302 stainless steel. Screws onto outlet of blower with (2) 8-32 machine screws (not supplied)

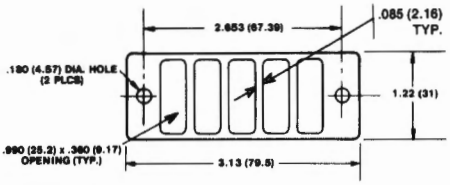

TOLERANCE A (see below)

Finger Guard (Tarzan)
Part No. 476136

Made of steel wire finished in nickel chrome

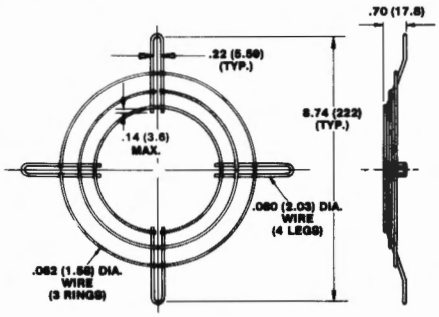

TOLERANCE B (see below)

Finger Guard (Caravel)
Part No. 476323

Made of steel wire finished in bright zinc. Mounts using #8 machine screws in the 4 legs equally spaced on 9.688 (246.1) dia.

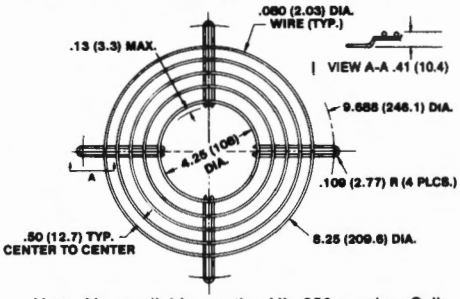

Note: Also available meeting UL .250 spacing. Call factory for specifications on P/N 555985

TOLERANCE B (see below)

Mounting Clip (Feather)
Part No. 476154 (set of 3)

Used with #4 machine screws. Three clips packed in a bag.

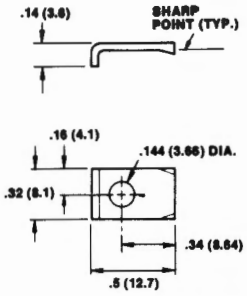

Material: .048 (1.24) thick steel, zinc plated

TOLERANCE B (see below)

Guard Mounting Clips (Feather)
Part No. 476649

For flush mount of fan onto customer panel, holding flush mount guard no. 476651 to panel. See page 75 for installation details

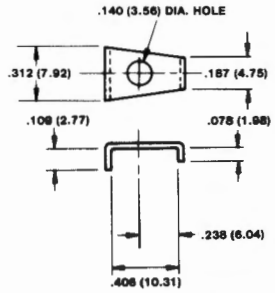

TOLERANCE B (see below)

Mounting Clips (Major DC, Patriot DC, Whisper, Muffin, Major, Patriot)
Part No. 477663 (Flush)
477670 (Standoff)

Fits over .25/6.35 mounting flanges of above fans

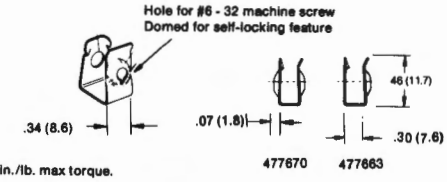

5 in./lb. max torque.

Material: .017 (.43) thick tempered spring steel
Finish: Black phosphate with oil dip

TOLERANCE B (see below)

Mounting Clips (Whisper XL DC, Muffin XL DC, Whisper XL, Muffin XL)
Part No. 550113

Fits over mounting boss of above fans

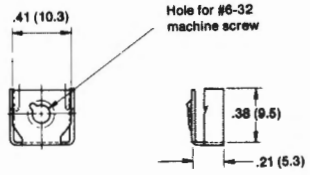

5 in./lb. max torque.

Material: .017 (.43) thick tempered spring steel
Finish: Black phosphate with oil dip

TOLERANCE B (see below)

Plug & Cord (Sprite DC, Sprite, Whisper XL, Muffin XL, Skeleton, Major, Patriot, Caravel, Tarzan, Biscuit)
Part No. 550440

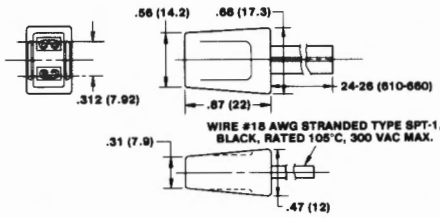

UL File No. E42397
GUIDE ZPFW2 Wiring Harness
CSA File No. LR45371

TOLERANCE A (see below)

Plug & Cord (Feather)
Part No. 428023

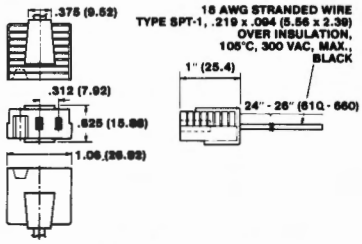

UL File No. E42397 Guide ZPFW2 Wiring Harness

TOLERANCE A (see below)

Plug & Cord (Sprite DC, Galaxy DC, Whisper XL DC, Muffin XL DC)
Polarized with red tracer
Part No. 571064

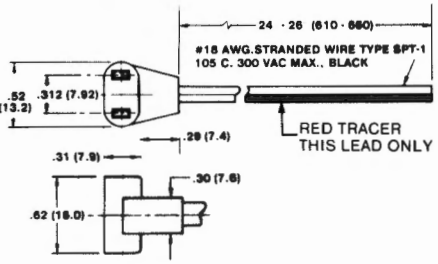

TOLERANCE B

Plug & Cord (Sprite DC, Sprite, Whisper, Whisper XL, Muffin, Muffin XL, Skeleton, Major, Patriot, Caravel, Tarzan, Biscuit)
Part No. 428056

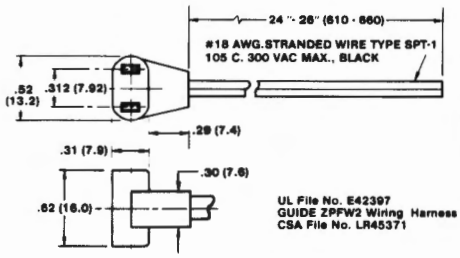

UL File No. E42397
GUIDE ZPFW2 Wiring Harness
CSA File No. LR45371

TOLERANCE B

TOLERANCE A: .XX = ± .03 (0.8)
.XXX = ± .010 (0.25)

TOLERANCE B: .XX = ± .05 (1.3)
.XXX = ± .015 (0.38)

CONNECTORS:

Connectors By Manufacturer And Part Number

Below is a list of connectors currently being supplied on fan or blower leads by Comair Rotron. Tooling is presently in-house and typically some inventory is available. Other connectors may be selected, however, tooling and connector availability may affect leadtimes.

AMP INC.

Mfg. P/N		Comair Rotron P/N
31269		160077
2-31882-3		200300
2-31882-3	(INSULATED)	200200
31885		551521
31886		552110
31889		160079
2-31889-3		165006
31891		160403
31894		160352
34080		160320
36954		551522
40724		551171
40725		160402
41772		160073
42037-0		160374
42068-1		160337
42713-2		160379
60284-2	(LOOSE)	160471
60433-2	(REEL)	160424
60535-2	(STRIP)	551547
60617-2	(LOOSE)	160370
61116-1	(STRIP)	200310
61117-1	(STRIP)	160305
61118-1		160044
61173-1	(LOOSE)	160281
61174-1	(LOOSE)	160364
61314-4	(STRIP)	160468
61408-1	(STRIP)	165011
62122-1		160394
62274-1		160092
62977-1		160425
62980-1		552412
62981-1		552413
63009-1		160423
66103-1		160288
66103-2	(LOOSE)	160375
66103-4	(LOOSE)	160285
66107-4		160287
66506-4		165097
85969-8		160395
86492-2		160386
1-87175-0		160184
87124-1		160186
87165-2	(LOOSE)	160487
87179-1		160185
87865-7		165041
102241-1		160385
103626-1		160289
103644-4		160239
103645-1		160302
103653-1		160292
103945-1		160343
103945-4		160207
103957-2		160479
103997-6		160291
170360-1	(STRIP)	160466
170360-1	(STRIP)	160493
170361-3	(STRIP)	160480
172165-1		160492
172166-1		160481
172233-1		160465
207016-1		160284
207153-1		160286
208979-2		160440
321026		160319
350079-1	(STRIP)	200258
350218-1	(STRIP)	160004
350536-1	(STRIP)	160362
350537-1		160120
350538-3	(STRIP)	165050
350547-1		120188
350570-1		160180
350570-2		165061
350570-6		160273
350689-1		160236
350690-1	(LOOSE)	160199
350699-1	(STRIP)	160071
350705-1	(LOOSE)	160332
350706-2	(LOOSE)	160504
350766-1		160048
350767-1		160066
350777-1		160148
350778-1		160094
350779-1		160158
350781-1		160499
350809-1		160478
350851-1		160159
350851-2		160392
350967-1		160322
1-480303-0		160469
1-480305-0		200181
1-480318-0		160280
1-480319-0		160107
1-480426-0		160033
1-480698-0		160069
1-480700-0		160005
1-480707-0		160232
1-480724-0		160057
1-480763-0		160196
2-520103-2		160376
2-520183-2		160272
2-520264-2		165076
2-520409-2		160345
1-530151-0		160290
640250-5		160511
640252-1	(LOOSE)	160510
640440-2		165075
640440-4		165096
640440-5		160226
640442-2		160461
640456-2		160453
1-640508-0		160323
640551-2		160494
640628-1	(LOOSE)	160401

AMP INC. (CONTINUED)

Mfg. P/N	Comair Rotron P/N
640917-1	160220
641190-5	160399
641219-2	160246
641437-3	160408
643067-2	160247
643182-2	160498
643253-1	160500
770002-1	160378
770018-1	160330
770252-2	160329

DUPONT ELECTRONICS INTERCONNECT & PACKAGING GROUP (BERG)

Mfg. P/N	Comair Rotron P/N
47216-001	160515
48116-000	160513
48236-00	160297
65039-033	165062
65307-001 (POLARIZED)	165064
65406-001	160514
75598-003	165063

HEYCO MOLDED PRODUCTS, INC.

1247	160441

KEYSTONE

1287 (LOOSE)	160429

MALCO

140-8141-052	160035

METHODE ELECTRONICS, INC.

1300-103	570878
3100-3-102-17	160435
3300-302-222 (INS)	160436
3300-303-218	160446

MOLEX INC.

Mfg. P/N	Comair Rotron P/N
1190-T	200010
1380-T	200329
1380-TL (LOOSE)	120284
1381-T	477607
02-06-1103	160192
02-06-2101	272013
02-06-2103 (LOOSE)	160255
02-06-6103	160208
02-09-1118	551427
02-09-2118	551420
03-06-1023	160191
03-06-2023	550108
03-06-2032	160212
03-06-2055	160258
03-50-0106	160459
08-50-0113	160189
03-50-0114	160325
08-50-0115	160241
08-50-0189	160202
08-56-0106	160214
08-70-1028	160227
09-50-3021	160242
09-50-3031	160216
10-01-3026	160228
15-31-1021	160254
15-31-1031	165065
22-01-2027	160188
22-01-3037	160324
22-01-3047	160482
26-03-3021	160203
39-00-0054	160404
39-01-2061	160405
90156-0143	160483
90290-1112	160484