A Nidec Group Company
Nidec Motors & Actuators
All for dreams

Series SWMP
Motor type 403 279

Design Data	
Commutation	Brushed
Direction of rotation	Bi-directional
Bearing type	

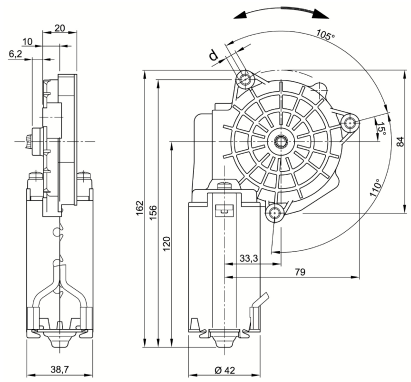

Performance data		
Rated voltage [V]	U_N	24
Nominal torque [Nm]	M_N	2.00
No-load speed [min^{-1}]	n_0	54.0
Nominal power [W]	P_N	9.94
Nominal current [A]	I_N	1.5
Nominal force [kN]	F_N	0.00
Duty cycle		s1

Sensor data	
Pulses	0
Output channels	0

Other data	
Gear ratio	85/1
Gear wheel material	Plastic
Suppression components	7.5µH, 47nF
Enclosure class	IP30
Weight [kg]	0.710

Remarks: d = 7.5mm, Ball bearing

Motor picture

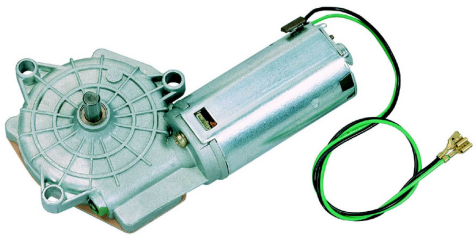

Characteristic curves

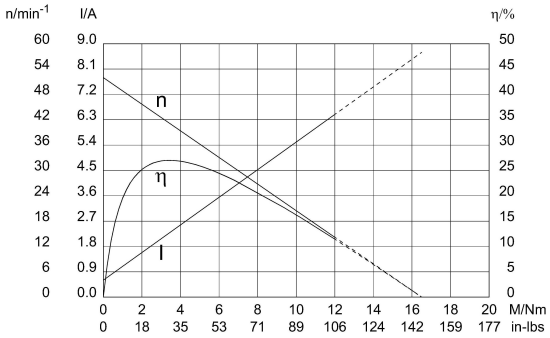

Output shaft drawing (W), Wiring diagrams (S) and Connector layout (K)

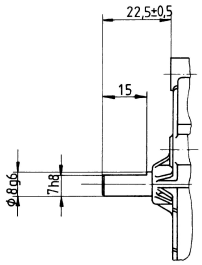

S 30

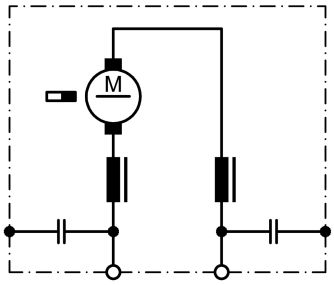

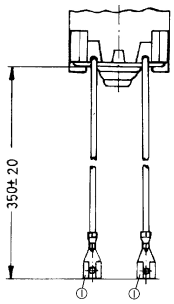

Spade connector 4.8 DIN 46 247

NIDEC MOTORS & ACTUATORS
Europe: +49 7142 5083369 | North America: +52 656 629 3800
www.nidec-ma.com
sales@nidec-ma.com