BULLETIN LCG

Series GM8000, GM9000, GM14900

LO-COG® DC Gearmotors

Pittman brand LO-COG® brush-commutated DC gearmotors offer smooth, quiet operation and long life. LO-COG gearmotors feature sintered steel spur gears and are available with several reduction ratios and torque ratings to provide an economical solution for a wide range of applications. Armatures are skewed to minimize magnetic cogging, even at low speeds, and windings are resin impregnated for greater reliability in incremental motion applications. An innovative cartridge brush assembly reduces audible and electrical noise and significantly improves brush life by maintaining optimum brush force throughout the life of the motor. For precision motor control, Hewlett-Packard® optical encoders are available in 2 or 3 channel versions with several CPR ranges to meet your position, velocity and direction feedback needs.

Construction

- **2 pole permanent magnet stators are constructed of ceramic magnets enclosed in heavy-gauge steel return rings**
- **Diamond turned commutators ensure maximum brush life**
- **Standard copper graphite brushes (Other brush materials available)**
- **Precision ground hardened stainless steel shafts**
- **Silicon-steel laminations**
- **Self-aligning, sintered bronze bearings**

Options

- **High-torque gears or high-torque wide-face gears**
- **Low noise, primary cluster gears**
- **Custom cables**
- **Multiple shaft configurations**
- **Shaft-mounted pulleys and gears**
- **Ball bearings**
- **Multiple windings**
- **Electromechanical brakes**
- **Integrated Hewlett-Packard® optical encoders**
- **Adaptors available for other encoders**
- **RFI suppression**
- **Dynamic armature balancing**

Series GM8000

- **11 ratios from 6.3.1 to 1803.6.1**
- **Peak Torques to 100 oz·in standard**
- **160 and 175 oz·in gearheads optional**
- **Available in 3 motor lengths**
- **Encoder resolutions from 96 to 1024**

Series GM9000

- **12 ratios from 5.9.1 to 4732.5.1**
- **Peak Torques to 175 oz·in standard**
- **300 and 500 oz·in gearheads optional**
- **Available in 6 motor lengths**
- **Encoder resolutions from 96 to 2048**

Series GM14000

- **4 ratios from 5.9.1 to 218.4.1**
- **Peak Torques to 175 oz·in standard**
- **300 and 500 oz·in gearheads optional**
- **Available in 7 motor lengths**
- **Encoder resolutions from 96 to 2048**

PITTMAN®
a PennEngineering® company
Power Your Ideas™

PittmanExpress℠

Get same day shipment of sample motors for models listed in the Pittman Express Catalog (Bulletin PE).

Every Pittman motor is subjected to automated performance testing prior to shipment.

Gearmotor Data

Line No.	Parameter	Symbol	Units	Reduction Ratios 6.3:1	9.9:1	19.5:1	30.9:1	60.5:1	95.9:1	187.7:1	297.5:1	581.8:1	922.3:1	1803.6:1
MECHANICAL SPECIFICATIONS														
1	Max. Load Standard Gears[1]	T_L	oz·in	100	100	100	100	100	100	100	100	100	100	100
			(N·m)	(0.71)	(0.71)	(0.71)	(0.71)	(0.71)	(0.71)	(0.71)	(0.71)	(0.71)	(0.71)	(0.71)
2	Max. Load Cut Steel Gears[1]	T_L	oz·in	N/A	160	160	160	160	160	160	160	160	160	160
			(N·m)	(N/A)	(1.13)	(1.13)	(1.13)	(1.13)	(1.13)	(1.13)	(1.13)	(1.13)	(1.13)	(1.13)
3	Max. Load Wide Face Gears[1]	T_L	oz·in	N/A	175	175	175	175	175	175	175	175	175	175
			(N·m)	(N/A)	(1.24)	(1.24)	(1.24)	(1.24)	(1.24)	(1.24)	(1.24)	(1.24)	(1.24)	(1.24)
4	Gearbox Shaft Rotation[2]	—	—	CW	CCW	CCW	CW	CW	CCW	CCW	CW	CW	CCW	CCW
5	Gearbox Efficiency	—	%	81	73	73	66	66	59	59	53	53	48	48
6	Gearbox Weight (Mass)	W_G	oz	2.35	2.49	2.49	2.62	2.62	2.76	2.76	3.11	3.11	3.25	3.25
			(g)	(66.6)	(70.6)	(70.6)	(74.3)	(74.3)	(78.2)	(78.2)	(88.2)	(88.2)	(92.1)	(92.1)
7	Gearbox Length	L_2	in max	0.968	0.968	0.968	0.968	0.968	0.968	0.968	1.164	1.164	1.164	1.164
			(mm max)	(24.6)	(24.6)	(24.6)	(24.6)	(24.6)	(24.6)	(24.6)	(29.6)	(29.6)	(29.6)	(29.6)
8	Length, GM82X2	L_3	in max	2.977	2.977	2.977	2.977	2.977	2.977	2.977	3.173	3.173	3.173	3.173
			(mm max)	(75.6)	(75.6)	(75.6)	(75.6)	(75.6)	(75.6)	(75.6)	(80.6)	(80.6)	(80.6)	(80.6)
9	Length, GM82X3	L_3	in max	3.102	3.102	3.102	3.102	3.102	3.102	3.102	3.298	3.298	3.298	3.298
			(mm max)	(78.8)	(78.8)	(78.8)	(78.8)	(78.8)	(78.8)	(78.8)	(83.8)	(83.8)	(83.8)	(83.8)
10	Length, GM82X4	L_3	in max	3.352	3.352	3.352	3.352	3.352	3.352	3.352	3.548	3.548	3.548	3.548
			(mm max)	(85.1)	(85.1)	(85.1)	(85.1)	(85.1)	(85.1)	(85.1)	(90.1)	(90.1)	(90.1)	(90.1)
11	Length, GM87X2	L_3	in max	2.91	2.91	2.91	2.91	2.91	2.91	2.91	3.106	3.106	3.106	3.106
			(mm max)	(73.9)	(73.9)	(73.9)	(73.9)	(73.9)	(73.9)	(73.9)	(78.9)	(78.9)	(78.9)	(78.9)
12	Length, GM87X3	L_3	in max	3.035	3.035	3.035	3.035	3.035	3.035	3.035	3.231	3.231	3.231	3.231
			(mm max)	(77.1)	(77.1)	(77.1)	(77.1)	(77.1)	(77.1)	(77.1)	(82.1)	(82.1)	(82.1)	(82.1)
13	Length, GM87X4	L_3	in max	3.285	3.285	3.285	3.285	3.285	3.285	3.285	3.481	3.481	3.481	3.481
			(mm max)	(83.4)	(83.4)	(83.4)	(83.4)	(83.4)	(83.4)	(83.4)	(88.4)	(88.4)	(88.4)	(88.4)
NO-LOAD SPEED														
14	GM8X22	S_{NL}	rpm	1246	786	402	253	130	81.8	41.8	26.4	13.5	8.51	4.35
			(rad/s)	(130)	(82.3)	(42.1)	(26.5)	(13.6)	(8.57)	(4.38)	(2.76)	(1.41)	(.891)	(.456)
15	GM8X23	S_{NL}	rpm	1317	831	425	268	137	86.5	44.2	27.9	14.3	9.00	4.60
			(rad/s)	(138)	(87.0)	(44.5)	(28.1)	(14.3)	(9.06)	(4.63)	(2.92)	(1.50)	(.942)	(.482)
16	GM8X24	S_{NL}	rpm	1612	1017	520	328	168	106	54.1	34.1	17.5	11.0	5.63
			(rad/s)	(169)	(107)	(54.5)	(34.3)	(17.6)	(11.1)	(5.67)	(3.57)	(1.83)	(1.15)	(.590)

[1]Represents gearbox capability only. Continuous load torque capability will vary with gear ratio, motor selection, and operating conditions.
[2]Shaft rotation is designated while looking at output shaft with motor operating in a clockwise direction. Gearmotor is polarity reversible.

Motor Data

Line No.	Parameter	Symbol	Units	8X22	8X23	8X24
17	Continuous Torque (Max.)[3]	T_C	oz·in	1.6	2.0	2.6
			(N·m)	(11.2×10^{-3})	(14.1×10^{-3})	(18.5×10^{-3})
18	Peak Torque (Stall)	T_{PK}	oz·in	7.4	10.5	16.8
			(N·m)	(52.0×10^{-3})	(74.2×10^{-3})	(118.6×10^{-3})
19	Motor Constant	K_M	oz·in/√W	1.12	1.30	1.49
			(N·m/√W)	(7.9×10^{-3})	(9.2×10^{-3})	(710.5×10^{-3})
20	No-Load Speed	S_0	rpm	7847	8298	10158
			(rad/s)	(822)	(869)	(1064)
21	Friction Torque	T_F	oz·in	0.35	0.35	0.35
			(N·m)	(2.5×10^{-3})	(2.5×10^{-3})	(2.5×10^{-3})
22	Rotor Inertia	J_M	oz·in·s^2	1.4×10^{-4}	1.7×10^{-4}	2.3×10^{-4}
			(kg·m^2)	(9.89×10^{-7})	(1.20×10^{-6})	(1.62×10^{-6})

[3]Continuous torque specified at 25°C ambient temperature and without additional heat sink.

©1999 Pittman, a PennEngineering company. LO-COG, ELCOM, ELCOM SL, and ELCOM ST are brand names and trademarks for motors manufactured exclusively by Pittman.

PITTMAN®

Motor Data, continued

Line No.	Parameter	Symbol	Units	8X22	8X23	8X24
26	Electrical Time Constant	τ_E	ms	0.52	0.55	0.54
27	Mechanical Time Constant	τ_M	ms	15.6	14.1	14.7
28	Viscous Damping—Infinite Source Impedance	D	oz·in/krpm (N·m/(rad/s))	0.0153 (1.03×10^{-6})	0.0176 (1.19×10^{-6})	0.0202 (1.36×10^{-6})
29	Viscous Damping—Zero Source Impedance	K_D	oz·in/krpm (N·m/(rad/s))	0.92 (6.20×10^{-5})	1.25 (8.43×10^{-5})	1.63 (1.10×10^{-4})
30	Maximum Winding Temperature	θ_{MAX}	°F (°C)	311 (155)	311 (155)	311 (155)
31	Thermal Impedance	R_{TH}	°F/watt °C/watt	75.9 (24.4)	72.9 (22.7)	70.5 (21.4)
32	Thermal Time Constant	τ_{TH}	min	7.75	9.00	10.70
33	Motor Weight (Mass)	W_M	oz (g)	4.69 (133.0)	5.05 (143.2)	5.81 (164.7)

Model GM8XX2 Winding Data (Other windings available upon request)

Line No.	Parameter	Symbol	Units	GM8X22			
34	Reference Voltage	E	V	12.0	19.1	24.0	30.3
35	Torque Constant	K_T	oz·in/A (N·m/A)	1.94 (13.7×10^{-3})	3.07 (21.7×10^{-3})	3.88 (27.4×10^{-3})	4.88 (34.5×10^{-3})
36	Back-EMF Constant	K_E	V/krpm (V/rad/s)	1.43 (13.7×10^{-3})	2.27 (21.7×10^{-3})	2.87 (27.4×10^{-3})	3.61 (34.5×10^{-3})
37	Resistance	R_T	Ω	3.10	7.61	12.1	19.1
38	Inductance	L	mH	1.57	3.93	6.27	9.92
39	No-Load Current	I_{NL}	A	0.25	0.16	0.12	0.10
40	Peak Current (Stall)[4]	I_P	A	3.88	2.51	1.99	1.59

Model GM8XX3 Winding Data (Other windings available upon request)

Line No.	Parameter	Symbol	Units	GM8X23			
41	Reference Voltage	E	V	12.0	19.1	24.0	30.3
42	Torque Constant	K_T	oz·in/A (N·m/A)	1.88 (13.3×10^{-3})	2.94 (20.8×10^{-3})	3.73 (26.4×10^{-3})	4.71 (33.3×10^{-3})
43	Back-EMF Constant	K_E	V/krpm (V/rad/s)	1.39 (13.3×10^{-3})	2.18 (20.8×10^{-3})	2.76 (26.4×10^{-3})	3.48 (33.3×10^{-3})
44	Resistance	R_T	Ω	2.17	5.20	8.24	13.1
45	Inductance	L	mH	1.17	2.85	4.57	7.29
46	No-Load Current	I_{NL}	A	0.27	0.17	0.13	0.11
47	Peak Current (Stall)[4]	I_P	A	5.54	3.67	2.91	2.32

Model GM8XX4 Winding Data (Other windings available upon request)

Line No.	Parameter	Symbol	Units	GM8X24			
48	Reference Voltage	E	V	12.0	19.1	24.0	30.3
49	Torque Constant	K_T	oz·in/A (N·m/A)	1.54 (10.9×10^{-3})	2.47 (17.5×10^{-3})	3.09 (21.9×10^{-3})	3.86 (27.3×10^{-3})
50	Back-EMF Constant	KE	V/krpm (V/rad/s)	1.14 (10.9×10^{-3})	1.83 (17.5×10^{-3})	2.29 (21.9×10^{-3})	2.86 (27.3×10^{-3})
51	Resistance	R_T	Ω	1.17	2.79	4.33	6.75
52	Inductance	L	mH	0.58	1.50	2.34	3.65
53	No-Load Current	I_{NL}	A	0.36	0.23	0.18	0.15
54	Peak Current (Stall)[4]	I_P	A	10.3	6.85	5.54	4.49

[4]Theoretical values supplied for reference only.

PITTMAN®

Model GM8X22

Motor Speed & Current vs. Torque
(24V Winding)

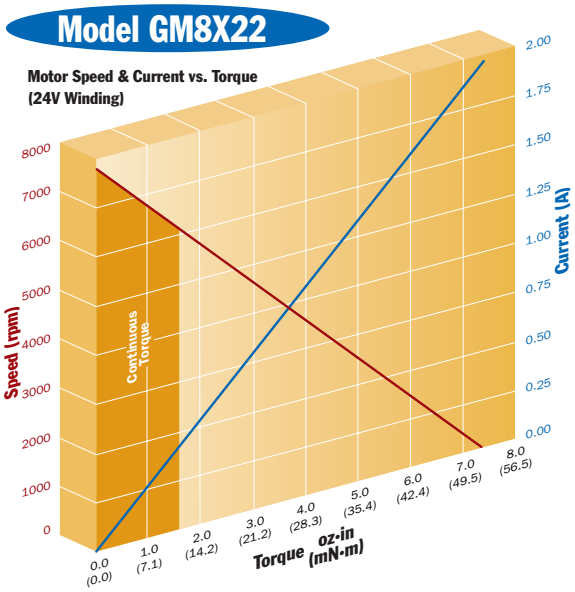

Model GM8X23

Motor Speed & Current vs. Torque
(24V Winding)

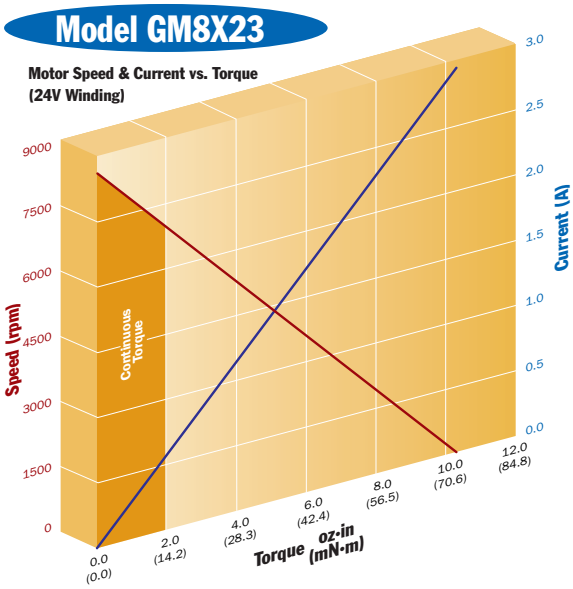

Model GM8X24

Motor Speed & Current vs. Torque
(24V Winding)

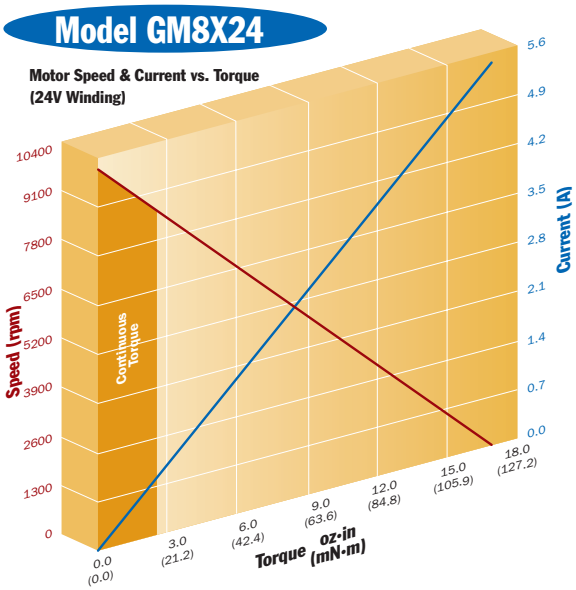

PITTMAN®

GM82XX Motor

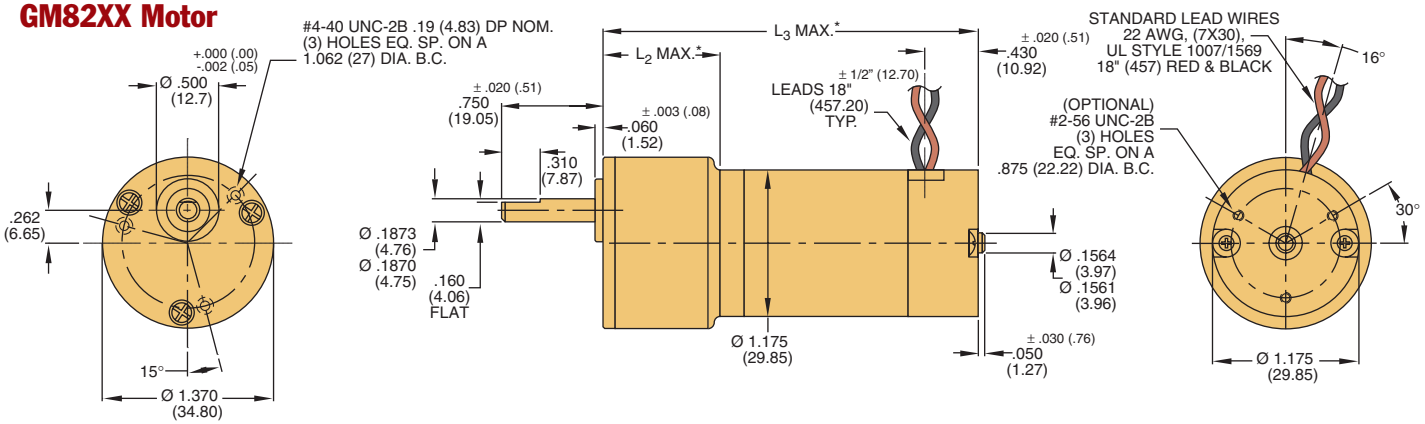

GM87XX Motor

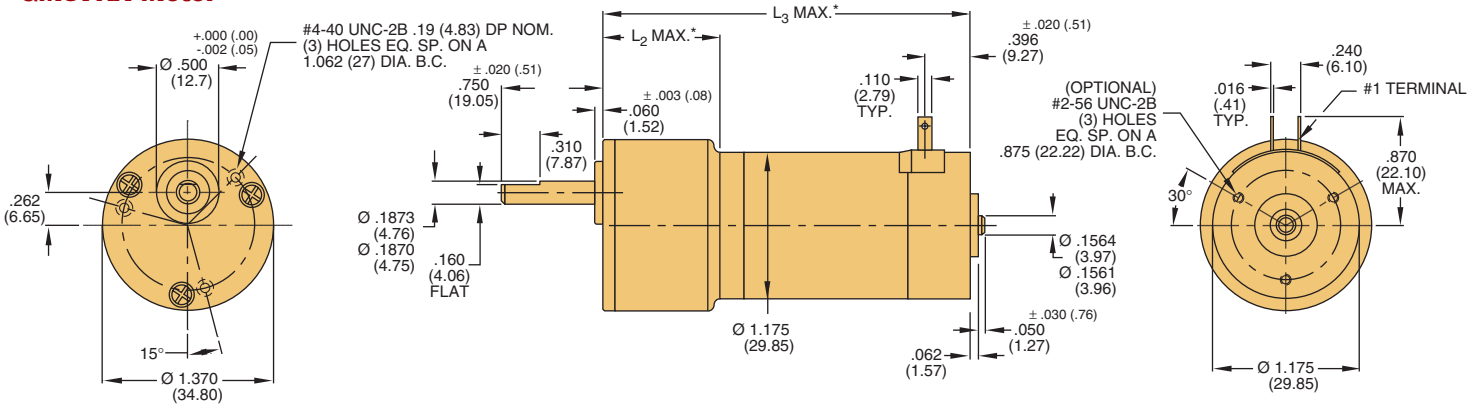

Notes:
- Unless otherwise specified, all tolerances are to be ±.005 (.01)
- All measurements are in inches (mm)

*See line numbers 7 through 13 in gearmotor data chart

PITTMAN®

GM82XX Motor with 91X0 Encoder

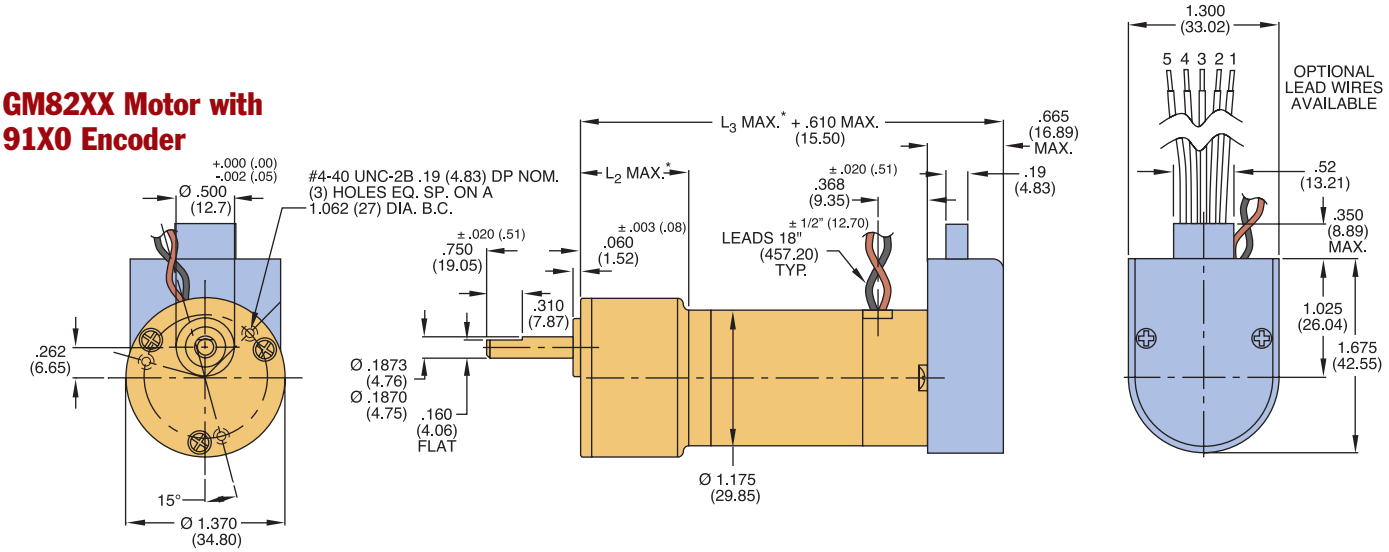

GM87XX Motor with 91X0 Encoder

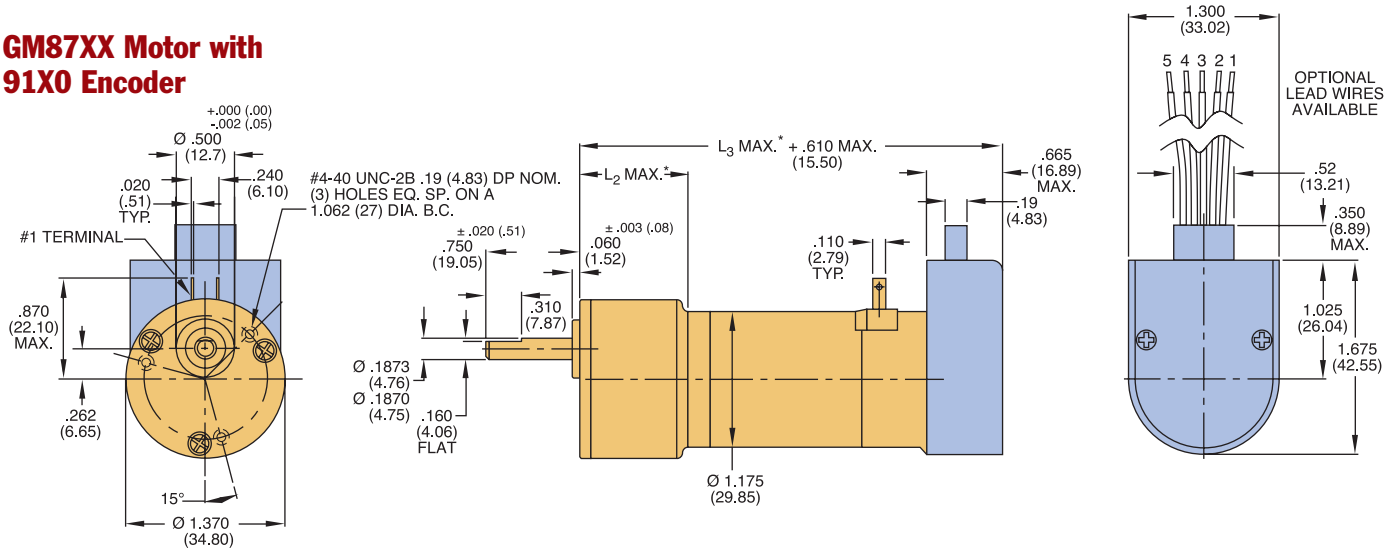

Encoder Connection Chart

Pin No.	Color	Connection
1	Black	Ground
2	Green	Index/NC
3	Yellow	Channel A
4	Red	Vcc
5	Blue	Channel B

Notes:
- Unless otherwise specified, all tolerances are to be ±.005 (.01)
- All measurements are in inches (mm)

*See line numbers 7 through 13 in gearmotor data chart

PITTMAN®

Gearmotor Data

Line No.	Parameter	Symbol	Units	Reduction Ratios 5.9:1	11.5:1	19.7:1	38.3:1	65.5:1	127.8:1	218.4:1	425.9:1	728.1:1	1419.8:1	2426.9:1	4732.5:1
MECHANICAL SPECIFICATIONS (Standard and High-Torque Gears)															
1	Max. Load Standard Gears[1]	T_L	oz·in	175	175	175	175	175	175	175	175	175	175	175	175
			(N·m)	(1.24)	(1.24)	(1.24)	(1.24)	(1.24)	(1.24)	(1.24)	(1.24)	(1.24)	(1.24)	(1.24)	(1.24)
2	Max. Load High-Torque Gears[1]	T_L	oz·in	300	300	300	300	300	300	300	300	300	300	300	300
			(N·m)	(2.12)	(2.12)	(2.12)	(2.12)	(2.12)	(2.12)	(2.12)	(2.12)	(2.12)	(2.12)	(2.12)	(2.12)
3	Gearbox Shaft Rotation[2]	—	—	CW	CW	CCW	CCW	CW	CW	CCW	CCW	CW	CW	CCW	CCW
4	Gearbox Efficiency	—	%	81	81	73	73	66	66	59	59	53	53	48	48
5	Gearbox Weight (Mass)	W_G	oz	5.90	5.90	6.26	6.26	6.62	6.62	6.98	6.98	7.34	7.34	8.18	8.18
			(g)	(167.3)	(167.3)	(177.5)	(177.5)	(187.7)	(187.7)	(197.9)	(197.9)	(208.1)	(208.1)	(231.9)	(231.9)
6	Gearbox Length	L_2	in max	1.373	1.373	1.373	1.373	1.373	1.373	1.373	1.373	1.373	1.373	1.528	1.528
			(mm max)	(34.9)	(34.9)	(34.9)	(34.9)	(34.9)	(34.9)	(34.9)	(34.9)	(34.9)	(34.9)	(38.8)	(38.8)
7	Length, GM92X2/GM94X2	L_3	in max	3.101	3.101	3.101	3.101	3.101	3.101	3.101	3.101	3.101	3.101	3.256	3.256
			(mm max)	(78.8)	(78.8)	(78.8)	(78.8)	(78.8)	(78.8)	(78.8)	(78.8)	(78.8)	(78.8)	(82.7)	(82.7)
8	Length, GM92X3/GM94X3	L_3	in max	3.476	3.476	3.476	3.476	3.476	3.476	3.476	3.476	3.476	3.476	3.631	3.63
			(mm max)	(88.3)	(88.3)	(88.3)	(88.3)	(88.3)	(88.3)	(88.3)	(88.3)	(88.3)	(88.3)	(92.2)	(92.2)
9	Length, GM92X4/GM94X4	L_3	in max	3.676	3.676	3.676	3.676	3.676	3.676	3.676	3.676	3.676	3.676	3.831	3.831
			(mm max)	(93.4)	(93.4)	(93.4)	(93.4)	(93.4)	(93.4)	(93.4)	(93.4)	(93.4)	(93.4)	(97.3)	(97.3)
10	Length, GM9235/GM9435	L_3	in max	3.976	3.976	3.976	3.976	3.976	3.976	3.976	3.976	3.976	3.976	4.131	4.131
			(mm max)	(101.0)	(101.0)	(101.0)	(101.0)	(101.0)	(101.0)	(101.0)	(101.0)	(101.0)	(101.0)	(104.9)	(104.9)
11	Length, GM9236/GM9436	L_3	in max	4.326	4.326	4.326	4.326	4.326	4.326	4.326	4.326	4.326	4.326	4.481	4.481
			(mm max)	(109.9)	(109.9)	(109.9)	(109.9)	(109.9)	(109.9)	(109.9)	(109.9)	(109.9)	(109.9)	(113.8)	(113.8)
MECHANICAL SPECIFICATIONS (High-Torque Wide Face Gears)															
12	Max. Load[1]	T_L	oz·in	NOT AVAILABLE		500	500	500	500	500	500	500	500	NOT AVAILABLE	
			(N·m)			(3.53)	(3.53)	(3.53)	(3.53)	(3.53)	(3.53)	(3.53)	(3.53)		
13	Gearbox Shaft Rotation[2]	—	—			CCW	CCW	CW	CW	CCW	CCW	CW	CW		
14	Gearbox Efficiency	—	%			73	73	66	66	59	59	53	53		
15	Gearbox Weight (Mass)	W_G	oz			6.52	6.52	6.88	6.88	7.24	7.24	8.08	8.08		
			(g)			(184.8)	(184.8)	(195.0)	(195.0)	(205.3)	(205.3)	(229.1)	(229.1)		
16	Gearbox Length	L_2	in max			1.373	1.373	1.373	1.373	1.373	1.373	1.528	1.528		
			(mm max)			(34.9)	(34.9)	(34.9)	(34.9)	(34.9)	(34.9)	(38.8)	(38.8)		
17	Length, GM92X2/GM94X2	L_3	in max			3.101	3.101	3.101	3.101	3.101	3.101	3.256	3.256		
			(mm max)			(78.8)	(78.8)	(78.8)	(78.8)	(78.8)	(78.8)	(82.7)	(82.7)		
18	Length, GM92X3/GM94X3	L_3	in max			3.476	3.476	3.476	3.476	3.476	3.476	3.631	3.631		
			(mm max)			(88.3)	(88.3)	(88.3)	(88.3)	(88.3)	(88.3)	(92.2)	(92.2)		
19	Length, GM92X4/GM94X4	L_3	in max			3.676	3.676	3.676	3.676	3.676	3.676	3.831	3.831		
			(mm max)			(93.4)	(93.4)	(93.4)	(93.4)	(93.4)	(93.4)	(97.3)	(97.3)		
20	Length, GM9235/GM9435	L_3	in max			3.976	3.976	3.976	3.976	3.976	3.976	4.131	4.131		
			(mm max)			(101.1)	(101.1)	(101.1)	(101.1)	(101.1)	(101.1)	(104.9)	(104.9)		
21	Length, GM9236/GM9436	L_3	in max			4.326	4.326	4.326	4.326	4.326	4.326	4.481	4.481		
			(mm max)			(109.9)	(109.9)	(109.9)	(109.9)	(109.9)	(109.9)	(113.8)	(113.8)		
NO-LOAD SPEED (All Gears)															
22	GM9X32	S_{NL}	rpm	1189	610	357	183	107	54.9	32.1	16.5	9.6	4.9	2.9	1.5
			(rad/s)	(125)	(63.9)	(37.4)	(19.2)	(11.2)	(5.75)	(3.36)	(1.73)	(.513)	(.513)	(.304)	(.157)
23	GM9X33	S_{NL}	rpm	1016	521	305	156	91.5	46.9	27.4	14.1	8.2	4.2	2.5	1.3
			(rad/s)	(106)	(54.6)	(31.9)	(16.3)	(9.58)	(4.91)	(2.87)	(1.48)	(.859)	(.440)	(.262)	(.136)
24	GM9X34	S_{NL}	rpm	1043	535	313	160	93.9	48.1	28.2	14.4	8.5	4.3	2.5	1.3
			(rad/s)	(109)	(56.0)	(32.8)	(16.8)	(9.83)	(5.04)	(2.95)	(1.51)	(.890)	(.450)	(.262)	(.136)

[1]Represents gearbox capability only. Continuous load torque capability will vary with gear ratio, motor selection, and operating conditions.
[2]Shaft rotation is designated while looking at output shaft with motor operating in a clockwise direction. Gearmotor is polarity reversible.

PITTMAN®

Gearmotor Data, continued

Line No.	Parameter	Symbol	Units	Reduction Ratios 5.9:1	11.5:1	19.7:1	38.3:1	65.5:1	127.8:1	218.4:1	425.9:1	728.1:1	1419.8:1	2426.9:1	4732.5:1
NO-LOAD SPEED (All Gears), continued															
28	GM9X35	S_{NL}	rpm (rad/s)	1075 (112.5)	552 (57.8)	322 (33.7)	166 (17.4)	96.9 (10.1)	49.7 (5.2)	29.1 (3.0)	14.9 (1.6)	8.7 (.913)	4.4 (.468)	2.6 (.274)	1.3 (.140)
29	GM9X36	S_{NL}	rpm (rad/s)	834 (87.3)	427 (44.7)	250 (26.2)	128 (13.4)	75 (7.85)	38.5 (4.03)	22.5 (2.36)	11.5 (1.20)	6.8 (.712)	3.5 (.367)	2.0 (.209)	1.0 (.105)

Motor Data

Line No.	Parameter	Symbol	Units	GM9X32	GM9X33	GM9X34	GM9X35	GM9X36
30	Continuous Torque (Max.)[3]	T_C	oz·in (N·m)	2.3 (16.2×10^{-3})	4.7 (33.2×10^{-3})	6.1 (43.1×10^{-3})	6.9 (48.7×10^{-3})	9.5 (67.1×10^{-3})
31	Peak Torque (Stall)[4]	T_{PK}	oz·in (N·m)	13.8 (97.5×10^{-3})	31.6 (223.2×10^{-3})	41.3 (291.7×10^{-3})	49.4 (348.9×10^{-3})	61.8 (436.4×10^{-3})
32	Motor Constant	K_M	oz·in/√W (N·m/√W)	1.62 (11.4×10^{-3})	2.66 (18.8×10^{-3})	3.01 (21.3×10^{-3})	3.21 (22.7×10^{-3})	4.11 (29.0×10^{-3})
33	No-Load Speed	S_0	rpm (rad/s)	7015 (734.6)	5993 (627.6)	6151 (644.2)	6348 (664.8)	4916 (514.8)
34	Friction Torque	T_F	oz·in (N·m)	0.5 (3.5×10^{-3})	0.6 (4.2×10^{-3})	0.6 (4.2×10^{-3})	0.65 (4.6×10^{-3})	0.8 (5.6×10^{-3})
35	Rotor Inertia	J_M	oz·in·s^2 (kg·m^2)	2.7×10^{-4} (1.91×10^{-6})	4.6×10^{-4} (3.25×10^{-6})	5.9×10^{-4} (4.17×10^{-6})	7.9×10^{-4} (5.58×10^{-6})	1.0×10^{-3} (7.06×10^{-6})
36	Electrical Time Constant	τ_E	ms	0.63	0.84	0.85	0.89	1.06
37	Mechanical Time Constant	τ_M	ms	14.4	9.29	9.25	10.9	8.5
38	Viscous Damping—Infinite Source Impedance	D	oz·in/krpm (N·m/rad/s)	0.0272 (1.83×10^{-6})	0.0335 (2.25×10^{-6})	0.0387 (2.60×10^{-6})	0.0450 (3.03×10^{-6})	0.0525 (3.54×10^{-6})
39	Viscous Damping—Zero Source Impedance	K_D	oz·in/krpm (N·m/rad/s)	1.94 (1.31×10^{-4})	5.23 (3.52×10^{-4})	6.68 (4.50×10^{-4})	7.6 (5.12×10^{-4})	12.5 (8.42×10^{-4})
40	Maximum Winding Temp.	θ_{MAX}	°F (°C)	311 (155)	311 (155)	311 (155)	311 (155)	311 (155)
41	Thermal Impedance	R_{TH}	°F/watt °C/watt	72.9 (22.7)	66.4 (19.1)	62.8 (17.1)	58.5 (14.7)	56.3 (13.5)
42	Thermal Time Constant	τ_{TH}	min	7.21	11.1	12.0	12.9	13.5
43	Motor Weight (Mass)	W_M	oz (g)	6.98 (197.9)	8.90 (252.3)	10.1 (286.3)	0.0 (TBD)	13.8 (391.2)

Model GM9XX2 Winding Data (Other windings available upon request)

Line No.	Parameter	Symbol	Units	9X32			
44	Reference Voltage	E	V	12.0	19.1	24.0	30.3
45	Torque Constant	K_T	oz·in/A (N·m/A)	2.20 (15.6×10^{-3})	3.50 (24.7×10^{-3})	4.40 (31.1×10^{-3})	5.53 (39.1×10^{-3})
46	Back-EMF Constant	K_E	V/krpm (V/rad/s)	1.63 (15.6×10^{-3})	2.59 (24.7×10^{-3})	3.25 (31.1×10^{-3})	4.09 (39.1×10^{-3})
47	Resistance	R_T	Ω	1.93	4.70	7.38	11.6
48	Inductance	L	mH	1.16	2.94	4.64	7.34
49	No-Load Current	I_{NL}	A	0.32	0.20	0.16	0.13
50	Peak Current (Stall)	I_P	A	6.22	4.06	3.25	2.60

[3]Continuous torque specified at 25°C ambient temperature and without additional heat sink.

Model GM9X33 Winding Data (Other windings available upon request)

Line No.	Parameter	Symbol	Units	9X33			
51	Reference Voltage	E	V	12.0	19.1	24.0	30.3
52	Torque Constant	K_T	oz·in/A (N·m/A)	2.67 (18.9×10^{-3})	4.20 (29.7×10^{-3})	5.28 (37.3×10^{-3})	6.68 (47.2×10^{-3})
53	Back-EMF Constant	K_E	V/krpm (V/rad/s)	1.98 (18.9×10^{-3})	3.10 (29.7×10^{-3})	3.90 (37.3×10^{-3})	4.94 (47.2×10^{-3})
54	Resistance	R_T	Ω	1.08	2.53	3.94	6.21
55	Inductance	L	mH	0.84	2.08	3.29	5.27
56	No-Load Current	I_{NL}	A	0.30	0.19	0.15	0.12
57	Peak Current (Stall)	I_P	A	11.1	7.55	6.09	4.88

Model GM9X34 Winding Data (Other windings available upon request)

Line No.	Parameter	Symbol	Units	9X34			
58	Reference Voltage	E	V	12.0	19.1	24.0	30.3
59	Torque Constant	K_T	oz·in/A (N·m/A)	2.58 (18.2×10^{-3})	4.07 (28.7×10^{-3})	5.17 (36.5×10^{-3})	6.50 (45.9×10^{-3})
60	Back-EMF Constant	K_E	V/krpm (V/rad/s)	1.91 (18.2×10^{-3})	3.01 (28.7×10^{-3})	3.82 (36.5×10^{-3})	4.81 (45.9×10^{-3})
61	Resistance	R_T	Ω	0.83	1.89	2.96	4.62
62	Inductance	L	mH	0.63	1.56	2.51	3.97
63	No-Load Current	I_{NL}	A	0.33	0.21	0.16	0.13
64	Peak Current (Stall)	I_P	A	14.5	10.1	8.11	6.55

Model GM9X35/9X36 Winding Data (Other windings available upon request)

Line No.	Parameter	Symbol	Units	9X35				9X36			
65	Reference Voltage	E	V	12.0	19.1	24.0	30.3	12.0	19.1	24.0	30.3
66	Torque Constant	K_T	oz·in/A (N·m/A)	2.47 (17.4×10^{-3})	3.99 (28.2×10^{-3})	4.94 (34.9×10^{-3})	6.27 (44.3×10^{-3})	3.25 (23.0×10^{-3})	5.24 (37.0×10^{-3})	6.49 (45.8×10^{-3})	8.24 (58.2×10^{-3})
67	Back-EMF Constant	K_E	V/krpm (V/rad/s)	1.83 (17.4×10^{-3})	2.95 (28.2×10^{-3})	3.65 (34.9×10^{-3})	3.65 (44.3×10^{-3})	2.4 (23.0×10^{-3})	3.88 (37.0×10^{-3})	4.8 (45.8×10^{-3})	6.09 (58.2×10^{-3})
68	Resistance	R_T	Ω	.68	1.56	2.37	3.72	0.71	1.64	2.49	3.91
69	Inductance	L	mH	.51	1.34	2.05	3.30	0.66	1.72	2.63	4.24
70	No-Load Current	I_{NL}	A	0.38	0.24	0.19	0.16	0.33	0.20	0.16	0.13
71	Peak Current (Stall)	I_P	A	17.6	12.2	10.1	8.14	16.9	11.7	9.64	7.74

Model GM9X32

Motor Speed & Current vs. Torque (24V Winding)

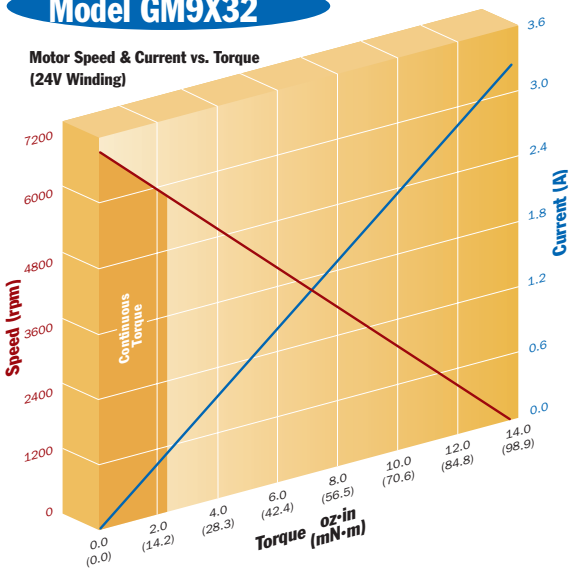

Model GM9X34

Motor Speed & Current vs. Torque (24V Winding)

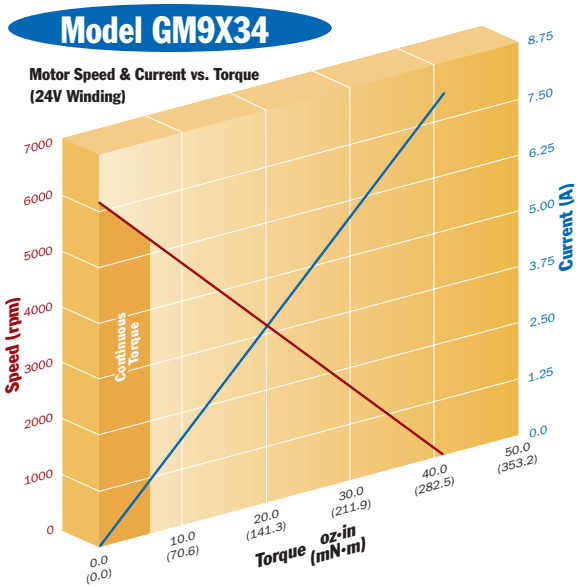

Model GM9X33

Motor Speed & Current vs. Torque (24V Winding)

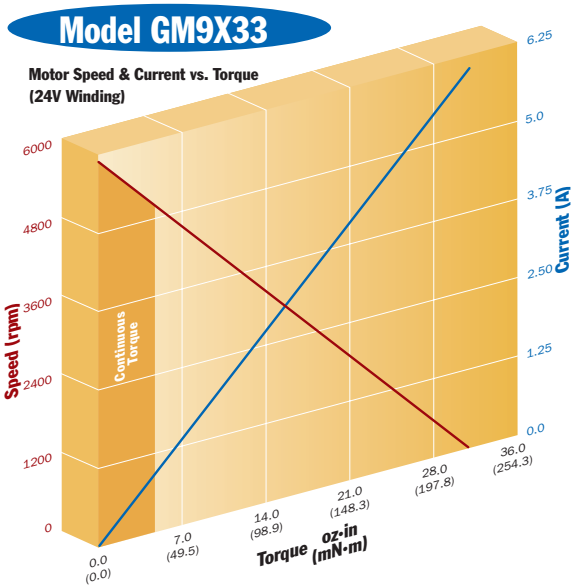

Model GM9X35

Motor Speed & Current vs. Torque (24V Winding)

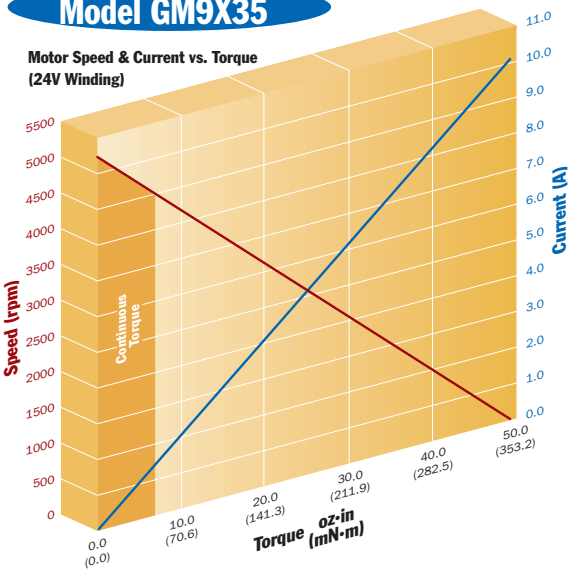

Model GM9X36

Motor Speed & Current vs. Torque (24V Winding)

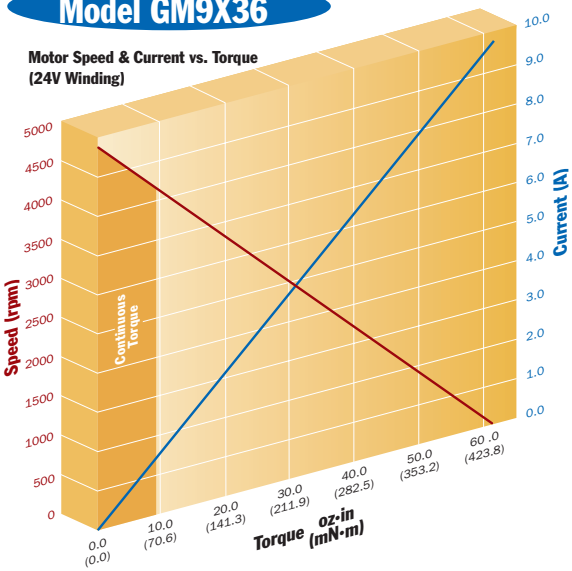

PITTMAN®

GM94XX Motor

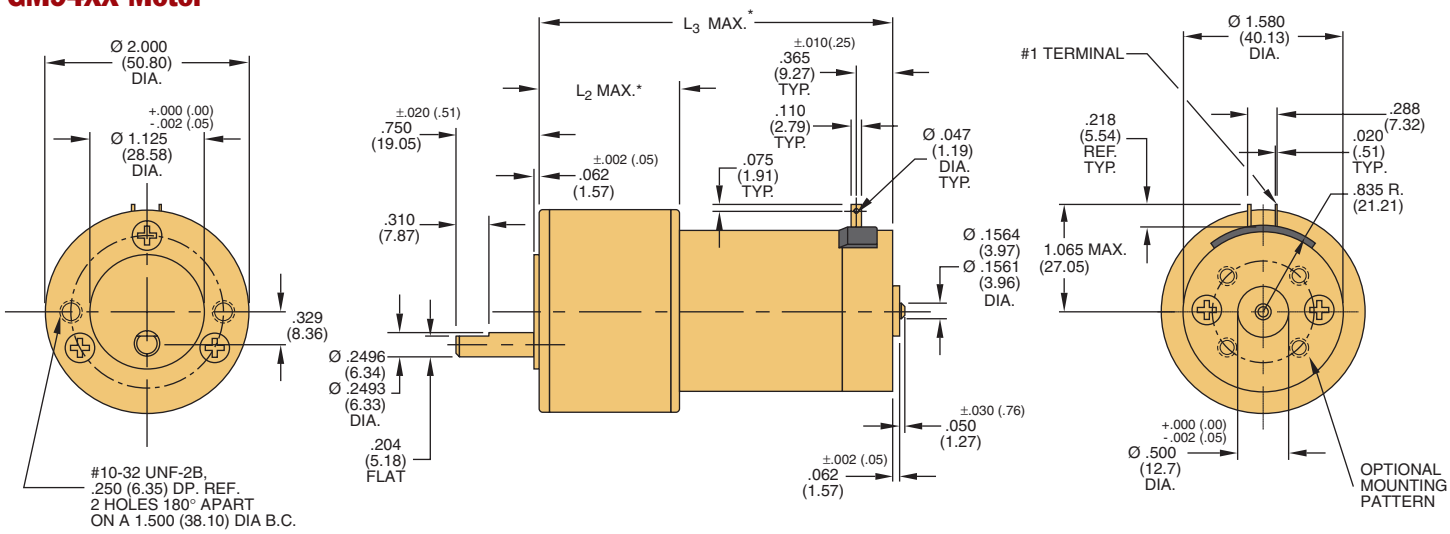

GM92XX Motor

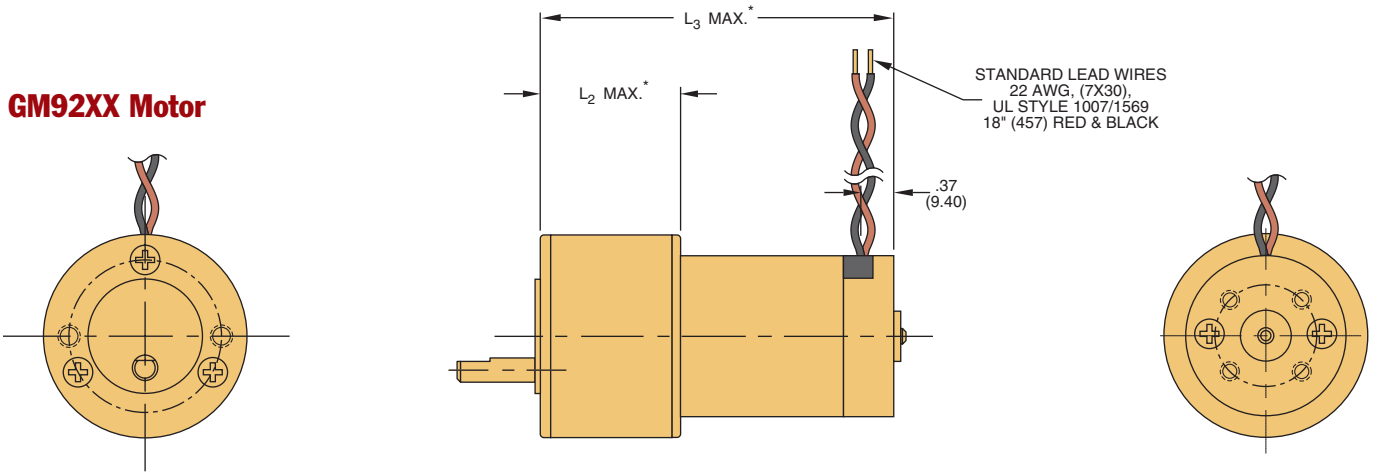

Notes:
- Unless otherwise specified, all tolerances are to be ±.005 (.01)
- All measurements are in inches (mm)

*See line numbers 6 through 11 and 17 through 21

GM94XX Motor with 91XX Encoder

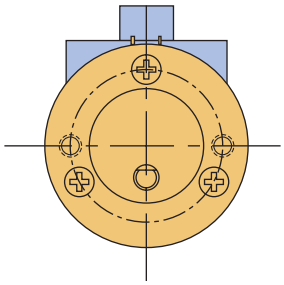

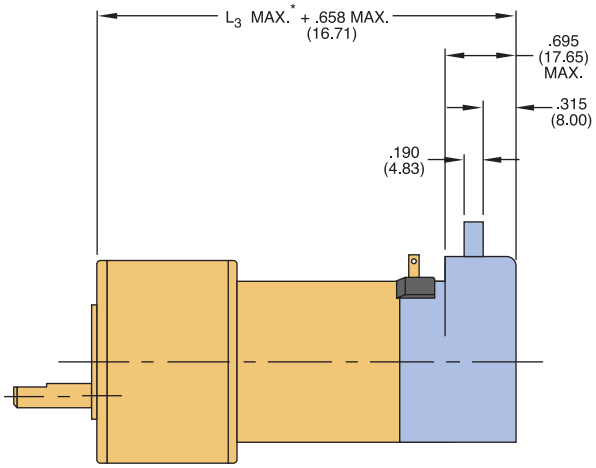

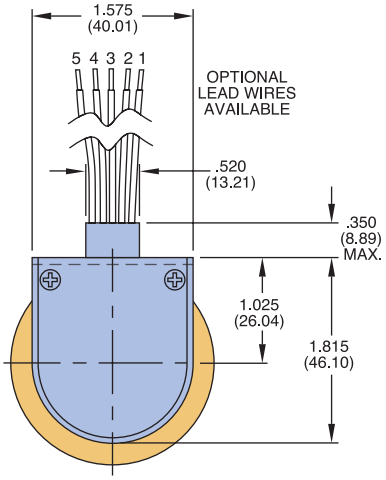

GM92XX Motor with 91XX Encoder

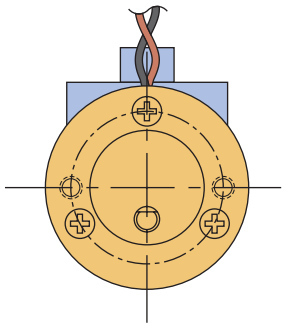

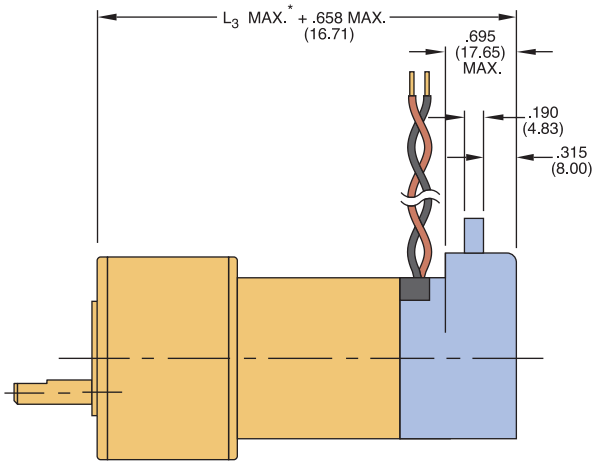

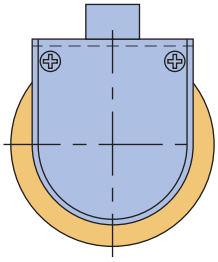

Encoder Connection Chart

Pin No.	Color	Connection
1	Black	Ground
2	Green	Index/NC
3	Yellow	Channel A
4	Red	Vcc
5	Blue	Channel B

Notes:
- Unless otherwise specified, all tolerances are to be ±.005 (.01)
- All measurements are in inches (mm)

*See line numbers 6 through 11 and 17 through 21

PITTMAN®

Gearmotor Data

Line No.	Parameter	Symbol	Units	Reduction Ratios 5.9:1	19.7:1	65.5:1*
MECHANICAL SPECIFICATIONS (Standard and High-Torque Gears)						
1	Max. Load Standard Gears[1]	T_L	oz·in (N·m)	175 (1.24)	175 (1.24)	175 (1.24)
2	Max. Load High-Torque Gears[1]	T_L	oz·in (N·m)	N/A N/A	300 (2.12)	300 (2.12)
3	Gearbox Shaft Rotation[2]	—	—	CW	CCW	CW
4	Gearbox Efficiency	—	%	81	73	66
5	Gearbox Weight (Mass)	W_G	oz (g)	5.90 (167.3)	6.26 (177.5)	6.62 (187.7)
6	Gearbox Length	L_2	in max (mm max)	1.373 (34.87)	1.373 (34.87)	1.373 (34.87)
7	Length, GM14901	L_3	in max (mm max)	4.322 (109.78)	4.322 (109.78)	4.322 (109.78)
8	Length, GM14902	L_3	in max (mm max)	4.572 (116.13)	4.572 (116.13)	4.572 (116.13)
MECHANICAL SPECIFICATIONS (High-Torque, Wide-Face Gears)						
9	Max. Load[1]	T_L	oz·in (N·m)	N/A N/A	500 (3.53)	500 (3.53)
10	Gearbox Shaft Rotation	—	—	CW	CCW	CW
11	Gearbox Efficiency	—	%	81	73	66
12	Gearbox Weight (Mass)	W_G	oz (g)	N/A N/A	6.52 (184.8)	6.88 (195.0)
13	Gearbox Length	L_2	in max (mm max)	N/A N/A	1.373 (34.87)	1.373 (34.87)
14	Length, GM14901	L_3	in max (mm max)	N/A N/A	4.322 (109.78)	4.322 (109.78)
15	Length, GM14902	L_3	in max (mm max)	N/A N/A	4.572 (116.13)	4.572 (116.13)
NO-LOAD SPEED (All Gears)						
16	GM14901	S_{NL}	rpm (rad/s)	713 (75)	214 (22)	64.2 (7)
17	GM14902	S_{NL}	rpm (rad/s)	690 (72)	207 (22)	62.1 (6)

[1]Represents gearbox capability only. Continuous load torque capability will vary with gear ratio, motor selection, and operating conditions.
[2]Shaft rotation is designated while looking at output shaft with motor operating in a clockwise direction. Gearmotor is polarity reversible.
*Contact factory for higher ratios.

Motor Data

Line No.	Parameter	Symbol	Units	14X01	14X02
18	Continuous Torque[3]	T_C	oz·in (N·m)	10.0 (70.6×10^{-3})	14.0 (98.9×10^{-3})
19	Peak Torque (Stall)	T_{PK}	oz·in (N·m)	62.8 (.44)	107 (.76)
20	Motor Constant	K_M	oz·in/√W (N·m/√W)	4.45 (31.4×10^{-3})	5.93 (41.9×10^{-3})
21	No-Load Speed	S_0	rpm (rad/s)	4230 (443)	4087 (428)
22	Friction Torque	T_F	oz·in (N·m)	1.20 (8.5×10^{-3})	1.20 (8.5×10^{-3})
23	Rotor Inertia	J_M	oz·in·s^2 (kg·m^2)	1.6×10^{-3} (1.13×10^{-5})	2.3×10^{-3} (1.62×10^{-5})
24	Electrical Time Constant	τ_E	ms	0.91	1.47
25	Mechanical Time Constant	τ_M	ms	11.4	9.26
26	Viscous Damping— Infinite Source Impedance	D	oz·in/krpm (N·m/(rad/s))	0.17 (1.15×10^{-5})	0.17 (1.15×10^{-5})
27	Viscous Damping— Zero Source Impedance	K_D	oz·in/krpm (N·m/(rad/s))	14.7 (9.91×10^{-4})	26.0 (1.75×10^{-3})
28	Maximum Winding Temperature	θ_{MAX}	°F (°C)	311 (155)	311 (155)
29	Thermal Impedance	R_{TH}	°F/watt °C/watt	49.8 (9.90)	48.2 (9.00)
30	Thermal Time Constant	τ_{TH}	min	22.0	24.0
31	Motor Weight (Mass)	W_M	oz (g)	20.8 (589.7)	26.0 (737.1)
32	Motor Length, 1410X, 1420X	L_1	in max (mm max)	2.953 (75.01)	3.203 (81.36)

[3]Continuous torque specified at 25°C ambient temperature and without additional heat sink.

Model GM14X01/GM14X02 Winding Data (Other windings available upon request)

Line No.	Parameter	Symbol	Units	GM14X01				GM14X02			
33	Reference Voltage	E	V	12.0	19.1	24.0	30.3	12.0	19.1	24.0	30.3
34	Torque Constant	K_T	oz·in/A (N·m/A)	3.72 (26.3×10^{-3})	5.89 (41.6×10^{-3})	7.44 (52.5×10^{-3})	9.46 (66.8×10^{-3})	3.90 (27.5×10^{-3})	6.16 (43.5×10^{-3})	7.80 (55.1×10^{-3})	9.85 (69.6×10^{-3})
35	Back-EMF Constant	K_E	V/krpm (V/rad/s)	2.75 (26.3×10^{-3})	4.36 (41.6×10^{-3})	5.50 (52.5×10^{-3})	6.99 (66.8×10^{-3})	2.88 (27.5×10^{-3})	4.55 (43.5×10^{-3})	5.77 (55.1×10^{-3})	7.29 (69.6×10^{-3})
36	Resistance	R_T	Ω	0.72	1.76	2.79	4.45	0.45	1.09	1.73	2.74
37	Inductance	L	mH	0.63	1.59	2.54	4.10	0.63	1.58	2.54	4.05
38	No-Load Current	I_{NL}	A	0.52	0.33	0.26	0.20	0.49	0.31	0.24	0.19
39	Peak Current (Stall)[4]	I_P	A	16.7	10.8	8.60	6.80	26.4	17.5	13.9	11.1

[4]Theoretical values supplied for reference only.

Model GM14X01

Motor Speed & Current vs. Torque (24V Winding)

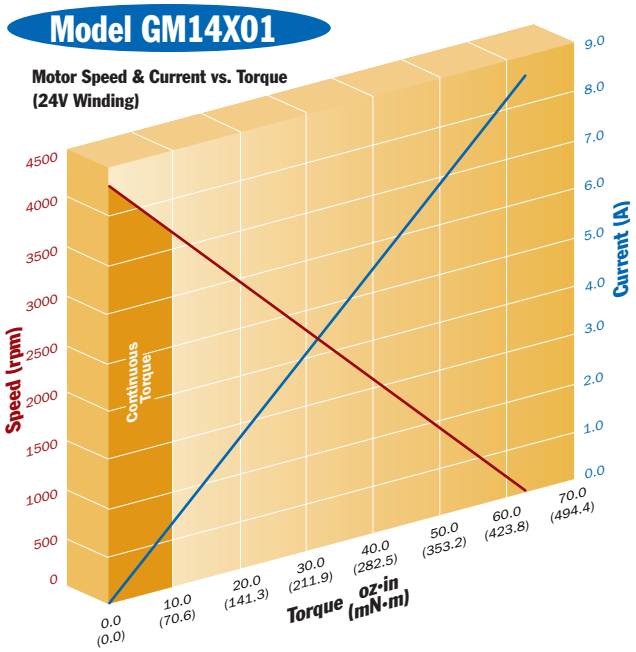

Model GM14X02

Motor Speed & Current vs. Torque (24V Winding)

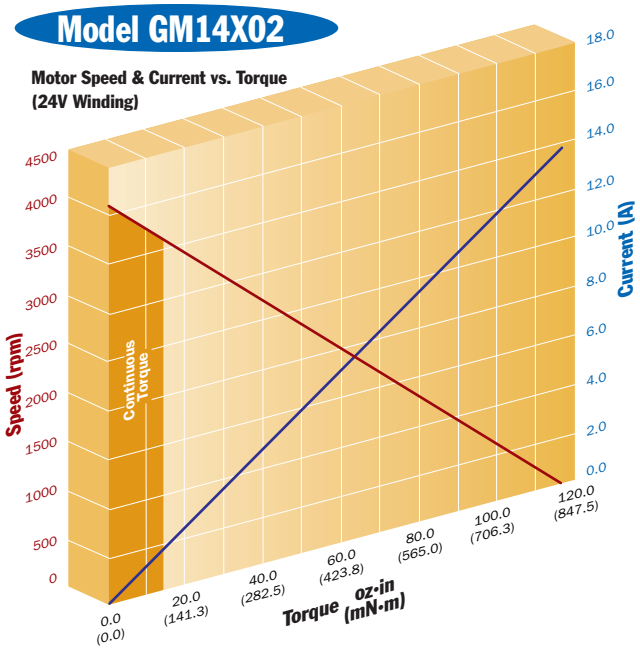

GM149XX Motor

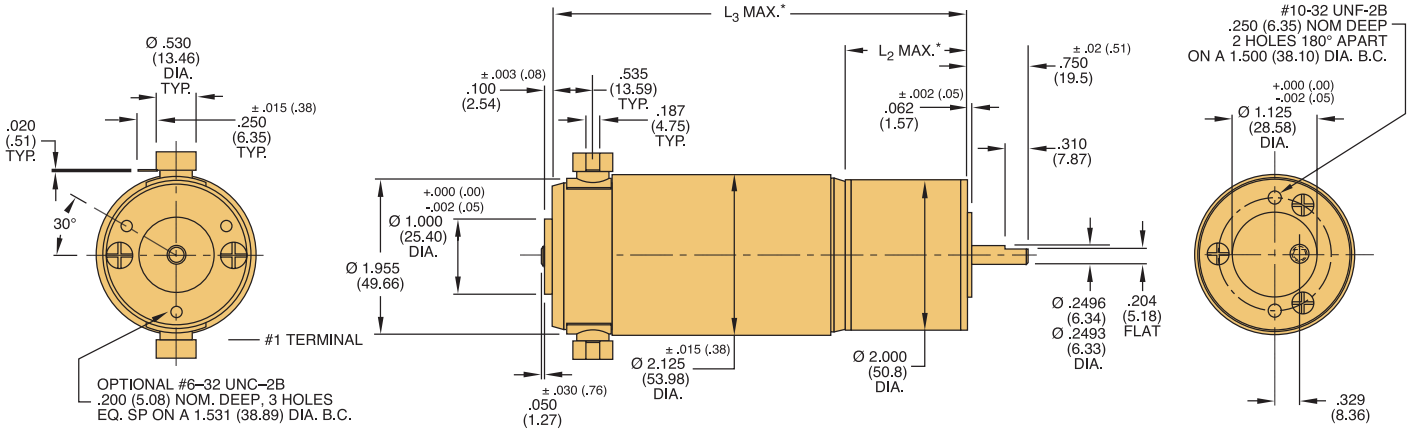

GM149XX Motor with 91X0 Encoder

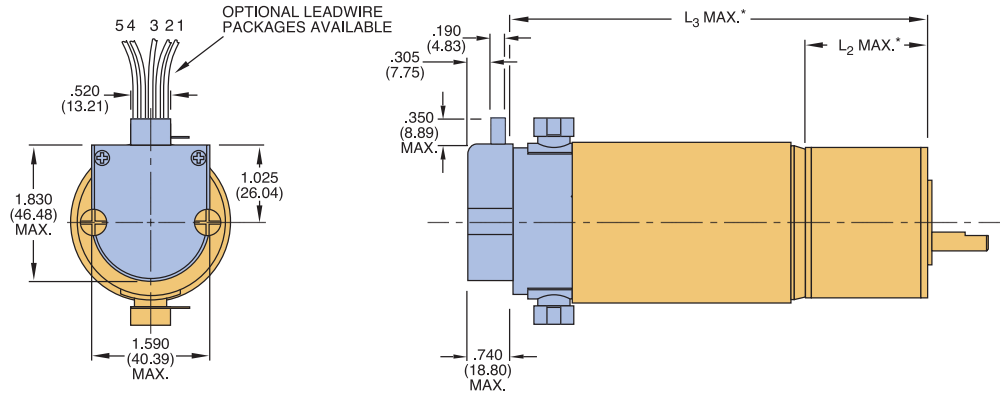

GM149XX Motor with 90X0 Encoder

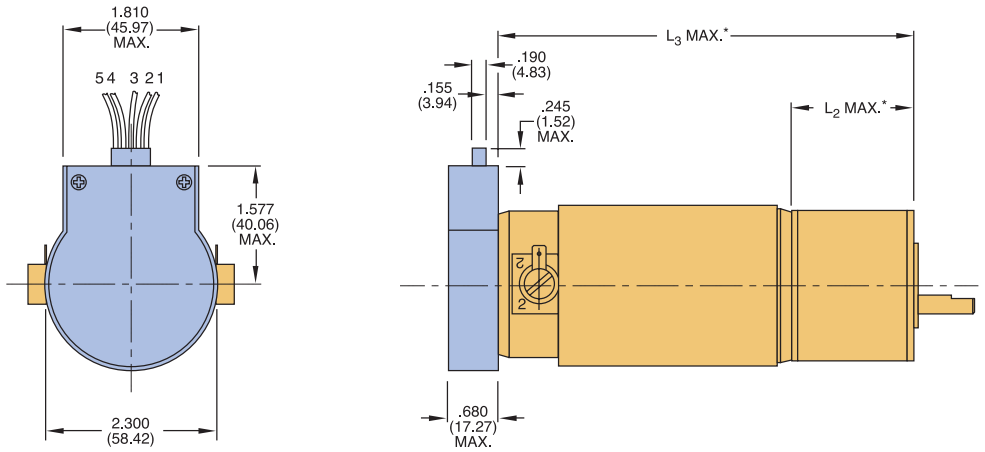

Encoder Connection Chart

Pin No.	Color	Connection
1	Black	Ground
2	Green	Index/NC
3	Yellow	Channel A
4	Red	Vcc
5	Blue	Channel B

Notes:
- Unless otherwise specified, all tolerances are to be ±.005 (.01)
- All measurements are in inches (mm)

*See line no. 6 through 8 and 13 through 15 in gearmotor data chart

PITTMAN®

Specifications subject to change without notice.

LCG-20

343 GODSHALL DRIVE
HARLEYSVILLE, PENNSYLVANIA 19438 U.S.A.
PHONE: 215-256-6601 • FAX: 215-256-1338
TOLL FREE: 877-PITTMAN (USA Only)
E-MAIL: info@pittmannet.com
WEB SITE: www.pittmannet.com

10/05