HS Series

Aluminum Housed Resistors

Manufactured in line with the requirements of MIL 18546 and IEC, designed for direct heatsink mounting with thermal compound to achieve maximum performance.



FEATURES

- High Power to volume
- Wound to maximize High Pulse Capability
- Values from R005 to 100K
- Custom designs welcome
- RoHS Compliant

CHARACTERISTICS

Tolerance (Code):	Standard ±5% (J) and ±10% (K). Also available ±1% (F), ±2% (G) and ±3% (H)
Tolerance for low Ω values:	Typically ≥ R05 ±5% ≤ R047 ±10%
Temperature coefficients:	Typical values < 1K 100ppm Std. > 1K 25ppm Std. For lower TCR's please contact Arcol
Insulation resistance (Dry):	10,000 MΩ minimum
Power dissipation:	At high ambient temperature dissipation derates linearly to zero at 200°C
Ohmic values:	From R005 to 100K depending on wattage size
Low inductive (NHS):	Specify by adding N before HS Series code, e.g. NHS50
NHS ohmic value:	Divide standard HS maximum value by 4
NHS working volts:	Divide standard HS maximum working voltage by 1.414

Temp. Rise & Power Dissipation

Surface temperature of resistor related to power dissipation. The resistor is standard heatsink mounted using a proprietary heatsink compound.

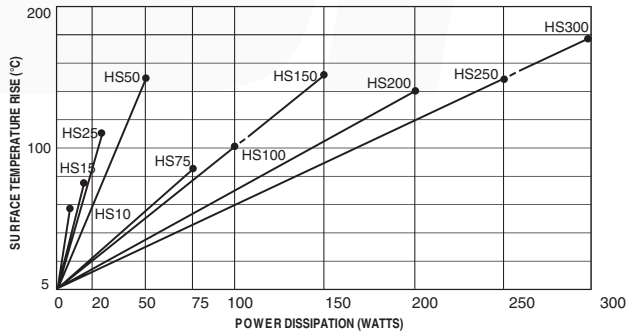

Heat Dissipation

Heat dissipation: Whilst the use of proprietary heat sinks with lower thermal resistances is acceptable, uprating is not recommended. For maximum heat transfer it is recommended that a heat sink compound be applied between the resistor base and heat sink chassis mounting surface. It is essential that the maximum hot spot temperature of 200°C is not exceeded, therefore, the resistor must be mounted on a heat sink of correct thermal resistance for the power being dissipated.

ORDERING INFORMATION

Standard Resistor

To specify standard: Series, Watts, Ohmic Value, Tolerance Code, e.g.

HS25 2R2 J

Non Inductive Resistor

To specify add N: e.g.

NHS100 10R J

HS Series

Aluminum Housed Resistors

ELECTRICAL SPECIFICATIONS

Size	Style MIL-R 18546	Power rating on std. heatsink @25°C	Watts with no heatsink @25°C	Resis-tance range	Limiting element voltage	Voltage proof AC Peak	Voltage proof AC rms.	Approx weight gms	Typical surface rise HS mounted	Standard heatsink	
										cm^2	Thickness mm
HS10	RE 60	10	5	R005-10K	160	1400	1000	4	5.8	415	1
HS15	RE 65	15	7	R005-10K	265	1400	1000	7	5.1	415	1
HS25	RE 70	25	9	R005-36K	550	3500	2500	14	4.2	535	1
HS50	RE 75	50	14	R01-86K	1250	3500	2500	32	3.0	535	1
HS75		75	24	R01-50K	1400	6363	4500	85	1.1	995	3
HS100		100	30	R01-70K	1900	6363	4500	115	1.0	995	3
HS150		150	45	R01-100K	2500	6363	4500	175	1.0	995	3
HS200		200	50	R01-50K	1900	7070	5000	475	0.7	3750	3
HS250		250	55	R01-50K	2200	7070	5000	600	0.6	4765	3
HS300		300	60	R01-68K	2500	7070	5000	700	0.6	5780	3

HS10-HS300 STANDARD RESISTOR

mm/(in.)

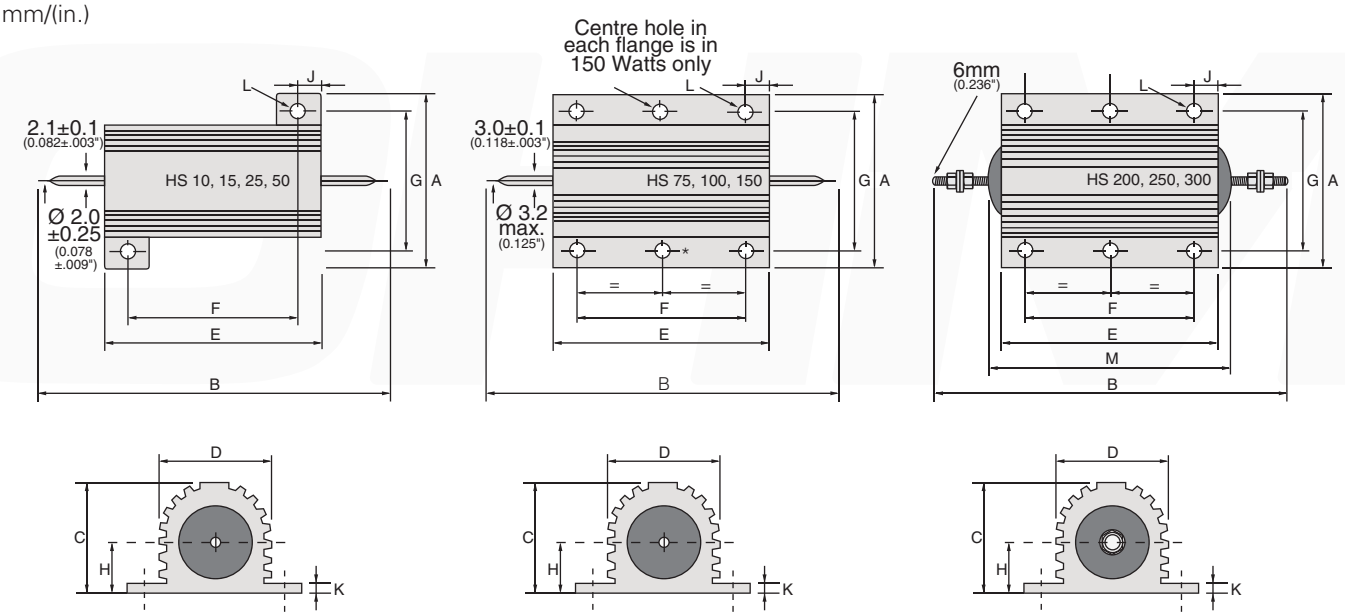

DIMENSIONS

mm/(in.)

Size	A Max	B Max	C Max	D Max	E Max	F±0.3 (0.011")	G±0.3 (0.011")	H Max	J Max	K Max	L ±0.25* (0.009")	M Max
HS10	16.5/0.649"	30.0/1.181"	8.8/0.346"	8.5/0.334"	15.9/0.625"	11.3/0.444"	12.4/0.488"	4.5/0.177"	2.4/0.094"	1.8/0.070"	2.4/0.094"	
HS15	21.0/0.826"	36.5/1.437"	11.0/0.433"	11.2/0.440"	19.9/0.783"	14.3/0.562"	15.9/0.625"	5.5/0.216"	2.8/0.110"	1.8/0.070"	2.4/0.094"	
HS25	28.0/1.102"	51.0/2.007"	14.8/0.582"	14.2/0.559"	27.3/1.074"	18.3/0.720"	19.8/0.779"	7.7/0.303"	5.2/0.204"	2.6/0.102"	3.2/0.125"	
HS50	28.0/1.102"	72.5/2.854"	14.8/0.582"	14.2/0.559"	49.1/1.933"	39.7/1.562"	21.4/0.842"	8.4/0.330"	5.2/0.204"	2.6/0.102"	3.2/0.125"	
HS75	47.5/1.870"	72.0/2.854"	24.1/0.948"	27.3/1.074"	48.7/1.917"	29.0/1.141"	37.0/1.456"	11.8/0.464"	10.4/0.409"	3.7/0.145"	4.4/0.173"	
HS100	47.5/1.870"	88.0/3.464"	24.1/0.948"	27.3/1.074"	65.2/2.566"	35.0/1.377"	37.0/1.456"	11.8/0.464"	15.4/0.606"	3.7/0.145"	4.4/0.173"	
HS150	47.5/1.870"	121.0/4.763"	24.1/0.948"	27.3/1.074"	97.7/3.846"	58.0/2.283"	37.0/1.456"	11.8/0.464"	20.4/0.803"	3.7/0.145"	4.4/0.173"	
HS200	72.5/2.854"	145.7/5.736"	41.8/1.645"	45.5/1.791"	89.7/3.531"	70.0/2.755"	57.2/2.251"	20.5/0.807"	10.4/0.409"	5.5/0.216"	5.1/0.200"	103.4/4.070"
HS250	72.5/2.854"	167.0/6.574"	41.8/1.645"	45.5/1.791"	109.7/4.318"	89.0/3.503"	57.2/2.251"	20.5/0.807"	10.4/0.409"	5.5/0.216"	5.1/0.200"	122.4/4.818"
HS300	72.5/2.854"	184.4/7.259"	41.8/1.645"	45.5/1.791"	127.7/5.027"	104.0/4.094"	59.0/2.322"	20.5/0.807"	12.4/0.488"	5.5/0.216"	6.6/0.259"	141.4/5.566"

* HS200-HS300 Watts is ± 0.45 (0.017")