THE SPECTROL DISTRIBUTOR CATALOG

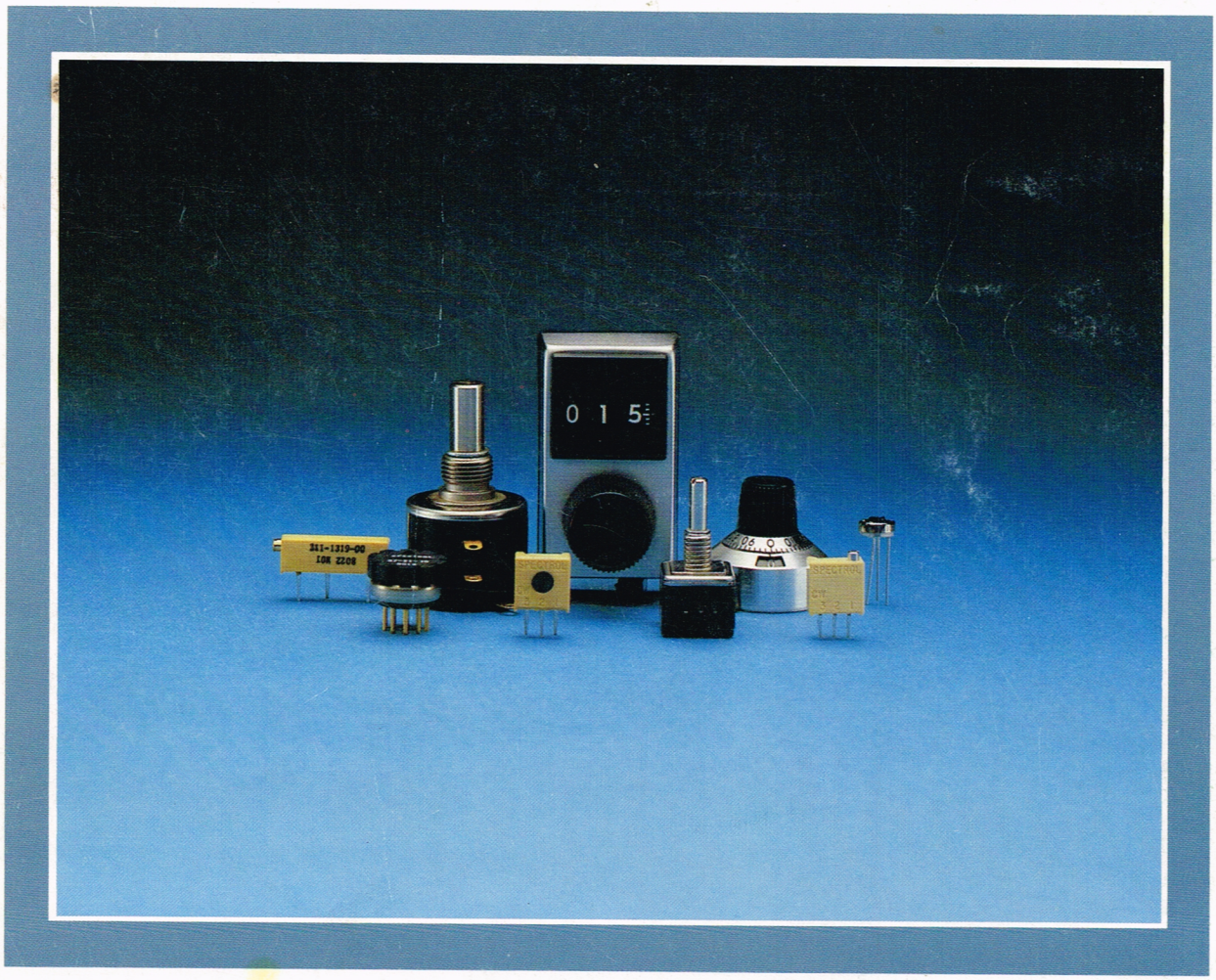

17/07/2023, 1.28

TURNBULL AND JONES LTD

NEW ZEALAND DISTRIBUTORS OF SPECTROL PRODUCTS
HEAD OFFICE
P.O. BOX 2012

CASA Modular! https://casamodularsystems.com/zenadmin/packingslip.php?oID=

CASA Modular Systems
66 Fitzherbert Street
5012 Petone, Wellington
New Zealand
Tel: +64 4 9393 777
Fax: Manual-Response Only

BILL TO: SHIP TO:

Distribution– Key to Spectrol Marketing

Spectrol fully appreciates the importance of distribution in marketing today. The modern distributor is much more than the "parts mover" of the past. A successful distributor must now be well informed in the technology he serves, and he often backs-up the factory and the local sales representative by helping his customers specify the correct products for their applications. He also frequently has various "add-on" capabilities to offer. But, of course, his primary role is still to stock and ship the standard fast-moving parts that his customers need when they need them—often the same day he receives the order.

Because distribution is so important, Spectrol closely examines the record and qualifications of all potential distributors and invites such

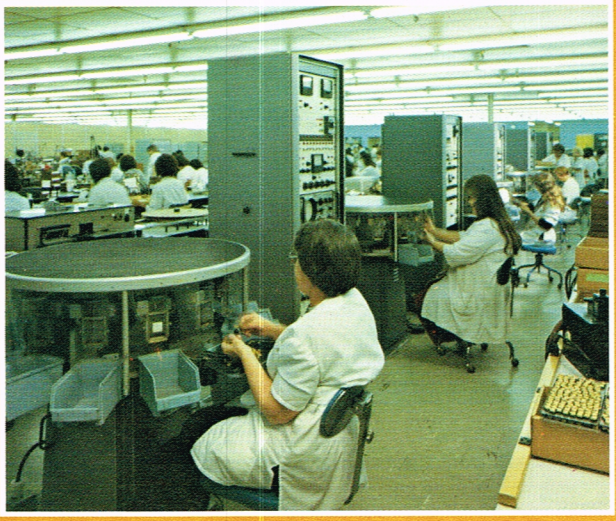

distributors to evaluate the company's distribution program as well. Therefore, the customer may be sure that his local Authorized Spectrol Distributor has fully earned his franchise by a record of outstanding performance. Together, Spectrol and its sales representatives and authorized distributors, comprise one of the finest marketing teams to serve the industry.

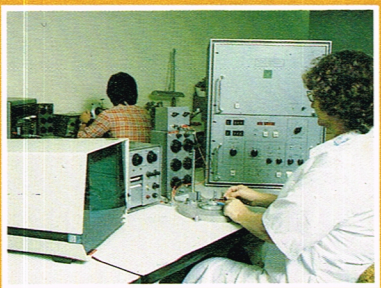

SPECTROL ELECTRONICS CORPORATION

DISTRIBUTOR CATALOG

Table of Contents

ALABAMA

HUNTSVILLE, 35807
Hall-Mark/Huntsville
4900 Bradford Drive
Phone: 205/837-8700
TWX: (810) 726-2187

HUNTSVILLE, 35805
RM Electronics
4702 Governors Dr. S.W.
Phone: 205/852-1550

ARIZONA

PHOENIX
Kierulff Electronics
4134 E. Wood St., 85040
Phone: 602/243-4101

Sterling Electronics
2001 E. University Dr., 85034
Phone: 602/258-4531
TELEX: 667-317

CALIFORNIA

ANAHEIM, 92805
R. V. Weatherford Co.
1550 Babbitt Avenue
Phone: 714/634-9600

GLENDALE, 91201
R. V. Weatherford Co.
6921 San Fernando Road
Phone: 213/849-3451
TWX: (910) 498-2223

IRVINE, 92714
Eric Electronics
2691 Richter, Suite 116
Phone: 714/957-3247

LOS ANGELES, 90040
Kierulff Electronics
2585 Commerce Way
Phone: 213/725-0325
TWX: (910) 580-3106

MOUNTAIN VIEW, 94043
Abacus Electronics
1065 Terra Bella Avenue
Phone: 415/961-1500
TWX: (910) 379-3936

PALO ALTO
Eric Electronics
1121 San Antonio Road, 94303
Phone: 415/969-4500

Kierulff Electronics
3969 E. Bayshore Rd., 94302
Phone: 415/968-6292
TWX: (910) 379-6430

POMONA, 91766
R. V. Weatherford Co.
1095 E. 3rd Street
Phone: 714/623-1261

SAN DIEGO
Kierulff Electronics
8797 Balboa Avenue, 92123
Phone: 714/278-2112
TWX: (910) 335-1182

Cetec Electronics 92111
4617 Ruffner St., Suite 101
Phone: 714/278-5020

R. V. Weatherford Co.
7872 Raytheon Rd., 92111
Phone: 714/278-7400

SAN JOSE, 95131
Cetec Electronics
721 Charcott Avenue
Phone: 408/263-7373

SOUTHGATE, 90280
Cetec Electronics
5610 E. Imperial Hwy.
Phone: 213/773-6521

TUSTIN, 92680
Kierulff Electronics
14101 Franklin Avenue
Phone: 714/731-5711

VENTURA, 93003
Bond Electro Sales
1766 E. Thompson Blvd.
Phone: 805/653-6487

CANADA

DON MILLS, ONTARIO M3B 2R4
Saynor Electronics, Ltd.
99 Scarsdale Rd.
Phone: 416/445-2340
TELEX: 6966576

MONTREAL, H4N 1J4
Deskin Sales
290 Benjamin Hudon St.
Phone: 514/331-2860

VANCOUVER, V5X 2R5
Deskin Sales
272 S. W. Marine Dr.
Phone: 604/324-6331
TWX: (610) 922-5036

COLORADO

DENVER
Kierulff Electronics
10890 E. 47th Ave., 80239
Phone: 303/371-6500

Electronics Parts Co.
1212 S. Broadway, 80210
Phone: 303/744-1992

CONNECTICUT

EAST HAVEN, 06512
J. V. Electronics
690 Main St.
Phone: 203/469-2321

STRATFORD, 06497
U-Tronics Inc.
80 Century Drive
Phone: 203/378-4201

WALLINGFORD, 06492
Arrow Electronics
12 Beaumont Road
Phone: 203/265-7741

FLORIDA

FT. LAUDERDALE 33309
Arrow Electronics
1001 N. W. 62nd St.
Suite 108
Phone: 305/776-7790

PALM BAY, 32905
Arrow Electronics
115 Palm Bay Rd. NW
Bldg. 200
Phone: 305/725-1480

ST. PETERSBURG, 33702
Kierulff Electronics
3247 Tech Drive
Phone: 813/576-1966

GEORGIA

NORCROSS, 30071
Arrow Electronics
2979 Pacific Drive
Phone: 404/449-8252
TWX: (810) 766-0439

ILLINOIS

CHICAGO
Classic Components
3328 Commercial Ave.
Northbrook, 60062
Phone: 312/272-9550

Diplomat
1071 Judson
Bensenville, 60106
Phone: 312/595-1000

Kierulff Electronics
1536 Landmeier Rd.
Elk Grove Village, 60007
Phone: 312/640-0200
TWX: (910) 222-0351

Newark Electronics
500 North Pulaski Rd., 60624
Phone: 312/638-4411
TELEX: 25-3218

INDIANA

INDIANAPOLIS
Arrow Electronics
2718 Rand Rd., 46241
Phone: 317/243-9353
TWX: (810) 341-3119

Graham Electronics
133 S. Pennsylvania St.
46204
Phone: 317/634-8202
TWX: (810) 341-3481

RM Electronics
5545 W. Raymond St.
Suite K, 46241
Phone: 317/247-9701

LOUISIANA

METAIRE, 70002
Sterling Electronics
4613 Fairfield St.
Industrial Div.
Phone: 504/887-7610
TELEX: 58-328

MARYLAND

BALTIMORE, 21227
Arrow Electronics
4801 Benson Ave.
Phone: 301/247-5200
TWX: (710) 236-9005

MASSACHUSETTS

BILLERICA, 01821
Kierulff Electronics
13 Fortune Drive
Phone: 617/935-5134
TWX: (710) 327-1170

BOSTON, 01801
Arrow Electronics
Arrow Drive
Woburn
Phone: 617/933-8130
TWX: (710) 393-6770

NORWOOD, 02062
Gerber Electronics
Gerber Radio Supply Co., Inc.
128 Carnegie Row
Phone: 617/769-6000

WALTHAM, 02154
Sterling Electronics
411 Waverly Oaks Road
Phone: 617/894-6200

MICHIGAN

FARMINGTON, 48024
Diplomat
32708 W. Eight Mile Road
Phone: 313/477-3200

LIVONIA, 48150
RS Electronics
34443 Schoolcraft
Phone: 313/525-1155

WYOMING, 49508
RM Electronics
4310 Roger B. Chaffee Dr.
Phone: 616/531-9300

MINNESOTA

EDINA, 55435
Arrow Electronics
5230 73rd St.
Phone: 612/830-1800
TWX: (910) 576-3125

ST. PAUL, 55117
Gopher Electronics
222 Little Canada Rd.
Phone: 612/483-4450

MISSOURI

ST. LOUIS, 63132
Olive Electronics
9910 Page Blvd.
Phone: 314/426-4500

NEW HAMPSHIRE

MANCHESTER, 03103
Arrow Electronics
1 Perimeter Road
Phone: 603/668-6968
TWX: (710) 220-1684

NEW JERSEY

CAMDEN, 08102
General Radio Supply Co., Inc.
600 Penn Street at Bridge Plaza
Phone: 609/964-8560

MOORESTOWN, 08057
Arrow Electronics
Pleasant Valley Road
Phone: 609/235-1900

PERTH AMBOY, 08861
Sterling Electronics
774 Pfeiffer Blvd.
Phone: 201/442-8000

SADDLEBROOK, 07662
Arrow Electronics
285 Midland Avenue
Phone: 201/797-5800

TOTOWA, 07512
Diplomat
490 S. Riverview
Phone: 201/785-1830

NEW MEXICO

ALBUQUERQUE, 87106
Arrow Electronics
2460 Alamo Ave. SE
Phone: 505/243-4566
TWX: (910) 989-1679

ALBUQUERQUE, 87107
Sterling Electronics
3530 Pan American Frwy.
Phone: 505/345-6601

NEW YORK

BUFFALO, 14202
Summit Distributors
916 Main Street
Phone: 716/884-3450
TWX: (710) 522-1692
TELEX: 916-429

FARMINGDALE, 11779
Arrow Electronics
1860 Smithtown Avenue
Ronkonkoma, NY
Phone: 516/694-6800
TWX: (510) 224-6494

HAUPPAUGE, 11787
Prime Components
65 Engineers Road
Phone: 516/582-6258

ROCHESTER, 14623
Arrow Electronics
3000 S. Winton Road
Phone: 716/275-0300
TWX: (510) 253-4766

ROCHESTER, 14603
Rochester Radio
140 W. Main St.
Phone: 716/454-7800

SYRACUSE
Arrow Electronics
7705 Maltlage Dr.
Liverpool, 13088
Phone: 315/652-1000
TWX: (710) 545-0230

NORTH CAROLINA

WINSTON SALEM, 27102
Arrow Electronics
938 Burke Street
Phone: 919/725-8711

OHIO

COLUMBUS, 43212
Electronics Marketing Corp.
1150 W. Third Ave.
Phone: 614/299-4161
TWX: (810) 482-4621

DAYTON, 45439
Stotts-Friedman Co.
2600 East River Road
Phone: 513/298-5555

SOLON, 44139
Arrow Electronics
6238 Cochran Rd.
Phone: 216: 248-3990
TWX: (810) 427-9293

OKLAHOMA

TULSA, 74129
Quality Components
9934 E. 21st S.,
Phone: 918/664-8812

Radio, Inc.
1000 S. Main St. 74119
Phone: 918/487-9123

OREGON

BEAVERTON, 97005
Parrott Electronics
8058 S.W. Nimbus Drive
Phone: 503/641-3355

PORTLAND, 97229
Kierulff Electronics
14273 N.W. Science Pk. Dr.
Phone: 503/641-9150

PENNSYLVANIA

PITTSBURGH
Arrow Electronics
650 Seco Road
Monroeville, 15146
Phone: 412/856-7000

Barno Radio
5403 West Smithfield St.
McKeesport, 15135
Phone: 412/462-7575

SOUTH CAROLINA

GREENVILLE, 29607
Hammond Electronics
1035 Lowndes Hills Rd.
Phone: 803/233-4121

TENNESSEE

KNOXVILLE, 37920
Industrial Electronics
7209 Chapman Hwy.
Phone: 615/573-7135

TEXAS

ADDISON, 75001
Quality Components
4257 Kellaway Circle
Phone: 214/387-4949

AUSTIN, 78758
Quality Components
2427 Rutland Dr.
Phone: 512/835-0220

Sterling Electronics
2335 A. Kramer Lane,
Phone: 512/836-1341

DALLAS
Arrow Electronics
13715 Gamma Road, 75234
Phone: 214/386-7500

Hall-Mark Electronics
11333 Pagemill Road, 75243
Phone: 214/234-7300
TWX: (910) 867-4721

Sterling Electronics
11090 Stemmons Frwy., 75229
Phone: 214/243-1600

FT. WORTH, 76102
Allied Electronics
401 E. Eighth St.
Phone: 817/336-5401

HOUSTON
Arrow Electronics
10700 Corporate Dr.
Suite 100
Stafford, 77477
Phone: 713/491-4100
TWX: (910) 880-4439

Quality Components
6126 Westline, 77036
Phone: 713/772-7100

Sterling Electronics,
Industrial Div.
4201 Southwest Frw.,
Dock 2, 77027
Phone: 713/627-9800

UTAH

SALT LAKE CITY, 84115
Diplomat Alta
3007 S. W. Temple
Phone: 801/486-4134

VIRGINIA

RICHMOND, 23231
Sterling Electronics
4325 November Ave.
Phone: 804/226-2190

WASHINGTON

SEATTLE
Arrow Electronics
1059 Andover Park E.
Tukwila 98188
Phone: 206/575-0907
TWX: (910) 444-2017

Kierulff Electronics
1005 Andover Pk. E
Tukwila, 98188
Phone: 206/575-4420
TWX: (910) 444-2034

R. V. Weatherford Co.
541 Industry Dr., 98188
Phone: 206/575-1340

WISCONSIN

MILWAUKEE
Arrow Electronics
430 West Rawson Ave
Oak Creek, 53154
Phone: 414/764-6600

Classic Components
2925 So. 160th Street
New Berlin, 53151
Phone: 414/786-5300

SPECTROL ELECTRONICS GROUP

Spectrol Reliance Ltd.
Drakes Way
Swindon, Wiltshire, England
Swindon 21351 • TELEX: 44692

Spectrol Electronics Corporation
17070 E. Gale Ave., P.O. Box 1220
City of Industry, Calif. 91749, U.S.A.
(213) 964-6565 • TWX (910) 584-1314

SP Elettronica spa
Via Carlo Pisacane 7
20016 Pero (Milan) Italy
35 30 241 • TELEX: 330091

ALABAMA
HUNTSVILLE, 35805
Electronic Mktg. Assoc.
P.O. Box 5306
Phone: 205/837-7363
(also services MISSISSIPPI)

ARIZONA
SCOTTSDALE, 85251
Thom Luke Sales
2940 North 67th Place
Suite H
Phone: 602/941-1901
(also services CLARK and NYE COUNTIES, NEVADA)

CALIFORNIA
AGOURA, 91301
Astralonics
28194 Road Side Drive, Suite 3
Phone: 213/991-3602
TWX: (910) 494-4594

CITY OF INDUSTRY
17070 E. Gale Avenue, 91745
P.O. Box 1220, 91749
Phone: 213/964-6565
213/686-1280
TWX: (910) 584-1314
TELEX:670496
(services greater metropolitan LOS ANGELES area, SAN DIEGO and IMPERIAL COUNTIES

SAN DIEGO, 92111
Hadden Associates
4710 Ruffner St., Suite H
Phone: 714/565-9444
TWX: (910) 335-2057

SANTA CLARA, 95051
Factory Sales Office
3080 Olcott St., Suite 206A
Phone: 408/727-1956

COLORADO
DENVER, 80222
Lindberg Company
6140 E. Evans Avenue
Phone: 303/758-9033
TWX: (910) 931-2579
(also services WYOMING)

CONNECTICUT
NORTH HAVEN, 06473
Kitchen & Kutchin
605 Washington Ave.
Phone: 203/239-0212

FLORIDA
ALTAMONTE SPRINGS, 32701
Semtronic Associates
343 Whooping Loop
Phone: 305/831-8233

CLEARWATER, 33515
Semtronic Associates
300 S. Duncan Ave.
Suite 270
Phone: 813/461-4675

GEORGIA
NORCROSS, 30091
Electronic Mktg. Assoc.
P.O. Box 883
Phone: 404/449-1215

ILLINOIS
CHICAGO
Momak Sales
2320 Wisconsin Avenue
Downers Grove, 60515
Phone: 312/963-6400
TWX: (910) 695-3222

WHEELING 60090
Spectrol Mid Western
Regional Office
308 N. Wolf Rd. Suite 206
Phone: 312/459-8020

INDIANA
DAYTON, 45439
Luebbe Sales
3832 Kettering Blvd.
Phone: 513/294-0426
TWX: (810) 459-1779

IOWA
HIAWATHA, 52233
Gassner & Clark
P.O. Box 10
Phone: 319/393-5763
TWX: (910) 525-2051

KANSAS
SHAWNEE MISSION, 66214
BC Electronics
P.O. Box 12485
8190 Nieman Road
Phone: 913/888-6680

KENTUCKY
Luebbe Sales
2649 Erie Avenue
Cincinnati, Ohio 45208
Phone: 513/871-4211
TWX: (810) 461-2128

MARYLAND
Contact Eastern
Regional Office
Phone: 603/623-2920

MASSACHUSETTS
LEXINGTON, 02173
Kitchen & Kutchin
428 Marrett Road
Phone: 617/862-8230
TWX: (710) 326-0597
(also services MAINE, VERMONT, NEW HAMPSHIRE and RHODE ISLAND)

MICHIGAN
LIVONIA, 48152
Luebbe Sales
19500 Middlebelt Rd.
Phone: 313/477-3131

MINNESOTA
ST. PAUL, 55117
Murnco
219 Little Canada Road
Phone: 612/484-8200
TWX: (910) 563-3594
(also services NORTH DAKOTA, SOUTH DAKOTA, and WISCONSIN)

MISSOURI
ST. LOUIS, 63044
BC Electronics
4534 N. Lindberg Blvd.
Suite 501
Phone: 314/731-1255

NEW HAMPSHIRE
BEDFORD, 03102
Spectrol Eastern
Regional Office
160 S. River Rd. Suite 108
Phone: 603/623-2920

NEW JERSEY
HADDONFIELD, 08033
Sunday-O'Brien
15 Potter Street
Phone: 609/429-4013
TWX: (710) 896-0679
(also services southern NEW JERSEY, and eastern PENNSYLVANIA)

NEW MEXICO
ALBUQUERQUE, 87109
Lindberg Company
4163 Montgomery NE.
Phone: 505/881-1006
TWX: (910) 989-1675

NEW YORK
COMMACK, 11725
ERA
354 Veterans Memorial Hwy.
Phone: 516/543-0510
TWX: (510) 221-1849

ENDWELL, 13760
Spectrol Eastern
Regional Office
160 S. River Rd. Suite 108
Phone: 603/623-2920

FAIRPORT, 14450
Spectrol Eastern
Regional Office
160 S. River Rd. Suite 108
Phone: 603/623-2920

FAYETTEVILLE, 13066
Spectrol Eastern
Regional Office
160 S. River Rd. Suite 108
Phone: 603/623-2920

POUGHKEEPSIE, 12603
Spectrol Eastern
Regional Office
160 S. River Rd. Suite 108
Phone: 603/623-2920

NORTH CAROLINA
WINSTON-SALEM, 27101
Electronic Mktg. Assoc.
955 Burke Street Suite 2
Phone: 919/722-5151
TWX: (510) 931-3282
(also services TENNESSEE)

OHIO
CINCINNATI, 45208
Luebbe Sales
2649 Erie Avenue
Phone: 513/871-4211
TWX: (810) 461-2800

CLEVELAND, 44116
Luebbe Sales
21330 Center Ridge Rd.,
Room 11
Phone: 216/333-0425
TWX: (810) 421-8590

COLUMBUS, 43229
Luebbe Sales
6500 Busch Blvd.
Suite 210
Phone: 614/431-0474

DAYTON, 45439
Luebbe Sales
3832 Kettering Blvd.
Phone: 513/294-0426
TWX: (810) 459-1779

OKLAHOMA
TULSA, 74145
Allied Components, Inc.
9726 E. 42nd St. S. Suite 140
Phone: 918/496-8294

OREGON
BEAVERTON, 97005
Barrett Squibb & Assoc.
4480 S. W. Hall Blvd.
Phone: 503/644-2550
(Also Services Western Idaho)

PENNSYLVANIA
PITTSBURGH, 15235
Russell F. Clark Co.
10517 Lindberg Ave.
Phone: 412/242-9500
(also services WEST VIRGINIA and western PENNSYLVANIA)

SOUTH CAROLINA
GREENVILLE, 29609
Electronic Mktg. Assoc.
210 W. Stone Avenue
Phone: 803/233-4637

TEXAS

DALLAS, 75243
Allied Components
13771 N. Central Expressway
Suite 730
Phone: 214/238-0408
TWX: (910) 867-4783
(also services ARKANSAS and OKLAHOMA)

HOUSTON, 77036
Allied Components
9720 Town Park, Suite 110
Phone: 713/988-1600
(also services LOUISIANA)

HURST, 76053
Allied Components
231 Loop 820 NE
Phone: 817/589-0456

UTAH

SALT LAKE CITY, 84111
Lindberg Company
431 South 3rd East, Rm. 114
Phone: 801/534-1500
TWX: (910) 925-5265

(also services MONTANA and eastern IDAHO)

WASHINGTON

REDMOND, 98052
Barrett-Squibb & Assoc.
17090 Avondale Way N.E.
Phone: (206) 885-6991
TWX (910) 449-2595

WISCONSIN

EASTERN
Momak Sales
2320 Wisconsin Avenue
Downers Grove, 60515
Phone: (312) 963-6400
TWX: (910) 695-3222

WESTERN
Murnco
219 Little Canada Rd.
St. Paul, Minnesota 55117
Phone: (612) 484-8200

CANADA

MONTREAL, H4N 1J4
Deskin Sales
290 Benjamin Hudon St.
Phone: (514) 331-2860
TWX: (610) 421-3793
TELEX: 05-827584

MARKHAM, ONTARIO, L3R 2M4
Deskin Sales
77D Steelcase Rd. W.
Phone: (416) 495-1412
TWX: (610) 492-5113

VANCOUVER V5X 2R5
Deskin Sales
272 S.W. Marine Dr.
Phone: (604) 324-6331
TWX: (610) 922-5036

SPECTROL ELECTRONICS GROUP

Spectrol Reliance Ltd.
Drakes Way
Swindon, Wiltshire, England
Swindon 21351 • TELEX: 44692

Spectrol Electronics Corporation
17070 E. Gale Ave., P.O. Box 1220
City of Industry, Calif. 91749, U.S.A.
(213) 964-6565 • TWX (910) 584-1314

SP Elettronica spa
Via Carlo Pisacane 7
20016 Pero (Milan) Italy
35 30 241 • TELEX: 330091

ARGENTINA

(1067) BUENOS AIRES
Thiko S.A.
Peru 457-1°D
Phone: 33-4870/33-4676
TELEX: 17825

(1425) BUENOS AIRES
Noise S.R.L.
Mansilla 3991
Phone: 71-7181
TELEX: P. Booth 9
for Noise phone

AUSTRALIA

MELBOURNE, 3001
Total Electronics
310 Queen Street
G.P.O. Box 1286K
Phone: 67 9306
TELEX: 31261

AUSTRIA

A-1210 WIEN
Burisch GesmbH & Co. KG
Scheydgasse 31
Phone: 38 76 38
TELEX: 01-13310

BELGIUM

1020 BRUXELLES
Diode
Rue Picard 202
Phone: 01032-428-51-05
TELEX: 25903

BRAZIL

SAO PAULO SP
Concepal
Rua Santa Ifigenia, 378/380
CEP 01207
Phone: 221-0479
TELEX: 30743

COLOMBIA

BOGOTA
Teccien Ltda.
Cra. 7a #19-38 Of. 503
Apartado Aereo #45-07
Phone: 2417940
TELEX: 45323

DENMARK

COPENHAGEN N
E.V. Johanssen Elektronik A/S
Titangade 15
DK-2200
Phone: 451-83-90-22
TELEX: 16552

ECUADOR

MANTA
Prudent Traders, Inc.
202 Ensenadita
Phone: 4-610-775

NEW YORK, N.Y. 10017, U.S.A.
Prudent Traders, Inc.
50 East 42nd Street
Phone: (212) 682-1692
TELEX: 232 863

ENGLAND

HARLOW, ESSEX
ITT Electronic Services
Edinburgh Way
Phone: 0279 26811
TELEX: 81525

HENLOW, BEDFORDSHIRE
Intel Electronics
Henlow Trading Estate
Phone: 0462. 812505
TELEX: 825637

HERTFORDSHIRE SG4 OTN
Radio Resistor Co. Ltd.
P. O. Box 12
4 Trust Industrial Estate
Wilbury Way
Hitchin
Phone: 0462-54072
TELEX: 826251

SWINDON, WILTSHIRE SN3 3HY
Spectrol Reliance Ltd. (Factory)
Drakes Way
Phone: 21351
TELEX: 44692
Cable: Reltrol
Swindon

SIDCUP, KENT
Nobel Electronics Ltd.
Tudor Cottage
Footscray High Street
Phone: 01-309-0500
TELEX: 897250

EASTERN EUROPE

WESTFIELD, WEST LOTHIAN
ENGLAND EH48 4BU
C.A.T. Electrocomponents Ltd.
Southbank
Main Street
Phone: 0506-52713
TELEX: 727563

FINLAND

SF-00101 HELSINKI 10
Finneki T:MI
P. O. Box 133
Mannerheimintie 77B
Phone: 410266
TELEX: 12-2122
Cable: Finneki
Helsinki

FRANCE

SEVRES 92310
Tekelec-Airtronic S.A.
B.P. No. 2
Cite des Bruyeres
Rue Carle Vernet
Phone: 534-7535
TELEX: 204 552
250 997

GERMANY

1000 BERLIN 47
Aktiv Electronics GmbH
Ballinstrasse 12-14
Phone: 684-5088
TELEX: 185327

8050 FREISING
Texas Instruments GmbH
Haggertystrasse 1
Phone: 8161-801
TELEX: 526529

HAIDGRABEN 5
Componenta Elektronik-Bauelemente GmbH
8012 Ottobruhn Bei München
Phone: 089-6013008
TELEX: 05-23479

2000 HAMBURG 1
Balue Electronic
Burchardplatz 1
(Chilehaus)
Phone: (040) 330935/37
TELEX: 2161373

6800 MANNHEIM 31
Pueschel Electronic GmbH
Turbinenstrasse 24-28
Phone: 0621/739091
TELEX: 463608

8000 MUENCHEN 70
Spectrol Electronics GmbH
Factory Sales Office
Oberauerstrasse 15
Phone: 089-7145096/7/8
TELEX: 5213 014

GREECE

ATHENS T.T. 208
Makonik
A. Lucini & Sia O.E.
Platonos 15
AK Platonos
Phone: 522064
TELEX: 219150

GUATEMALA

GUATEMALA CITY
Prudent Traders, Inc.
3A Ave. 16-76 Zona 14

NEW YORK, N.Y. 10017
Prudent Traders, Inc.
50 East 42nd Street
Phone: (212) 682-1692
TELEX: 232 863

HOLLAND

3002 AK ROTTERDAM
Nedelko B.V.
Vierhavensstraat 46A
3029 B G Rotterdam
P. O. Box 6431
Phone: 010-765288
TELEX: 23057

HONG KONG

QUARRY BAY
Caduceus Industries Ltd.
Toppan Building, 6th Floor
22 Westlands Road
Phone: 5-632-113
TELEX: 83640

INDIA

MADRAS 600 020
Southern Electronics
31, Karpagam Gardens
Adyar
Phone: 412374
412943
412364
Cable: Elecomp
TELEX: 041-7692

ISRAEL

TEL-AVIV
CVS Technologies 1974, Ltd.
52462 Ramat Gan
54 Jabotinsky Street
Phone: 727 317
TELEX: 341363

ITALY

50123 FIRENZE
Paoletti-Ferrero S. d. F.
Via il Prato, 40/R
Phone: 29.49.74

50127 FIRENZE
Scoder
Rag. Pietrino Sebastiani
Via Odorico de Pordenone, 11/13
Phone: 364-192
TELEX: 58301

20133 MILANO
Comapel (main office)
Via Inama, 19
Phone: 726-954

MILANO
Lasi Elettronica S.p.A.
V. le Lombardia, 6
20092 Cinisello Balsamo
Phone: 6120 441/2/3/4/5
TELEX: 37612

20145 MILIANO
Orvem S.p.A.
Via Domodossola, 17
Phone: 349-4651
TELEX: 25631

20124 MILANO
Pasini Elettronica S. p. A.
Via A. Da Recanate, 4
Phone: 010392-2043276

80125 NAPOLI
Telelux Elettronica S.r.L.
Via Terracina, 311
Phone: 62.78.62

20016 PERO (MILANO)
SP Elettronica S.p.A. (Factory)
Via Carlo Pisacane, 7
Phone: 3530 241
3530 242
3530 243
3530 244
TELEX: 843-330091
Cable: Specelet
Milano

JAPAN

CHIYODA-KU, TOKYO
Nippon Miniature Bearing Co., Ltd.
No. 7, 3-Chome, Kanda,
Ogawa-Cho
Phone: 03-293-9251
TELEX: 222-2355

NEW ZEALAND

AUCKLAND
Turnbull & Jones Ltd.
Private Bag Otahuhu
27 Huia Road

CHRISTCHURCH
Turnbull & Jones Ltd.
P. O. Box 98
273 Cashel Street

WELLINGTON
Turnbull & Jones Ltd.
20 Barker Street
P. O. Box 9043
Phone: 850-629
TELEX: NZ3556
Cable: Turjon

NORWAY

OSLO 5
Henaco A/S
Okern Torgvei 13
P. O. Box 248
Phone: 15 75 50
TELEX: 16716

SCOTLAND

BOONBANK, AYR
SCOTLAND KA7 4DB
Nomis Electronics
20 Craig Stewart Crescent
Phone: 0292-43932

SINGAPORE

SINGAPORE 0820
NIE Electronics (M) Sdn. Bhd.
Unit 116, 1st Floor Singapore
Electrical Electronics and
Hardware Centre
101 Kitchener Road
Phone: 2585188
TELEX: RS21633

SOUTH AFRICA

JOHANNESBURG
Telcom Industries
Telcom House
343 Jan Smuts Avenue
Craighill
Phone: 011-788-1226

PINEGOWRIE, TRANSVAL 2123
Radiokom (1969) (Pty.) Ltd.
P. O. Box 56310
Phone: 48-5712
TELEX: 96080838

SPAIN

BARCELONA
Santos Del Valle
Avda. de Roma, No. 110
Phone: 254-4113

MADRID 15
Santos Del Valle
Galileo 56
Phone: 446-8141
446-8144
448-3959
TELEX: 42615

SWEDEN

S-123 05 STOCKHOLM-FARSTA
Gylling Teledata AB
Pepparvagen 27
Phone: 08-930120
TELEX: 17175

SWITZERLAND

CH-8037 ZURICH
Aumann & Company
Forrlibuckstrasse 150
Phone: 443300
TELEX: 56228

TAIWAN

TAIPEI, R.O.C.
Sea Union Eng. Ent. Ltd.
P. O. Box 45-95 Taipei
Room 303, Hua-Nan Bldg.
No. 162, Chang An E. Rd., 2nd Section
Phone: 7512062-3
TELEX: 24209

TURKEY

KARAKOY, ISTANBUL
Panc Elektronik Sanayi
Ticaret Anonim Sirketi
Bankalar Sair Ziya Pasa
Cad. No. 62-64
Phone: 44-41-20
Cable: Istanbul

YUGOSLAVIA

36100 VICENZA
Velco s.r.l.
Contra S. Francesco 75
Phone: 36444
TELEX: 431075

SPECTROL ELECTRONICS GROUP

Spectrol Reliance Ltd.
Drakes Way
Swindon, Wiltshire, England
Swindon 21351 • TELEX: 44692

Spectrol Electronics Corporation
17070 E. Gale Ave., P.O. Box 1220
City of Industry, Calif. 91749, U.S.A.
(213) 964-6565 • TWX (910) 584-1314

SP Elettronica spa
Via Carlo Pisacane 7
20016 Pero (Milan) Italy
35 30 241 • TELEX: 330091

WARRANTY

Seller warrants the goods to be delivered hereunder to be free from defects in material or workmanship for a period of one year from the date of delivery to Buyer. If within the period of such warranty Buyer promptly notifies Seller of any claimed defect and if requested by Seller returns such part or parts as are claimed defective, transportation charges prepaid, to Seller, and it appears to Seller that such part or parts are defective, Seller will at its option repair or replace the same with a like or similar part or parts at no expense to Buyer. Buyer shall be responsible for all transportation charges. If the component fails, for any reason, to comply with any purchase order, Seller may, at its sole option, remove the component at its own expense and, in full and final discharge of all liability, refund to Buyer all sums which shall have been paid by Buyer on account of the purchase price named herein. **IN NO EVENT SHALL SELLER BE LIABLE FOR INCIDENTAL OR CONSEQUENTIAL DAMAGES OF A COMMERCIAL NATURE.**

The repair or replacement of such defective part or parts by Seller SHALL CONSTITUTE THE SOLE REMEDY OF BUYER AND THE SOLE LIABILITY OF SELLER WHETHER ON WARRANTY, CONTRACT OR NEGLIGENCE. Upon expiration of such warranty period or in the event such goods are subjected to misuse, negligence, alteration, improper use or operated contrary to Seller's printed instructions, all liability of Seller shall cease.

THE WARRANTIES PROVIDED AND THE OBLIGATIONS AND LIABILITIES OF SELLER HEREUNDER, AND THE RIGHTS AND REMEDIES OF BUYER HEREUNDER ARE EXCLUSIVE AND IN SUBSTITUTION FOR, AND BUYER HEREBY WAIVES, ALL OTHER WARRANTIES, GUARANTEES, OBLIGATIONS, CLAIMS FOR LIABILITIES, RIGHTS AND REMEDIES, EXPRESS OR IMPLIED, ARISING BY LAW OR OTHERWISE, INCLUDING BUT NOT LIMITED TO THE IMPLIED WARRANTY OF MERCHANTABILITY AND FITNESS FOR PURPOSE.

THE FOREGOING WARRANTY IS EXCLUSIVE AND IN LIEU OF ALL OTHER WARRANTIES, EXPRESSED OR IMPLIED, INCLUDING THE WARRANTY OF MERCHANTABILITY AND FITNESS FOR PURPOSE.

ALLEN-BRADLEY/SPECTROL

ALLEN-BRADLEY	SPECTROL	ALLEN-BRADLEY	SPECTROL	ALLEN-BRADLEY	SPECTROL
A*	62/65	MT*	64	RT*	43
E*	63	N	70	S	53
		R	70	70	148/149

BECKMAN/SPECTROL

BECKMAN	SPECTROL	BECKMAN	SPECTROL	BECKMAN	SPECTROL
62	62	82	62/65	7246	534
63	64	89	43	7266	534
66	64	93	63T	7276	534
67	64	2601	16-3	7286	534
68	64	2606	16-1	7366	533
72	63	2607	16-2	7466	535
76P	43Y	5311	132	A	860
77P	43W	6181	157	C	830
78	70	7216	534	RB	21
79P	43P				

BOURNS/SPECTROL

BOURNS	SPECTROL	BOURNS	SPECTROL	BOURNS	SPECTROL
81/82	148/149	3292	64	3510	533
91/92	148/149	3299	64	3520	535
490	11	3329	62/65	3540	534
510	21	3339P	64Y	3543	533
3006	43	3386	63	3545	535
3009	43	3400	860	3700	162
3059	70	3500	534	3707	162
3069P	43W	3509	534		

CLAROSTAT/SPECTROL

CLAROSTAT	SPECTROL
73JA	534
388	148
389	149

CTS/SPECTROL

CTS	SPECTROL	CTS	SPECTROL	CTS	SPECTROL
164	64	191*	43W	345	62/65
165	64	192*	43Y	360	63
186	43	195	70	362	63
190*	43P	201	77	385	53
		260	76		

DALE/SPECTROL

DALE	SPECTROL	DALE	SPECTROL	DALE	SPECTROL
101T*	63P	150SX*	63V	784*	43
1015X*	63X	781*	43	1880*	40P
102T*	63M	783*	43	1887*	40L

DUNCAN/SPECTROL

DUNCAN	SPECTROL	DUNCAN	SPECTROL	DUNCAN	SPECTROL
61	16-1	86	11-1	3259	535
65	16-3	3253	534	3600	860
82	21-1	3256	533		

MEPCO ELECTRA/SPECTROL

MEPCO-ELECTRA	SPECTROL	MEPCO-ELECTRA	SPECTROL	MEPCO-ELECTRA	SPECTROL
8012	70	8024	64	8038	63
8014	62/65	8034	43	8050	62/65

VRN/SPECTROL

VRN	SPECTROL	IRC	SPECTROL	VRN	SPECTROL
450	70	180	62-1/65Y	5000	HEL05
76	63	181	62-3/65P	5001	140
100	84	182	62-2/65X	6800	534
170	62-1/65Y	752	64	8400	534
171	62-3/65P	960	43P	8403	533
172	62-2/65X	961	43	8500	534
		980	43W		
		989	43Y		

WESTON/SPECTROL

WESTON	SPECTROL	WESTON	SPECTROL	WESTON	SPECTROL
532	43W	548	64	567	62-3/65P
533	43P	830	43	568	62-2/65X
547	64P	840	63	1000	84
		566	62-1/65Y		

Note: This information is not meant to infer exact interchangeability in all instances, but in most cases, pin configuration and basic dimensions are similar.

*Models discontinued by Allen Bradley, CTS and Dale.

SPECTROL ELECTRONICS GROUP

Spectrol Reliance Ltd.
Drakes Way
Swindon, Wiltshire, England
Swindon 21351 • TELEX: 44692

Spectrol Electronics Corporation
17070 E. Gale Ave., P.O. Box 1220
City of Industry, Calif. 91749, U.S.A.
(213) 964-6565 • TWX (910) 584-1314

SP Elettronica spa
Via Carlo Pisacane 7
20016 Pero (Milan) Italy
35 30 241 • TELEX: 330091

See Page 11, headed "Warranty," the contents of which are made a part hereof and included herein by reference.

MODEL 6

ACTUAL SIZE

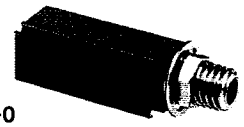

6-1-0

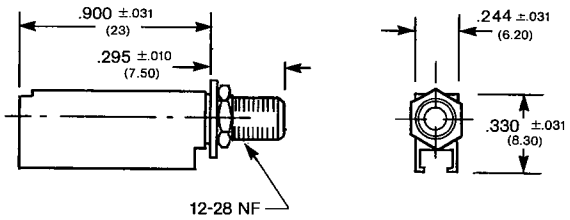

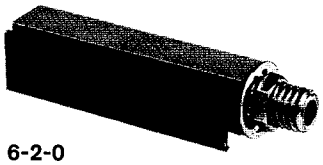

6-2-0

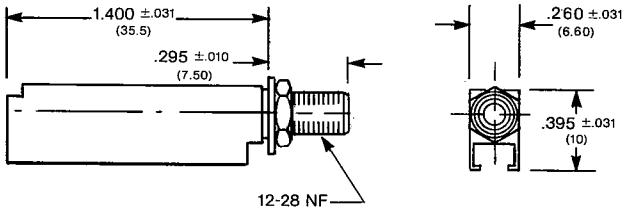

AVAILABLE SHAFT CONFIGURATIONS

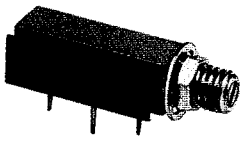

6-1-1

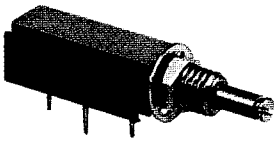

6-1-2

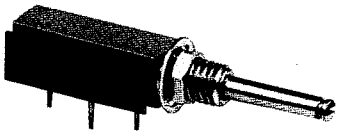

6-1-3

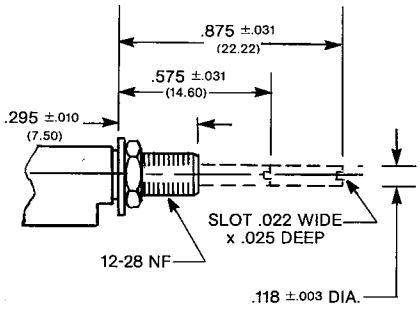

Shaft dimensions apply to 6-1-X and 6-2-X versions

BASIC DIMENSIONS ARE IN INCHES
MILLIMETER DIMENSION IN PARENTHESES

GENERAL DESCRIPTION

Spectrol's standard 3/4-inch and 1-1/4-inch rectangular trimming potentiometers, the Models 43 and 70, may be easily panel mounted through the use of Spectrol Model 6 Panel Mount Adapters. The adapters are designed to convert these standard trimmer models into panel mount trimmers in a quick, convenient, and economical manner. Assembly with the trimmer is accomplished by snap-in, providing for minimal installation time.

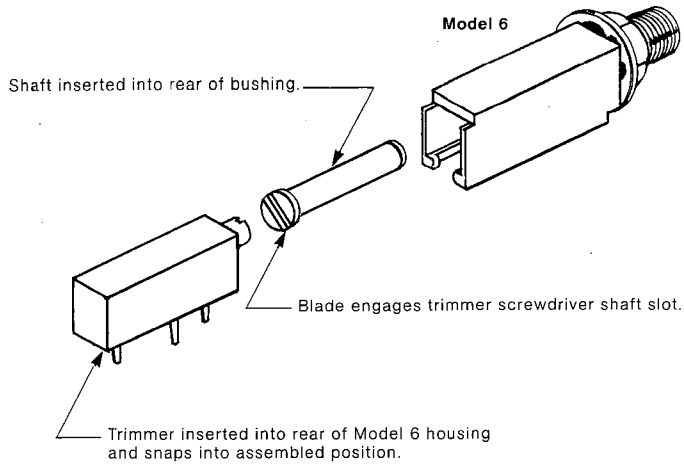

SPECIFICATIONS

CONSTRUCTION . . . . . Molded Polyester Plastic
BUSHING MATERIAL . . . . . Brass nickel plated
BUSHING HARDWARE . . . . . Panel nut and lock washer
OPTIONAL ADJUSTMENT
SHAFTS AVAILABLE (INCHES) . . . . . (1) Flush (2) .575 (3) .875

See photos and drawings for additional information.

HOW TO ORDER THE MODEL 6

6 – X – X

BASIC MODEL

TRIMMER SIZE

1. Fits Spectrol Model 43 or Trimmer .750 L, .190W, .250H
2. Fits Spectrol Model 70 or Trimmer 1.250 L, .190W, .315H

SHAFT EXTENSION

0. No Extra Shaft
1. Shaft Flush with Bushing
2. .575 Shaft Extension
3. .875 Shaft Extension

SPECTROL ELECTRONICS GROUP

Spectrol Reliance Ltd.
Drakes Way
Swindon, Wiltshire, England
Swindon 21351 • TELEX: 44692

Spectrol Electronics Corporation
17070 E. Gale Ave., P.O. Box 1220
City of Industry, Calif. 91749, U.S.A.
(213) 964-6565 • TWX (910) 584-1314

SP Elettronica spa
Via Carlo Pisacane 7
20016 Pero (Milan) Italy
35 30 241 • TELEX: 330091

See Page 11, headed "Warranty," the contents of which are made a part hereof and included herein by reference.

MODEL 8

- **EXTENDED AS WELL AS RECESSED BLADE FOR CRITICAL ADJUSTMENTS**
- **DESIGNED TO ADJUST TRIMMERS OF ALL SIZES**
- **AVAILABLE WITH CUSTOMER TRADEMARK**

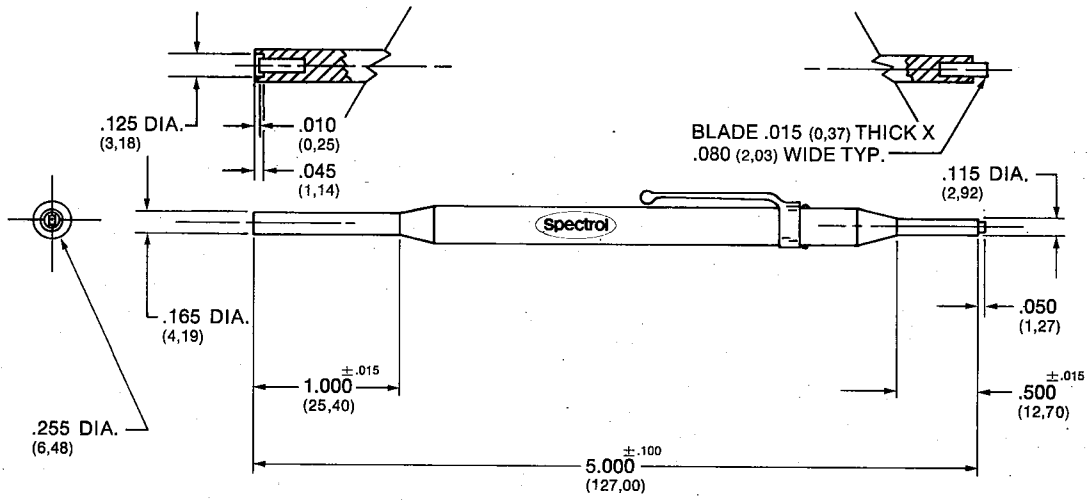

BASIC DIMENSIONS ARE IN INCHES
MILLIMETER DIMENSIONS IN PARENTHESES
TOLERANCES: UNLESS OTHERWISE NOTED
DECIMALS ±.005

SPECIFICATIONS: Material: Glass filled nylon body with corrosion resistant stainless steel blades.

HOW TO ORDER THE MODEL 8: The Model 8 adjustment tool can be ordered from this specification sheet by stating the part number and the required special features as follows:

8 T000

MODEL NUMBER
8

COLOR & TRADEMARK OPTION
T000 Spectrol Gold & Spectrol Trademark
T001 Spectrol Gold & Customer Trademark
T005 Spectrol Gold & No Trademark
T006 Same as T000 Except No Clip
T007 Same as T005 Except No Clip

For T001 please supply trademark with order

SPECTROL ELECTRONICS GROUP

Spectrol Reliance Ltd.
Drakes Way
Swindon, Wiltshire, England
Swindon 21351 • TELEX: 44692

Spectrol Electronics Corporation
17070 E. Gale Ave., P.O. Box 1220
City of Industry, Calif. 91749, U.S.A.
(213) 964-6565 • TWX (910) 584-1314

SP Elettronica spa
Via Carlo Pisacane 7
20016 Pero (Milan) Italy
35 30 241 • TELEX: 330091

MODEL 40

ACTUAL SIZE

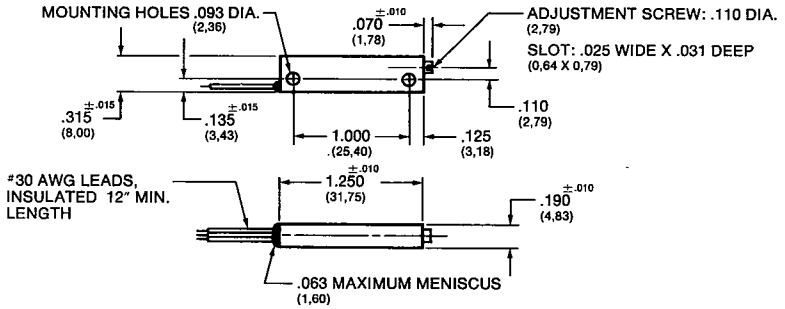

40LXXX
40LXXX T500 (RT12C2L)

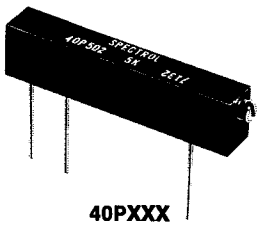

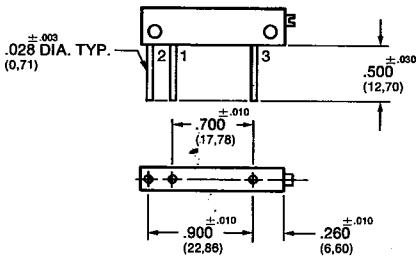

40PXXX
40PXXX T500 (RT12C2P)

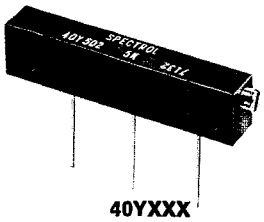

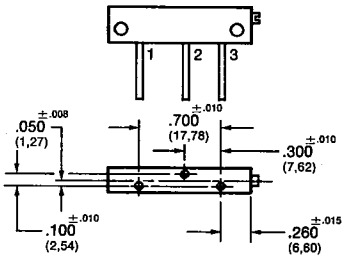

40YXXX
40YXXX T500 (RT12C2Y)

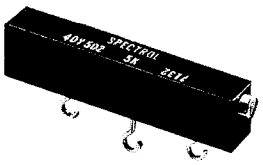

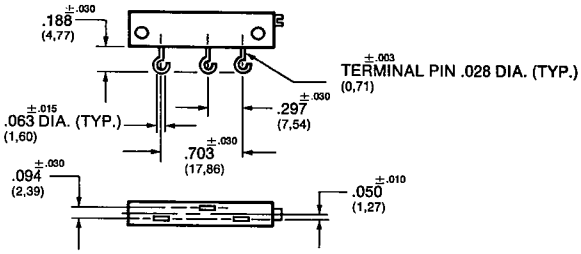

40YXXX T602

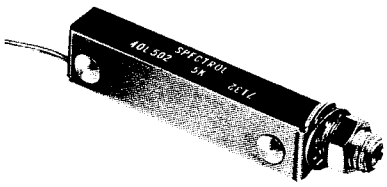

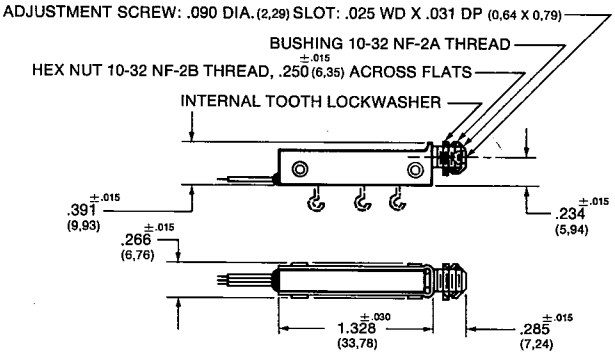

40LXXX T601
40YXXX T603

TOLERANCES: UNLESS OTHERWISE NOTED.
DECIMALS ±.005 ANGLES ±2°
BASIC DIMENSIONS ARE IN INCHES
MILLIMETER DIMENSION IN PARENTHESES

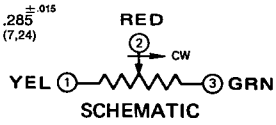

SCHEMATIC

SPECIFICATIONS: (per MIL-R-27208 where para. is noted)

ELECTRICAL

RESISTANCE RANGE	10Ω to 100 KΩ
ACTUAL EFFECTIVE ELECTRICAL TRAVEL	22 ±5 turns (para. 3.9)
RESISTANCE TOLERANCE	±5% (para. 3.7.1)
ABSOLUTE MINIMUM RESISTANCE	0.25% RT or 1Ω, whichever is greater (para. 3.7.2)
END RESISTANCE	2% Rt or 1.0 Ω, whichever is greater (para. 3.7.3)
TEMPERATURE COEFFICIENT OF RESISTANCE	50 PPM/°C max. (para. 3.15)
POWER RATING	1 watt at 70°C, derating linearly to zero watts at 175°C (para. 3.5)
DIELECTRIC WITHSTANDING VOLTAGE	1500 V AC at sea level, 350 V AC at 80,000 feet (24,400 meters) (para. 3.11)
INSULATION RESISTANCE	1,000 megohms (para. 3.12)
PEAK NOISE	100 Ω ENR, during adjustment (para. 3.10)

MECHANICAL

STOPS	Wiper idles against stops (para. 3.13.2)
OPERATING TORQUE	5.0 oz.-in. (360 gm-cm) maximum (para. 3.13.1)
ROTATIONAL LIFE	200 cycles min., with loaded circuit, max. resistance change not to exceed ±2% (para. 3.24); or 500 cycles without discontinuity unloaded
WEIGHT	0.12 oz. maximum (3.4 grams) except .15 oz. maximum (4.3 gr.) for Model 40L

ENVIRONMENTAL

MOISTURE RESISTANCE	Max. resistance change ± (1% + 0.05 Ω) insulation resistance ≥ 10 megohms (para. 3.16) RT style
VIBRATION	30 G's, 55 to 2000 Hz (para. 3.18)
SHOCK	100 G's, 6 ms (para. 3.17)
SALT SPRAY	96 hours (para. 3.19)
FUNGUS RESISTANCE	Non-nutrient (para. 3.3.1)
LOW TEMPERATURE OPERATION	−65°C (para. 3.22)
HIGH TEMPERATURE EXPOSURE	+175°C (para. 3.23)
LOAD LIFE	1,000 hours (para. 3.21)
TERMINAL STRENGTH	2 lbs. min. (900 gm) push/pull (para. 3.25)
EFFECT OF SOLDERING	Max. resistance change ± (1% + 0.05 Ω) (para. 3.20)
THERMAL SHOCK	−65°C to +125°C, max. resistance change ± (1% + 0.05 Ω) setting stability 1% plus resolution max. (para 3.14)
SEALED	All units sealed to permit cleaning in common solvents; immersion (para. 3.27) RT style

MARKING

UNIT IDENTIFICATION	Manufacturer's name and part number including EIA resistance code, date code, circuit diagram and military style designation as applicable.

RESISTANCE AND NOMINAL RESOLUTION VALUES

RESISTANCE (Ω)	RESOLUTION (%)	RESISTANCE (Ω)	RESOLUTION (%)
10	1.72	2,000	0.40
20	1.60	5,000	0.28
50	1.27	10,000	0.25
100	0.97	20,000	0.20
200	0.87	50,000	0.16
500	0.56	100,000	0.11
1000	0.50		

ORDERING CODE (TERMINAL AND OPTIONAL FEATURES)

The standard model number consists of three groups of digits. The first group is the Spectrol model number. The second group of one digit describes the type of electrical terminals. The third group is the standard EIA three digit resistance code. A fourth group is used if required to identify units that are DESC qualified (RT Version), or incorporate spec standard features.

MODEL NUMBER
40

TERMINAL STYLE
L
- L Leadwire (RT 12 Style L)
- P Printed circuit pins (RT 12 Style P)
- Y Printed circuit pins (RT 12 Style Y)

EIA RESISTANCE CODE
103
- L Number of zeros following second significant figure
- First significant figure

SPECIFICATION TYPE
T000
- T000 Standard per data sheet
- T601 Panel mount added to terminal style L
- T602 Solder hook pins (style Y)
- T603 Panel mount added to solder hooks (style Y)
- T500 DESC qualified unit per MIL-R-27208 (RT version)

From the above example, sample part number 40L103 T000 refers to a standard Model 40 with wire leads and a resistance of 10K. Part number 40Y203 T603 would refer to a Model 40 with solder hook pins with a resistance of 20K having a panel mount. Any unit having any features other than those specifically indicated under the example would be a spec model and require a factory quote.

ELECTRONICS GROUP

Spectrol Reliance Ltd.
Drakes Way
Swindon, Wiltshire, England
Swindon 21351 • TELEX: 44692

Spectrol Electronics Corporation
17070 E. Gale Ave., P.O. Box 1220
City of Industry, Calif. 91749, U.S.A.
(213) 964-6565 • TWX (910) 584-1314

SP Elettronica spa
Via Carlo Pisacane 7
20016 Pero (Milan) Italy
35 30 241 • TELEX: 330091

See Page 11, headed "Warranty," the contents of which are made a part hereof and included herein by reference.

MODEL 43

■ LOW PROFILE, ONLY ¼" OFF THE BOARD ■ LOW COST

■ BRUSH CONTACT AND UNIQUE "T" SLIDER BLOCK DESIGN ASSURE EXCELLENT SETABILITY AND STABILITY

■ CRV OF 3% OR 3Ω. ■ TEMPCO OF 100 PPM/°C ■ RT TOLERANCE ±10% STD (±5% AVAILABLE)

ACTUAL SIZE

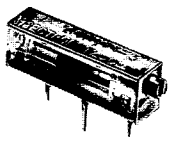

43 PXXX T040

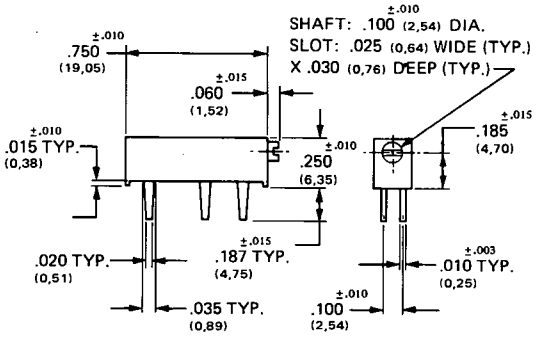

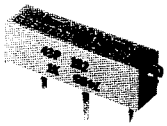

43 PXXX

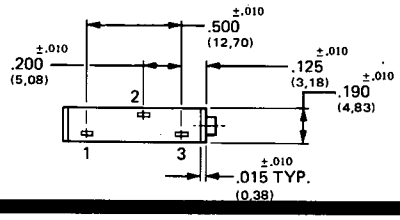

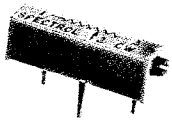

43 WXXX

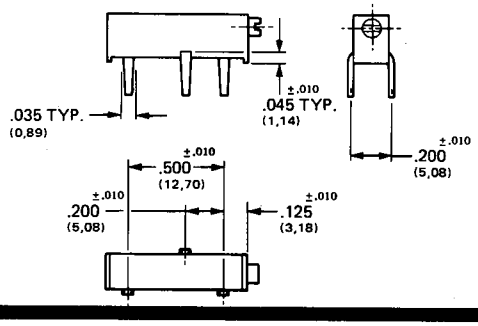

43 YXXX

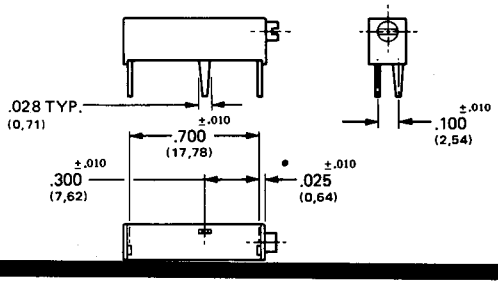

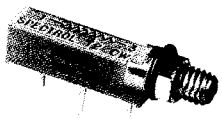

43 PXXX T601

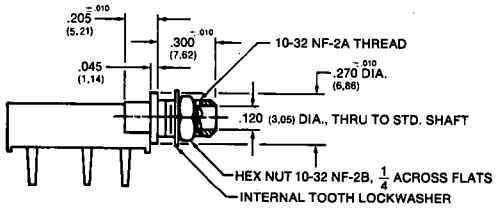

TOLERANCES: UNLESS OTHERWISE NOTED.
DECIMALS ± .005 ANGLES ±2°
BASIC DIMENSIONS ARE IN INCHES
MILLIMETER DIMENSIONS IN PARENTHESES

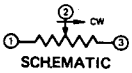

SCHEMATIC

SPECIFICATIONS: (per MIL-R-22097 where para. is noted)

ELECTRICAL

EFFECTIVE ELECTRICAL TRAVEL ... 20 turns nominal
RESISTANCE RANGE ... 10 ohms to 2 megohms
RESISTANCE TOLERANCE ... ±10%
END RESISTANCE ... 2 ohms maximum
TEMPERATURE COEFFICIENT OF RESISTANCE ... ±100 PPM/°C, 100 ohms to 2 megohms; −100 to +200 PPM/°C, 10 ohms, 20 ohms, and 50 ohms
POWER RATING ... 0.75 watt at 25°C derated linearly to zero watts at 125°C. Maximum voltage not to exceed 400V.
DIELECTRIC WITHSTANDING VOLTAGE ... 1000 V AC at sea level, 250 V AC at 80000 feet (24400 meters) (para. 3.10)
INSULATION RESISTANCE ... 1000 megohms minimum (para. 3.11)
CONTACT RESISTANCE VARIATION ... 3% or 3 ohms, whichever is greater (para. 3.9)

MECHANICAL

STOPS ... Wiper idles against stops
OPERATING TORQUE ... 5.0 oz-in. (360 gm-cm) maximum
ROTATIONAL LIFE ... 200 cycles minimum with a maximum change of ±2% in total resistance (para. 3.23)
WEIGHT ... 0.04 oz (1,2 gm) maximum
RESISTANCE ELEMENT ... Cermet

ENVIRONMENTAL

TERMINAL STRENGTH ... 2 lb (900 gm) minimum (para. 3.24)
SEALED ... Sealed to permit cleaning in common solvents

		Maximum Change Total Resis.	Setting
THERMAL SHOCK	−55° C to +125° C (para. 3.13)	2%	1%
SHOCK	100 G's 11MS (para. 3.16)	1%	1%
VIBRATION	30 G's 10 to 2000 Hz (para. 3.17)	1%	1%
LOAD LIFE	1000 hours (para. 3.20)	3%	1%
LOW TEMPERATURE OPERATION	−55° C (para. 3.21)	2%	2%
HIGH TEMPERATURE EXPOSURE	+125° C (para. 3.22)	3%	2%

MARKING

Manufacturer's name and part number including EIA resistance code, date code and schematic

RESISTANCE VALUES, OHMS

10	10,000
20	20,000
50	50,000
100	100,000
200	200,000
500	250,000
1,000	500,000
2,000	1 Meg
5,000	2 Meg

HOW TO ORDER THE MODEL 43

The Model 43 can be ordered from this specification sheet by stating:

MODEL NUMBER
43

TERMINAL STYLE
P
- P Printed circuit pins .100 (2,54) side spread
- W Printed circuit pins .200 (5,08) side spread
- Y Printed circuit pins .100 (2,54) side spread

RESISTANCE CODE
100
- 1 first significant figure
- 0 second significant figure
- 0 Number of zeros following

SPECIFICATION TYPE
T000
- T000 Standard per data sheet
- T040 Clear housing
- T050 O-ring seal
- T601 Panel mount (10-32 thd.)
- T602 Cemented on base riser (.240 high)
- T607 Cemented on base riser (.280 high)
- T615 Base riser (.280 high)
- T633 Base riser (.240 high)

All characteristics will be standard as described on this data sheet. If any other special characteristics are required, please contact the factory or your local Spectrol representative.

SPECTROL ELECTRONICS GROUP

Spectrol Reliance Ltd.
Drakes Way
Swindon, Wiltshire, England
Swindon 21351 • TELEX: 44692

Spectrol Electronics Corporation
17070 E. Gale Ave., P.O. Box 1220
City of Industry, Calif. 91749, U.S.A.
(213) 964-6565 • TWX (910) 584-1314

SP Elettronica spa
Via Carlo Pisacane 7
20016 Pero (Milan) Italy
35 30 241 • TELEX: 330091

See Page 11, headed "Warranty," the contents of which are made a part hereof and included herein by reference.

MODEL 50

ACTUAL SIZE

50-1-X
Insulated Leads

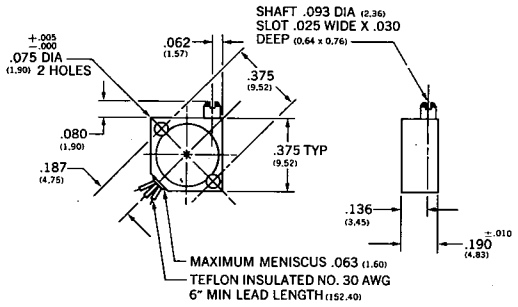

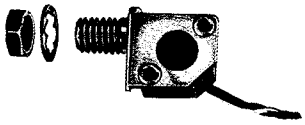

50-1-X -XXXP
Panel Mount

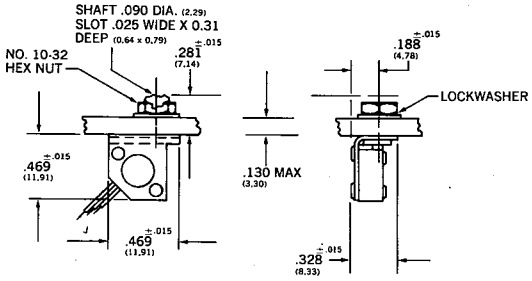

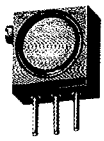

50-2-X
Pins 90° from Shaft

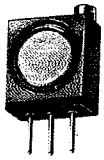

50-3-X
Pins 180° from Shaft

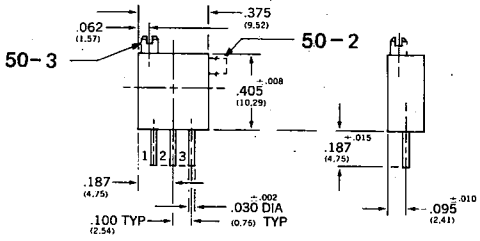

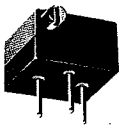

50-4-X
Pins from Base

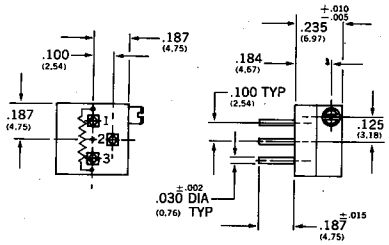

TOLERANCES: UNLESS OTHERWISE NOTED.
DECIMALS ± .005 ANGLES ±2°
BASIC DIMENSIONS ARE IN INCHES
MILLIMETER DIMENSIONS IN PARENTHESES

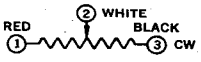

SPECIFICATIONS (per MIL-R-27208 where paragraph is noted.)

ELECTRICAL

RESISTANCE RANGE	10Ω to 50KΩ
ACTUAL EFFECTIVE TRAVEL	23 ±5 turns
RESISTANCE TOLERANCE	±5% (para. 3.7.1)
ABSOLUTE MINIMUM RESISTANCE	0.25% or 1Ω whichever is greater (para. 3.7.2)
END RESISTANCE	2% RT or 1Ω whichever is greater (para. 3.7.3)
POWER RATING	0.75 watt at 85°C derating linearly to zero watts at 150°C (para. 3.5)
TEMPERATURE COEFFICIENT OF RESISTANCE	50 PPM/°C maximum (para. 3.15)
DIELECTRIC WITHSTANDING VOLTAGE	500 V AC at sea level, 250 V AC at 80,000 feet (24400 meters); 900 V AC at sea level, 350 V AC at 70,000 feet (21300 meters) (50-4-4; -5,-10, 11, and -12 units only)
INSULATION RESISTANCE	1,000 megohms (para. 3.12)
PEAK NOISE	100Ω ENR, during adjustment (para. 3.10)

MECHANICAL

STOPS	Wiper idles against stops (para. 3.13.2), continuous rotation available
ROTATIONAL LIFE	200 cycles min., with loading circuit, total resistance change not to exceed ±2% (para. 3.24); or 1,000 full wiper revolutions unloaded without discontinuity for continuous rotation type
OPERATING TORQUE	5 oz.-in (360 GM-CM) maximum (Para. 3.13.1)
WEIGHT	0.053 oz (1.5 grams) maximum except 0.070 oz (2.0 grams) maximum for 50-1-1.

ENVIRONMENTAL

MOISTURE RESISTANCE	Resistance change ±(1% +0.05Ω) and insulation resistance not less than 10 megohms (para. 3.16)
VIBRATION	30 G's to 2,000 Hz (para. 3.18)
SHOCK	100 G's, 11 MS. (para. 3.17)
SALT SPRAY	96 hours (para. 3.19)
FUNGUS RESISTANCE	Non-nutrient (para. 3.3.1)
LOW TEMPERATURE MPERATURE OPERATION	−65 C (para. 3.22)
HIGH TEMPERATURE EXPOSURE	+150 C (para. 3.23)
LOAD LIFE	1,000 hours (para. 3.21)
TERMINAL STRENGTH	2 lbs. min. (900 grams) (Para 3.25)
EFFECT OF SOLDERING	Maximum resistance change ±(1% +0.05Ω) (para. 3.20)
THERMAL SHOCK	−65 C to +125 C, max. resistance change ±(1% +0.05Ω), setting stability 1% plus resolution max., (para. 3.14)
SEALED	Sealed to permit cleaning in common solvents; 1 minute ±5 sec. in 85°C +5° C − 0° C water (Para. 3.27) RT versions
MARKING	MANUFACTURER'S NAME AND PART NUMBER INCLUDING EIA RESISTANCE CODE AND DATE CODE

RESISTANCE AND NOMINAL RESOLUTION VALUES

RESISTANCE (Ω Nominal)	NOMINAL RESOLUTION (%)	RESISTANCE (Ω Nominal)	NOMINAL RESOLUTION (%)
10	1.26	1,000	.32
20	1.07	2,000	.28
50	.70	5,000	.24
100	.53	10,000	.19
200	.41	20,000	.13
500	.44	50,000	.11

ORDERING CODE (TERMINAL AND OPTIONAL FEATURES)

The part number consists of four groups of digits. The first group is the SPECTROL model number. The second group of one digit describes the type of electrical terminals. The third group (one to three digits) describes the adjustment screw type and other mechanical features. The fourth group is the standard EIA three digit resistance code.

example: **MODEL NUMBER** 50- **TERMINAL DESIGNATOR** 1-

1. Teflon insulated stranded leads 6" (152,4) long
2. Printed circuit pins 90° from shaft
3. Printed circuit pins 180° from shaft
4. Printed circuit pins from base (horizontal mount)

SHAFT AND OTHER FEATURES 1-

1. Slotted, fillister head shaft, continuous
2. .060 (1,52) dia. shaft flush with case, continuous.
4. Slotted, fillister head shaft, continuous, plastic case
10. Approved for MIL-R-27208 style RT24.
11. Fillister head shaft, stops clutch

RESISTANCE CODE 203

- 3 — Number of zeros following
- 0 — Second significant figure
- 2 — First significant figure

It can be seen from the example that the sample part number 50-1-1-203 refers to a Model 50 square trimmer with: Teflon insulated stranded leads; a slotted, fillister head shaft; continuous rotation and a resistance of 20K.
PANEL MOUNT: May be ordered by adding suffix letter "P" after resistance code (i.e. 50-1-1-203P)

ELECTRONICS GROUP

Spectrol Reliance Ltd.
Drakes Way
Swindon, Wiltshire, England
Swindon 21351 • TELEX: 44692

Spectrol Electronics Corporation
17070 E. Gale Ave., P.O. Box 1220
City of Industry, Calif. 91749, U.S.A.
(213) 964-6565 • TWX (910) 584-1314

SP Elettronica spa
Via Carlo Pisacane 7
20016 Pero (Milan) Italy
35 30 241 • TELEX: 330091

See Page 11, headed "Warranty," the contents of which are made a part hereof and included herein by reference.

MODEL 52

■ LOW COST ■ POSITIVE GEAR DRIVE ■ BRUSH CONTACT ■ SOLDERED TERMINATIONS
■ SUPERIOR SETABILITY AND STABILITY ■ TEMPCO OF ±100 PPM/°C ■ CRV OF 1½% OR 3Ω
■ MEETS IMMERSION TEST OF MIL-R-22097 ■ RESISTANCE TOLERANCE ±5%

ACTUAL SIZE

52 P

52 R

52 P

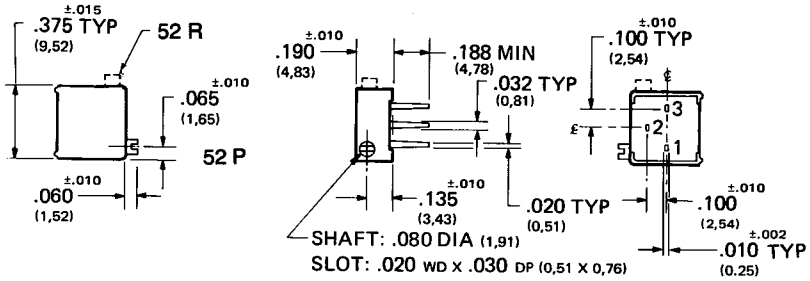

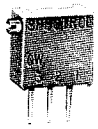

52 X

52 W

52 X

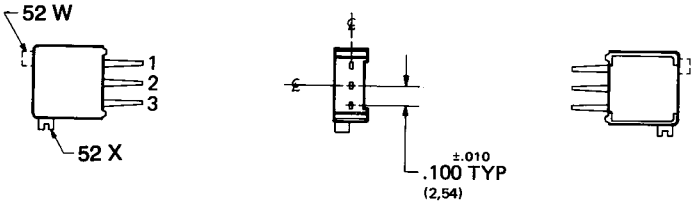

52 M

52 N

52 M

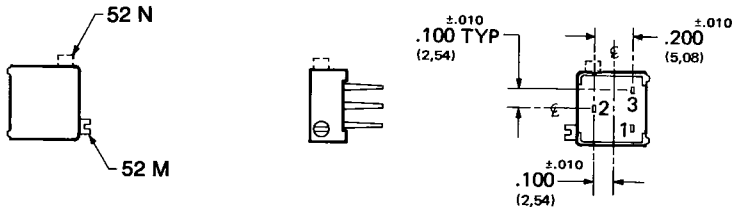

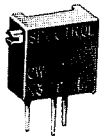

52 Z

52 Y

52 Z

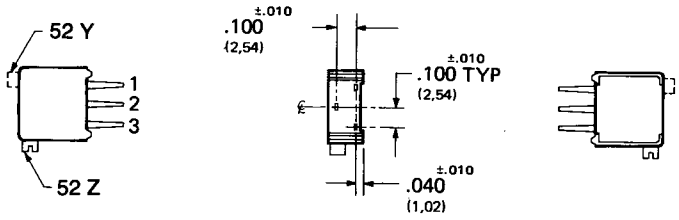

TOLERANCES: UNLESS OTHERWISE NOTED.
DECIMALS ± .005 ANGLES ±2°
BASIC DIMENSIONS ARE IN INCHES
MILLIMETER DIMENSIONS IN PARENTHESES

SCHEMATIC

SPECIFICATIONS (per MIL-R-22097 where para. is noted)

ELECTRICAL

EFFECTIVE TRAVEL ..... 25 turns nominal
RESISTANCE RANGE ..... 10Ω thru 2 meg ohms
RESISTANCE TOLERANCE 5%
END RESISTANCE ..... 2Ω or 1%, whichever is greater (Para. 3.7.2)
TEMPERATURE COEFFICIENT OF RESISTANCE ..... 100 ppm/°C, 100Ω thru 2 meg ohms; 0 to +250 ppm/°C, below 100Ω
POWER RATING ..... 0.5 watts at 85°C, derated linearly to zero watts at 150°C. maximum voltage not to exceed 400 V
DIELECTRIC WITHSTANDING VOLTAGE ..... 1000 vac at sea level, 250 vac at 80,000 feet (24400 meters) (Para. 3.10)
INSULATION RESISTANCE ..... 1000 megohms minimum (Para. 3.11)
CONTACT RESISTANCE VARIATION ... 1.5% or 3Ω, whichever is greater (Para. 3.9)

MECHANICAL

STOP ..... Contact idles at stops
OPERATING TORQUE ..... 5.0 oz-in (35.3n-mm) maximum
WEIGHT ..... 0.04 oz (1.13 grams) maximum
RESISTANCE ELEMENT ..... Cermet
SETABILITY ..... 0.05% RT

ENVIRONMENTAL

SOLDERABILITY ..... 95% minimum surface coverage ((Para. 3.25)
TERMINAL STRENGTH ..... 2 lbs. (900 grams) minimum (Para. 3.24)
IMMERSION ..... Meets immersion test per Para. 3.26

OPERATING TEMPERATURE RANGE .. −55°C to 150°C

		Maximum Change	
		Total Resis.	Setting
THERMAL SHOCK	−55°C to 150°C (Para. 3.13)	2%	1%
MOISTURE RESISTANCE	Mil-std 202, Method 103	2%	—
SHOCK	100 G's, 6 MS (Para. 3.16)	1%	1%
VIBRATION	30 G's, 10 to 2000 Hz ((3.17)	1%	1%
RESISTANCE TO SOLDER HEAT	350° C for 3 seconds (Para. 3.19)	1%	—
LOAD LIFE	1000 hours (Para. 3.20)	3%	1%
LOW TEMPERATURE OPERATION	−55°C (Para. 3.21)	2%	2%
HIGH TEMPERATURE EXPOSURE	+150°C (Para. 3.22)	3%	2%
ROTATIONAL LIFE	200 Cycles minimum (Para. 3.23)	2%	—

MARKING

UNIT IDENTIFICATION ..... Manufacturers name and part number including EIA resistance code, date code and terminal identification.

RESISTANCE VALUES, OHMS

10	200	5,000	50,000	500,000
20	500	10,000	100,000	1 MEG
50	1,000	20,000	200,000	2 MEG
100	2,000	25,000	250,000	

HOW TO ORDER THE MODEL 52

The standard model designation consists of three groups of characters. The first group is the Spectrol basic model number. The second group designates the terminal style. The third group is the standard 3 digit EIA resistance code. A fourth group is used only to identify spec standard or spec models; no designation for standard models is needed.

MODEL NUMBER
52

TERMINAL STYLE
P

- P Printed Circuit Pins: 0.100 (2,54) (TO-5 grid) w/adjustment parallel to board
- R Same as 52 P except optional shaft position
- W Printed Circuit Pins: 0.100 (2,54) inline on side center line w/adjustment perpendicular to board
- X Printed Circuit Pins: 0.100 (2,54) inline on side center line w/adjustment parallel to board
- M Printed Circuit Pins: 0.200 (5,08) grid with adjustment parallel to board
- N Same as 52 M except optional shaft position
- Y Printed Circuit Pins: 0.100 (2,54) (TO-5 grid) on side w/adjustment perpendicular to board
- Z Printed Circuit Pins: 0.100 (2,54) (TO-5 grid) on side w/adjustment parallel to board

EIA RESISTANCE CODE
103
- 3 — Number of zeros following
- 0 — second significant figure
- 1 — First significant figure

SPECIFICATION TYPE
T000
- T000 Standard per data sheet

From the above example, part number 52P 103 refers to a standard model 52, with P terminal style, printed circuit pins, adjustment parallel to board and resistance of 10K ohms. Any unit having features other than those specifically indicated above would be a spec model and requires a factory quote.

SPECTROL ELECTRONICS GROUP

Spectrol Reliance Ltd.
Drakes Way
Swindon, Wiltshire, England
Swindon 21351 • TELEX: 44692

Spectrol Electronics Corporation
17070 E. Gale Ave., P.O. Box 1220
City of Industry, Calif. 91749, U.S.A.
(213) 964-6565 • TWX (910) 584-1314

SP Elettronica spa
Via Carlo Pisacane 7
20016 Pero (Milan) Italy
35 30 241 • TELEX: 330091

See Page 11, headed "Warranty," the contents of which are made a part hereof and included herein by reference.

MODEL 53

ACTUAL SIZE

53-1-1
Round, Top Adjust

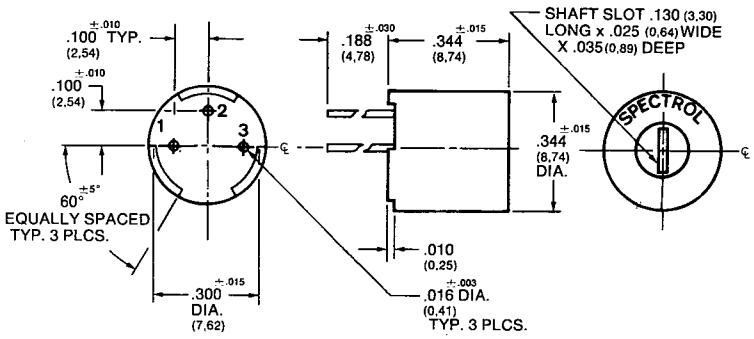

53-2-1
Cube, Side Adjust

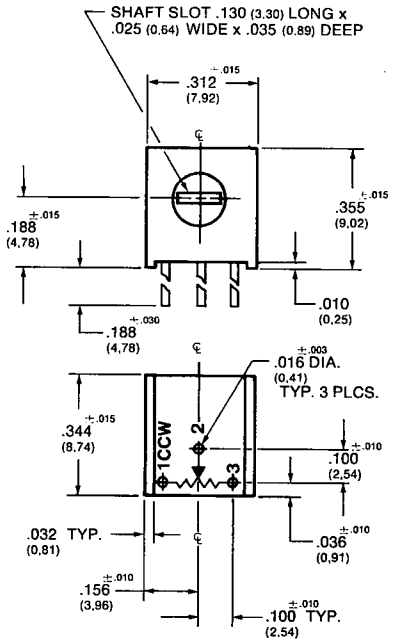

TOLERANCES: UNLESS OTHERWISE NOTED.
DECIMALS ±.005 ANGLES ±2°
BASIC DIMENSIONS ARE IN INCHES
MILLIMETER DIMENSION IN PARENTHESES

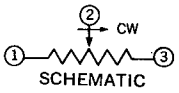

SCHEMATIC

SPECIFICATIONS: (Per MIL-R-22097 where para. is noted)

ELECTRICAL

ACTUAL EFFECTIVE TRAVEL	240° min.
RESISTANCE RANGE	10Ω to 1 megohm
RESISTANCE TOLERANCE	±20%
END RESISTANCE	1% R_T or 2Ω, whichever is greater
POWER RATING	0.5 watt at 85°C derated linearly to zero at 125°C. Maximum voltage not to exceed 400 volts across resistance element.
DIELECTRIC WITHSTANDING VOLTAGE	1000 V AC at sea level, 250 VAC at 80,000 feet (24,400 meters) (para. 3.10)
INSULATION RESISTANCE	1000 megohms
CONTACT RESISTANCE VARIATION	10% or 100Ω, whichever is greater
TEMPERATURE COEFFICIENT OF RESISTANCE	±100 ppm/°C, 100 Ω thru 1 meg ohms 0 to +400 ppm/° C, below 100 Ω

MECHANICAL

ADJUSTMENT	280° minimum, stop to stop
SHAFT TORQUE	5.0 oz-in (360 gm-cm) maximum
ROTATIONAL LIFE	200 cycles minimum without discontinuity
WEIGHT	0.05 oz (1.5 gm) maximum
STATIC STOP STRENGTH	10 oz-in (720 gr-cm) minimum

ENVIRONMENTAL

VIBRATION	30 G's to 2,000 Hz with a maximum change of 1% in total resistance and 1% in setting stability (para. 3.17)
SHOCK	100 G's 6 ms with a maximum change of 1% in total resistance and 1% in setting stability (para. 3.16)
SALT SPRAY	96 hours (para. 3.18)
FUNGUS RESISTANCE	Non-nutrient (para. 3.3.1)
LOW TEMPERATURE OPERATION	−65°C with a maximum change of 2% total resistance and 2% in setting stability (para. 3.21)
HIGH TEMPERATURE EXPOSURE	+125°C with a maximum change of 4% in total resistance and 2% in setting stability (para. 3.22)
LOAD LIFE	1000 hours with a maximum change of 4% in total resistance and 2% in setting stability (para. 3.20)
TERMINAL STRENGTH	2 lbs. (900 gm) minimum (para. 3.24)
SOLDERABILITY	450° ±10°F for 5 +1/2 sec. (para. 3.25)
THERMAL SHOCK	−65°C to 125°C, maximum resistance change ±4% setting stability 2% (para. 3.13)
SEALING	Sealed to permit cleaning in common solvents

MARKING

Manufacturer's name and part number including EIA resistance code and date code

RESISTANCE VALUES, OHMS		
10	1,000	50,000
20	2,000	100,000
50	5,000	200,000
100	10,000	250,000
200	20,000	500,000
500	25,000	1 MEG

ORDERING CODE

The part number consists of four groups of digits. The first group is the SPECTROL model number. The second group of one digit describes the location of electrical terminals. The third group describes the adjustment screw type and other mechanical features. The fourth group is the standard EIA three digit resistance code.

MODEL NUMBER
53—

TERMINAL DESIGNATOR
1—

1. Round configuration, screwdriver adjust, printed circuit pins 180° from shaft.
2. Cube configuration, screwdriver adjust, printed circuit pins 90° from shaft.

SHAFT AND OTHER FEATURES
1—

1. Slotted screwdriver shaft, stops, 20% RT, 10% or 100Ω CRV, whichever is greater.
2. Slotted screwdriver shaft, stops, 10% RT, 3% or 20Ω CRV, whichever is greater.

RESISTANCE CODE
203

- Number of zeros following
- Second significant figure
- First significant figure

It can be seen from the example that the sample part number 53-1-1-203 refers to the standard Model 53 trimmer in round configuration with printed circuit pins 180° from shaft head and a resistance of 20K.

SPECTROL ELECTRONICS GROUP

Spectrol Reliance Ltd.
Drakes Way
Swindon, Wiltshire, England
Swindon 21351 • TELEX: 44692

Spectrol Electronics Corporation
17070 E. Gale Ave., P.O. Box 1220
City of Industry, Calif. 91749, U.S.A.
(213) 964-6565 • TWX (910) 584-1314

SP Elettronica spa
Via Carlo Pisacane 7
20016 Pero (Milan) Italy
35 30 241 • TELEX: 330091

See Page 11, headed "Warranty," the contents of which are made a part hereof and included herein by reference.

MODEL 55

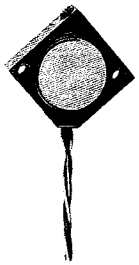

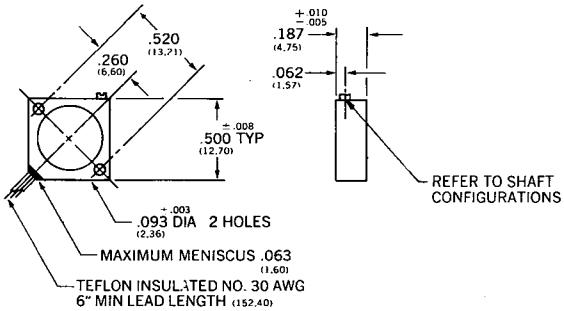

55-1-X
55-1-10 (RT22C2L)
Insulated Leads

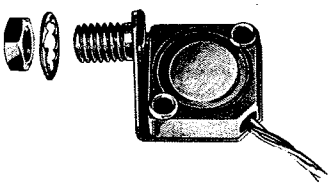

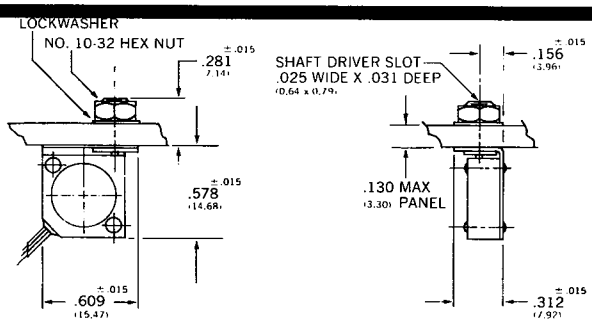

55-1-X-XXXP
Panel Mount

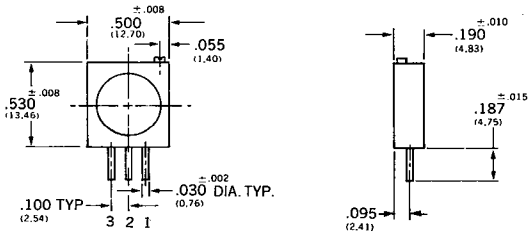

55-2-X
Pins 90° from Shaft
55-2-10 (RT22C2X)

55-3-X
Pins 180° from Shaft
55-3-10 (RT22C2W)

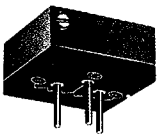

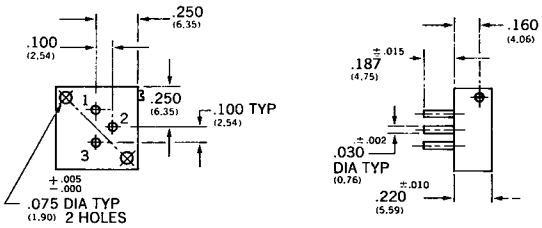

55-4-X

[**55-4-10**
55-4-20
(RT22C2P)]

TOLERANCES: UNLESS OTHERWISE NOTED.
DECIMALS ± .005 ANGLES ±2°
BASIC DIMENSIONS ARE IN INCHES
MILLIMETER DIMENSIONS IN PARENTHESES

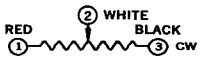

SPECIFICATIONS (per MIL-R-27208 where paragraph is noted.)

ELECTRICAL

RESISTANCE RANGE	10Ω to 50KΩ
ACTUAL EFFECTIVE TRAVEL	23 ±3 turns, 55-X-8; 55-X-10; 37 ±5 turns, 55-X-11; 55-X-12; 55-X-20 (para. 3.9)
RESISTANCE TOLERANCE	±5% (para. 3.7.1)
ABSOLUTE MINIMUM RESISTANCE	0.25% or 1 Ω, whichever is greater (para. 3.7.2)
END RESISTANCE	2% R_T or 1 Ω, whichever is greater (para. 3.7.3)
TEMPERATURE COEFFICIENT OF RESISTANCE	50 PPM/°C max. (para. 3.15)
DIELECTRIC WITHSTANDING VOLTAGE	900 V AC at sea level, 350 V AC at 80000 feet (24400 meters) (para. 3.11)
POWER RATING	1.5 watt at 70°C, derating linearly to zero watts at 150°C (para. 3.5)
INSULATION RESISTANCE	1000 megohms (para. 3.12)
PEAK NOISE	100Ω ENR, during adjustment (para. 3.10)

MECHANICAL

ROTATION	Wiper assembly idles against stops (para. 3.13.2) (continuous rotation available)
ROTATIONAL LIFE	200 cycles minimum, with loading circuit, total resistance change not to exceed ±2% (para. 3.24), or, 500 cycles min. without discontinuity unloaded
OPERATING TORQUE	5 oz-in (360 gm-cm) max. (para. 3.13.1)
WEIGHT	0.088 oz (2.5 gram) max.

ENVIRONMENTAL

MOISTURE RESISTANCE	Resistance change ±(1%+0.05Ω) and insulation resistance not less than 10 megohms (para. 3.16)
VIBRATION	30 G's to 2000 Hz (para. 3.18)
SHOCK	100 G's,6 MS. (para. 3:17)
SALT SPRAY	96 hours (para. 3.19)
FUNGUS RESISTANCE	Non-nutrient (para. 3.3.1)
LOW TEMPERATURE OPERATION	−65°C (para. 3.22)
HIGH TEMPERATURE EXPOSURE	+150°C (para. 3.23)
LOAD LIFE	1000 hours (para. 3.21)
TERMINAL STRENGTH	2 lbs. min. (900 grams) (para. 3.25)
EFFECT OF SOLDERING	Maximum resistance change ±(1% +0.05Ω) (para. 3.20)
THERMAL SHOCK	−65°C to +125°C, max. resistance change ±(1% +0.05Ω) setting stability 1% plus resolution max. (para. 3.14)
SEALING	Sealed to permit cleaning in common solvents: 1 minute ±5 sec. in 85°C (+5°C −0°C) water (para. 3.27) (RT versions)

MARKING

Manufacturer's name and part number including EIA resistance code

SHAFT CONFIGURATIONS

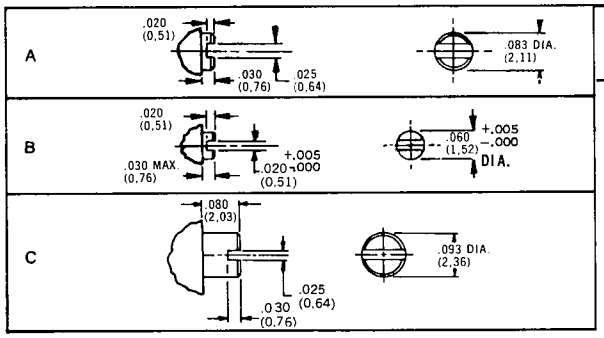

RESISTANCE AND NOMINAL RESOLUTION VALUES

RESISTANCE (Ω)	NOMINAL RESOLUTION (%)
10	.93
20	.69
50	.56
100	.42
200	.32
500	.24
1,000	.35
2,000	.20
5,000	.15
10,000	.12
20,000	.11
50,000	.08

ORDERING CODE (TERMINAL AND OPTIONAL FEATURES)

The part number consists of four groups of digits. The first group is the SPECTROL model number. The second group of one digit describes the type of electrical terminals. The third group (one or two digits) describes the adjustment screw type and other features. The fourth group is the standard EIA three digit resistance code.

example:

MODEL NUMBER

55 —

TERMINAL DESIGNATOR

1 —

1. Teflon Insulated Stranded Leads
2. Printed Circuit Pins 90° from Shaft
3. Printed Circuit Pins 180° from Shaft
4. Printed Circuit Pins from Base

SHAFT AND OTHER FEATURES

8 —

8. 25 Turn, Stops/Clutch, Type A Shaft, Lead Color RGY
10. 25 Turn, RT-22 Equivalent, RGY Type B Shaft
11. 42 Turn, Contin. Rotation, Type C Shaft, Lead Color RWB
12. 42 Turn, Contin. Rotation, Type B Shaft, Lead Color RWB
20. 42 Turn, RT 22 Equivalent, RGY Type B Shaft

RESISTANCE CODE

203

- No. of Zeros Following
- Second Significant Figure
- First Significant Figure

It can be seen from the example that sample part number 55-1-8-203 refers to the Model 55 trimmer with red, green and yellow insulated leads, 25 turn adjustment, stops/clutch at end of travel, Type A shaft and a resistance of 20K. **PANEL MOUNT:** May be ordered for lead wire versions by adding suffix letter P to part number (i.e. 55-1-8-203P).

SPECTROL ELECTRONICS GROUP

Spectrol Reliance Ltd.
Drakes Way
Swindon, Wiltshire, England
Swindon 21351 • TELEX: 44692

Spectrol Electronics Corporation
17070 E. Gale Ave., P.O. Box 1220
City of Industry, Calif. 91749, U.S.A.
(213) 964-6565 • TWX (910) 584-1314

SP Elettronica spa
Via Carlo Pisacane 7
20016 Pero (Milan) Italy
35 30 241 • TELEX: 330091

See Page 11, headed "Warranty," the contents of which are made a part hereof and included herein by reference.

MODEL 62

- **MINIATURE .250 INCH SIZE IN TOP AND SIDE ADJUST**
- **RELIABLE PERFORMANCE AT LOW COMMERCIAL COST**
- **DESIGNED FOR HIGH-DENSITY PACKAGING**
- **SEALED FOR CLEANING IN COMMON SOLVENTS**

The Model 62 is a high performance single turn cermet trimming potentiometer, ideally suited for applications requiring subminiature size coupled with low cost and dependable service.

Only .250 inches in diameter, the unit is completely encased in a non-metallic housing preventing dielectric voltage breakdown or shorting even when tightly packaged against one another.

30% shorter than leading competitive styles, the Model 62 side adjust allows closer board stacking and requires only .045 square inches of mounting area.

Both top and side adjust versions feature designed-in quality and rugged construction, and are sealed for cleaning in common solvents. Standoffs and tinned pins are provided to facilitate soldering and board cleaning.

62-1-X 62-3-X

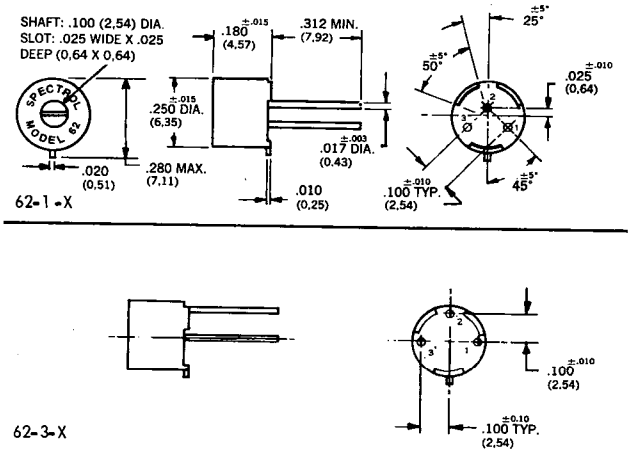

62-2-X

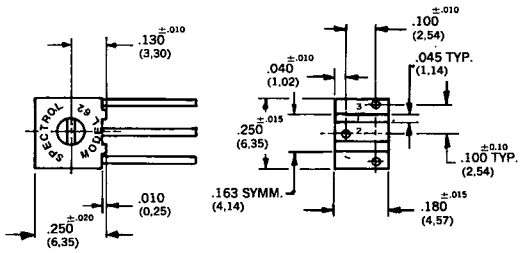

TOLERANCES: UNLESS OTHERWISE NOTED.
DECIMALS ± .005 ANGLES ±2°
BASIC DIMENSIONS ARE IN INCHES
MILLIMETER DIMENSIONS IN PARENTHESES

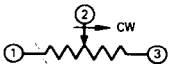

SCHEMATIC

SPECIFICATIONS (per MIL-R-22097 where paragraph is noted)

ELECTRICAL

ACTUAL EFFECTIVE ELECTRICAL TRAVEL	215° minimum
RESISTANCE RANGE	10 Ω to 1 megohm
RESISTANCE TOLERANCE	±20%
END RESISTANCE	1% RT or 2 Ω, whichever is greater
POWER RATING	0.75 watt at 25°C derated linearly to zero watts at 125°C, maximum voltage not to exceed 400 volts
DIELECTRIC WITHSTANDING VOLTAGE	1000 VAC at sea level, 350 VAC at 80000 feet, (24400 Meters)
INSULATION RESISTANCE	1000 megohms
TEMPERATURE COEFFICIENT OF RESISTANCE	±100 PPM/°C Maximum (100Ω-1megΩ)
CONTACT RESISTANCE VARIATION	10% or 100 ohms, whichever is greater

MECHANICAL

MECHANICAL ADJUSTMENT	270° nominal, stop to stop
SHAFT TORQUE	5.0 ounce-inch (360 gm-cm.) maximum
ROTATIONAL LIFE	200 cycles minimum, total resistance change 5% (para. 3.23)
WEIGHT	0.04 ounce (1.0 gram) maximum
STOP STRENGTH	6 ounce-inch (430 gm-cm.) minimum
RESISTANCE ELEMENT	Cermet

ENVIRONMENTAL

SALT SPRAY	96 hours(per para 3.18)
FUNGUS RESISTANCE	Non-nutrient(per para. 3.3.1)
TERMINAL STRENGTH	2 pounds (900 grams) minimum (per para. 3.24)
HUMIDITY	Steady state humidity, Mil-Std-202, Method 103
SEALED	Sealed to permit cleaning in common solvents.

		Maximum Change Total Resis.	Setting
THERMAL SHOCK	−55° C to +125° C (para. 3.13)	4%	2%
SHOCK	100 G's 11MS (para. 3.16)	2%	2%
VIBRATION	30 G's 10 to 2000 Hz (para. 3.17)	2%	2%
LOAD LIFE	1000 hours (para. 3.20)	5%	2%
LOW TEMPERATURE OPERATION	−55° C (para. 3.21)	2%	2%
HIGH TEMPERATURE EXPOSURE	+125° C (para. 3.22)	4%	2%

MARKING

Manufacturers name and part number, EIA resistance code and data code.

RESISTANCE VALUES, OHMS

10	100	1,000	10,000	100,000	500,000
20	200	2,000	20,000	200,000	1 MEG
50	500	5,000	50,000	250,000	

HOW TO ORDER THE MODEL 62

The Model 62 can be ordered from this specification sheet by stating the part number as follows:

MODEL NUMBER 62 - X - X - XXX

TERMINAL DESIGNATOR

1. **TOP ADJUST-ROUND**
   Printed circuit board pins mounting unit on bottom side which is .250 dia. (6,35) Adjustment shaft axis perpendicular to plane of circuit board.
2. **SIDE ADJUST-CUBE**
   Printed circuit board pins mounting unit on side which is .180 x .250. (4,57 x 6,35) Adjustment shaft axis parallel to plane of circuit board
3. **TOP ADJUST-ROUND**
   Printed circuit board pins mounting unit on bottom side which is .250 dia. (6,35) Adjustment shaft axis perpendicular to plane of circuit board. Pin grid .100 x .100 (2,54 x 2,54) (90°) RJ50 pattern.

STANDARD AVAILABLE FEATURES

1. Standard, ±20% RT tol.
2. Standard, ±10% RT tol.

RESISTANCE CODE

100
- 0 — Number of zeros following
- 0 — Second significant figure
- 1 — First significant figure

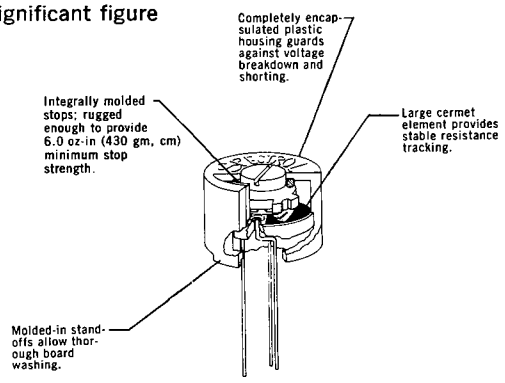

All characteristics will be standard as described on this data sheet. If special characteristics are required, please contact the factory or your local Spectrol representative.

SPECTROL ELECTRONICS GROUP

Spectrol

Spectrol Reliance Ltd.
Drakes Way
Swindon, Wiltshire, England
Swindon 21351 • TELEX: 44692

Spectrol Electronics Corporation
17070 E. Gale Ave., P.O. Box 1220
City of Industry, Calif. 91749, U.S.A.
(213) 964-6565 • TWX (910) 584-1314

SP Elettronica spa
Via Carlo Pisacane 7
20016 Pero (Milan) Italy
35 30 241 • TELEX: 330091

MODEL 63

■ LOW COST ■ BRUSH CONTACT ■ POSITIVE SOLDERED TERMINATIONS ■ SUPERIOR SETABILITY AND STABILITY
■ TEMPCO OF ±100 PPM/°C ■ CRV OF 3% OR 3Ω ■ SEALED FOR CLEANING IN COMMON SOLVENTS

ACTUAL SIZE

63 P
(63 M)

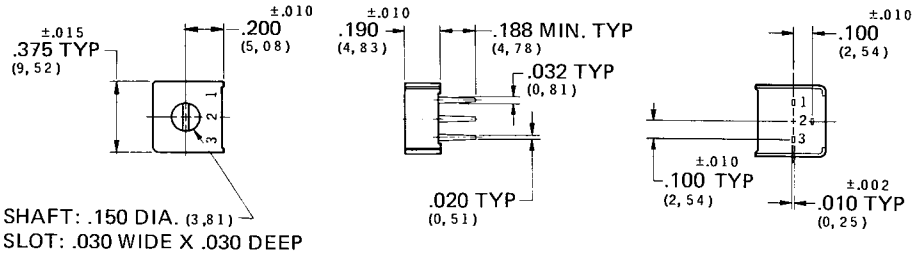

63 P

63 X

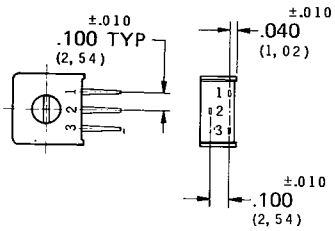

63 X

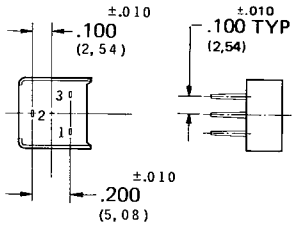

63 M

63 T
(63 H)

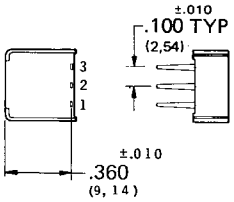

63 T

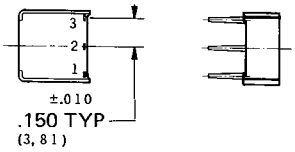

63 H

63 S
(63 V)

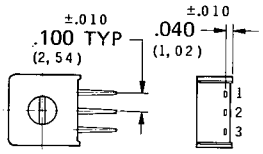

63 S

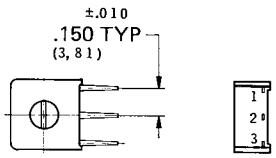

63 V

63 T607

63 T640

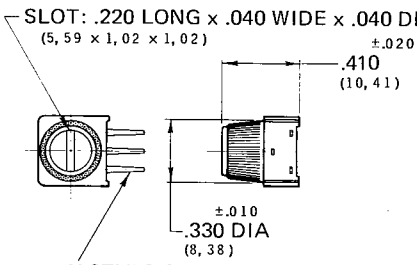

X STYLE SHOWN Any Style Available

63 T607

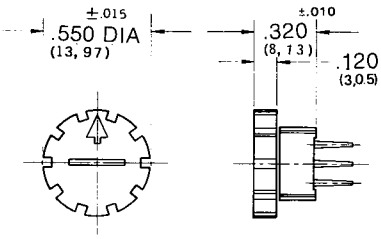

P STYLE SHOWN P, M,T,H Styles Available

63 T640

TOLERANCES: UNLESS OTHERWISE NOTED.
DECIMALS ±.005 ANGLES ±2°
BASIC DIMENSIONS ARE IN INCHES
MILLIMETER DIMENSIONS IN PARENTHESES

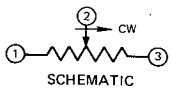

SPECIFICATIONS (per MIL-R-22097 where para. is noted)

ELECTRICAL

EFFECTIVE TRAVEL	270° nominal
RESISTANCE RANGE	10 Ω thru 2 meg ohms
RESISTANCE TOLERANCE	20% (±10% available)
END RESISTANCE	2 Ω or 1%, whichever is greater (para. 3.7.2)
TEMPERATURE COEFFICIENT OF RESISTANCE	±100 ppm/°C, 100 Ω thru 2 meg ohms 0 to +250 ppm/° C, below 100 Ω
POWER RATING	0.5 watts at 70° C derated linearly to zero watts at 125° C. maximum voltage not to exceed 400V
DIELECTRIC WITHSTANDING VOLTAGE	1000 vac at sea level, 250 vac at 80 000 feet (24 400 meters) (para. 3.10)
INSULATION RESISTANCE	1000 megohms minimum (para. 3.11)
CONTACT RESISTANCE VARIATION	3% or 3 Ω, whichever is greater (para. 3.9)

MECHANICAL

STOP	Solid
OPERATING TORQUE	5.0 oz-in (360 gm-cm) maximum
ROTATIONAL LIFE	200 cycles minimum, 2% maximum resistance change (para. 3.23)
WEIGHT	0.03 oz (0.85 grams) maximum
RESISTANCE ELEMENT	Cermet
SETABILITY	0.05% Rr
MECHANICAL ADJUSTMENT	300° nominal

ENVIRONMENTAL

SOLDERABILITY	95% minimum surface coverage (para. 3.25)
TERMINAL STRENGTH	2 Lbs. (900 grams) minimum (para. 3.24)
SEALING	Sealed to permit cleaning in common industrial solvents
OPERATING TEMPERATURE RANGE	−55° C to +125° C
THERMAL SHOCK	−55° C to +125° C (para. 3.13)

		Maximum Change Total Resis.	Maximum Change Setting
SHOCK	100 G's 11MS (para. 3.16)	1%	1%
VIBRATION	30 G's 10 to 2000 Hz (para. 3.17)	1%	1%
LOAD LIFE	1000 hours (para. 3.20)	3%	1%
LOW TEMPERATURE OPERATION	−55° C (para. 3.21)	2%	2%
HIGH TEMPERATURE EXPOSURE	+125° C (para. 3.22)	3%	2%
RESISTANCE TO SOLDER HEAT	350° C for 3 seconds (para. 3.19)	1%	—

MARKING

UNIT IDENTIFICATION	Manufacturers name and part number including EIA resistance code, date code and terminal identification

RESISTANCE VALUES, OHMS

10	200	5,000	50,000	500,000
20	500	10,000	100,000	1 MEG
50	1,000	20,000	200,000	2 MEG
100	2,000	25,000	250,000	

HOW TO ORDER THE MODEL 63

The standard model designation consists of three groups of characters. The first group is the Spectrol basic model number. The second group designates the terminal style. The third group is the standard 3 digit EIA resistance code. A fourth group is used only to identify spec standard or spec models; no designation for standard models is needed.

MODEL NUMBER

63

TERMINAL STYLE

P

- P PCB Pins: .100 grid (2,54) (TO-5 grid) w/adjustment perpendicular to board
- T PCB Pins: .100 (2,54) inline at edge w/adjustment perpendicular to board
- X PCB Pins: .100 grid (2,54) (TO-5 grid) w/adjustment parallel to board
- S PCB Pins: .100 (2,54) inline w/adjustment parallel to board
- M PCB Pins: .200 (5,08) X .200 (5,08) grid w/adjustment perpendicular to board
- V PCB Pins: .150 (3,81) inline w/adjustment parallel to board
- H PCB Pins: .150 (3,81) inline at edge w/adjustment perpendicular to board

EIA RESISTANCE CODE

103

- Number of zeros following
- second significant figure
- First significant figure

SPECIFICATION TYPE

T000

- T000 Standard per data sheet
- T010 ±10% RT tolerance
- T607 Knob Adjust (Any Pin Style)
- T640 Knob Adjust (Any Pin Style)

From the above example, part number 63P103 refers to a standard model 63, with P terminal style, printed circuit pins, adjustment perpendicular to board and a resistance of 10K ohms. Any unit having features other than those specifically indicated above would be a spec model and requires a factory quote.

SPECTROL ELECTRONICS GROUP

Spectrol Reliance Ltd.
Drakes Way
Swindon, Wiltshire, England
Swindon 21351 • TELEX: 44692

Spectrol Electronics Corporation
17070 E. Gale Ave., P.O. Box 1220
City of Industry, Calif. 91749, U.S.A.
(213) 964-6565 • TWX (910) 584-1314

SP Elettronica spa
Via Carlo Pisacane 7
20016 Pero (Milan) Italy
35 30 241 • TELEX: 330091

See Page 11, headed "Warranty," the contents of which are made a part hereof and included herein by reference.

MODEL 64

▪ LOW COST ▪ BRUSH CONTACT ▪ POSITIVE GEAR DRIVE ▪ SOLDERED TERMINATIONS
▪ SUPERIOR SETABILITY AND STABILITY ▪ TEMPCO OF ±100 PPM/°C ▪ CRV OF 3% OR 3Ω
▪ SEALED FOR CLEANING IN COMMON SOLVENTS

ACTUAL SIZE

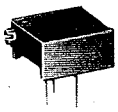

64 P

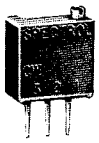

64 W

64 X

64 M

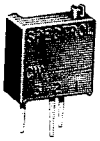

64 Y

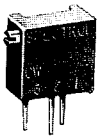

64 Z

64 R
64 P

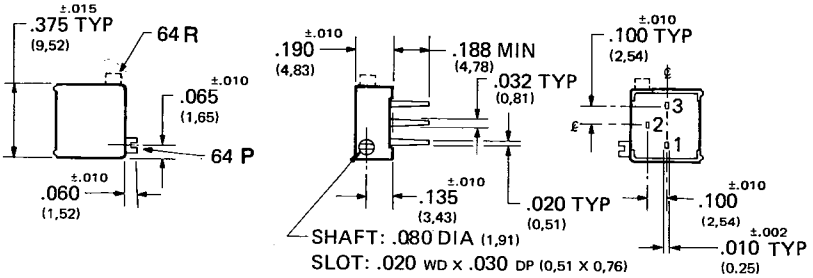

64 W
64 X

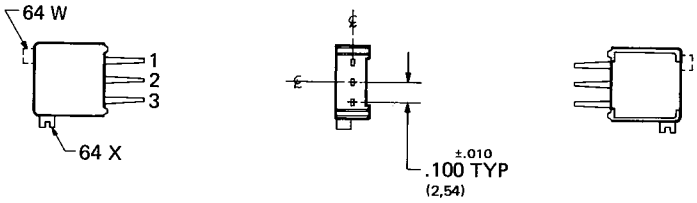

64 N
64 M

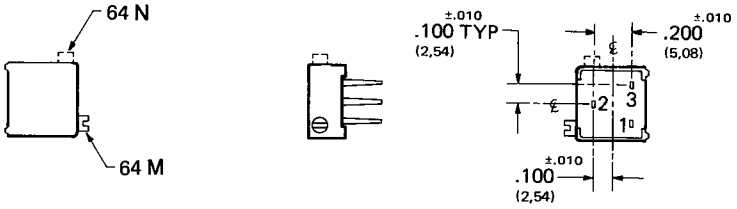

64 Y
64 Z

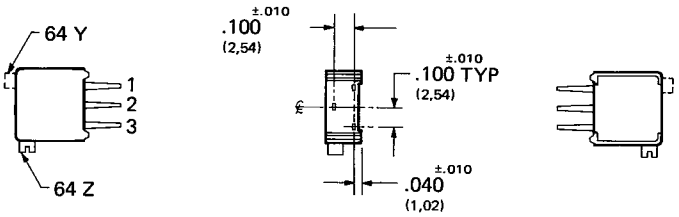

TOLERANCES: UNLESS OTHERWISE NOTED.
DECIMALS ± .005 ANGLES ±2°
BASIC DIMENSIONS ARE IN INCHES
MILLIMETER DIMENSIONS IN PARENTHESES

SCHEMATIC

SPECIFICATIONS (per MIL-R-22097 where para. is noted)

ELECTRICAL

EFFECTIVE TRAVEL	25 turns nominal
RESISTANCE RANGE	10Ω thru 2 meg ohms
RESISTANCE TOLERANCE	10%
END RESISTANCE	2Ω or 1%, whichever is greater (Para. 3.7.2)
TEMPERATURE COEFFICIENT OF RESISTANCE	100 ppm/°C, 100Ω thru 2 meg ohms 0 to +250 ppm/°C, below 100Ω
POWER RATING	0.5 watts at 85°C, derated linearly to zero watts at 125°C. maximum voltage not to exceed 400 V
DIELECTRIC WITHSTANDING VOLTAGE	1000 vac at sea level, 250 vac at 80,000 feet (24400 meters) (Para. 3.10)
INSULATION RESISTANCE	1000 megohms minimum (Para. 3.11)
CONTACT RESISTANCE VARIATION	3% or 3Ω, whichever is greater (Para. 3.9)

MECHANICAL

STOP	Contact idles at stops
OPERATING TORQUE	5.0 oz-in (35.3n-mm) maximum
WEIGHT	0.04 oz (1.13 grams) maximum
RESISTANCE ELEMENT	Cermet
SETABILITY	0.05% RT

ENVIRONMENTAL

SOLDERABILITY	95% minimum surface coverage ((Para. 3.25)
TERMINAL STRENGTH	2 lbs. (900 grams) minimum (Para. 3.24)
SEALING	Sealed to permit cleaning in common industrial solvents
OPERATING TEMPERATURE RANGE	−55°C to 125°C

		Maximum Change	
		Total Resis.	Setting
THERMAL SHOCK	−55°C to 125°C (Para. 3.13)	2%	1%
MOISTURE RESISTANCE	Mil-std 202, Method 103	2%	—
SHOCK	100 G's 6 MS (Para. 3.16)	1%	1%
VIBRATION	30 G's, 10 to 2000 Hz ((3.17)	1%	1%
RESISTANCE TO SOLDER HEAT	350° C for 3 seconds (Para. 3.19)	1%	—
LOAD LIFE	1000 hours (Para. 3.20)	3%	1%
LOW TEMPERATURE OPERATION	−55°C (Para. 3.21)	2%	2%
HIGH TEMPERATURE EXPOSURE	+125°C (Para. 3.22)	3%	2%
ROTATIONAL LIFE	200 Cycles minimum (Para. 3.23)	2%	—

MARKING

UNIT IDENTIFICATION	Manufacturers name and part number including EIA resistance code, date code and terminal identification.

RESISTANCE VALUES, OHMS

10	200	5,000	50,000	500,000
20	500	10,000	100,000	1 MEG
50	1,000	20,000	200,000	2 MEG
100	2,000	25,000	250,000	

HOW TO ORDER THE MODEL 64

The standard model designation consists of three groups of characters. The first group is the Spectrol basic model number. The second group designates the terminal style. The third group is the standard 3 digit EIA resistance code. A fourth group is used only to identify spec standard or spec models; no designation for standard models is needed.

MODEL NUMBER
64

TERMINAL STYLE
P

- P Printed Circuit Pins: 0.100 (2,54) (TO-5 grid) w/adjustment parallel to board
- R Same as 64P except optional shaft position
- W Printed Circuit Pins: 0.100 (2,54) inline on side center line w/adjustment perpendicular to board
- X Printed Circuit Pins: 0.100 (2,54) inline on side center line w/adjustment parallel to board
- M Printed Circuit Pins: 0.200 (5,08) grid with adjustment parallel to board
- N Same as 64M except optional shaft position
- Y Printed Circuit Pins: 0.100 (2,54) (TO-5 grid) on side w/adjustment perpendicular to board
- Z Printed Circuit Pins: 0.100 (2,54) (TO-5 grid) on side w/adjustment parallel to board

EIA RESISTANCE CODE
103

- 3 — Number of zeros following
- 0 — second significant figure
- 1 — First significant figure

SPECIFICATION TYPE
T000

- T000 Standard per data sheet

From the above example, part number 64P103 refers to a standard model 64, with P terminal style, printed circuit pins, adjustment parallel to board and a resistance of 10K ohms. Any unit having features other than those specifically indicated above would be a spec model and requires a factory quote.

SPECTROL ELECTRONICS GROUP

Spectrol Reliance Ltd.
Drakes Way
Swindon, Wiltshire, England
Swindon 21351 • TELEX: 44692

Spectrol Electronics Corporation
17070 E. Gale Ave., P.O. Box 1220
City of Industry, Calif. 91749, U.S.A.
(213) 964-6565 • TWX (910) 584-1314

SP Elettronica spa
Via Carlo Pisacane 7
20016 Pero (Milan) Italy
35 30 241 • TELEX: 330091

See Page 11, headed "Warranty," the contents of which are made a part hereof and included herein by reference.

MODEL 65

■ LOW COST ■ BRUSH CONTACT ■ SUPERIOR SETABILITY AND STABILITY ■ LOW PROFILE

■ DESIGNED FOR HIGH DENSITY PACKAGING ■ SEALED FOR CLEANING IN COMMON SOLVENTS

ACTUAL SIZE

65Y

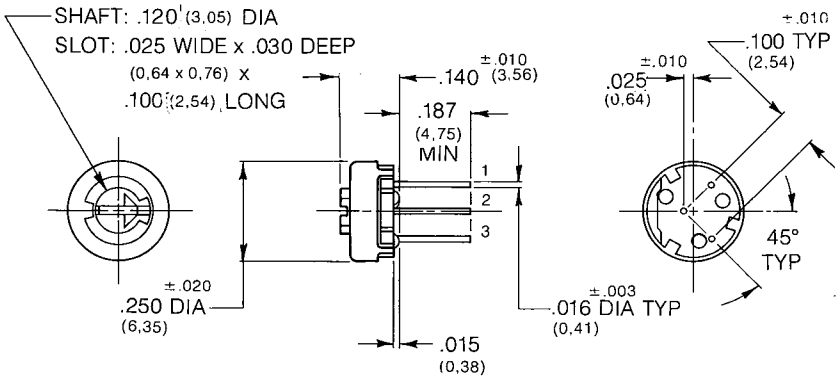

65P

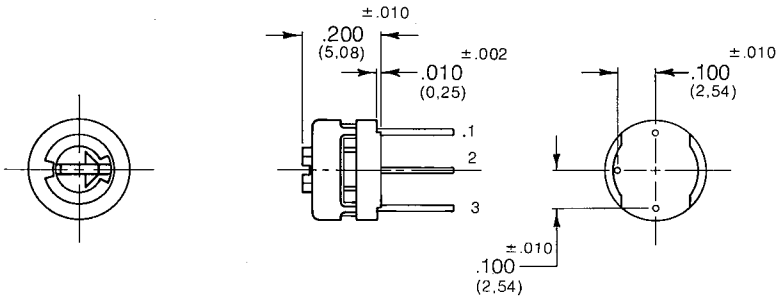

65X

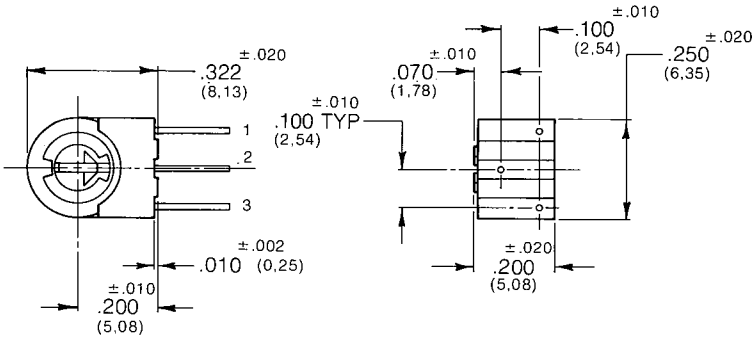

TOLERANCES: UNLESS OTHERWISE NOTED.
DECIMALS ± .005 ANGLES ±2°
BASIC DIMENSIONS ARE IN INCHES
MILLIMETER DIMENSIONS IN PARENTHESES

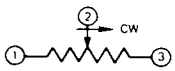

SCHEMATIC

SPECIFICATIONS

ELECTRICAL

EFFECTIVE TRAVEL	240° nominal
RESISTANCE RANGE	10 Ω thru 2 megohms
RESISTANCE TOLERANCE	20% (±10% available)
END RESISTANCE	2 Ω maximum
TEMPERATURE COEFFICIENT OF RESISTANCE	±100 ppm/°C, 100Ω thru 2 megohms 0 to + 200 ppm/°C, below 100 Ω
POWER RATING	0.5 watts at 70°C derated linearly to zero watts at 125°C, maximum voltage not to exceed 400V
DIELECTRIC WITHSTANDING VOLTAGE	600 vac at sea level, 200 vac at 80,000 feet (24 400 meters)
INSULATION RESISTANCE	1000 megohms minimum
CONTACT RESISTANCE VARIATION	3% or 3 Ω, whichever is greater

MECHANICAL

STOP	Solid
OPERATING TORQUE	5.0 oz-in (35,3 mN:m) maximum
ROTATIONAL LIFE	200 cycles minimum
WEIGHT	0.01 oz (0,28 grams) maximum
RESISTANCE ELEMENT	Cermet
SETABILITY	0.05% Rt
MECHANICAL ADJUSTMENT	270° nominal

MECHANICAL (Cont.)

TERMINAL STRENGTH	2 lbs. (900 grams) minimum
SEALING	Sealed to permit cleaning in common solvents

ENVIRONMENTAL

OPERATING TEMPERATURE RANGE	—55°C to +125°C
THERMAL SHOCK	—55°C to +125°C, 5 Cycles
SHOCK	100 G's, 11MS
VIBRATION	30 G's, 10 to 2000 Hz
LOAD LIFE	1000 hours
LOW TEMPERATURE OPERATION	—55°C
HIGH TEMPERATURE EXPOSURE	+125°C, 250 Hours
RESISTANCE TO SOLDER HEAT	350°C for 3 seconds
HUMIDITY	Steady state

MARKING

UNIT IDENTIFICATION	Manufacturer's name and model number including EIA resistance code, date code and terminal identification.

RESISTANCE VALUES, OHMS

10	200	5,000	50,000	500,000
20	500	10,000	100,000	1 MEG
50	1,000	20,000	200,000	2 MEG
100	2,000	25,000	250,000	

HOW TO ORDER THE MODEL 65

The standard model designation consists of three groups of characters. The first group is the Spectrol basic model number. The second group designates the terminal style. The third group is the standard 3-digit EIA resistance code. A fourth group is used only to identify non-standard models; no designation for standard models is needed.

MODEL NUMBER
65

TERMINAL STYLE
Y

- Y — PCB pins adjustment perpendicular to board
- P — PCB pins adjustment perpendicular to board
- X — PCB pins adjustment parallel to board

EIA RESISTANCE CODE
103

- First two significant figures
- Number of zeros following

SPECIFICATION TYPE
TXXX

- T010 ±10% Rt tolerance

From the above example, part number 65Y103 refers to a standard model 65, with Y terminal style, printed circuit pins, adjustment perpendicular to board and a resistance of 10K ohms. Any unit having features other than those specifically indicated above would be a special model and requires a factory quote.

SPECTROL ELECTRONICS GROUP

Spectrol Reliance Ltd.
Drakes Way
Swindon, Wiltshire, England
Swindon 21351 • TELEX: 44692

Spectrol Electronics Corporation
17070 E. Gale Ave., P.O. Box 1220
City of Industry, Calif. 91749, U.S.A.
(213) 964-6565 • TWX (910) 584-1314

SP Elettronica spa
Via Carlo Pisacane 7
20016 Pero (Milan) Italy
35 30 241 • TELEX: 330091

See Page 11, headed "Warranty," the contents of which are made a part hereof and included herein by reference.

MODEL 70

■ IMPROVED WIPER ■ UNIQUE "T" SLIDER BLOCK DESIGN ASSURE EXCELLENT SETABILITY AND STABILITY ■ CRV OF 3% OR 3Ω ■ TEMPCO OF 100 PPM/°C ■ RT TOLERANCE ±10% STD (±5% AVAILABLE)

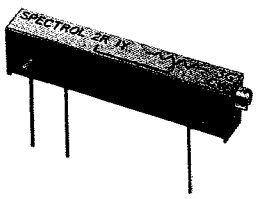

70PXXX

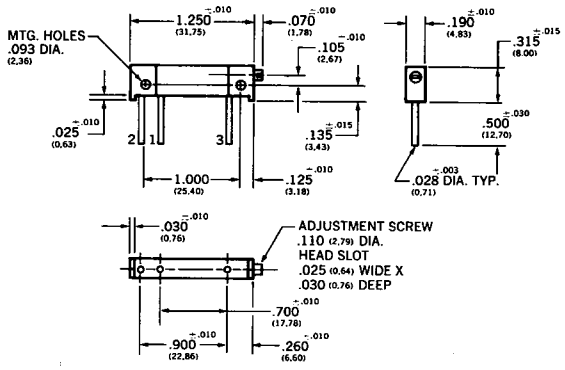

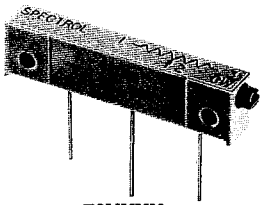

70YXXX

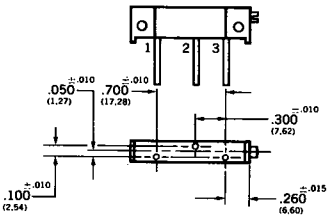

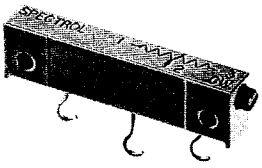

70YXXX T602

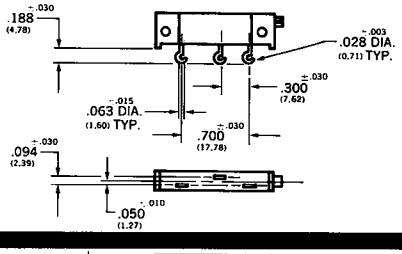

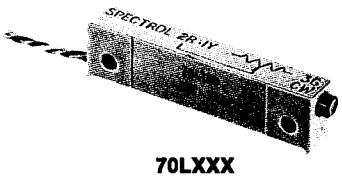

70LXXX

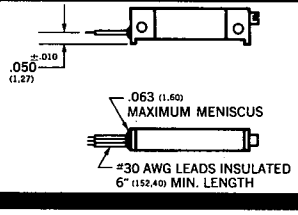

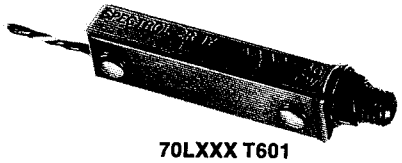

70LXXX T601
70YXXX T603

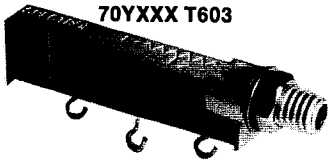

70LXXX T634
70YXXX T638

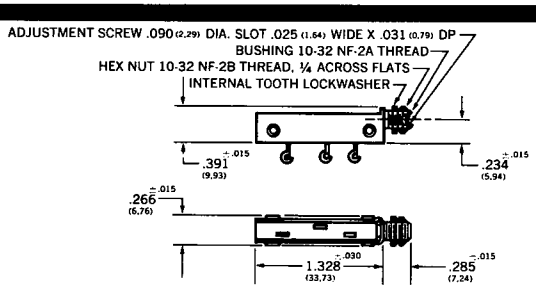

TOLERANCES: UNLESS OTHERWISE NOTED.
DECIMALS ± .005 ANGLES ±2°
BASIC DIMENSIONS ARE IN INCHES
MILLIMETER DIMENSIONS IN PARENTHESES

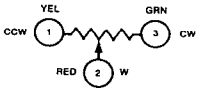

CIRCUIT DIAGRAM

SPECIFICATIONS (per MIL-R-22097 where para. is noted)

ELECTRICAL

RESISTANCE RANGE ..... 10 Ω thru 2 megohm

STANDARD RESISTANCE TOLERANCE ..... 10% (para. 3.7.1)

END RESISTANCE ..... 2 Ω maximum (para. 3.7.2)

ACTUAL EFFECTIVE ELECTRICAL TRAVEL ..... 20 turns nominal (para. 3.8)

CONTACT RESISTANCE VARIATION ... 3% or 3 Ω, whichever is greater (para. 3.9)

DIELECTRIC WITHSTANDING VOLTAGE ..... 1000 V AC at sea level, 350 V AC at 80,000 feet (para. 3.10) (24,400 meters)

INSULATION RESISTANCE ..... 1000 megohms (para. 3.11)

POWER RATING ..... 1.0 watt at 85°C derated linearly to zero watts at 150°C (para. 3.5) max. voltage not to exceed 400 volts

TEMPERATURE COEFFICIENT OF RESISTANCE ..... See table below; ±100 PPM/°C

MECHANICAL

STOPS ..... Wiper idles against stops (para. 3.4.7.1)

OPERATING TORQUE ..... 5 oz.-in. (360 gm-cm) maximum (para. 3.12.1)

ROTATIONAL LIFE ..... 200 cycles min. with loaded circuit, max. change in resistance 2% (para. 3.23) or 500 cycles min. without discontinuity unloaded

WEIGHT ..... 0.116 oz (3.3 grams) max.

ENVIRONMENTAL

OPERATING TEMPERATURE RANGE .. −55°C to +150°C

SALT SPRAY ..... 96 hours (para. 3.18)

TERMINAL STRENGTH ..... 2 lbs. (900 gms) min. push/pull (para. 3.24)

SEALED ..... All units sealed to permit cleaning in common solvents

		Maximum Change Total Resis.	Setting
THERMAL SHOCK	−55° C to +125° C (para. 3.13)	2%	1%
SHOCK	100 G's 11MS (para. 3.16)	1%	1%
VIBRATION	30 G's 10 to 2000 Hz (para. 3.17)	1%	1%
LOAD LIFE	1000 hours (para. 3.20)	3%	1%
LOW TEMPERATURE OPERATION	−55° C (para. 3.21)	2%	2%
HIGH TEMPERATURE EXPOSURE	+125° C (para. 3.22)	3%	2%
RESISTANCE TO SOLDER HEAT	350° C for 3 seconds (para. 3.19)	1%	—

MARKING

UNIT IDENTIFICATION ..... Manufacturer's name and part number including EIA resistance code, date code, circuit diagram and military style designation as applicable

RESISTANCE AND TEMPCO VALUES

RESISTANCE (Ω NOMINAL)	TEMPCO (PPM/°C)	RESISTANCE (Ω NOMINAL)	TEMPCO (PPM/°C)
10	−100 to +200	10,000	±100
20	−100 to +200	20,000	±100
50	−100 to +200	25,000	±100
100	±100	50,000	±100
200	±100	100,000	±100
500	±100	200,000	±100
1,000	±100	250,000	±100
2,000	±100	500,000	±100
5,000	±100	1 Meg	±100
		2 Meg	±100

ORDERING CODE (TERMINAL AND OPTIONAL FEATURES)

The standard model number consists of three groups of digits. The first group is the Spectrol model number. The second group of one digit describes the type of electrical terminals. The third group is the standard EIA three digit resistance code. A fourth group is used if required to identify units that incorporate spec standard features.

MODEL NUMBER

70

TERMINAL STYLE

L

L L Leadwire

P Printed circuit pins

Y Printed circuit pins

EIA RESISTANCE CODE

103

- 3 — Number of zeros following second significant figure
- 0 — second significant figure
- 1 — First significant figure

SPECIFICATION TYPE

T000

- T000 Standard per data sheet
- T050 O-ring seal
- T601 Panel mount added to terminal style L
- T602 Solder hook pins (style Y)
- T603 Panel mount added to solder hooks (style Y)
- T634 Panel mount (10-32 thd.) cemented in place (style L)
- T638 Panel mount (10-32 thd.) cemented in place added to solder hooks (style Y)

From the above example, sample part number 70L103 T000 refers to a standard Model 70 with wire leads and a resistance of 10K. Part number 70Y203T603 would refer to a Model 70 with solder hook pins with a resistance of 20K having a panel mount. Any unit having any features other than those specifically indicated under the example would be a spec model and require a factory quote.

SPECTROL ELECTRONICS GROUP

Spectrol

Spectrol Reliance Ltd.
Drakes Way
Swindon, Wiltshire, England
Swindon 21351 • TELEX: 44692

Spectrol Electronics Corporation
17070 E. Gale Ave., P.O. Box 1220
City of Industry, Calif. 91749, U.S.A.
(213) 964-6565 • TWX (910) 584-1314

SP Elettronica spa
Via Carlo Pisacane 7
20016 Pero (Milan) Italy
35 30 241 • TELEX: 330091

MODEL 84

ACTUAL SIZE

84-3-8
Screwdriver Adjust

84-3-10
Knob Adjust

84-5-6
Panel Mount

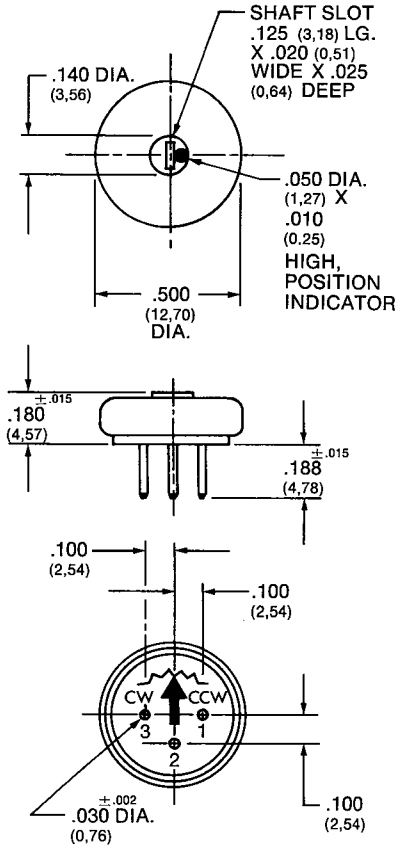

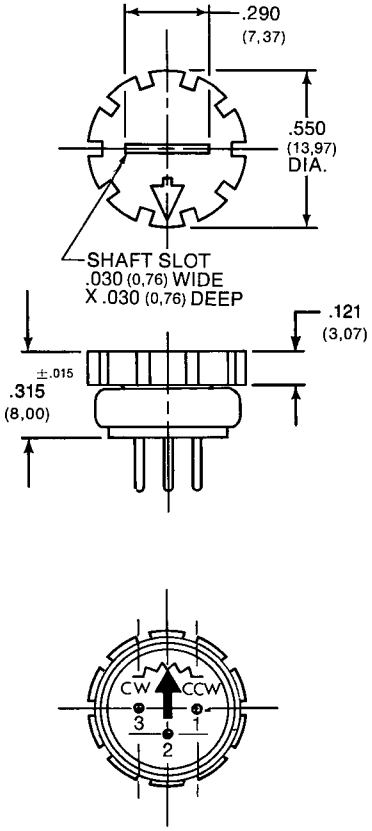

See 84-3-8 for redundant dimensions.

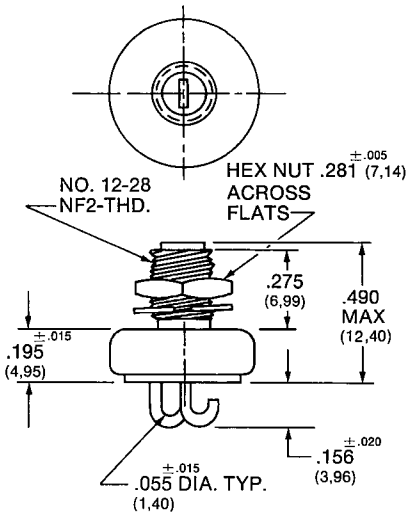

See 84-3-8 for redundant dimensions.

TOLERANCES: UNLESS SPECIFIED:
DECIMALS ±.005 ANGLES ±2°
BASIC DIMENSIONS ARE IN INCHES
MILLIMETER DIMENSIONS ARE IN PARENTHESES

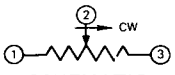

SCHEMATIC

SPECIFICATIONS: (Per MIL-R-27208 where paragraph is noted)

ELECTRICAL

ACTUAL EFFECTIVE ELECTRICAL TRAVEL	300° nominal
RESISTANCE TOLERANCES	±5% (para. 3.7.1)
ABSOLUTE MINIMUM RESISTANCE	0.25% R_T or 1.0Ω, whichever is greater (para. 3.7.2)
END RESISTANCE	2% R_T 1.0Ω, whichever is greater (para. 3.7.3)
TEMPERATURE COEFFICIENT OF RESISTANCE	50 PPM/°C max. (para. 3.15)
POWER RATING	1.5 watts at 70°C derated linearly to zero watts at 175°C
DIELECTRIC WITHSTANDING VOLTAGE	1000 vac at sea level, 350 vac at 80,000 feet (24400 meters) para. 3.11.
INSULATION RESISTANCE	1000 megohms (para. 3.12)
PEAK NOISE	100Ω ENR during adjustment (para. 3.10)

MECHANICAL

MECHANICAL ADJUSTMENT	320° minimum, stop to stop
OPERATING TORQUE	5.0 oz-in (360 gm-cm) max. (para. 3.13)
ROTATIONAL LIFE	500 cycles minimum without discontinuity
WEIGHT	0.06 oz. (1.7 grams) max.
STATIC STOP STRENGTH	15 oz-in (1080 gm-cm) max.

ENVIRONMENTAL

MOISTURE RESISTANCE	Resistance change ± (1% +0.05Ω) and insulation resistance not less than 10 megohms (para. 3.16)
VIBRATION	30 G's to 2000 Hz (para. 3.18)
SHOCK	100 G's 6 ms. (para. 3.17)
SALT SPRAY	96 hours (para. 3.19)
FUNGUS RESISTANCE	Non-nutrient (para. 3.3.1)
LOW TEMPERATURE OPERATION	−65°C (para. 3.22)
HIGH TEMPERATURE EXPOSURE	+175°C (para. 3.23)
LOAD LIFE	1000 hours (para. 3.21)
TERMINAL STRENGTH	2 lbs. (900 gms) min. (para. 3.25)
EFFECT OF SOLDERING	Maximum resistance change ±(1% +0.05Ω) (para. 3.20)
THERMAL SHOCK	−65°C to +125°C, max. resistance change ±(1% +0.05Ω) setting stability 1% plus resolution max. (para. 3.14)
SEALED	1 minute ±5 sec. in 85° $^{+5°}_{-0°}$C water (para. 3.27)

MARKING

Manufacturers name and part number including EIA resistance code, date code, and circuit diagram.

RESISTANCE AND NOMINAL RESOLUTION VALUES

RESISTANCE (Ω)	RESOLUTION (%)	RESISTANCE (Ω)	RESOLUTION (%)
10	1.06	2,000	.29
20	.82	5,000	.20
50	.62	10,000	.16
100	.46	20,000	.13
200	.39	50,000	.084
500	.38		
1,000	.33		

ORDERING CODE (TERMINAL AND OPTIONAL FEATURES)

The part number consists of four groups of digits. The first group is the SPECTROL model number. The second group of one digit describes the type of electrical terminals. The third group (one or two digits) describes the adjustment screw type and other features. The fourth group is the standard EIA three digit resistance code.
example:

84 – X – XX – XXX

MODEL NUMBER
84

TERMINAL DESIGNATOR
3
- 3. Printed circuit pins
- 5. Solder hooks

STANDARD AVAILABLE FEATURES
8
- 6. 12-28 threaded bushing mount
- 8. Screwdriver adjust
- 10. Knob adjust

EIA RESISTANCE CODE
203
- Number of zeros following
- Second significant figure
- First significant figure

It can be seen from the example that the sample part number 84-3-8-203 refers to the standard Model 84 trimmer with printed circuit pins 180° from shaft, screwdriver adjust with stops and a resistance of 20K.

SPECTROL ELECTRONICS GROUP

Spectrol Reliance Ltd.
Drakes Way
Swindon, Wiltshire, England
Swindon 21351 • TELEX: 44692

Spectrol Electronics Corporation
17070 E. Gale Ave., P.O. Box 1220
City of Industry, Calif. 91749, U.S.A.
(213) 964-6565 • TWX (910) 584-1314

SP Elettronica spa
Via Carlo Pisacane 7
20016 Pero (Milan) Italy
35 30 241 • TELEX: 330091

See Page 11, headed "Warranty," the contents of which are made a part hereof and included herein by reference.

MODELS 132, 138, 139

- CHOICE OF THREE ELEMENTS FOR BROAD RESISTANCE RANGE
- CENTER TAP AVAILABLE
- CONTINUOUS ROTATION & MECHANICAL STOPS BOTH STANDARD
- HIGH POWER RATING (139)

ACTUAL SIZE

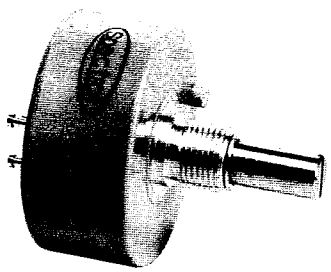

Models 132, 138, 139
Bushing Mount

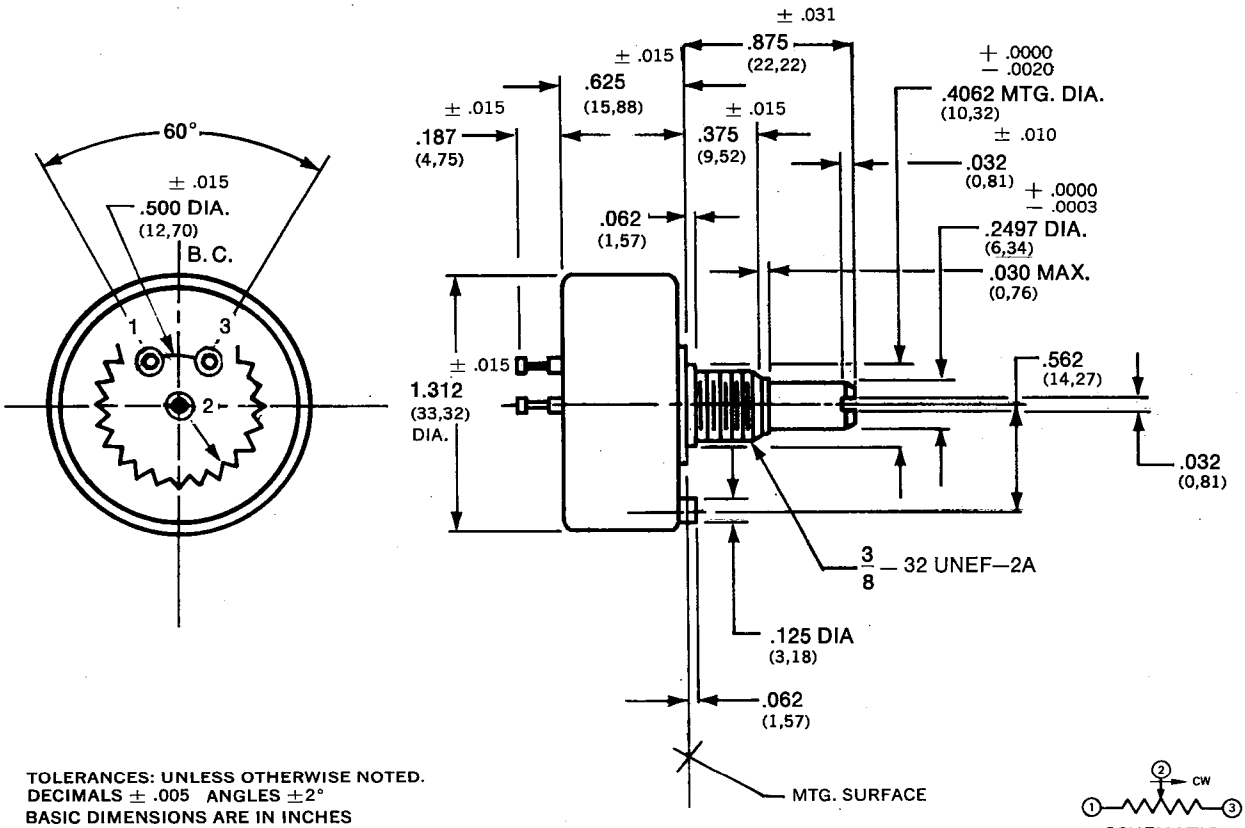

TOLERANCES: UNLESS OTHERWISE NOTED.
DECIMALS ± .005 ANGLES ±2°
BASIC DIMENSIONS ARE IN INCHES
MILLIMETER DIMENSIONS IN PARENTHESIS

SCHEMATIC

SPECIFICATIONS

(MIL-R-12934 and MIL-R-39023 Test Procedures Apply)

(Unless otherwise noted, specifications are applicable to all models)

ELECTRICAL

TOTAL RESISTANCE ..... Model 132 Wirewound
Standard Range: 5Ω to 20KΩ Special to 35KΩ

Tolerance:	Standard	Special
50Ω and above:	±3%	±1%
Below 50Ω	±5%	±3%

Model 138 Conductive Plastic
Standard Range: 1KΩ to 50KΩ
Tolerance Standard: ±20%
Special to ±5%

Model 139 Cermet
Standard Range: 500Ω to 2 megohms
Tolerance: Standard ±20%
Special to ±5%

LINEARITY (INDEPENDENT) .....

(132) Total Resistance	Standard	Best Practical
5Ω to 20Ω	±1.0%	±0.75%
20Ω to 200Ω	±1.0%	±0.50%
200Ω and above	±0.5%	±0.25%
(138 & 139)	±2.0%	±0.25%

NOISE ..... (132) 100 ohms ENR

OUTPUT SMOOTHNESS ..... (138 & 139) 0.1% maximum

POWER RATING @ 40°C AMBIENT ..

Model 132	Model 138	Model 139
2.75 watts	2 watts	5 watts

All Models derated to zero at 125°C

ROTATION	Model 132	Model 138	Model 139
(CONTINUOUS)	352°±2°	345°±4°	345°±4°
(STOPS)	336°±2°	336°±4°	336°±4°

INSULATION RESISTANCE ..... 1000 megohms min., 500 VDC

DIELECTRIC STRENGTH ..... 1000 volts RMS, 60 Hz

ABSOLUTE MINIMUM RESISTANCE .. 1.0% of total resistance or 0.5Ω whichever is greater (132 only)

MINIMUM VOLTAGE ..... 0.5% maximum

TEMPERATURE COEFFICIENT OF RESISTANCE ..... (132) refer to standard resistance element data
(138) ±500 PPM/°C maximum
(139) ±100 PPM/°C maximum

MECHANICAL

ROTATION ..... 360° continuous; 340° ±5° Stops

BEARING TYPE ..... Sleeve

TORQUE (MAXIMUMS) OZ-IN (gm-cm) ..... Starting: 1.0 (72 gm-cm)
Running: 0.7 (50,40 gm-cm)

RUNOUTS (MAXIMUMS) .....

Shaft	T.I.R. .002 (0,05)
Pilot dia.	T.I.R. .003 (0,08)
Lateral	T.I.R. .005 (0,13)
Shaft end play	.008 (0,20)
Shaft radial play	.003 (0,08)

WEIGHT ..... 1.0 oz. maximum (28,35 gm)

STOP STRENGTH ..... 8.0 in-lbs. (9,21 kgm-cm) (Stop Version Only)

MATERIALS

HOUSING ..... Molded glass filled thermoplastic

REAR LID ..... Glass filled thermoset plastic

SHAFT ..... Stainless steel, non magnetic, passivated

TERMINALS ..... Brass, plated for solderability

MOUNTING HARDWARE ..... Lockwasher: internal tooth, steel, nickel plated
Panel nut: brass, nickel plated

ENVIRONMENTAL

VIBRATION ..... 15 G thru 2000 Hz

SHOCK 50G

SALT SPRAY ..... 48 hours

ROTATIONAL LIFE ..... Shaft Revolutions:

Model 132	500,000
Model 138	2 million
Model 139	2 million

TEMPERATURE RANGE ..... −55°C to +125°C

MOISTURE RESISTANT

MARKING Units shall be marked with Spectrol name, model number, resistance and tolerance, linearity, terminal identification, and date code.

Applicable test procedures: Model 132, MIL-R-12934; Model 138 & 139. MIL-R-39023.

POWER RATING CHART

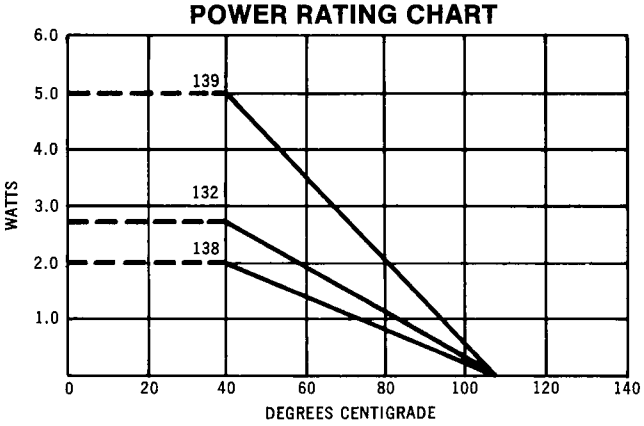

RESISTANCE ELEMENT DATA

FOR 132-0-X-XXX MODELS ONLY

RESISTANCE VALUES (ohms)	RESO-LUTION (%)	OHMS PER TURN	MAX CURRENT AT 40 C AMBIENT (milliamps)	MAX VOLTAGE ACROSS COIL (volts)	WIRE TEMP COEF. (PPM/°C)
5	.419	.021	742	3.71	800
10	.327	.032	524	5.24	800
20	.280	.056	371	7.42	800
50	.290	.145	234	11.7	20
100	.251	.251	166	16.6	20
200	.212	.424	122	24.4	20
500	.161	.806	74.2	37.1	20
1K	.150	1.50	52.4	52.4	20
2K	.132	2.64	37.1	74.2	20
5K	.107	5.34	23.4	117	20
10K	.080	7.98	16.6	166	20
20K	.067	13.4	12.2	244	20
35K	.057	20.0	8.88	311	20

HOW TO ORDER THE MODELS 132, 138, 139

The Models 132, 138 and 139 can be ordered from this specification sheet by stating:

Example: **139 – 0 – 0 – 203**

MODEL NUMBER
132, 138 or 139

MECHANICAL OPTIONS
0. Continuous
2. Stops

OTHER OPTIONAL FEATURES
0. Standard (End Taps)
1. Center Tap (Within 5° of Electrical Center)

RESISTANCE CODE
2 0 3
3 — Number of zero's
0 — 2nd significant digit
2 — 1st significant digit

Other characteristics will be standard as described on this specification sheet. If special characteristics are required such as: special linearity tolerance, special resistance tolerance, non-linear functions, etc., please state these on your order.

SPECTROL ELECTRONICS GROUP

Spectrol Reliance Ltd.
Drakes Way
Swindon, Wiltshire, England
Swindon 21351 • TELEX: 44692

Spectrol Electronics Corporation
17070 E. Gale Ave., P.O. Box 1220
City of Industry, Calif. 91749, U.S.A.
(213) 964-6565 • TWX (910) 584-1314

SP Elettronica spa
Via Carlo Pisacane 7
20016 Pero (Milan) Italy
35 30 241 • TELEX: 330091

See Page 11, headed "Warranty," the contents of which are made a part hereof and included herein by reference.

MODELS 140,142

ACTUAL SIZE

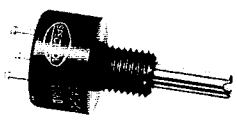

Model 140
Bushing Mount

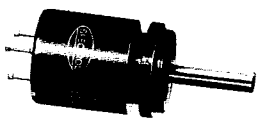

Model 142
Servo Mount

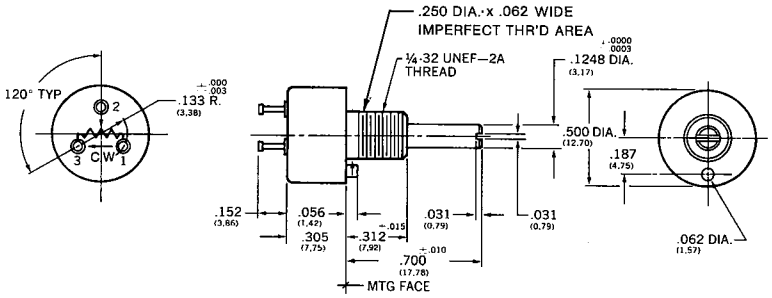

BUSHING MOUNT

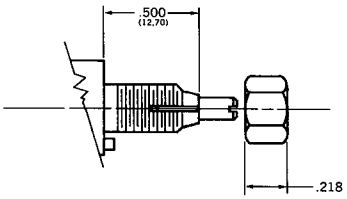

INTEGRAL SHAFT LOCK

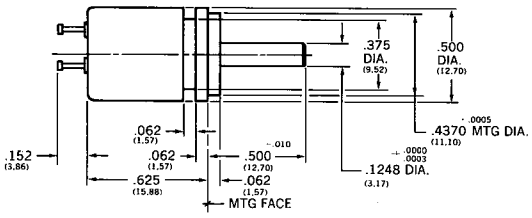

SERVO MOUNT

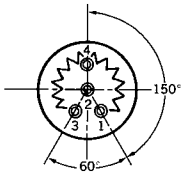

CENTER TAP AVAILABLE AS
SPEC STANDARD FEATURE

TOLERANCES: UNLESS OTHERWISE NOTED.
DECIMALS ± .005 ANGLES ±2°
BASIC DIMENSIONS ARE IN INCHES
MILLIMETER DIMENSIONS IN PARENTHESES

SPECIFICATIONS (MIL-R-12934 Test Procedures Apply)

ELECTRICAL

TOTAL RESISTANCE ..... Standard Range 50Ω to 50KΩ, Special to 70KΩ ±5% tolerance.

ABSOLUTE MINIMUM RESISTANCE ..... Linearity x Total Resistance or 0.5Ω, whichever is greater.

LINEARITY (INDEPENDENT) .±1.0%.

NOISE ..... 100 ohms ENR

POWER RATING ..... 2 watts at 40°C ambient derated linearly to zero at 125°C.

INSULATION RESISTANCE ... 1,000 megohms min., 500 volts DC.

DIELECTRIC STRENGTH ..... 1,000 volts RMS, 60 Hz.

	140	142
ROTATION	320° ± 5°	350° + 0° −4°

END VOLTAGE ..... Linearity x total applied voltage for total resistances above 20Ω; 2.0% of total applied voltage for 20Ω and below.

MECHANICAL

		140	142
ROTATION		330° ±5°	360° continuous
BEARING TYPE		Sleeve Bearing	Ball Bearing
TORQUE (MAXIMUMS) oz-in (gm-cm)	Starting	0.2 (14,40)	0.075 (5,40)
	Running	0.2 (14,40)	0.05 (3,60)
	Traversing Dead Zone	Not applicable	0.20 oz. in (14,40)
WEIGHT		0.1 oz. max. (2,84 gm)	0.3 oz (8.50 gm) max.

STOP STRENGTH ..... 5 in-lbs. (5.76 kgm-cm) static (140 only)

MECHANICAL (Con't.)

RUNOUTS (MAXIMUM) ...

	140	142
Shaft	.002 (0,05) TIR	.002 (0,05) TIR
Pilot Dia.	.002 (0,05) TIR	.002 (0,05) TIR
Lateral	.003 (0,08) TIR	.002 (0,05) TIR
Shaft end play	.006 (0,15)	.004 (0,10)
Shaft radial play	.003 (0,08)	.002 (0,05)

ENVIRONMENTAL

VIBRATION ..... 20G through 2,000 Hz

SHOCK 50G

SALT SPRAY ..... 96 hours

ROTATIONAL LIFE ..... 500,000 shaft revolutions

LOAD LIFE ..... 900 hours

TEMPERATURE RANGE ... −55°C to +125°C (operating)

MATERIALS

SHAFT ..... Stainless steel, non magnetic, passivated.

HOUSING..... Aluminum, anodized

REAR LID ..... Molded glass filled thermoset plastic.

TERMINALS ..... Brass, gold plated.

MOUNTING HARDWARE (MODEL 140 ONLY) ... Lockwasher: internal tooth, steel, nickel plated. Panel nut: brass, nickel plated.

MARKING

Units shall be marked with manufacturer's name, model number, resistance value & tolerance, circuit diagram, terminal identification, linearity & date code.

POWER RATING CHART

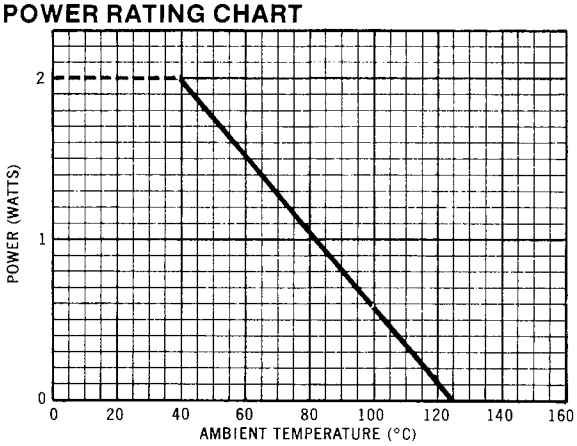

STANDARD RESISTANCE ELEMENT DATA

STD RESISTANCE VALUES (OHMS)	RESOLUTION %	OHMS PER TURN	MAX CURRENT AT 40°C AMBIENT (MILLIAMPS)	MAX VOLTAGE ACROSS COIL (VOLTS)	WIRE TEMP COEF PPM/°C
50	.542	.271	200.	10.0	20
100	.431	.431	141.	14.1	20
200	.361	.722	100.	20.0	20
500	.312	1.56	63.2	31.6	20
1K	.255	2.55	44.7	44.7	20
2K	.197	3.94	31.6	63.2	20
5K	.170	8.50	20.0	100.	20
10K	.147	14.7	14.1	141.	20
20K	.105	21.0	10.0	200.	20
50K	.091	45.6	6.32	316.	20

HOW TO ORDER THE MODEL 140 & 142

This part number consists of four groups of digits. The first group is the SPECTROL Model number. The second digit describes the mechanical options available. The third digit describes the other optional features which can be supplied. The fourth group is the standard EIA resistance code.

140 — 0 — 0 — 203

MODEL NUMBER	MECHANICAL OPTIONS	OTHER OPTIONAL FEATURES	RESISTANCE CODE
Bushing 140	0. Stops, Slotted Shaft (std.) 1. Plain Shaft 2. Shaft Lock 3. Continuous Rotation 4. Combination 1 & 2 5. Combination 1 & 3 6. Combination 2 & 3 7. Combination 1, 2, & 3	0. Standard Torque 1. Center Tap (10K max. Rt) 2. High Torque 3. Sealed Construction 4. Combination 1 & 2 5. Combination 1 & 3 6. Combination 2 & 3 7. Combination 1, 2, & 3	2 0 3 └Number of zeros following └Second significant figure └First significant figure
Servo 142	0. Continuous Rotation, Plain Shaft (std.)	0. Standard Torque 1. Center Tap (10K max. Rt)	Same as above

Example:

Part number 140-0-0-203 describes bushing mount model 140 with stops, slotted shaft, standard torque and resistance of 20K Ω.

SPECTROL ELECTRONICS GROUP

Spectrol Reliance Ltd.
Drakes Way
Swindon, Wiltshire, England
Swindon 21351 • TELEX: 44692

Spectrol Electronics Corporation
17070 E. Gale Ave., P.O. Box 1220
City of Industry, Calif. 91749, U.S.A.
(213) 964-6565 • TWX (910) 584-1314

SP Elettronica spa
Via Carlo Pisacane 7
20016 Pero (Milan) Italy
35 30 241 • TELEX: 330091

See Page 11, headed "Warranty," the contents of which are made a part hereof and included herein by reference.

MODELS 148, 149

ACTUAL SIZE

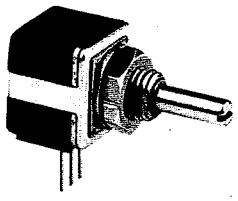

Models 148, 149
Bushing Mount
1/8 Inch Shaft
Single Section

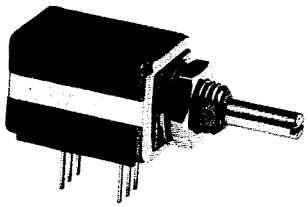

Models 148, 149
Bushing Mount
1/8 Inch Shaft
Two Section

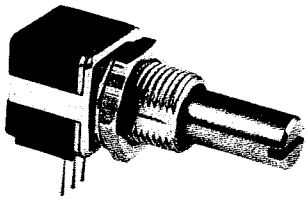

Models 148, 149
Bushing Mount
1/4 Inch Shaft
Single Section

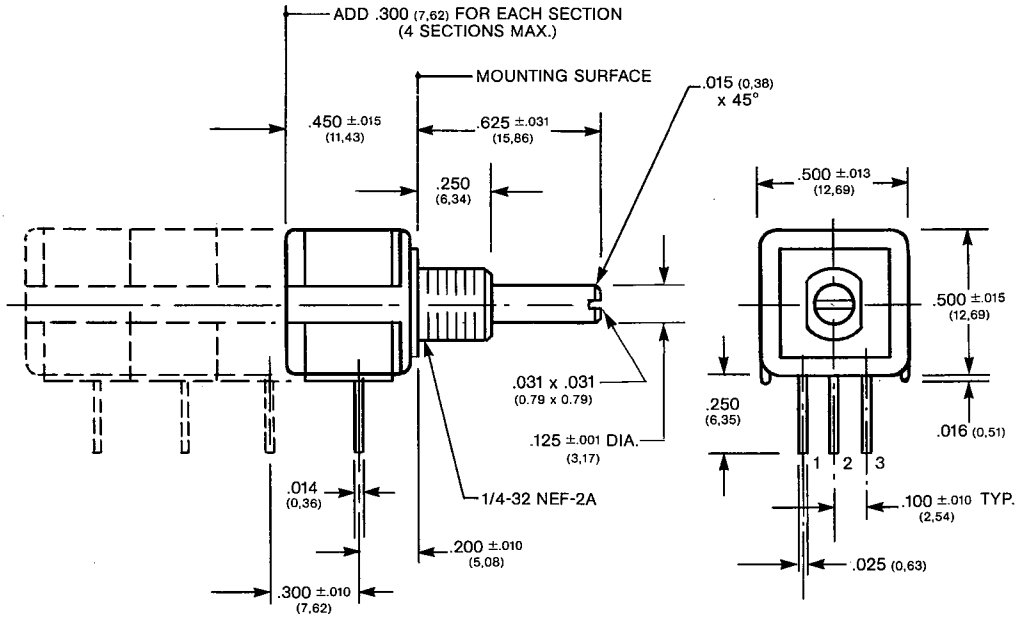

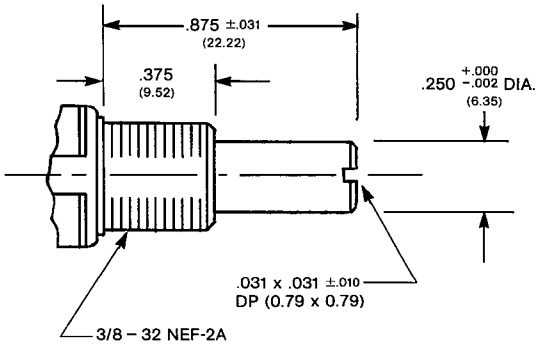

TOLERANCES: UNLESS OTHERWISE NOTED.
DECIMALS ±.005 ANGLES ±2°
BASIC DIMENSIONS ARE IN INCHES
MILLIMETER DIMENSION IN PARENTHESES

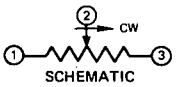

SCHEMATIC

SPECIFICATIONS

ELECTRICAL	MODEL 148	MODEL 149
ELEMENT TYPE	Conductive Plastic	Cermet
TOTAL RESISTANCE RANGE	100 Ω to 1 Meg	100 Ω to 2 Meg
RESISTANCE TOLERANCE	±20%	±10%
POWER RATING PER SECTION	0.5 watt at 70°C ambient derated to zero at 125°C	1.0 watt at 85°C ambient derated to zero at 150°C
TEMPERATURE COEFFICIENT OF RESISTANCE	±500 ppm/°C nominal	±150 ppm/°C
LINEARITY TOLERANCE	±5% independent	±5% independent
CONTACT RESISTANCE VARIATION	1.5% of total resistance	3% of total resistance
INSULATION RESISTANCE	1,000 megohms min., 500 VDC	1,000 megohms min., 500 VDC
DIELECTRIC STRENGTH	750 volts rms min., 60 Hz	750 volts rms min., 60 Hz
END RESISTANCE	2 Ω maximum each end	2 Ω maximum each end
ROTATION	265° ±5°	265° ±5°

MECHANICAL		
ROTATION	295° ±5°	295° ±5°
TORQUE, STARTING AND RUNNING	0.3 to 3.0 oz-in (21.6 to 216 gm-cm)	0.3 to 3.0 oz-in (21.6 to 216 gm-cm)
STOP STRENGTH	48 oz-in (.339 n-m)	48 oz-in (.339 n-m)
WEIGHT, SECTION 1	0.2 oz (5.67 gm)	0.2 oz (5.67 gm)
ADDITIONAL SECTIONS	0.06 oz (1.70 gm)	0.06 oz (1.70 gm)

ENVIRONMENTAL		
OPERATING TEMPERATURE	−55°C to 125°C	−55°C to 150°C
SHOCK	30 g's	30 g's
VIBRATION	15 g's 10 to 2,000 Hz	15 g's 10 to 2,000 Hz
RESISTANCE TO SOLDER HEAT	350°C for 5 seconds	350°C for 5 seconds
ROTATIONAL LIFE	50,000 cycles	25,000 cycles
LOAD LIFE	1,000 hours	1,000 hours
MOISTURE RESISTANT		

MATERIALS		
SHAFT	Brass, nickel plated	Brass, nickel plated
FRONT LID	Stainless steel	Stainless steel
HOUSING AND REAR LID	Molded plastic	Molded plastic
BUSHING	Metal, plated	Metal, plated
TERMINALS	Plated for solderability	Plated for solderability
MOUNTING HARDWARE	Lockwasher: steel, nickel plated Panel nut: brass, nickel plated	Lockwasher: steel, nickel plated Panel nut: brass, nickel plated

RESISTANCE VALUES (OHMS)

100	2500	50,000	1 Meg
250	5000	100,000	2 Meg (149 only)
500	10,000	250,000	
1000	25,000	500,000	

Some of the special features that can be provided with the Models 148 and 149 include:

- Sealed Construction
- Non-turn Lug
- Shaft Lock
- J-Hook Lugs
- Stand-offs or Support Plates
- Shaft Lengths
- Non-linear Tapers
- Variable Attenuators
- Ganging to 4 Cups
- Dual Concentric Shafts
- Plastic Shaft
- Special Linearity Tolerances
- Special Resistance Tolerances
- Rotary Switch—Transfers at CCW End

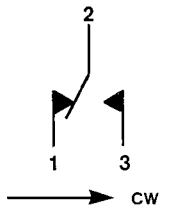

SWITCH SCHEMATIC

How to order the models 148, 149

Models may be ordered from this specification sheet by stating:
1. Model 148 or 149
2. Shaft size: 1/8 or 1/4 (bushing size shall be 1/4-32 or 3/8-32 respectively)
3. Total resistance of each section beginning with section nearest shaft

Examples:

148, 1/8, 1K/5K
149, 1/4, 1K/10K/5K

SPECTROL ELECTRONICS GROUP

Spectrol Reliance Ltd.
Drakes Way
Swindon, Wiltshire, England
Swindon 21351 • TELEX: 44692

Spectrol Electronics Corporation
17070 E. Gale Ave., P.O. Box 1220
City of Industry, Calif. 91749, U.S.A.
(213) 964-6565 • TWX (910) 584-1314

SP Elettronica spa
Via Carlo Pisacane 7
20016 Pero (Milan) Italy
35 30 241 • TELEX: 330091

See Page 11, headed "Warranty," the contents of which are made a part hereof and included herein by reference.

MODELS 162,164

ACTUAL SIZE

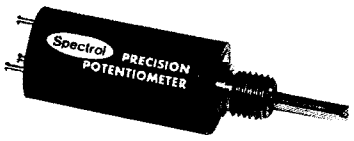

Model 162
Bushing Mount

Model 164
Servo Mount

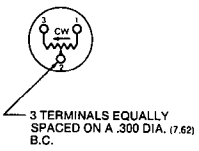

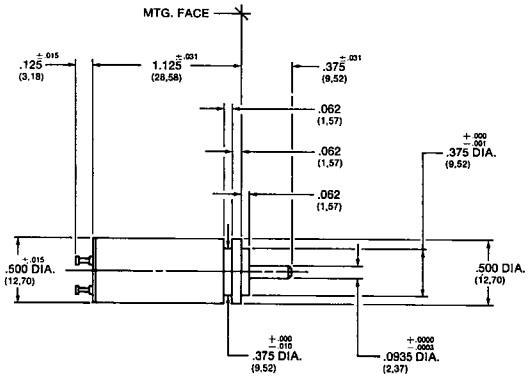

SERVO MOUNT
Model 164

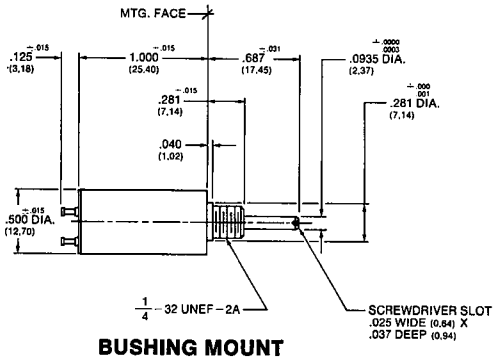

BUSHING MOUNT
Model 162

TOLERANCES: UNLESS OTHERWISE NOTED.
DECIMALS ±.005 ANGLES ±2°
BASIC DIMENSIONS ARE IN INCHES
MILLIMETER DIMENSION IN PARENTHESES

SCHEMATIC

SPECIFICATIONS (MIL-R-12934 Test Procedures Apply)

ELECTRICAL

TOTAL RESISTANCE	Standard Range: 100Ω to 100KΩ, Special to 115KΩ Tolerance: Standard ±5%, Special ±1%
LINEARITY (Independent)	Standard: ±0.30%, Best Practical ±0.15%
NOISE	100 ohms ENR
ROTATION	3600° +15° −0°
POWER RATING	Section 1: 2.0 watt at 40°C ambient, derated to zero at 125°C
INSULATION RESISTANCE	100 megohms min., 500 vdc
DIELECTRIC STRENGTH	500 volts rms, 60 Hz
ABSOLUTE MIN. RESISTANCE	Linearity X total resistance or 0.5, Ω whichever is greater
END VOLTAGE	Linearity X total applied voltage for total resistance above 20 ohms, 2.0% of total applied voltage for 20 ohms and below

MECHANICAL

ROTATION ..... 3600° +15° −0°

		162 Sleeve	164 Ball
BEARING TYPE			
TORQUE (MAXIMUM) oz-in (gm-cm)	Starting:	0.8 (57,60)	0.4 (28,80)
	Running:	0.6 (43,20)	0.3 (21,60)
RUNOUTS (MAXIMUMS)	Shaft (TIR):	.003 (0,08)	.002 (0,05)
	Pilot Dia. (TIR):	.003 (0,08)	.003 (0,08)
	Lateral (TIR):	.005 (0,13)	.003 (0,08)
	Shaft End Play:	.010 (0,25)	.005 (0,13)
	Shaft Radial Play:	.003 (0,08)	.002 (0,05)

WEIGHT (MAXIMUMS) ..... 0.3 oz (8,50gm) maximum
STOP STRENGTH ..... 20 oz-in (static) (1.44 Kgm-cm)

MATERIALS

HOUSING & LID	Molded, glass filled, thermoset plastic
BUSHING	Brass, nickel plated (162 only)
FRONT LID	Aluminum, anodized (164 only)
SHAFT	Stainless steel, passivated
TERMINALS	Brass, plated for solderability
BUSHING MOUNT HARDWARE (162 only)	Lockwasher: Internal tooth, steel, nickel plated Panel Nut: Brass, nickel plated

ENVIRONMENTAL

VIBRATION	15G thru 2000 Hz
SHOCK	50G
SALT SPRAY	48 hours
ROTATIONAL LIFE	500,000 shaft revolutions
TEMPERATURE RANGE	−55°C to +125°C
MOISTURE RESISTANT	

MARKING

Units shall be marked with Spectrol name and Model No., resistance and resistance tolerance, linearity, terminal identification and date code.

POWER RATING CHART

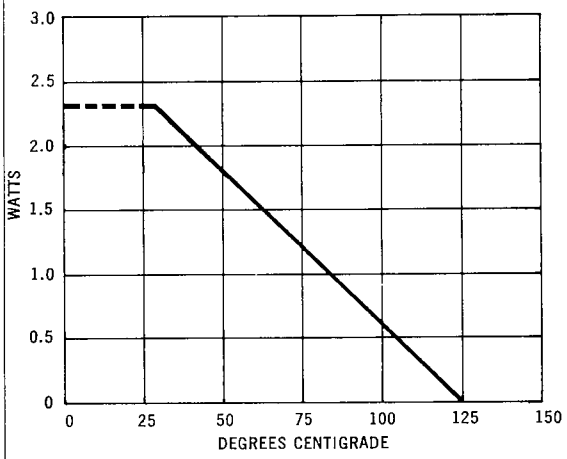

RESISTANCE ELEMENT CHART

RESISTANCE VALUES (ohms)	RESO-LUTION (%) (nominal)	OHMS PER TURN	MAXIMUM CURRENT AT 40°C AMBIENT (milliamps)	MAXIMUM VOLTAGE ACROSS COIL (volts)	WIRE TEMP. COEF. (PPM/°C)
100	.092	.092	141	14	20
200	.069	.138	100	20	20
500	.049	.245	63	32	20
1K	.047	.470	45	45	20
2K	.038	.763	32	64	20
5K	.031	1.56	20	100	20
10K	.025	2.55	14	140	20
20K	.020	3.94	10	200	20
30K	.018	5.34	8.2	246	20
50K	.015	7.64	6.3	315	20
100K	.013	13.2	4.5	450	20

HOW TO ORDER THE MODEL 162 AND 164

The Model 162 and 164 can be ordered from this specification sheet with a variety of alternate characteristics, as shown. For most rapid service on orders, state:

1. Model 162 or 164.
2. The total resistance.

NOTE: Model 164 is not distributor item
Example—Model 162, 10K.

Other characteristics will be standard as described on this specification sheet. If special characteristics are required, such as: special linearity tolerance, special resistance tolerance, extra taps, non-linear functions, etc., please state these on your order and allow additional lead time for delivery.

SPECTROL ELECTRONICS GROUP

Spectrol Reliance Ltd.
Drakes Way
Swindon, Wiltshire, England
Swindon 21351 • TELEX: 44692

Spectrol Electronics Corporation
17070 E. Gale Ave., P.O. Box 1220
City of Industry, Calif. 91749, U.S.A.
(213) 964-6565 • TWX (910) 584-1314

SP Elettronica spa
Via Carlo Pisacane 7
20016 Pero (Milan) Italy
35 30 241 • TELEX: 330091

See Page 11, headed "Warranty," the contents of which are made a part hereof and included herein by reference.

MODELS 533, 534, 535

■ 3/4-INCH LENGTH ■ HIGH POWER RATING ■ 2-GANG UNIT AVAILABLE AS STANDARD
■ RUGGED INTEGRATED CONSTRUCTION ■ EXTRA-TAP OPTIONS ■ SUPERIOR STOP STRENGTH

ACTUAL SIZE

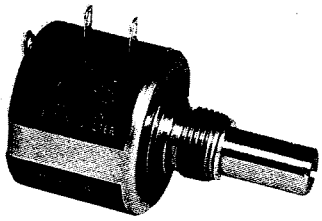

Models 533, 534, 535
Bushing Mount
Single Section

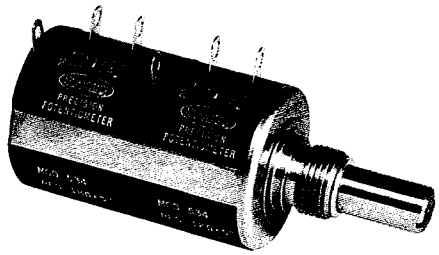

Models 533, 534, 535
Bushing Mount
Two Section

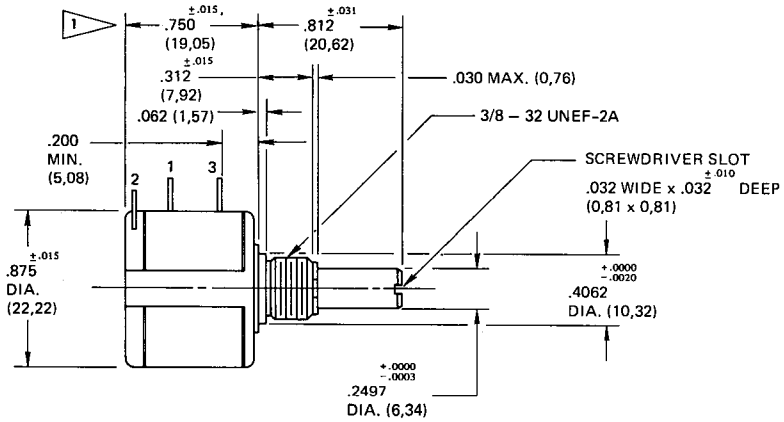

BUSHING MOUNT

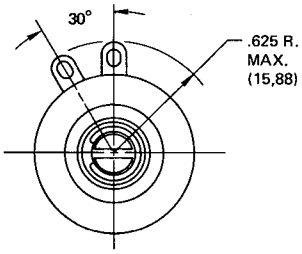

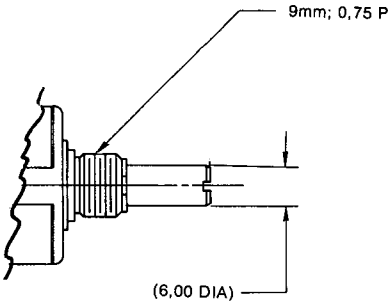

METRIC SHAFT/BUSHING THREAD

TOLERANCES: UNLESS OTHERWISE NOTED.
DECIMALS ±.005 ANGLES ±2°
BASIC DIMENSIONS ARE IN INCHES
MILLIMETER DIMENSIONS IN PARENTHESES

1 ADD .695 (17,65) FOR 2 SECTION UNIT

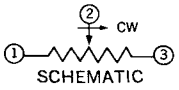

SCHEMATIC

SPECIFICATIONS (Unless otherwise noted, specifications are applicable to all models)

ELECTRICAL

TOTAL RESISTANCE	MODEL 533	Range (ohms) 5 to 60K Standard values (ohms) 50 to 20 K Standard tolerance: ±5% Special to: ±2%
	MODEL 534	Range (ohms) 10 to 200K Standard values (ohms) 100 to 100 K Standard tolerance: ±5% Special to: ±1%
	MODEL 535	Range (ohms) 5 to 100K Standard values (ohms) 50 to 50K Standard tolerance: ±5% Special to: ±2%
LINEARITY (INDEPENDENT)	±0.25%	
NOISE	100 ohms ENR	
ROTATION	MODEL 533	1080° + 10° – 0°
	MODEL 534	3600° + 10° – 0°
	MODEL 535	1800° + 10° – 0°
POWER RATING (@ 70°C)	MODEL 533	1.0 watt
	MODEL 534	2.0 watts
	MODEL 535	1.5 watts
	All units derated to zero at 125°C	
	Additional sections: 75% of section 1	
INSULATION RESISTANCE	1000 megohms min., 500 vdc	
DIELECTRIC STRENGTH	1000 volts rms min., 60 Hz	
ABSOLUTE MIN. RESISTANCE	Not to exceed linearity x total resistance or 1Ω, whichever is greater	
TEMPCO	20 PPM/°C (standard values, wire only)	
END VOLTAGE	0.25% of total applied voltage, maximum	
PHASING	CCW end points–section 2 phased to section 1 within ±2°	
TAPS	Center tap only	

MARKING

Units shall be marked with Spectrol name and model No., resistance and tolerance, linearity, terminal identification and date code

MECHANICAL

ROTATION	MODEL 533	1080° + 10° – 0°
	MODEL 534	3600° + 10° – 0°
	MODEL 535	1800° + 10° – 0°

MECHANICAL (Cont.)

BEARING TYPE	Bushing: sleeve bearing
TORQUE (MAXIMUMS) (BUSHING AND SERVO MOUNT) OZ-IN. (GM-CM)	Starting 534 / 533,535 1 Section 0.5 (36) / 0.7 (50) 2 Section 0.9 (65) / 1.1 (79)
MECHANICAL RUNOUTS (MAXIMUMS)	Bushing Shaft runout (TIR/IN): .003 (0,08) Pilot dia. runout (TIR): .003 (0,08) Lateral runout (TIR): .005 (0,13) Shaft end play: .010 (0,25) Shaft radial play: .003 (0,08)
WEIGHT (MAXIMUMS)	1 Section 0.75 oz (21.26 gm) 2 Section 1.25 oz (35.44 gm)
STOP STRENGTH	75 oz-in. (static) (5.4 Kgm cm)
GANGING	2 sections maximum

ENVIRONMENTAL

VIBRATION	15g thru 2000 Hz
SHOCK	50g
ROTATIONAL LIFE (SHAFT REVOLUTIONS)	533: 300,000 534: 1,000,000 535: 500,000
LOAD LIFE	900 hours
TEMPERATURE RANGE	–55°C to +125°C
MOISTURE RESISTANT SALT SPRAY	96 hours

MATERIALS

FRONT LID	Stainless steel, nickel plated brass (bushing)
HOUSING	Molded glass filled thermoset plastic
REAR LID	Molded glass filled nylon
SHAFT	Stainless steel, non-magnetic, passivated
TERMINALS	Brass, plated for solderability
MOUNTING HARDWARE	Lockwasher: internal tooth, steel, nickel plated Panel nut: brass, nickel plated

POWER RATING CHART

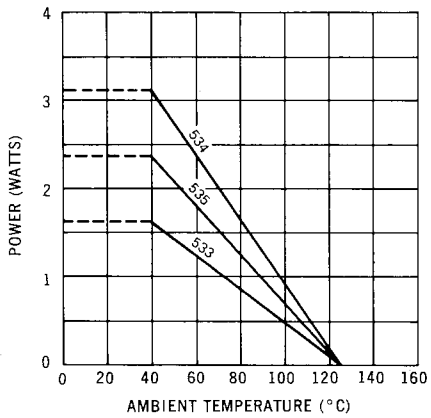

RESISTANCE ELEMENT DATA

RESISTANCE VALUES (OHMS)			RESOLUTION %			OHMS PER TURN			MAX CURRENT AT 70°C AMBIENT (MILLIAMPS)			MAX VOLTAGE ACROSS COIL (VOLTS)		
533	534	535	533	534	535	533	534	535	533	534	535	533	534	535
50	–	50	.149	–	.120	.0746	–	.0603	141.0	–	173.0	7.07	–	8.66
100	100	100	.111	.060	.075	.1114	.0603	.0746	100.0	141.0	122.0	10.0	14.1	12.2
200	200	200	.097	.037	.061	.1954	.0746	.1220	70.7	100.0	86.6	14.1	20.0	17.3
500	500	500	.069	.031	.049	.3424	.1520	.2459	44.7	63.2	54.7	22.4	31.6	27.4
1K	1K	1K	.063	.025	.041	.6331	.2459	.4113	31.6	44.7	38.7	31.6	44.7	38.7
2K	2K	2K	.041	.021	.031	.8206	.4113	.6331	22.4	31.6	27.4	44.7	63.2	54.8
5K	5K	5K	.044	.016	.034	2.2330	.8206	1.7230	14.1	20.0	17.3	70.7	100.0	86.6
10K	10K	10K	.034	.017	.030	3.4510	1.7230	3.0160	10.0	14.1	12.2	100.0	141.0	122.0
20K	20K	20K	.031	.015	.020	6.1790	3.0160	3.9910	7.07	10.0	8.66	141.0	200.0	173.0
–	50K	50K	–	.009	.015	–	4.6690	7.4560	–	6.32	5.47	–	316.0	274.0
–	100K	–	–	.007	–	–	7.4560	–	–	4.47	–	–	447.0	–
–	–	–	–	–	–	–	–	–	–	–	–	–	–	–
–	–	–	–	–	–	–	–	–	–	–	–	–	–	–

HOW TO ORDER THE MODEL 533, 534, OR 535

Models can be ordered from this specification sheet by stating:

1. Model 533, 534, or 535.
2. Mounting type (bushing or Metric Shaft/thread).
3. The total resistance of each section, beginning with the section nearest the mounting end.
4. The number of sections desired.

Example: Model 534, Metric Shaft/thread, 10K, single section.
Example: Model 533, bushing, 10K/100K, 2 section.
Example: Model 534, bushing, 100K, single section.
Example: Model 535, bushing, 20K, single section.

Except where otherwise noted, all characteristics described on this sheet are standard. If special characteristics are required, please state these on your order. Some of the special features that can be provided are: extra taps, special linearity tolerance, special resistance tolerance, non-linear functions, plastic shaft or combination metal-plastic shaft, rear shaft extension, dual concentric shafts, high shaft torque, special shaft diameters, mounting configurations, non-turn pin, sealed units for high humidity applications, and ⅛ dia. shaft with ¼-32 bushing thread.

SPECTROL ELECTRONICS GROUP

Spectrol Reliance Ltd.
Drakes Way
Swindon, Wiltshire, England
Swindon 21351 • TELEX: 44692

Spectrol Electronics Corporation
17070 E. Gale Ave., P.O. Box 1220
City of Industry, Calif. 91749, U.S.A.
(213) 964-6565 • TWX (910) 584-1314

SP Elettronica spa
Via Carlo Pisacane 7
20016 Pero (Milan) Italy
35 30 241 • TELEX: 330091

See Page 11, headed "Warranty," the contents of which are made a part hereof and included herein by reference.

MODELS 830,860

ACTUAL SIZE

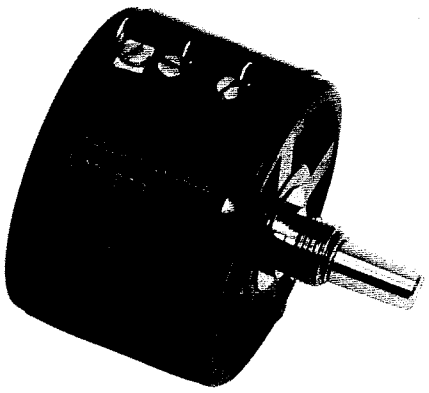

Model 830
Three-Turn

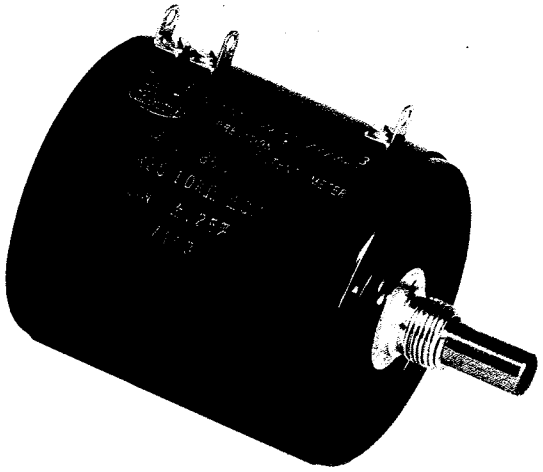

Model 860
Ten-Turn

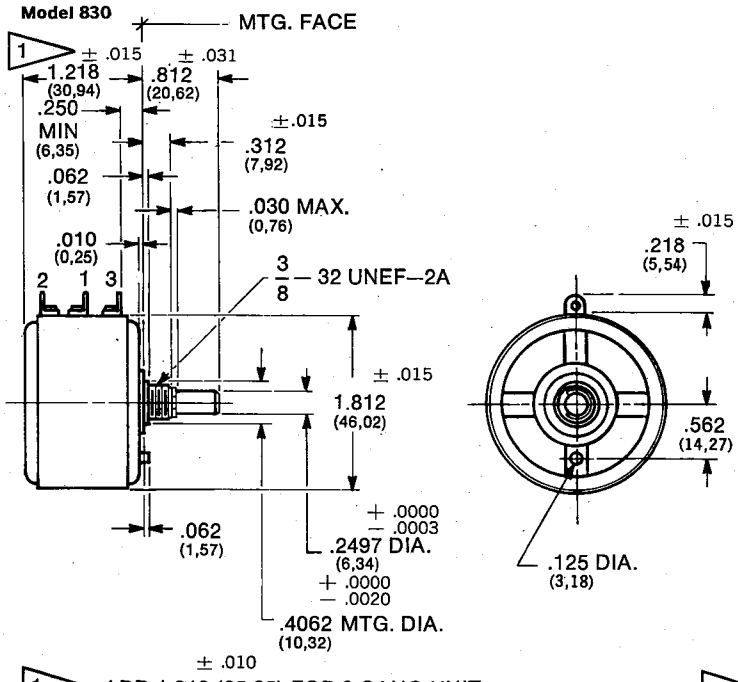

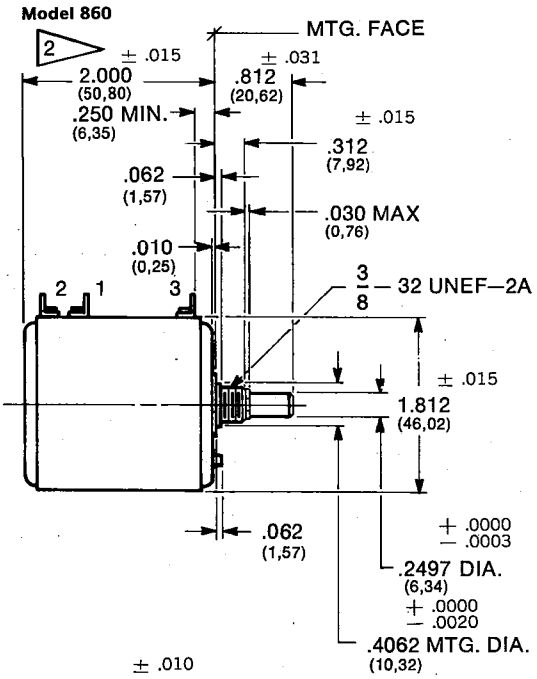

1 ADD 1.010 (25,65) FOR 2 GANG UNIT. ± .010

2 ADD 1.787 (45,39) FOR 2 GANG UNIT. ± .010

TOLERANCES: UNLESS OTHERWISE NOTED.
DECIMALS ± .005 ANGLES ±2°
BASIC DIMENSIONS ARE IN INCHES
MILLIMETER DIMENSIONS IN PARENTHESES

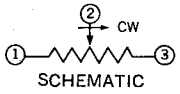

SCHEMATIC

SPECIFICATIONS (MIL-R-12934 Test Procedures Apply)

(Unless otherwise noted, specifications are applicable to both 830 and 860.)

ELECTRICAL

TOTAL RESISTANCE ..... Standard Range (830) 15Ω to 50KΩ, Special to 150KΩ
(860) 20Ω to 200KΩ, Special to 500KΩ

Tolerance:
200Ω and above: Standard ±3%, Special to ±1%
Below 200Ω: Standard ±5%, Special to ±3%

LINEARITY (INDEPENDENT) ... ±0.25% Standard

(830) Total Resistance	Best Practical
15Ω to 1KΩ	±.15%
1KΩ to 5KΩ	±.10%
5KΩ to 25KΩ	±.075%
25KΩ and above	±.05%
(860) 20Ω to 50Ω	±.15%
50Ω to 200Ω	±.10%
200Ω to 5KΩ	±.05%
5KΩ and above	±.025%

NOISE ..... 100 Ohms ENR
ROTATION ..... (830) 1080° + 4° − 0°
(860) 3600° + 4° −0°
POWER RATING ..... (830) 3.0 Watts at 40°C derated to zero at 125°C
(860) 8.0 Watts at 40°C derated to zero at 125°C
INSULATION RESISTANCE .... 1,000 megohms min., 500 vdc
DIELECTRIC STRENGTH ..... 1000 volts RMS, 60 Hz
ABSOLUTE MINIMUM RESISTANCE ..... Not to exceed linearity X total resistance or 1Ω whichever is greater
END VOLTAGE ..... 0.5% of total applied voltage maximum
PHASING ..... CCW end points : sect. 2 phased to sect 1 within 1°
TAPS (EXTRA) ..... (830) 42 available as special, standard tolerance ±1°
(860) 108 available as special, standard tolerance ±1°

MECHANICAL

ROTATION ..... (830) 1080° + 4° − 0°
(860) 3600° + 4° − 0°
BEARING TYPE ..... Sleeve Bearing
TORQUE (MAXIMUMS) oz-in (gm-cm) ..... 1 section: Starting 1.75 (126,02)
Running 1.26 (90,01)
2 section: Starting 2.55 (183,62)
Running 1.85 (133,21)
RUNOUTS (MAXIMUMS) ..... Shaft : .002 TIR (0,05)
Pilot Dia. : .002 TIR (0,05)
Lateral : .005 TIR (0,13)
Shaft End Play: .002 Min. − .010 Max. (0,05-0,25
Shaft Radial Play: .003 Max. (0,08)
WEIGHT (MAXIMUM) oz (gm) ... (830) Single Section 3.0 (85,05)
Addition Section 2.5 (70,80)
(860) Single Section: 4.5 (127,58)
Additional Section 4.0 (113,40)
STOP STRENGTH ..... 750 oz-in (Static) (54,01 kgm-cm)
GANGING ..... 2 sections Max., ears of clamp band between sections positioned 45° ± 10° CCW from terminal center line
MOMENT OF INERTIA ..... (830) 5.5 gm-cm² Max
(860) 15.0 gm-cm² Max

MATERIALS

BUSHING ..... Aluminum, nickel plated
HOUSING AND FRONT LID .... Molded glass filled thermoset plastic
REAR LID ..... Molded glass filled nylon
SHAFT ..... Stainless steel, non magnetic, passivated
TERMINALS ..... Brass, plated for solderability
MOUNTING HARDWARE ..... Lockwasher: internal tooth, steel, nickel plated
Panel nut: brass, nickel plated

ENVIRONMENTAL

VIBRATION ..... 10G thru 500 CPS
SHOCK ..... 50 G
ROTATIONAL LIFE ..... 500,000 shaft revolutions
LOAD LIFE ..... 900 hours
TEMPERATURE RANGE ..... −55°C to +125°C
MOISTURE RESISTANT
SALT SPRAY ..... 48 hours

MARKING

Units shall be marked with Spectrol name and Model No., resistance and resistance tolerance, linearity, terminal identification, and date code.

POWER RATING CHART

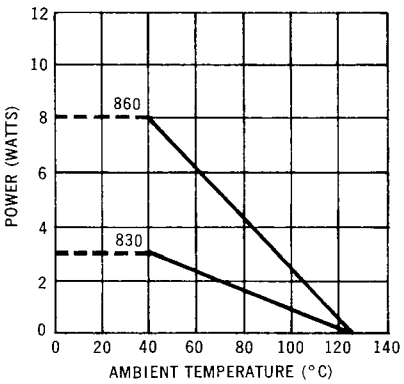

RESISTANCE ELEMENT DATA

Model 860

RESISTANCE VALUES (OHMS)	RESOLUTION %	OHMS PER TURN	MAX CURRENT AT 40°C AMBIENT (MILLI-AMPS)	MAX VOLTAGE ACROSS COIL (VOLTS)	WIRE TEMP COEF PPM/°C
20	.044	.009	632	13	800
50	.027	.014	400	20	800
100	.024	.024	283	28	800
200	.028	.056	200	40	180
500	.023	.115	126	63	20
1K	.018	.182	89	89	20
2K	.020	.402	63	126	110
5K	.015	.754	40	200	20
10K	.013	1.23	28	283	20
20K	.010	1.97	20	400	20
50K	.007	3.69	13	632	20
100K	.007	6.51	8.9	894	20
200K	.005	9.63	5.0	1,000	20
500K	.004	20.0	2.0	1,000	20

Model 830

RESISTANCE VALUES (OHMS)	RESOLUTION %	OHMS PER TURN	MAX CURRENT AT 40°C AMBIENT (MILLI-AMPS)	MAX VOLTAGE ACROSS COIL (VOLTS)	WIRE TEMP COEF PPM/°C
20	.094	.019	387	8	800
50	.074	.037	245	12	800
100	.071	.071	173	17	180
200	.072	.145	122	25	20
500	.064	.320	77	39	110
1K	.050	.500	55	55	110
2K	.047	.948	39	77	20
5K	.035	1.73	24	125	20
10K	.029	2.92	17	176	20
20K	.024	4.80	12	250	20
50K	.017	8.31	8	375	20
100K	.015	14.5	5	600	20
150K	.013	20.0	4	750	20

HOW TO ORDER THE MODELS 830 & 860

The Models 830 and 860 can be ordered from this specification sheet by stating:

1. Model No. (830 or 860)
2. The total resistance of each section, beginning with the section nearest the mounting end. — Example — Model 860 1K/10K 2 sections.
3. The number of sections desired. — Example — Model 860 20K single section.

Other characteristics will be standard as described on this specification sheet. If special characteristics are required such as: special linearity tolerance, special resistance tolerance, extra taps, non-linear functions, etc., please state these on your order.

SPECTROL ELECTRONICS GROUP

Spectrol Reliance Ltd.
Drakes Way
Swindon, Wiltshire, England
Swindon 21351 • TELEX: 44692

Spectrol Electronics Corporation
17070 E. Gale Ave., P.O. Box 1220
City of Industry, Calif. 91749, U.S.A.
(213) 964-6565 • TWX (910) 584-1314

SP Elettronica spa
Via Carlo Pisacane 7
20016 Pero (Milan) Italy
35 30 241 • TELEX: 330091

See Page 11, headed "Warranty," the contents of which are made a part hereof and included herein by reference.

MODEL 87

- MOUNTS DIRECTLY ON PRINTED CIRCUIT BOARD
- LOW PROFILE COMPATIBLE WITH OTHER PCB COMPONENTS
- ELIMINATES NEED FOR JUMPERS AND CONNECTORS
- STANDARD MODELS AVAILABLE IN SINGLE-POLE, DOUBLE-POLE AND THREE-POLE VERSIONS
- DESIGN VERSATILITY PERMITS UNLIMITED APPLICATIONS AND MANY COST-SAVING BENEFITS

87-11-XX
Screwdriver Adjust

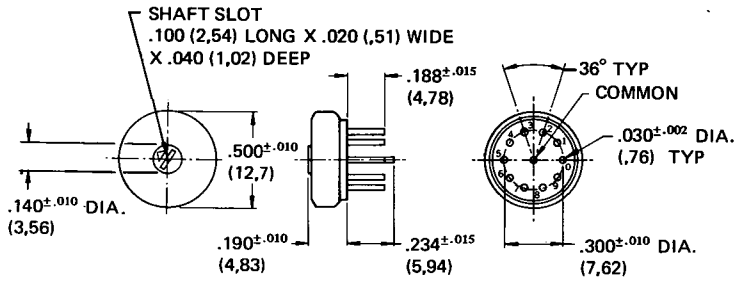

87-21-XX
Knob Adjust

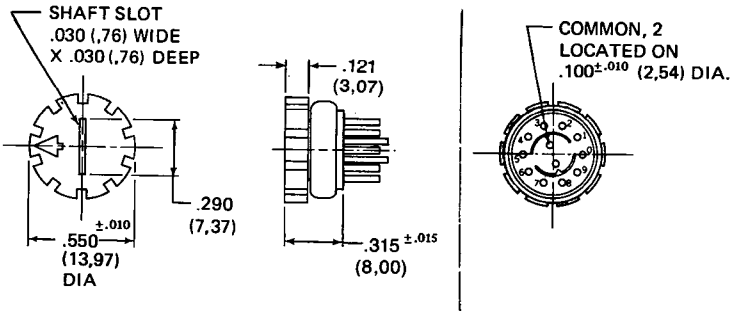

87-31-XX
Threaded Bushing Mount

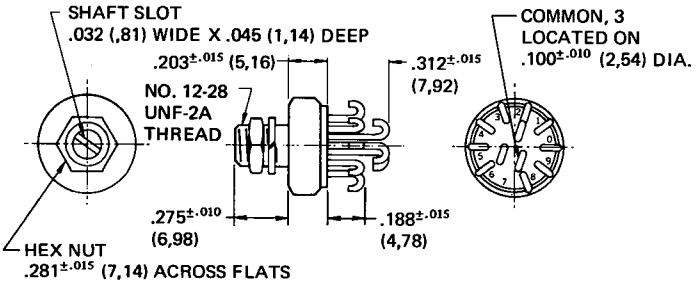

TOLERANCES: UNLESS OTHERWISE NOTED.
DECIMALS ±.005 ANGLES ±2°
BASIC DIMENSIONS ARE IN INCHES
MILLIMETER DIMENSIONS IN PARENTHESES

All Styles Available in 1, 2, and 3-Pole Versions.

SPECIFICATIONS
(per MIL-STD-202B where method is noted)

MECHANICAL

ROTATIONAL LIFE	4,000 switching operations per position
WEIGHT	3.0 grams maximum
SWITCH ACTION	Positive detent, 36° indexing
STOP STRENGTH	15 oz.-in. maximum (1,08 Kgm.-cm.)

ELECTRICAL

SWITCH TYPE	1 to 3 poles, 2 to 10 positions, non-shorting
CONTACT RESISTANCE	0.05Ω maximum (method 307)
CONTACT CURRENT RATING	250 MA at 28 V DC
DIELECTRIC WITHSTANDING VOLTAGE	1,000 volts AC at sea level (method 301); 350 volts AC at 80,000 ft. (method 105B); (pin to pin or pins to case)
INSULATION RESISTANCE	1,000 megohms (method 302, cond. A)
CAPACITANCE	2 picofarads max. (pin to pin, pin to case)

ENVIRONMENTAL

MOISTURE RESISTANCE	Contact resistance change (±0.05Ω) and insulation resistance not less than 10 megohms (method 106)
VIBRATION	20 G's to 2,000 Hz (method 204, test cond. D)
SHOCK	50 G's 11 MS (method 205B)
SALT SPRAY	96 hours (method 101, test cond. A)
FUNGUS RESISTANCE	Non-nutrient
LOW TEMP. OPERATION	−65°C
HIGH TEMP. EXPOSURE	+150°C
TERMINAL STRENGTH	2 lbs. (,9 Kgm.) minimum (pull test parallel to axis)
EFFECT OF SOLDERING	Maximum contact resistance change ±0.05Ω
THERMAL SHOCK	Maximum contact resistance change ±0.05Ω, −65° to +125°C (method 107A, test cond. B)
SEALED	Sealed to permit cleaning in common solvents

MARKING
MANUFACTURER'S NAME, PART NUMBER AND TERMINAL DESIGNATION.

TYPICAL APPLICATIONS

- Logic switching.
- Internal switching device for optional equipment add-ons.
- Test point switching.
- Adapting main-frame computers to peripheral equipment.
- Standardizing printed circuit boards.
- Selecting operational voltages.
- Selecting calibration resistors.

NUMBER OF POLES AND ACTIVE POSITIONS

NUMBER OF POLES	ACTIVE POSITIONS	ACTIVE TERMINAL PIN NUMBERS	BASIC PART NUMBER
SINGLE-POLE	1	1 (ON–OFF)	87-XX-11
	2	1 and 2	87-XX-12
	3	1 thru 3	87-XX-13
	4	1 thru 4	87-XX-14
	5	1 thru 5	87-XX-15
	6	1 thru 6	87-XX-16
	7	1 thru 7	87-XX-17
	8	1 thru 8	87-XX-18
	9	1 thru 9	87-XX-19
	10	1 thru 10	87-XX-10
TWO-POLE	1	3 and 8 (ON–OFF)	87-X1-21
	2	2, 3, 7, and 8	87-X1-22
	3	2, 3, 4, 7, 8, and 9	87-X1-23
	4	1 thru 4, 6 thru 9	87-X1-24
	5	1 thru 10	87-X1-25
THREE-POLE	1	1, 4, and 8 (ON–OFF)	87-X1-31
	2	1, 2, 4, 5, 8, and 9	87-X1-32
	3	1 thru 6, 8 thru 10	87-X1-33

HOW TO ORDER THE MODEL 87

The Model 87 can be ordered from this specification sheet by stating:

87 - 11 - 13

MODEL NUMBER	STANDARD AVAILABLE FEATURES	ROTATIONAL TYPE	NUMBER OF POLES	ACTIVE POSITIONS PER POLE
87	1. Screwdriver adjust, printed circuit pins 2. Knob adjust, printed circuit pins 3. 12-28 threaded bushing mount, screwdriver adjust, solder hooks	1. Stops 2. Continuous (Single pole only)	1. One 2. Two 3. Three	1 thru 0 indicates active positions per pole (0 = 10). Single pole maximum of 10 positions per pole. Double pole maximum of 5 positions per pole, three pole maximum of 3 positions per pole.

It can be seen from the example that the sample part number 87-11-13 refers to the standard Model 87 switch with printed circuit pins, screwdriver adjust; stops, single pole, three positions. Standoffs are available on a spec standard basis. Additionally, spec features such as special shaft and pin lengths, special pin configurations, thumb wheel knobs, etc. are available.

SPECTROL ELECTRONICS GROUP

Spectrol Reliance Ltd.
Drakes Way
Swindon, Wiltshire, England
Swindon 21351 • TELEX: 44692

Spectrol Electronics Corporation
17070 E. Gale Ave., P.O. Box 1220
City of Industry, Calif. 91749, U.S.A.
(213) 964-6565 • TWX (910) 584-1314

SP Elettronica spa
Via Carlo Pisacane 7
20016 Pero (Milan) Italy
35 30 241 • TELEX: 330091

See Page 11, headed "Warranty," the contents of which are made a part hereof and included herein by reference.

MODEL 11

ACTUAL SIZE

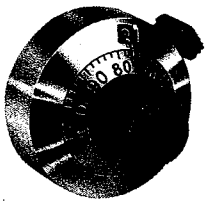

Model 11

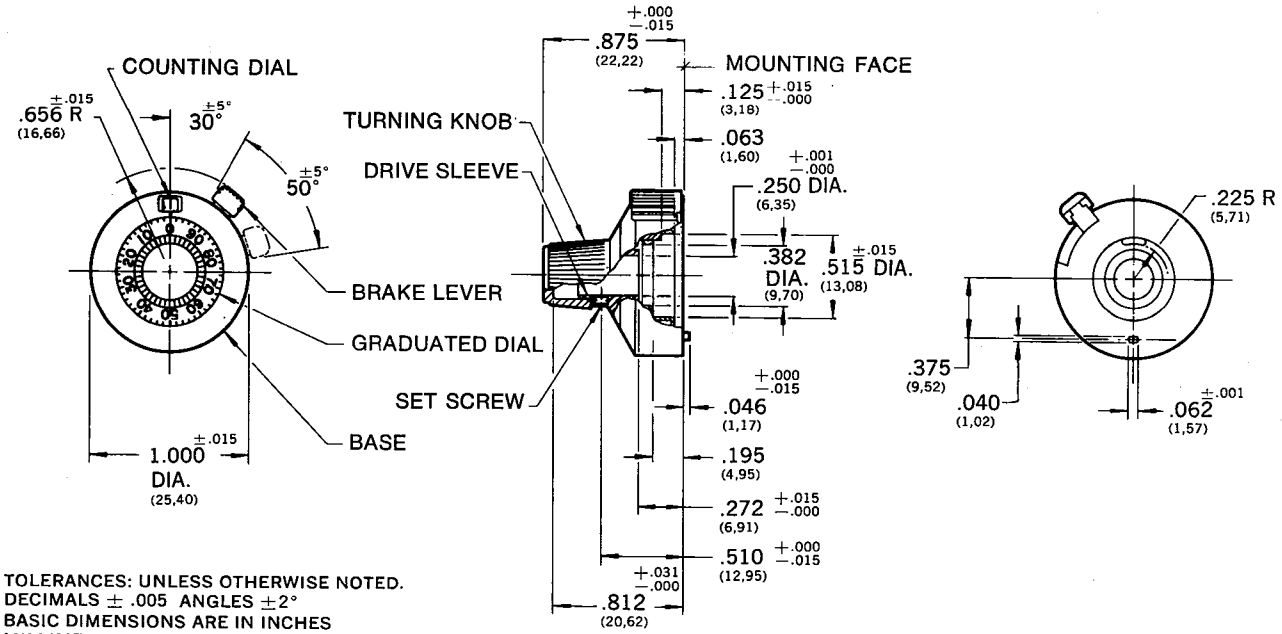

TOLERANCES: UNLESS OTHERWISE NOTED.
DECIMALS ± .005 ANGLES ±2°
BASIC DIMENSIONS ARE IN INCHES
MILLIMETER DIMENSIONS IN PARENTHESES

SPECIFICATIONS:

INDICATION ..... Single counter type wheel and a graduated circular dial registering a total count of 1099

ROTATION ..... Increasing indication: CW direction
Decreasing indication: CCW direction

RUNOUT ..... Dial to be free running and without binds with axis of drive sleeve perpendicular or in any position within .004 per inch (0,10) out of perpendicular with the mounting face.

OPERATION ..... Single numeral in window (0 thru 10) indicates completed number of turns of the drive sleeve
Graduated circular dial indicates the percent of a partial turn of the drive sleeve

ACCURACY ..... Zero backlash between graduated dial and the drive sleeve

MOUNTING ..... Directly to shaft with #2-56 spline socket set screw
Drive sleeve set screw on lower side of vertical center line with a graduated circular dial reading of 0

TRANSFER POINT ..... Between 97 and 0

FINISH ..... Exposed metal parts: satin chromium plated
Turning knob and brake lever knob: black plastic
Numerals and index marks: black

NUMERAL SIZE ..... .075 high (1,90) x .013 width (0,33) of line

GRADUATION SIZE ..... Numeral graduations .040 long (1,02) intermediate graduation .030 long (0,76). Width of graduations .010 (0,25)

WEIGHT ..... 0.7 oz. max. (19,84 gm)

MOUNTING HARDWARE ..... Lock washer; internal tooth, steel, nickel plated
panel nut: brass, nickel plated

REFERENCE CHART FOR COMPLETE LINE OF MULTIDIALS

MODEL		11	15-1-11 / 18-1-11	15-2-11	16	21
Number of Turns		11	10	100	15	15
Minor Scale Division		1/50 turn	1/500 turn	1/500 turn	1/50 turn	1/100 turn
Shaft Bore	inches (mm)	.250 (6,35)*	.250 (6,35)*	.250 (6,35)*	.250 (6,35)*	.250 (6,35)*
Finish		Satin Chrome**	Satin Chrome	Satin Chrome	Clear Anodize	Satin Chrome**
Body Size	inches (mm)	1.000 dia. (25,40)	1.000 (25,40) 1.750 (44,45) h	1.000 (25,40) 1.750 (44,45) h	.875 dia. (22,22)	1.812 dia. (46,04)
Depth	inches (mm)	.875 (22,23)	1.000 (25,40)	1.000 (25,40)	.875 (22,22)	1.000 (25,40)
Weight	ounces (grams)	0.7 (19,84)	1.6 (45,40)	1.6 (45,40)	0.7 (19,84)	3.0 (85,05)

*Accommodations for 1/8" diameter shafts available.
**Available in black chrome and brushed chrome finishes.

ORDERING CODE (OPTIONAL FEATURES)

The part number consists of three groups of digits. The first group is the SPECTROL Model number. The second group describes the shaft diameter with which the dial is to be used. The third group describes the exterior finish, markings and other features.

11 — 1 — 11

BASIC MODEL

11

SHAFT DIAMETER ACCOMMODATION

1. 1/4" Shaft (standard)
3. 1/8" Shaft adapter*

FINISH AND OTHER FEATURES

11. Satin chrome, black markings
21. Black chrome, white markings
31. Brushed chrome, black markings

*11-3-xx is an 11-1-xx with adapter kit for ⅛" shaft device.

SPECTROL ELECTRONICS GROUP

Spectrol Reliance Ltd.
Drakes Way
Swindon, Wiltshire, England
Swindon 21351 • TELEX: 44692

Spectrol Electronics Corporation
17070 E. Gale Ave., P.O. Box 1220
City of Industry, Calif. 91749, U.S.A.
(213) 964-6565 • TWX (910) 584-1314

SP Elettronica spa
Via Carlo Pisacane 7
20016 Pero (Milan) Italy
35 30 241 • TELEX: 330091

See Page 11, headed "Warranty," the contents of which are made a part hereof and included herein by reference.

MODEL 15

- SMOOTH OPERATING MECHANISM WITH QUALITY "FEEL"
- ATTRACTIVE APPEARANCE WITH LOW PROFILE
- LARGE, HIGHLY READABLE NUMERALS
- POSITIVE BRAKING ACTION
- A HANDSOME, REMOVABLE KNOB CONCEALS SETSCREWS AND PERMITS ACCESS TO POT SHAFT AFTER MOUNTING, FOR FAST ACCURATE PHASING

ACTUAL SIZE

Model 15-1-11

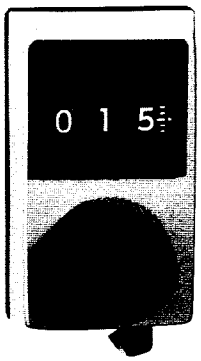

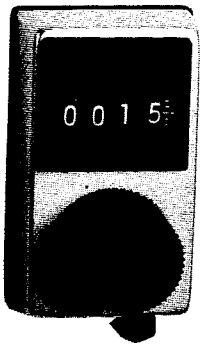

Model 15-2-11

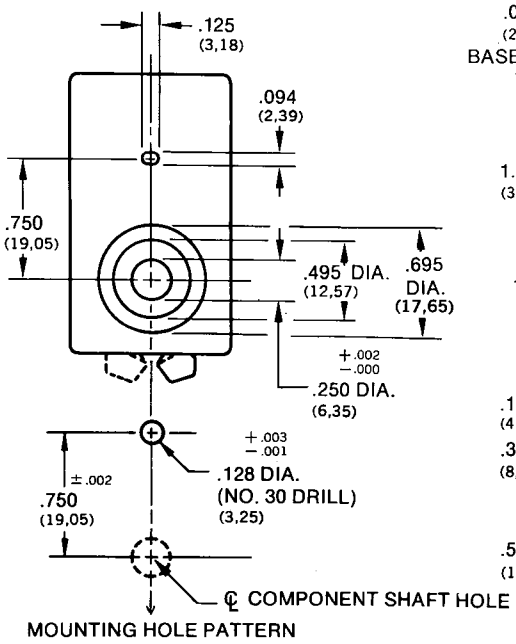

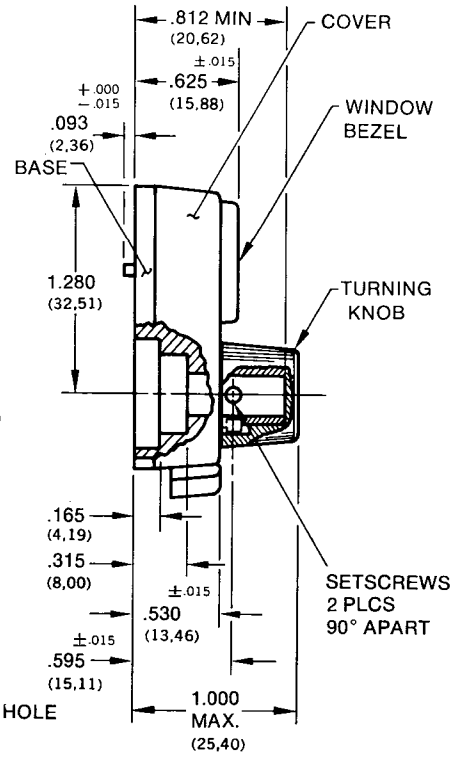

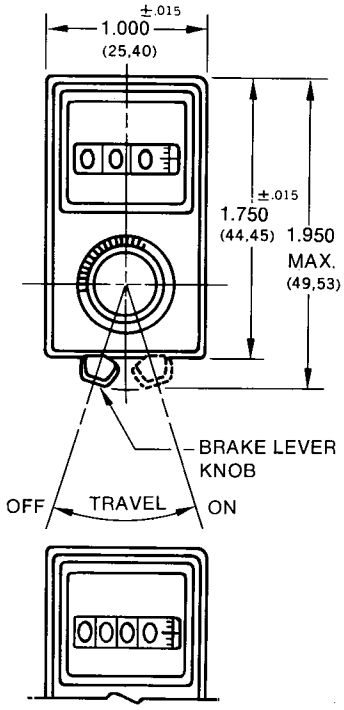

4 WHEEL VERSION

TOLERANCES: UNLESS OTHERWISE NOTED.
DECIMALS ± .005 ANGLES ±2°
BASIC DIMENSIONS ARE IN INCHES
MILLIMETER DIMENSIONS IN PARENTHESES

SPECIFICATIONS:

OPERATION ..... 3 Digit: (10 turn) The left digit indicates the number of complete revolutions of the turning knob and the right two digits indicate the percent of a revolution. The unit registers a total count of 999.
4 Digit: (100 turn) The left two digits indicate the number of complete revolutions of the turning knob and the right two digits indicate the percent of a revolution. The unit registers a total count of 9999.

ACCURACY ..... Graduation lines adjacent to the numerals on the right digit wheel indicate settings of .2% of a revolution of the turning knob.

ROTATION ..... The indication shall increase with clockwise rotation of the turning knob.

NUMERALS ..... The numerals shall be white on a black background and .130 high (3,30).

PHASING ..... The dial shall have the feature of being phased during the mounting operation by rotating the exposed component shaft to correspond with the desired reading on the dial prior to tightening the set screws.

MOUNTING ..... The spring detented knob shall be removed using a straight pull, exposing two No. 4-40 hex socket set screws for mounting the dial directly to the component shaft.

FINISH ..... Cover: Satin Metal Finish
Knobs, Bezel, & Base: Matte Black Plastic

WEIGHT ..... 1.6 ounces (45.36 Gm)

REFERENCE CHART FOR COMPLETE LINE OF MULTIDIALS

MODEL		11	15 18-1-11	15-2-11	16	21
Number of Turns		11	10	100	15	15
Minor Scale Division		1/50 turn	1/500 turn	1/500 turn	1/50 turn	1/100 turn
Shaft Bore	inches (mm)	.250 (6,35)*	.250 (6,35)*	.250 (6,35)*	.250 (6,35)*	.250 (6,35)*
Finish		Satin Chrome**	Satin Chrome	Satin Chrome	Clear Anodize	Satin Chrome**
Body Size	inches (mm)	1.000 dia. (25,40)	1.000 (25,40) 1.750 (44,45) h	1.000 (25,40) 1.750 (44,45) h	.875 dia. (22,22)	1.812 dia. (46,04)
Depth	inches (mm)	.875 (22,23)	1.000 (25,40)	1.000 (25,40)	.875 (22,22)	1.000 (25,40)
Weight	ounces (grams)	0.7 (19,84)	1.6 (45,40)	1.6 (45,40)	0.7 (19,84)	3.0 (85,05)

*Accommodations for 1/8" diameter shaft available.
**Available in black chrome and brushed chrome finishes.

MODEL 15

Removable knob exposes end of component shaft for precise phasing. Knob covers mounting setscrews to give unit smooth, unblemished appearance.

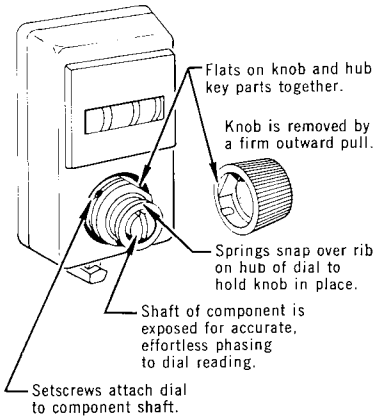

HOW TO ORDER THE MODEL 15 The Model 15 can be ordered from this specification sheet by use of the following ordering code. The part number consists of three groups of digits. The first group is the Spectrol model number. The second group describes the shaft diameter with which the dial is to be used. The third group describes the exterior finish and Bezel window.

15 — X — XX

BASE MODEL
15

SHAFT DIAMETER AND NUMERICAL DISPLAY
1. ¼ Dia. 3 Digit
2. ¼ Dia. 4 Digit
3. ⅛ Dia. 3 Digit
4. ⅛ Dia. 4 Digit

BEZEL
1. Open
3. Clear Plastic Window

FINISH
1. Satin Clear Anodize
3. Black Anodize White Bezel Trim
5. Black Anodize

SPECTROL ELECTRONICS GROUP

Spectrol Reliance Ltd.
Drakes Way
Swindon, Wiltshire, England
Swindon 21351 • TELEX: 44692

Spectrol Electronics Corporation
17070 E. Gale Ave., P.O. Box 1220
City of Industry, Calif. 91749, U.S.A.
(213) 964-6565 • TWX (910) 584-1314

SP Elettronica spa
Via Carlo Pisacane 7
20016 Pero (Milan) Italy
35 30 241 • TELEX: 330091

See Page 11, headed "Warranty," the contents of which are made a part hereof and included herein by reference.

MODEL 16

▪ LOW COST ▪ LARGE, EASY TO READ NUMERALS ▪ FIRM POSITIVE BRAKING ACTION

▪ BRAKE LEVER ADJUSTMENT FOR HIGHER TORQUE ▪ ZERO BACKLASH MOUNTING

▪ PRECISION MECHANISM WITH QUALITY FEEL ▪ ATTRACTIVE INDUSTRY ACCEPTED APPEARANCE

ACTUAL SIZE

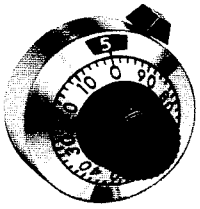

MODEL 16
7/8 Inch Diameter

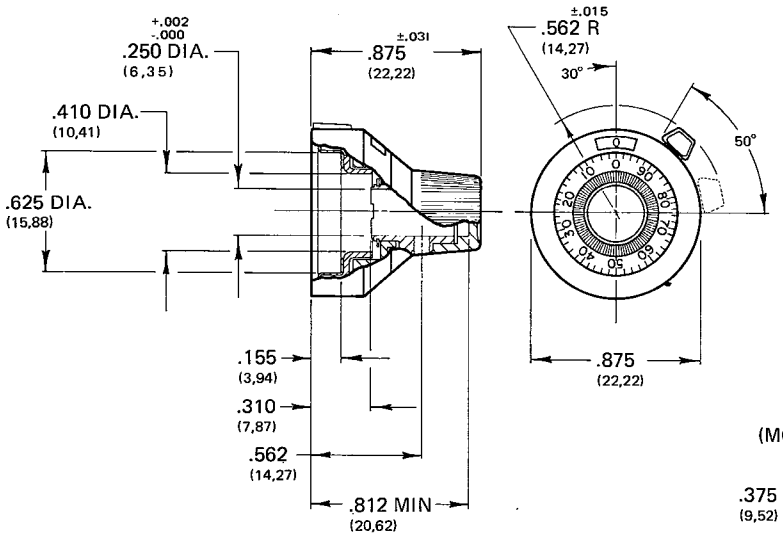

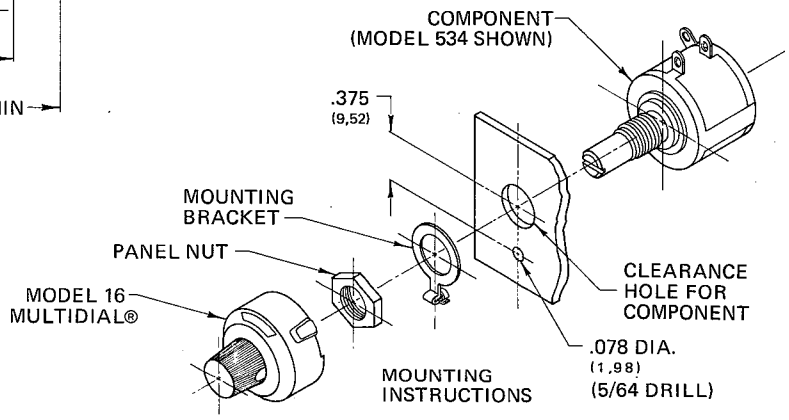

TOLERANCES: UNLESS OTHERWISE NOTED.
DECIMALS ± .005 ANGLES ±2°
BASIC DIMENSIONS ARE IN INCHES
MILLIMETER DIMENSIONS IN PARENTHESES

SPECIFICATIONS

READOUT AND OPERATION ..... Unit shall register a total count of 15 turns
The number in the window (0 thru 14) indicates completed number of turns of the drive sleeve.
Graduated circular dial indicates the percent of a partial turn of the drive sleeve

TRANSFER POINT ..... The number in center of window shall change as graduated dial rotates between 94 and 0.

ROTATION ..... Readout shall increase with clockwise and decrease with counterclockwise rotation.

BRAKE LEVER OPERATION: ..... 1st Postion (15° movement of Brake Lever) operates a high torque system for fine adjustment; 2nd Position (15° additional movement of Brake Lever) actuates brake.

ACCURACY ..... Backlash shall be zero between graduated dial and drive sleeve.

MOUNTING ..... Install mounting bracket between panel and panel nut. Multidial shall mount directly to shaft with No. 2-56 spline socket set screw, located adjacent to No. 50 on graduated dial.

NUMERAL SIZE ..... 0.075 high

GRADUATION SIZE ..... Numeral graduations .045 long (1,14) intermediate graduations .030 long (0,76)

FINISH ..... Exposed metal parts: Brushed metal finish
Turning knob and brake lever knob: Black plastic
Numerals: Graduated Dial—Black
Turns Counter — White on Black Background.

WEIGHT ..... 0.7 oz. max. (19,84 gm)

REFERENCE CHART FOR COMPLETE LINE OF MULTIDIALS

MODEL		11	15-1-11 / 18-1-11	15-2-11	16	21
Number of Turns		11	10	100	15	15
Minor Scale Division		1/50 turn	1/500 turn	1/500 turn	1/50 turn	1/100 turn
Shaft Bore	inches (mm)	.250 (6,35)*	.250 (6,35)*	.250 (6,35)*	.250 (6,35)*	.250 (6,35)*
Finish		Satin Chrome**	Satin Chrome	Satin Chrome	Clear Anodize	Satin Chrome**
Body Size	inches (mm)	1.000 dia. (25,40)	1.000 (25,40) 1.750 (44,45) h	1.000 (25,40) 1.750 (44,45) h	.875 dia. (22,22)	1.812 dia. (46,04)
Depth	inches (mm)	.875 (22,23)	1.000 (25,40)	1.000 (25,40)	.875 (22,22)	1.000 (25,40)
Weight	ounces (grams)	0.7 (19,84)	1.6 (45,40)	1.6 (45,40)	0.7 (19,84)	3.0 (85,05)

*Accommodations for 1/8" diameter shaft available.
**Available in black chrome and brushed chrome finishes.

HOW TO ORDER THE MODEL 16

The Model 16 can be ordered from this specification sheet by use of the following ordering code. The part number consists of three groups of digits. The first group is the Spectrol model number. The second group describes the shaft diameter with which the dial is to be used. The third group describes the exterior finish.

16 — X — XX

BASIC MODEL
16

SHAFT ACCOMMODATIONS
1. ¼" Dia. Shaft — 1 Set Screw
2. ¼" Dia. Shaft — 2 Set Screws
3. ⅛" Dia. Shaft — 1 Set Screw
4. ⅛" Dia. Shaft — 2 Set Screws

FINISH
11. Standard
21. Black Anodize
31. Same as 16 - 1 - 11 Except: Knobs, gray; Turns Counter, gray with black numbers.

SPECTROL ELECTRONICS GROUP

Spectrol Reliance Ltd.
Drakes Way
Swindon, Wiltshire, England
Swindon 21351 • TELEX: 44692

Spectrol Electronics Corporation
17070 E. Gale Ave., P.O. Box 1220
City of Industry, Calif. 91749, U.S.A.
(213) 964-6565 • TWX (910) 584-1314

SP Elettronica spa
Via Carlo Pisacane 7
20016 Pero (Milan) Italy
35 30 241 • TELEX: 330091

See Page 11, headed "Warranty," the contents of which are made a part hereof and included herein by reference.

MODEL 18

- SMOOTH OPERATING MECHANISM WITH QUALITY "FEEL"
- ATTRACTIVE APPEARANCE WITH LOW PROFILE
- LARGE, HIGHLY READABLE NUMERALS ■ POSITIVE BRAKING ACTION
- A HANDSOME, REMOVABLE KNOB CONCEALS SETSCREWS AND PERMITS ACCESS TO POT SHAFT AFTER MOUNTING, FOR FAST ACCURATE PHASING

ACTUAL SIZE

Model 18-1-11

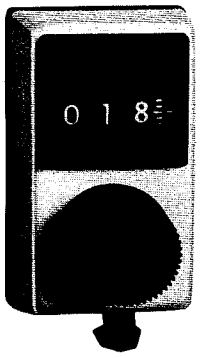

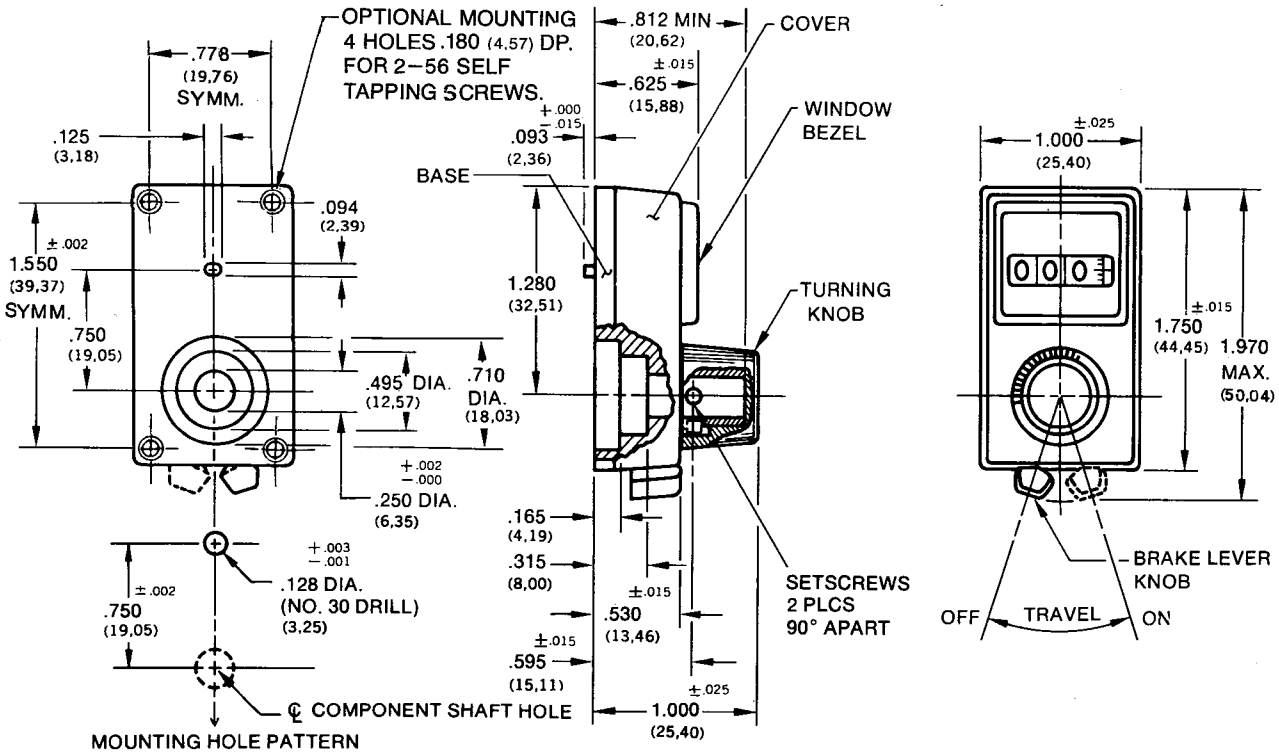

TOLERANCES: UNLESS OTHERWISE NOTED.
DECIMALS ± .005 ANGLES ±2°
BASIC DIMENSIONS ARE IN INCHES
MILLIMETER DIMENSIONS IN PARENTHESES

SPECIFICATIONS:

OPERATION ..... The left digit indicates the number of complete revolutions of the turning knob and the right two digits indicate the percent of a revolution. The unit registers a total count of 999.

ACCURACY ..... Graduation lines adjacent to the numerals on the right digit wheel indicate settings of .2% of a revolution of the turning knob.

ROTATION ..... The indication shall increase with clockwise rotation of the turning knob.

NUMERALS ..... The numerals shall be white on a black background and .120 high (3,05).

PHASING ..... The dial shall have the feature of being phased during the mounting operation by rotating the exposed component shaft to correspond with the desired reading on the dial prior to tightening the set screws.

MOUNTING ..... The spring detented knob shall be removed using a straight pull, exposing two No. 4-40 hex socket set screws for mounting the dial directly to the component shaft.

FINISH ..... Cover: Satin Metal Finish
Knobs, Bezel, & Base: Matte Black Plastic

WEIGHT ..... 1.0 ounce (28,35 gm)

REFERENCE CHART FOR COMPLETE LINE OF MULTIDIALS

MODEL		11	15 18-1-11	15-2-11	16	21
Number of Turns		11	10	100	15	15
Minor Scale Division		1/50 turn	1/500 turn	1/500 turn	1/50 turn	1/100 turn
Shaft Bore	inches (mm)	.250 (6,35)*	.250 (6,35)*	.250 (6,35)*	.250 (6,35)*	.250 (6,35)*
Finish		Satin Chrome**	Satin Chrome	Satin Chrome	Clear Anodize	Satin Chrome**
Body Size	inches (mm)	1.000 dia. (25,40)	1.000 (25,40) 1.750 (44,45) h	1.000 (25,40) 1.750 (44,45) h	.875 dia. (22,22)	1.812 dia. (46,04)
Depth	inches (mm)	.875 (22,23)	1.000 (25,40)	1.000 (25,40)	.875 (22,22)	1.000 (25,40)
Weight	ounces (grams)	0.7 (19,84)	1.6 (45,40)	1.6 (45,40)	0.7 (19,84)	3.0 (85,05)

*Accommodations for 1/8" diameter shaft available.
**Available in black chrome and brushed chrome finishes.

Model 18

Removable knob exposes end of component shaft for precise phasing. Knob covers mounting setscrews to give unit smooth, unblemished appearance.

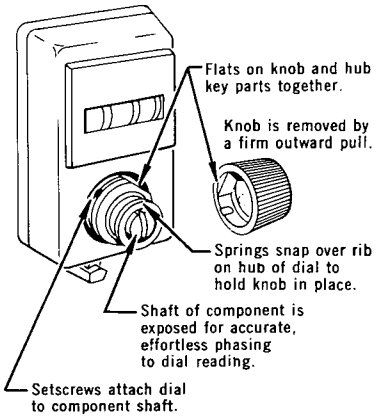

HOW TO ORDER THE MODEL 18 The Model 18 can be ordered from this specification sheet by use of the following ordering code. The part number consists of three groups of digits. The first group is the Spectrol model number. The second group describes the shaft diameter with which the dial is to be used. The third group describes the exterior finish and Bezel window.

18 — X — XX

BASE MODEL	SHAFT DIAMETER AND NUMERICAL DISPLAY	BEZEL	FINISH
18	1. ¼ Dia. 3 Digit 3. ⅛ Dia. 3 Digit	1. Open 3. Clear Plastic Window	1. Satin Clear Anodize 3. Black Anodize

SPECTROL ELECTRONICS GROUP

Spectrol

Spectrol Reliance Ltd.
Drakes Way
Swindon, Wiltshire, England
Swindon 21351 • TELEX: 44692

Spectrol Electronics Corporation
17070 E. Gale Ave., P.O. Box 1220
City of Industry, Calif. 91749, U.S.A.
(213) 964-6565 • TWX (910) 584-1314

SP Elettronica spa
Via Carlo Pisacane 7
20016 Pero (Milan) Italy
35 30 241 • TELEX: 330091

MODEL 21

ACTUAL SIZE

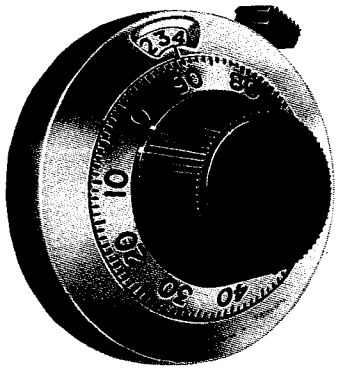

Model 21

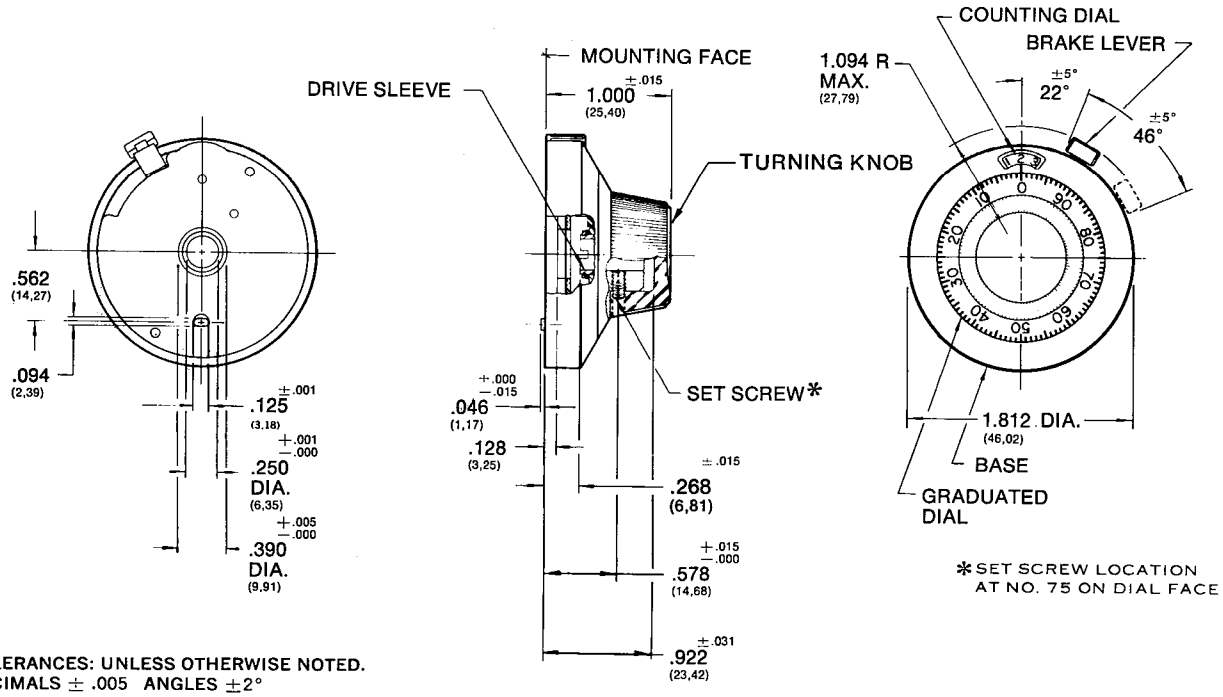

*SET SCREW LOCATION AT NO. 75 ON DIAL FACE

TOLERANCES: UNLESS OTHERWISE NOTED.
DECIMALS ± .005 ANGLES ±2°
BASIC DIMENSIONS ARE IN INCHES
MILLIMETER DIMENSIONS IN PARENTHESES

SPECIFICATIONS:

READOUT AND OPERATION ..... Unit shall register a total count of 1499
The number in center of window (0 thru 14) indicates completed number of turns of the drive sleeve
The graduated circular dial indicates the percent of a partial turn of the drive sleeve

TRANSFER POINT ..... The number in center of window shall change as graduated dial rotates between 94 and 0

ROTATION ..... Readout shall increase with clockwise and decrease with counterclockwise rotation

ACCURACY ..... Backlash shall be zero between graduated dial and drive sleeve

MOUNTING ..... Unit shall mount directly to shaft with no. 4-40 hex socket set screw located adjacent to no. 75 on graduated dial

NUMERAL SIZE ..... Counter wheel:
.090 high x .013 (2,29 x 0,33)
Graduated dial:
.109 high x .018 (2,77 x 0,46)

GRADUATION SIZE .... Numeral and every fifth graduation .055 (1,40) long, intermediate graduations .035 long (0,89)
Width of graduation .012 (0,30)

FINISH ..... Base and graduated dial:
Satin or machined bright chrome plated
Turning knob and brake lever knob:
Black plastic
Numerals and index marks: Black

WEIGHT ..... 3.0 oz. max. (85,05 gm)

REFERENCE CHART FOR COMPLETE LINE OF MULTIDIALS

MODEL		11	15 18-1-11	15-2-11	16	21
Number of Turns		11	10	100	15	15
Minor Scale Division		1/50 turn	1/500 turn	1/500 turn	1/50 turn	1/100 turn
Shaft Bore	inches (mm)	.250 (6,35)*	.250 (6,35)*	.250 (6,35)*	.250 (6,35)*	.250 (6,35)*
Finish		Satin Chrome**	Satin Chrome	Satin Chrome	Clear Anodize	Satin Chrome**
Body Size	inches (mm)	1.000 dia. (25,40)	1.000 (25,40) 1.750 (44,45) h	1.000 (25,40) 1.750 (44,45) h	.875 dia. (22,22)	1.812 dia. (46,04)
Depth	inches (mm)	.875 (22,23)	1.000 (25,40)	1.000 (25,40)	.875 (22,22)	1.000 (25,40)
Weight	ounces (grams)	0.7 (19,84)	1.6 (45,40)	1.6 (45,40)	0.7 (19,84)	3.0 (85,05)

*Accommodations for 1/8" diameter shafts available.
**Available in black chrome and brushed chrome finishes.

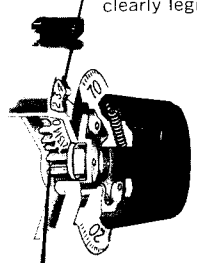

ORDERING CODE (OPTIONAL FEATURES)

The part number consists of three groups of digits. The first group is the SPECTROL Model number. The second group describes the shaft diameter with which the dial is to be used. The third group describes the exterior finish, markings and other features.

21 — 1 — 11

BASIC MODEL	SHAFT DIAMETER ACCOMMODATION	FINISH AND OTHER FEATURES
21	1. 1/4" Shaft (standard)	11. Satin chrome, black markings
	3. 1/8" Shaft adapter*	21. Black chrome, white markings
		31. Brushed chrome, black markings

*21-3-xx is an 21-1-xx with adapter for 1/8" shaft device.

SPECTROL ELECTRONICS GROUP

Spectrol Reliance Ltd.
Drakes Way
Swindon, Wiltshire, England
Swindon 21351 • TELEX: 44692

Spectrol Electronics Corporation
17070 E. Gale Ave., P.O. Box 1220
City of Industry, Calif. 91749, U.S.A.
(213) 964-6565 • TWX (910) 584-1314

SP Elettronica spa
Via Carlo Pisacane 7
20016 Pero (Milan) Italy
35 30 241 • TELEX: 330091

See Page 11, headed "Warranty," the contents of which are made a part hereof and included herein by reference.

Corporate Strength

In 1954, Spectrol was a small company founded on a simple concept—to design and produce precision potentiometers to the highest possible standards and with unparalleled pride of craftsmanship. Today, with five plants located around the world, the Spectrol Electronics Group is one of the world's largest producers of precision potentiometers, trimming potentiometers, turns-counting dials, and miniature rotary switches.

Our parent company, Carrier Corporation, is a wholly owned subsidiary of United Technologies Corporation. The UTC slogan "Fulfilling the Promise of Technology" is particularly appropriate because it states in one quick phrase the philosophy under which we at Spectrol have operated since our inception.

Continued growth with stability is the UTC plan for the future, and that fits in quite nicely with our long-standing Spectrol objectives. For our present distributors, and for those who are about to become distributors, the message is clear: Spectrol has the total capability to develop, produce, and deliver the products necessary to help the Spectrol distributor meet the growing demands of his marketplace.

Spectrol Electronics Group

Spectrol Electronics Group Headquarters,
at Spectrol Electronics Corporation plant, City of Industry, California.

Spectrol Electronic Controls, California

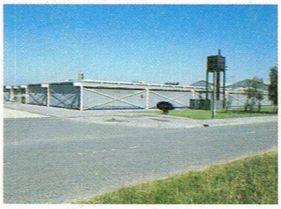

Spectrol Reliance Limited, England

S.P. Electronica, Italy

Spectrol Caribe Corporation, Puerto Rico

Spectrol

SPECTROL ELECTRONICS GROUP

UNITED STATES · Spectrol Electronics Corporation P.O. Box 1220, City of Industry, Calif., 91749, U.S.A. · (213) 964-6565 · TWX (910) 584-1314
UNITED KINGDOM · Spectrol Reliance Ltd. Drakes Way, Swindon, Wiltshire, England · Swindon 21351 · TELEX: 44692
ITALY · SP Elettronica SpA Via Carlo Pisacane 7, 20016 Pero (Milan) Italy · (02) 35 30 241 · TELEX: 330091
GERMANY · Sales Office, Spectrol Electronics GmbH Oberauerstrasse 15, 8000 Munich 70 West Germany (089) 7145096 · TELEX: 05-213014
PUERTO RICO · Spectrol Caribe Corporation Las Marias Industrial Park, Añasco, Puerto Rico · (809) 826-3012 · TELEX: SCC PR 3452012

4/81 – 50M Printed in U.S.A.