HS Aluminium Housed Resistors

Manufactured in line with the requirements of MIL 18546 and IEC 115, designed for direct heatsink mounting with thermal compound to achieve maximum performance.



- High Power to volume
- Wound to maximise High Pulse Capability
- Values from R005 to 100K
- Custom designs welcome
- RoHS Compliant

Characteristics

Tolerance (Code):	Standard ±5% (J) and ±10% (K). Also available ±1% (F), ±2% (G) and ±3% (H)
Tolerance for low Ω values:	Typically ≥ R05 ±5% ≤ R047 ±10%
Temperature coefficients:	Typical values < 1K 100ppm Std. > 1K 25ppm Std. For lower TCR's please contact Arcol
Insulation resistance (Dry):	10,000 MΩ minimum
Power dissipation:	At high ambient temperature dissipation derates linearly to zero at 200°C
Ohmic values:	From R005 to 100K depending on wattage size
Low inductive (NHS):	Specify by adding N before HS Series code, e.g. NHS50
NHS ohmic value:	Divide standard HS maximum value by 4
NHS working volts:	Divide standard HS maximum working voltage by 1.414

Temp. Rise & Power Dissipation

Surface temperature of resistor related to power dissipation. The resistor is standard heatsink mounted using a proprietary heatsink compound.

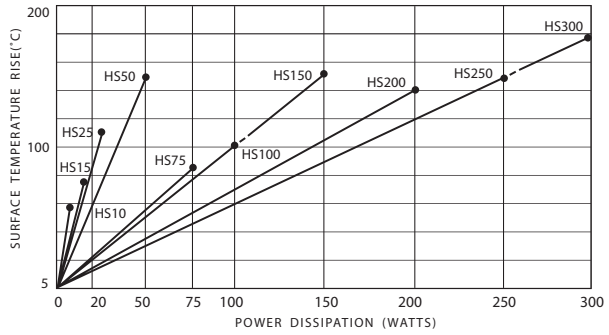

Heat Dissipation

Heat dissipation: Whilst the use of proprietary heat sinks with lower thermal resistances is acceptable, uprating is not recommended. For maximum heat transfer it is recommended that a heat sink compound be applied between the resistor base and heat sink chassis mounting surface. It is essential that the maximum hot spot temperature of 200°C is not exceeded, therefore, the resistor must be mounted on a heat sink of correct thermal resistance for the power being dissipated.

Ordering Procedure

Standard Resistor. To specify standard: Series, Watts, Ohmic Value, Tolerance Code, e.g.: HS25 2R2 J
Non Inductive Resistor. To specify add N, e.g.: NHS100 10R J

ARCOL UK Limited,
Threemilestone Ind. Estate,
Truro, Cornwall, TR4 9LG, UK.
T +44 (0) 1872 277431
F +44 (0) 1872 222002
E sales@arcolresistors.com

The information contained herein does not form part of a contract and is subject to change without notice. ARCOL operate a policy of continual product development, therefore, specifications may change.

It is the responsibility of the customer to ensure that the component selected from our range is suitable for the intended application. If in doubt please ask ARCOL.

For more information and ordering, please consult
www.arcolresistors.com

12/14.08

HS Aluminium Housed Resistors

Electrical Specifications

Size	Style MIL-R 18546	Power rating on std. heatsink @25°C	Watts with no heatsink @25°C	Resis-tance range	Limiting element voltage	Voltage proof AC Peak	Voltage proof AC rms.	Approx weight gms	Typical surface rise HS mounted	Standard heatsink	
										cm^2	Thickness mm
HS10	RE 60	10	5	R005-10K	160	1400	1000	4	5.8	415	1
HS15	RE 65	15	7	R005-10K	265	1400	1000	7	5.1	415	1
HS25	RE 70	25	9	R005-36K	550	3500	2500	14	4.2	535	1
HS50	RE 75	50	14	R01-86K	1250	3500	2500	32	3.0	535	1
HS75		75	24	R01-50K	1400	6363	4500	85	1.1	995	3
HS100		100	30	R01-70K	1900	6363	4500	115	1.0	995	3
HS150		150	45	R01-100K	2500	6363	4500	175	1.0	995	3
HS200		200	50	R01-50K	1900	7070	5000	475	0.7	3750	3
HS250		250	55	R01-50K	2200	7070	5000	600	0.6	4765	3
HS300		300	60	R01-68K	2500	7070	5000	700	0.6	5780	3

HS10-HS300 Standard Resistor

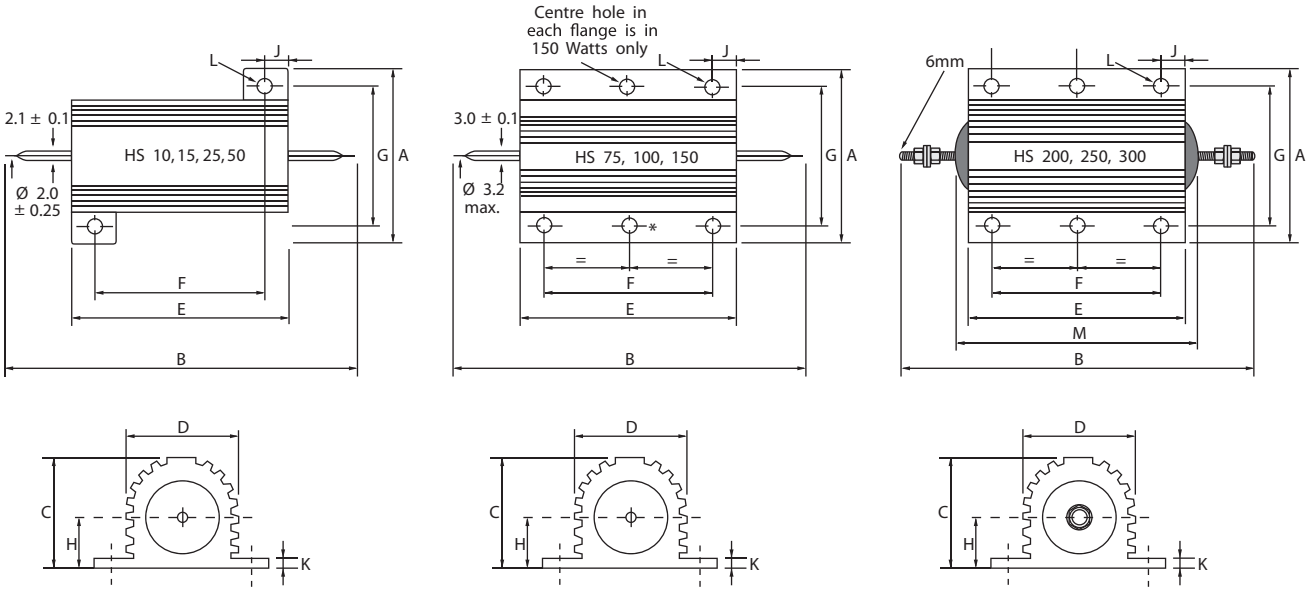

Dimensions (mm)

Size	A Max	B Max	C Max	D Max	E Max	F±0.3	G±0.3	H Max	J Max	K Max	L ±0.25*	M Max
HS10	16.5	30.0	8.8	8.5	15.9	11.3	12.4	4.5	2.4	1.8	2.4	
HS15	21.0	36.5	11.0	11.2	19.9	14.3	15.9	5.5	2.8	1.8	2.4	
HS25	28.0	51.0	14.8	14.2	27.3	18.3	19.8	7.7	5.2	2.6	3.2	
HS50	28.0	72.5	14.8	14.2	49.1	39.7	21.4	8.4	5.2	2.6	3.2	
HS75	47.5	72.0	24.1	27.3	48.7	29.0	37.0	11.8	10.4	3.7	4.4	
HS100	47.5	88.0	24.1	27.3	65.2	35.0	37.0	11.8	15.4	3.7	4.4	
HS150	47.5	121.0	24.1	27.3	97.7	58.0	37.0	11.8	20.4	3.7	4.4	
HS200	72.5	145.7	41.8	45.5	89.7	70.0	57.2	20.5	10.4	5.5	5.1	103.4
HS250	72.5	167.0	41.8	45.5	109.7	89.0	57.2	20.5	10.4	5.5	5.1	122.4
HS300	72.5	184.4	41.8	45.5	127.7	104.0	59.0	20.5	12.4	5.5	6.6	141.4
* HS200-HS300 Watts is ± 0.45												