ultrium tape drive user's guide

index

contents of this section

a b c d e f g h i j l m n o p r s t u v w

a

accessories, ordering *See* Ordering Information

addresses, customer support *See* Obtaining Service

AIX (IBM UNIX) *See* IBM AIX 3.2.5+

altitude, operating limits *Choose your drive model from* Features and Specifications

amber light *See* Interpreting the Front Panel Lights

anti-static protection *See* Installation Guide

applications, backup *See* Backup Software Requirements

archive life *See* Caring for Cartridges

Asia Pacific support numbers *See* Technical Support for Asia Pacific

AT&T mode *See* UNIX Glossary

b

backup applications *See* Backup Software Requirements

backup driver software *See* Backup Software Requirements

backup failure *See* You Cannot Back Up or Restore

backup software *See* Backup Software Requirements

compatibility with TapeAlert *See* Backup Software Requirements
problems with *See* You Cannot Back Up or Restore

Berkeley mode *See* UNIX Glossary

boot-up fails *See* Computer Does Not Boot Up

c

cables available *See* Ordering Information

cable supplied with drive *See* Installation Guide

capacity, tape *See* Choosing Cartridges

care of cartridges *See* Caring for Cartridges

cartridges

archive life *See* Caring for Cartridges
available from HP *See* Ordering Information
care of *See* Caring for Cartridges
choosing *See* Choosing Cartridges
excessive errors *See* Cleaning the Tape Heads
labels *See* labels, cartridge
life *See* Caring for Cartridges
loading cartridges in a drive *See* Loading a Cartridge
ordering *See* Ordering Information
storing *See* Caring for Cartridges
tape life *See* Caring for Cartridges
times used *See* Caring for Cartridges
unloading *See* Unloading a Cartridge
write-protecting *See* Write-Protecting Cartridges

certifications *Choose your drive model from* Features and Specifications

changing SCSI ID *See* Installation Guide

Clean light *See* Interpreting the Front Panel Lights

cleaning cartridges

about *See* Cleaning the Tape Heads
ordering *See* Ordering Information

cleaning tape heads *See* Cleaning the Tape Heads

compression

available on HP tape drives *Choose your drive model from* Features and Specifications
definition *See* UNIX Glossary

computer problems *See* Problems with Your Computer

condensation *See* Caring for Cartridges

contacting HP *See* Obtaining Service

customer support *See* Customer Support

d

data cartridges

about *See* Choosing Cartridges
ordering *See* Ordering Information

data compression *Choose your drive model from* Features and Specifications

DEC UNIX systems *See* UNIX Configuration Guide: DEC Systems

default SCSI ID *See* Installation Guide

device filenames

HP-UX *See* HP-UX Systems
IBM AIX *See* IBM AIX 3.2.5+
PC UNIX *See* PC-Based UNIX (SCO)

diagnosing problems *See* Troubleshooting or Diagnostics

Digital UNIX 4.x *See* UNIX Configuration Guide: DEC Systems

drive

cannot back up or restore *See* You Cannot Back Up or Restore
designations *Choose your drive model from* Features and Specifications
does not power up *See* Tape Drive Does Not Power Up
features *Choose your drive model from* Features and Specifications
internal identification number *Choose your drive model from* Features and Specifications
lights *See* Interpreting the Front Panel Lights
maintenance *See* Cleaning the Tape Heads
models *Choose your drive model from* Features and Specifications
power requirements *Choose your drive model from* Features and Specifications
returning for service *See* Returning your HP SureStore Tape Drive
specifications *Choose your drive model from* Features and Specifications
switching on *See* Switching on the Drive
use instructions *See* Using Your Tape Drive
warranty *See* Warranty

driver software

available online *See* Worldwide Online Services
missing *See* You Cannot Back Up or Restore
on this CD-ROM *See* Installation Guide or README file

e

ejecting a cartridge *See* Loading and Unloading a Cartridge

electrical requirements *Choose your drive model from* Features and Specifications

electromagnetic specifications *Choose your drive model from* Features and Specifications

electrostatic discharge, protection against *See* Installation Guide

EMC certifications *Choose your drive model from* Features and Specifications or see the back of your Installation Guide

environmental specifications *Choose your drive model from* Features and Specifications

equipment supplied with drive *See* Installation Guide

error condition signal

tape drive *See* Front Panel Lights
cartridge *See* Front Panel Lights

European support numbers *See* Technical Support for Europe

expired cleaning cartridges *See* Cleaning the Tape Heads

Express Exchange warranty *See* Warranty or Returning Your HP SureStore Tape Drive

f

fast, wide SCSI *See* Narrow and Wide, Fast and Ultra SCSI

fault condition *See* Troubleshooting Tips

features of DAT drives *Choose your drive model from* Features and Specifications

filemarks *See* UNIX Glossary

firmware upgrades *See* HP Library & Tape Tools

flashing light *See* Interpreting the Front Panel Lights

Form, Customer Service *See* Customer Service Form

formats, tape *See* Choosing Cartridges

frequency of cleaning *See* Cleaning the Tape Heads

frequently asked questions *See* Frequently Asked Questions

front panel *See* Interpreting the Front Panel Lights

FTP site *See* Worldwide Online Services

g

green light *See* Interpreting the Front Panel Lights

h

hang during boot-up *See* Computer Does Not Boot

head cleaner, automatic *See* Cleaning the Tape Heads

head cleaning *See* Cleaning the Tape Heads

high error rate *See* Cleaning the Tape Heads

host adapter, SCSI *See* Checking Installation Prerequisites

HP part numbers *See* Ordering Information

HP service agreements *See* Service Agreements

HP-UX *See* HP-UX Systems

humidity specifications *Choose your drive model from* Features and Specifications

i

IBM AIX *See* IBM AIX 3.2.5+

immediate mode *See* UNIX Glossary

infinite flush *See* UNIX Glossary

inserting a cartridge *See* Loading a Cartridge

installation prerequisites *See* Checking Installation Prerequisites

installing your drive *See* Installation Guide

Internet sites *See* Worldwide Online Services

IRIX *See* Silicon Graphics IRIX

j

jammed cartridges *See* Jammed Cartridge

jumpers, SCSI ID *See* Installation Guide

l

labels, cartridge

backup tapes *See* Labeling Cartridges
one label only *See* Caring for Cartridges

LEDs *See* Interpreting the Front Panel Lights

life of LTO Ultrium tape *See* Caring for Cartridges

lights *See* Interpreting the Front Panel Lights

loading cartridges *See* Loading a Cartridge

loose connections *See* Tape Drive Does Not Power Up and You Cannot Back Up or Restore

LUN (logical unit number) *See* UNIX Glossary

m

maintenance *See* Cleaning the Tape Heads

measurements *Choose your drive model from* Features and Specifications

media available *See* Ordering Information

messages

TapeAlert monitoring utility *See* TapeAlert

model numbers *Choose your drive model from* Features and Specifications

models, DAT drive *Choose your drive model from* Features and Specifications

monitoring utility *See* TapeAlert

mounting rails *See* rail kits

n

narrow SCSI *See* Narrow and Wide, Fast and Ultra SCSI

non-operating limits *Choose your drive model from* Features and Specifications

non-warranty service *See* Obtaining Service

North American support numbers *See* Technical Support for North and South America

o

one-button disaster recovery *See* HP One-Button Disaster Recovery

online services *See* Worldwide Online Services

on-off switch *See* Switching on the Drive

operating instructions *See* Using Your Tape Drive

operating limits *Choose your drive model from* Features and Specifications

ordering parts and accessories *See* Ordering Information

out-of-warranty service *See* Obtaining Service

overwrite protection *See* Write-Protecting Cartridges

p

part numbers *See* Ordering Information

PC-based UNIX *See* PC-Based UNIX (SCO and Linux)

performance specifications *Choose your drive model from* Features and Specifications

phone numbers *See* Obtaining Technical Support

physical specifications *Choose your drive model from* Features and Specifications

power requirements *Choose your drive model from* Features and Specifications

power switch *See* Switching on the Drive

powering up drive *See* Switching on the Drive

power-up failure *See* Tape Drive Does Not Power Up

prerequisites for installation *See* Checking Installation Prerequisites

problems

diagnosing *See* Troubleshooting Tips
dirty tape heads *See* Cleaning the Tape Heads
during self-test *See* If There Are Problems During the Self-Test
error condition signal *See* Interpreting the LEDs
flashing lights *See* Interpreting the LEDs
frequently asked questions *See* Frequently Asked Questions
with computer *See* Problems with Your Computer
with tape drive *See* Problems with Your Tape Drive

product numbers *See* Ordering Information or Identifying which HP SureStore Ultrium Product You Have

protection from overwriting *See* Write-Protecting Cartridges

putting in a cartridge *See* Loading a Cartridge

r

radio interference certifications *Choose your drive model from* Features and Specifications or see the "Regulatory Information" booklet.

rail kits available *See* Ordering Information

regulatory information *Choose your drive model from* Features and Specifications or see the "Regulatory Information".

removing a cartridge *See* Unloading a Cartridge

removable drives

about *See* Replacing a Removable Drive
removing *See* Replacing a Removable Drive
replacing *See* Replacing a Removable Drive

repairs *See* Returning your HP SureStore Tape Drive for Service

requirements for installation *See* Checking Installation Prerequisites

reset button *See* Operating the Tape Drive

restore, failure *See* You Cannot Back Up or Restore

returning a drive for service *See* Returning your HP SureStore Tape Drive

s

safety certifications *Choose your drive model from* Features and Specifications or see the "Regulatory Information"

SCO UNIX *See* PC-Based UNIX (SCO)

SCSI

about *See* What Is SCSI?
accessories available *See* Ordering Information
bus configuration *See* Setting Up the SCSI Bus
cables *See* Ordering Information or SCSI Cables
checking configuration *See* HP Library & Tape Tools
connection loose *See* Tape Drive Does Not Power Up and You Cannot Back Up or Restore
driver software *See* You Cannot Back Up or Restore
LVD devices *See* Ultra2 and SE SCSI
narrow SCSI *See* Narrow and Wide, Fast and Ultra SCSI
planning the bus *See* Setting Up the SCSI Bus
plug-and-play adapter cards *See* Plug-and-Play Adapter Cards
SE devices *See* Ultra2 and SE SCSI
termination *See* SCSI Termination
ultra SCSI *See* Narrow and Wide, Fast and Ultra SCSI
wide SCSI *See* Narrow and Wide, Fast and Ultra SCSI

SCSI IDs

about *See* SCSI ID Numbers
changing *See* Installation Guide for your model
conflicting *See* You Cannot Back Up or Restore
default *See* Installation Guide for your model
identify existing *See* Identifying SCSI ID Numbers
planning *See* Setting Up the SCSI Bus

self-test, drive

after installation *See* Switching on the Drive
error condition *See* Interpreting LEDs
problems during *See* If There Are Problems During the Self-Test

service *See* Obtaining Service

service agreements *See* Service Agreements

setting SCSI ID *See* Installation Guide

shelf life, cartridge *See* Caring for Cartridges

shipping safely *See* Returning your HP SureStore Tape Drive

shock survival *Choose your drive model from* Features and Specifications

Silicon Graphics IRIX *See* Silicon Graphics IRIX

size of drive *Choose your drive model from* Features and Specifications

software, backup *See* Backup Software Requirements

Solaris (Sun) *See* Sun Systems

specifications *Choose your drive model from* Features and Specifications

stabilizing temperature *See* Caring for Cartridges

storing cartridges *See* Caring for Cartridges

Sun UNIX systems *See* Sun Systems

supplies *See* Ordering Information

support telephone numbers *See* Obtaining Technical Support

switching on drive *See* Switching on the Drive

t

Tape Activity light *See* Interpreting the LEDs

tape cartridges

about *See* Choosing Cartridges
ordering *See* Ordering Information

tape format *See* Choosing Cartridges

tape heads, cleaning *See* Cleaning the Tape Heads

Tape light *See* Interpreting the Front Panel Lights

TapeAlert *See* TapeAlert

tapes *See* cartridges

technical support *See* Technical Support

telephone numbers *See* Obtaining Technical Support

temperature limits *Choose your drive model from* Features and Specifications

temperature, stabilizing *See* Caring for Cartridges

termination

problems with *See* Problems with Your Tape Drive
SCSI bus *See* SCSI Termination

testing your drive *See* HP Library & Tape Tools

transfer rate *Choose your drive model from* Features and Specifications

troubleshooting *See* Troubleshooting Tips

turning on drive *See* Switching on the Drive

u

ultra SCSI *See* Narrow and Wide, Fast and Ultra SCSI

UNIX systems

about *See* UNIX Configuration Guide
DEC *See* DEC Systems
Glossary *See* UNIX Glossary
HP-UX *See* HP-UX Systems
IBM AIX *See* IBM AIX 3.2.5+
Linux UNIX *See* PC-Based UNIX (Linux)
PC UNIX *See* PC-Based UNIX (Linux and SCO)
SCO UNIX *See* PC-Based UNIX (SCO)
Silicon Graphics *See* Silicon Graphics IRIX
Sun *See* Sun Systems

Unload button *See* Unloading a Cartridge

unloading a cartridge *See* Unloading a Cartridge

upgrading firmware *See* HP Library & Tape Tools

URL *See* Worldwide Online Services

US support numbers *See* Technical Support for North and South America

using the drive *See* Using Your Tape Drive

v

verifying installation

Microsoft Windows systems *See* HP Library & Tape Tools
Novell NetWare systems *See* HP Library & Tape Tools
UNIX systems *See* Verifying the Installation

vibration limits *Choose your drive model from* Features and Specifications

voltage requirements *Choose your drive model from* Features and Specifications

w

warning signal *See* Interpreting the Front Panel Lights

warranty *See* Warranty

warranty service *See* Obtaining Service

weight of drive *Choose your drive model from* Features and Specifications

wide SCSI *See* Narrow and Wide, Fast and Ultra SCSI

World Wide Web site *See* Worldwide Online Services

worn-out cartridges *See* Cleaning the Tape Heads

write-protection *See* Write-Protecting Cartridges

© 2000, Hewlett-Packard Company

issued october 2000 : http://www.hp.com/go/support/tape may have a later version

how to contact hp

data protection

contact hp

- americas
- europe
- asia pacific

- warranty
- customer service form

obtaining technical support

contents of this section

- before calling for service or support
- obtaining service
- contacting hp
- hp service agreements
- returning your tape drive for service
- worldwide online services

before calling for service or support

If you need help, your dealer has the latest information regarding HP products and services and can provide support under HP's comprehensive menu of reseller services. If your dealer is not able to help, you can obtain support from HP directly either through online services or by telephone.

Before calling for service or support, check that:

- Check that your HP Surestore Tape Drive is installed correctly
- Check the printed Getting Started Guide and the troubleshooting advice in this online User's Guide

obtaining service

Please use the Customer Service Form to collect the details that our Customer Service Representative will need to help solve your problem.

During the warranty period: HP provides a free telephone support service during the warranty period. Contact your local HP dealer or the appropriate HP technical support contact for your area, by selecting the region required from the navigational buttons in the left hand pane. Obtain the telephone number from the list of countries supplied. You will be connected to a responsive team waiting to help you.

After the warranty period: If you require support after your warranty has expired, you can receive support for a fee through the same telephone numbers. The fee is charged on a per incident basis. Alternatively, you can contact your local HP dealer who will be able to advise you and arrange for service.

contacting hp

A full listing of HP's service and support centres worldwide can be found at http://www.hp.com/cposupport/mail_support.html

If you do not have internet access, click on the appropriate region from the side navigation bars for a list of contact numbers correct at time of printing.

hp service agreements

HP offers a number of service agreements to meet your needs. Contact your local dealer or nearest HP office for further information.

returning your tape drive for service

Your HP Surestore tape drive comes with a 24-hour Express Exchange warranty (not available in all countries).

Before returning an HP Surestore tape drive, call the Customer Support Center for your area. When you call, make sure that you have the following information available:

- The product name and serial number (see label on the back of the appliance server)
- Date of purchase
- A description of the product fault
- A contact name for details of the failure
- A contact telephone number
- Your shipping address

The telephone service agent will verify that the unit is faulty and will make sure that a replacement unit is sent to you within 24 hours. When you receive the replacement unit, remove it from the packaging and use the packaging material for returning the faulty unit. All shipment costs are prepaid by HP.

When returning the drive to HP, any damage caused as a result of inadequate packaging is your responsibility. Use the original packing materials whenever possible.

worldwide online services

HP offers electronic services that give you a fast, interactive way to access information and help on setup, configuration, installation and operation of your product. The online services are available on the World Wide Web and FTP, as well as the country-specific resources listed later in this section.

World Wide Web

Product and support information are available from HP's web site on the Internet at `http://www.hp.com/go/tape`

FTP

Product and support information are available from our FTP site on the Internet at `ftp.hp.com/pub/information_storage/surestore`

America Online

Download support documents and discuss issues in user forums. Find us with keyword `hpstor`.

© 2000, Hewlett-Packard Company

how to contact hp

data protection

- contact hp

americas
- europe
- asia pacific

- warranty
- customer service form

north and south america

contents of this section

- check the web for up to date contact information
- hp support in north america
  - canada
  - united states
- hp support in south america
  - argentina
  - brazil
  - colombia
  - guatemala
  - chile
  - mexico
  - puerto rico
  - venezuela

check the web for up to date information

If you have internet access, click on the URL below:

http://www.hp.com/cposupport/mail_support.html

From time to time, telephone numbers and addresses may change: accessing contact details over the web will ensure you have the latest information.

If you do not have internet access, refer below for a list of contact numbers correct at time of printing:

hp support in north america

Customers in North America can contact HP on the telephone support lines listed, by country, below.

Major Account Customers in the Enterprise Market
Tape drives shipped to major North American account customers carry one of the following product numbers (as stated on the label on the base of your drive):

products for major account customers	
tape drive	**product number**
ultrium 230, internal	C7400A
ultrium 230, external	C7401A
ultrium 230, rack mounted	C7470A

If your drive carries one of these product numbers, you should contact the US Response Center on:

800-633-3600

canada

Telephone 905-206-4663

Hours of operation: 8.00 a.m. to 8:00 p.m. Monday through Friday

905-206-4663

Horaires de disponibilité : Lundi - Vendredi, 8 h 00 - 20 h 00

united states

Telephone (970) 635-1500

Hours of operation: 6.00 a.m. to 6:00 p.m. MST Monday through Friday

hp support in south america

Customers in South America can contact HP on the telephone support lines listed, by country, below.

Major Account Customers
Where a second number is listed under the sub-heading "Major Account Customers", this number should be used by major account customers where the product number (as stated on the label on the base of your drive) is as follows:

products for major account customers	
tape drive	**product number**
ultrium 230, internal	C7400A
ultrium 230, external	C7401A
ultrium 230, rack mounted	C7470A

argentina

Telephone 0810 555 5520 (from within Argentina)
(5411) 4778 8380
(outside Argentina)

Hours of operation: 8:30 a.m. to 7:30 p.m. Monday through Friday

0810 555 5520

(5411) 4778 8380

Horas de atención: Lunes a Viernes de 8:30 a 19:30 h

+54 1781 4061

Major Account Customers
Telephone +54 1781 4061

brazil

Telephone Great São Paulo: (11) 3747-7799

Other regions: 0800 157751

Hours of operation: 8:00 a.m. to 7:00 p.m. Monday through Friday

Grande São Paulo: (11) 3747-7799

Demais regiões: 0800 157751

horário de funcionamento: Pré-vendas Televendas : 2ª a 6ª feira das 08 às 22h
Sábado das 09 às 18h

Pós-vendas: 2ª a 6ª feira das 08 às 19h

Major Account Customers
Telephone +55 11 725 1588

+55 11 725 1588

chile

Telephone 800 22 5547

Hours of operation: 9:00 a.m. to 6:00 p.m. Monday through Friday

800 22 5547

Horas de atención: Lunes a Viernes de 9:00 a 18:00 h

colombia

Telephone 9 800 91477

Hours of operation: 9:00 a.m. to 6:00 p.m. Monday through Friday

9 800 91477

Horas de atención: Lunes a Viernes de 9:00 a 18:00 h

guatemala

Telephone 800 999 5305

Hours of operation: 9:00 a.m. to 6:00 p.m. Monday through Friday

Saturdays from 9:00 a.m. to 1.00 p.m.

800 999 5305

Horas de atención: Lunes a Viernes de 9:00 a 18:00 h

mexico

Mexico City

Telephone 52-58-9922

Hours of operation: 8:30 a.m. to 22:00 p.m. Monday through Friday

9:00 a.m. to 14:00 p.m. on Saturday

52-58-9922

Horas de atención: Lunes a Viernes de 8:30 a 22:00 h

Outside Mexico City

Telephone 01-800-472 6684

Hours of operation: 8:30 a.m. to 22:00 p.m. Monday through Friday

9:00 a.m. to 14:00 p.m. on Saturday

01-800-472 6684

Horas de atención: Lunes a Viernes de 8:30 a 22:00 h

+52 5258 4500

Major Account Customers
Telephone +52 5258 4500

puerto rico

Telephone 1 877 2320 589

Hours of operation: 9:00 a.m. to 5:00 p.m. Monday through Friday

1 877 2320 589

Horas de atención: Lunes a Viernes de 9:00 a 17:00 h

venezuela

Telephone 800 47 777 (Caracas 207 8488)

Hours of operation: 8:00 a.m. to 5:00 p.m. Monday through Friday

800 47 777 (Caracas 207 8488)

Horas de atención: Lunes a Viernes de 8:00 a 19.00 h

+58 2 239 2423

Major Account Customers
Telephone +58 2 239 2423

© 2000, Hewlett-Packard Company

date protection

- contact for

- americas
- europe
- asia pacific

- warranty
- customer service form

how to contact hp

europe, middle east and africa

contents of this section

- check the web for up to date contact information
- hp support in europe, middle east & africa
  - austria
  - belgium (dutch)
  - belgium (french)
  - czech republic
  - denmark
  - finland
  - france
  - germany
  - greece
  - hungary
  - ireland
  - israel
  - italy
  - netherlands
  - norway
  - other european countries - english
  - portugal
  - russian federation (moscow)
  - russian federation (st petersburg)
  - russian federation (ukraine)
  - south africa (inside RSA)
  - south africa (outside RSA)
  - spain
  - sweden
  - switzerland
  - turkey
  - united arab emirates
  - united kingdom

check the web for up to date information

If you have internet access, click on the URL below:

http://www.hp.com/groups/contact_support.html

From time to time, telephone numbers and addresses may change; accessing contact details over the web will ensure you have the latest information.

If you do not have internet access, refer below for a list of contact numbers correct at time of printing:

hp support in europe, middle east & africa

There is no charge for technical support during the warranty period (unless otherwise stated). A per-incident charge applies after the warranty period.

Customers in Europe, the Middle East and Africa can contact HP on the telephone support lines listed, by country, below.

Major Account Customers
Where a support number is listed under the sub-heading "Major Account Customers", this number should be used by major account customers where the product number (as stated on the label on the base of your drive) is as follows:

products for major account customers	
tape drive	**product number**
ultrium 230, internal	C7400A
ultrium 230, external	C7401A
ultrium 230, rack mounted	C7470A

or major account customers in Africa and the Middle East can call +41 22 780 61 11

austria

Telephone +43 (0)810 00 6080 | +43 (0)810 00 6080

Hours of operation: 8.30 to 18.00
Monday through Friday

Geschäftszeiten: Montag - Freitag, 08.30 - 18.00 Uhr

+43 (0)222 25000/250 or +43 (0)125 0000

Major Account Customers
Telephone +43 (0)222 25000/250 or +43 (0)125 0000

belgium (dutch)

Telephone +32 (0)2 626 88 06

Hours of operation: 8:00 to 17:00
Monday through Thursday

8:00 to 16:30
Friday

Major Account Customers
Telephone +32 (0)2 626 88 07

belgium (french)

Telephone +32 (0)2 626 88 07 | +32 (0)2 626 88 07

Hours of operation: 8.30 to 18.00
Monday through Friday

Horaires de disponibilité: Lundi - Vendredi , 8 h 30 - 18 h 00

Major Account Customers
Telephone +32 (0)2 778 38 00 | +32 (0)2 778 38 00

czech republic

Telephone +42 (0)2 6130 7310

Hours of operation: 8:00 to 17:00
Monday to Thursday,

8.00 to 16.30
Friday

Major Account Customers
Telephone +42 (0)2 61 307 751 or +42 (0)2 47 17 321

denmark

Telephone +45 39 29 4099

Hours of operation: 8:30 to 18:00
Monday through Friday

Major Account Customers
Telephone +45 99 19 19
or +45 4599 10 00

finland

Telephone +358 (0)203 47 288

Hours of operation: 8:30 to 18:00
Monday through Friday

Major Account Customers
Telephone +358 9 8872 2808 or +358 0887 21

france

Telephone +33 (0)1 43 62 34 34 | +33 (0)1 43 62 34 34

Hours of operation: 8.30 to 18.00
Monday through Friday

Horaires de disponibilité: Lundi - Vendredi , 8 h 30 - 18 h 00

Major Account Customers
Telephone +33 (0)1 49 76 66 07 or +33 (0)9 2 6060

+33 (0)1 49 76 66 07 or +33 1698 2 6060

germany

Telephone +49 (0)180 52 58 143 | +49 (0)180 52 58 143

Hours of operation: 8.30 to 18.00
Monday through Friday

Geschäftszeiten: Montag - Freitag, 08.30 - 18.00 Uhr

Major Account Customers
Telephone +49 (0)180 53 53 539 or +49 (0)180 441 133

+49 (0)180 53 53 539 or +49 2232 441 133

greece

Telephone +30 (01) 619 64 11

Hours of operation: 9:00 to 17:00
Monday through Friday

Major Account Customers
Telephone +30 (01) 68 96 5034 or +30 1689 5411

hungary

Telephone +36 (01) 382 1111

Hours of operation: 8:30 to 18:00
Monday through Friday

Major Account Customers
Telephone +36 (01) 481 81 11 or +36 (01) 252 4525

ireland

Telephone +353 (01) 662 5525

Hours of operation: 8:30 to 18:00
Monday through Friday

Major Account Customers
Telephone +353 (01) 284 4560

israel

Telephone +972 (09) 952 4848

Hours of operation: 9:00 to 18:00
Sunday through Thursday

Major Account Customers
Telephone +972 (09) 952 4848

italy

Telephone +39 (02) 264 10350 | +39 02 264 10350

Hours of operation: 8.30 to 18.00
Monday through Friday

Orario d'apertura: Lunedì-Venerdì, 8.30 - 18.00

Major Account Customers
Telephone +39 (02) 9212 2779 or +39 (02) 9212 2778

+39 (02) 9212 2779 or +39 (02) 9212 2778

netherlands

Telephone +31 (0)20 606 8751

Hours of operation: 8.30 to 18.00
Monday through Friday

Major Account Customers
Telephone +31 (0)20 547 7444 or +31 (0)20 547 9666

norway

Telephone +47 22 11 6299

Hours of operation: 8.30 to 18.00
Monday through Friday

Major Account Customers
Telephone +47 22 93 5601 or +47 22 73 400

other

Telephone +48 22 519 06 00

Hours of operation: 8:00 to 17:00
Monday through Friday

Major Account Customers
Telephone +48 22 608 74 00 or +48 22 375 005

portugal

Telephone +351 21 317 6333 | +351 21 317 6333

Hours of operation: 8.30 to 18.00
Monday through Friday

Horário de operação: Segunda - Sexta, 8.30 - 17:00

Major Account Customers
Telephone +351 (0)21 3555 or +351 1351 7344

+39 (02) 9212 2779 or +351 1351 7344

russian federation (moscow)

Telephone +7 095 797 3520

Hours of operation: 9:00 to 18:00
Monday through Friday

Major Account Customers
Telephone +7 095 797 3500 or +7 095 936 6885

russian federation (st petersburg)

Telephone +7 812 346 7997

Hours of operation: 9:00 to 18:00
Monday through Friday

Major Account Customers
Telephone +7 812 259 3557 or +7 095 936 6885

russian federation (ukraine)

Telephone +7 (380-44) 490-3520

Hours of operation: 9:00 to 18:00
Monday through Friday

south africa (inside RSA)

Telephone 086 000 1030

Hours of operation: 8:00 to 17:00
Monday through Friday

south africa (outside RSA)

Telephone +27 11 258 9301

Hours of operation: 8:00 to 17:00
Monday through Friday

Major Account Customers
Telephone +27 11 806 1010

spain

Telephone +34 902 321 123 | +34 902 321 123

Hours of operation: 8.30 to 18.00
Monday through Friday

Horas de atención: Lunes a Viernes de 8:30 a 18:00 h

Major Account Customers
Telephone +34 902 22 00 30 or +34 1631 1600

+34 902 22 00 30 or +34 1631 1600

sweden

Telephone +46 (0) 8 619 21 70

Hours of operation: 8.30 to 18.00
Monday through Friday

Major Account Customers
Telephone +46 (0)8 444 23 83 or +46 8700 2300

switzerland

Telephone +41 (0) 848 80 11 11

Hours of operation: 8.30 to 18.00
Monday through Friday

Major Account Customers
Telephone +41 (0)800 55 53 53 or +41 31 980 3111

turkey

Telephone +90 (212) 221 69 69

Hours of operation: 8.30 to 18.00
Monday through Friday

Major Account Customers
Telephone +90 (212) 224 59 25 or +90 (0)212 408 8773

united arab emirates

Telephone 971 4 883 8454

Hours of operation: 8.30 to 18.00
Monday through Friday:

For customers in: UAE, Bahrain, Qatar, Saudi Arabia, Jordan, Palestine, Egypt, Yemen, Lebanon, Syria and Oman (languages supported - English and Arabic)

Major Account Customers
Telephone +44 (0)1344 360 366

united kingdom

Telephone +44 (0)207 512 52 02

Hours of operation: 8.30 to 18.00
Monday through Friday

Major Account Customers
Telephone +44 (0)1344 366 366 or +44 (0)1344 360 000

other european countries (english)

Telephone +44 (0)207 512 52 02

Hours of operation: 8.30 to 18.00
Monday through Friday

Major Account Customers
Telephone +41 22 780 61 11

© 2000. Hewlett-Packard Company

issued october 2000 - http://www.hp.com/go/support/tape may have a later version

how to contact hp

asia pacific

contents of this section

- check the web for up to date contact information
- hp support in asia pacific
  - australia
  - china (PRC)
  - hong kong
  - india
  - indonesia
  - japan
  - korea, republic of
  - malaysia
  - new zealand
  - philippines
  - singapore
  - taiwan
  - thailand
  - vietnam

check the web for up to date information

If you have internet access, click on the URL below:

http://www.hp.com/cposupport/mail_support.html

From time to time, telephone numbers and addresses may change; accessing contact details over the web will ensure you have the latest information.

If you do not have internet access, refer below for a list of contact numbers correct at time of printing:

hp support in asia pacific

Customers in Asia Pacific region can contact HP on the telephone support lines listed, by country, below.

Major Account Customers
Where a second number is listed under the sub-heading "Major Account Customers", this number should be used by major account customers where the product number (as stated on the label on the base of your drive) is as follows:

products for major account customers	
tape drive	**product number**
ultrium 230, internal	C7400A
ultrium 230, external	C7401A
ultrium 230, rack mounted	C7470A

or call 852 599 700

australia

Telephone (03) 8877 8000

Hours of operation: 9.00
a.m. to 5:00 p.m.
Monday through Friday

Spare parts 1800 670 054
Hours of operation: 9:00
a.m. to 5:00 p.m.
Monday through Friday

Major Account Customers
Telephone 61 3272 2895

china (PRC)

Telephone +86 (0)10 6564 5959 +86 (0)10 6564 5959

Hours of operation: 8:30
to 17:30
Monday through Friday

+86 1505 3888

Major Account Customers
Telephone +86 1505 3888

hong kong

Telephone 800 96 7729 800 96 7729

Hours of operation: 8:30
to 17:30
Monday through Friday

852 599 7777

Major Account Customers
Telephone 852 599 7777

india

Telephone +91 11 682 6035

Hours of operation: 9:30
a.m to 5:30 p.m
Monday through Friday

indonesia

Telephone +62 (21) 350 3408

Hours of operation: 8:00
a.m to 5:00 p.m.
Monday through Friday

japan

Telephone +81 3 3335 8333 +81 3 3335 8333

Hours of operation: 9:00
to 12:00 and 13.00 to
17:00
Monday through Friday

+81 42 534 1831

Major Account Customers
Telephone +81 42 534 1831

korea, rupublic of

within Seoul only +82 (2) 3270 0700
Telephone +82 (2) 3270 0700

Hours of operation: 9:00
a.m. to 6:00 p.m.
Monday through Friday.

9.00 a.m. to 1:00 p.m on
Saturdays

080 999 0700

outside Seoul only
Telephone 080 999 0700
Hours of operation: 9:00
a.m. to 6:00 p.m.
Monday through Friday.

9.00 a.m. to 1:00 p.m on
Saturdays

+81 42 534 1831

Major Account Customers
Telephone +81 42 534 1831

malaysia

Telephone +60 (3) 295 2566

Hours of operation: 8:30
a.m. to 5:30 p.m.
Monday through Friday

Major Account Customers
Telephone +60 (3) 298 6555

new zealand

Telephone +64 (9) 356 6640

Hours of operation: 9:00
a.m. to 5:30 p.m.
Monday through Friday

philippines

Telephone +63 (2) 867 3351

Hours of operation: 8:30
a.m. to 5:30 p.m.
Monday through Friday

singapore

Telephone +65 272 5300

Hours of operation: 8:30
a.m. to 5:30 p.m
Monday through Friday

Major Account Customers
Telephone +65 293 2911

taiwan

Telephone +886 (2) 2717 0055 +886 (2) 2717 0055

Hours of operation: 8:30
a.m. to 5:30 p.m.
Monday through Friday

+886 (2) 712 0404

Major Account Customers
Telephone +886 (2) 712 0404

thailand

Telephone +66 (2) 661 4000

Hours of operation: 8:30
a.m. to 5:30 p.m.
Monday through Friday

vietnam

Telephone +84 (0) 8823 4530

Hours of operation: 8:00
a.m. to 5:00 p.m.
Monday through Friday

8.00 a.m to 12:00 p.m on
Saturday

© 2000, Hewlett-Packard Company

how to contact hp

warranty

contents of this section

- warranty conditions
  - exclusions
  - limitations
- limited warranty statement for USA, Canada, Australia and New Zealand

warranty conditions

This warranty gives you specific legal rights. You may also have other rights which vary according to where you are located.

Hewlett-Packard warrants its Surestore tape drives against defects in materials and workmanship for a period of three years, either from the date of delivery or, where the purchase price includes installation by Hewlett-Packard, from the date of installation. If a new HP Surestore tape drive is purchased as a component of an HP computer system, the tape drive warranty is automatically upgraded to the system warranty.

You are entitled to:

- automatic three-year, next day unit exchange
- system matching warranty on HP systems (internal and external units), when purchased as a component of that system
- free technical call center assistance during the product support life (does not include telephone call cost)

Further information is available via the web at: www.hp.com/support/tapewarranty

During the first three years, the 24-hour Express Exchange program (not available in all countries) allows you to receive a replacement unit by next-day delivery upon verification of a faulty tape drive. Hewlett-Packard will, at its option, either repair or replace products that prove to be defective. Should Hewlett-Packard be unable to repair or replace the product within a reasonable period of time, a refund of the purchase price may be given upon return of the product.

If you choose not to use Express Exchange, your HP Surestore tape drive must be serviced by one of the authorized repair depots within the country in which it was originally purchased. You must prepay shipping charges (together with all duty and taxes) for products returned for service. Except for products returned to you from another country, Hewlett-Packard will pay for return of products to you. If the drive is repaired by an authorized dealer, you will need to negotiate the method and cost of returning the drive with the dealer.

exclusions

The warranty on your HP SureStore tape drive does not apply to defects resulting from:

- improper or inadequate maintenance by the customer
- Customer-supplied software or interfaces
- Unauthorized modification or misuse
- Use of unsupported media
- Operation outside the environmental specifications for the product
- Improper site preparation and maintenance

limitations

Any implied warranty of merchantability or fitness is limited to the three-year duration of this written warranty. Some states or provinces do not allow limitations on how long an implied warranty lasts, so limitations or exclusions may not apply to you.

limited warranty statement for USA, Canada, Australia and New Zealand

HP warrants to you, the end-user customer, that HP hardware, accessories and supplies will be free from defects in materials and workmanship after the date of purchase, for the period specified above. If HP receives notice of such defects during the warranty period, HP will, at its option, either repair or replace products which prove to be defective. Replacement products may be either new or like-new.

1. HP warrants to you that HP software will not fail to execute its programming instructions after the date of purchase, for the period specified above, due to defects in material and workmanship when properly installed and used. If HP receives notice of such defects during the warranty period, HP will replace software media which does not execute its programming instructions due to such defects.
2. HP does not warrant that the operation of HP products will be uninterrupted or error free. If HP is unable, within a reasonable time, to repair or replace any product to a condition as warranted, you will be entitled to a refund of the purchase price upon prompt return of the product.
3. HP products may contain remanufactured parts equivalent to new in performance or may have been subject to incidental use.
4. Warranty does not apply to defects resulting from (a) improper or inadequate maintenance or calibration, (b) software, interfacing, parts or supplies not supplied by HP, (c) unauthorized modification or misuse, (d) operation outside of the published environmental specifications for the product, or (e) improper site preparation or maintenance.
5. HP MAKES NO OTHER EXPRESS WARRANTY OR CONDITION WHETHER WRITTEN OR ORAL. TO THE EXTENT ALLOWED BY LOCAL LAW, ANY IMPLIED WARRANTY OR CONDITION OF MERCHANTABILITY, SATISFACTORY QUALITY, OR FITNESS FOR A PARTICULAR PURPOSE IS LIMITED TO THE DURATION OF THE EXPRESS WARRANTY SET FORTH ABOVE. Some countries, states or provinces do not allow limitations on the duration of an implied warranty, so the above limitation or exclusion might not apply to you. This warranty gives you specific legal rights and you might also have other rights that vary from country to country, state to state, or province to province.
6. TO THE EXTENT ALLOWED BY LOCAL LAW, THE REMEDIES IN THIS WARRANTY STATEMENT ARE YOUR SOLE AND EXCLUSIVE REMEDIES. EXCEPT AS INDICATED ABOVE, IN NO EVENT WILL HP OR ITS SUPPLIERS BE LIABLE FOR LOSS OF DATA OR FOR DIRECT, SPECIAL, INCIDENTAL, CONSEQUENTIAL (INCLUDING LOST PROFIT OR DATA), OR OTHER DAMAGE, WHETHER BASED IN CONTRACT, TORT, OR OTHERWISE. Some countries, states or provinces do not allow the exclusion or limitation of incidental or consequential damages, so the above limitation or exclusion may not apply to you.

FOR CONSUMER TRANSACTIONS IN AUSTRALIA AND NEW ZEALAND: THE WARRANTY TERMS CONTAINED IN THIS STATEMENT, EXCEPT TO THE EXTENT LAWFULLY PERMITTED, DO NOT EXCLUDE, RESTRICT OR MODIFY AND ARE IN ADDITION TO THE MANDATORY STATUTORY RIGHTS APPLICABLE TO THE SALE OF THIS PRODUCT TO YOU.

Consumer Warranty Sept 16/97

© 2000, Hewlett-Packard Company

issued october 2000 http://www.hp.com/go/support/page may have a later version

how to contact hp

customer service form

data protection

- contact hp
- americas
- europe
- asia pacific
- warranty customer service form

contents of this section

- contact information
- tape drive information
- computer system information
- SCSI bus configuration
- backup information
- information about the problem

Please complete the following information about your system and the problem you are having before you call the HP Customer Support Center. You can print this form and fill in the necessary information before you call, or you can print and fax the completed form to the Customer Service Center.

contact information

Company or Organization:

Contact Person/Title:
(e.g., Mr. John Smith, Network Administrator)

Contact Telephone Number:

Fax Number:

E-Mail Address:

Mailing Address:

tape drive information

Model Name:
(example: HP Surestore Ultrium 230i)

Model Number:
(example: HP C1555B)

Serial Number:

Firmware Revision:

Date Purchased:

Date of Last Cleaning:

How many times has cleaning tape been used?

computer system information

Computer Make and Model:
(example: HP NetServer E-series)

Processor and Clock Speed:
(example: Pentium 550)

Amount of RAM:
(example: 64 MB)

Number of SCSI Controllers:

Computer Operating System/Release
(example: Novell NetWare 4.0, Windows NT 3.51, HP-UX 10.0)

Operating System Patches Installed:
(example: Service Pack 4)

Number of Hard Disks/Size/Partitions:
(example:
Disk 1: 1.2 GB, 1 partition
Disk 2: 1.8 GB, 2 partitions)

Logical or Physical Mapping of Disks:
(example:
Disk 1 = C:/, Disk 2 = S:/)

SCSI bus configuration

Host Adapter Make and Model
(example: Adaptec AHA-2940)

SCSI bus
(narrow or wide)

SCSI ID	Device	Termination	Internal / External	Devices' Bus Type
..	.....	.....	.....	.....
..	.....	.....	.....	.....
..	.....	.....	.....	.....
..	.....	.....	.....	.....
..	.....	.....	.....	.....
..	.....	.....	.....	.....
..	.....	.....	.....	.....
7	SCSI Controller	.....	.....	.....

EXAMPLE

SCSI ID	Device	Termination	Internal / External	Devices' Bus Type
0	Hard disk	No	Internal	Narrow / Single-ended
1	CD-ROM	No	Internal	Narrow / Single-ended
3	Tape Drive (HP C1533A)	No	Internal	Narrow / Single-ended
5	Tape Drive (DLT7000)	Yes	External	Wide / Single-ended
7	SCSI Controller	Automatic	HBA	Wide / Single-ended

backup information

Backup Application Name and Version or Release:

Are you using HP One Button Disaster Recovery?

Do you back up user data only?

Do you back up system information separately?
(example: Windows registry files, NetWare NDS or bindery files)

information about the problem

Light Pattern During Problem:

Any Audible Signals:

Error Messages/Code Generated:

Does the problem occur every time you try the operation?

Does the problem occur if you use another backup device?

What type of media are you using?
(Brand, Capacity, Batch No.)

Can you read the problem tape cartridge on another drive?

What result do you get when you try a new cartridge?

If you have an autoloader, are all cartridges affected the same way?

Have you run any kind of diagnostics program, such as TapeAssure? What result was reported?

Detailed Description of Problem:

© 2000, Hewlett-Packard Company

ultrium tape drive user's guide

data protection

- index of topics
- contact hp

- home page
- before you start
- operation
- cartridge care
- cleaning
- one-button disaster recovery
- specifications
- diagnostics
- troubleshooting
- FAQs

- SCSI configuration
- UNIX configuration

- ordering supplies

install

operate

cartridges

troubleshoot

This is the User's Guide for HP Surestore Ultrium internal, external and removable (rack-mounted) tape drives. It describes how to use HP Surestore Ultrium drives.

To start, click on one of the above topics or select a topic from the navigation pane on the left. For example, click on **specifications** for a detailed description of the HP Surestore Ultrium internal, external and removable drives.

Use the **index of topics** page to search for a particular topic.

Use the **contact hp** page to find out contact details for your nearest Customer Care Center.

notice

The information contained in this document is subject to change without notice.

Hewlett-Packard makes no warranty of any kind with regard to the material, including, but not limited to, the implied warranties of merchantability and fitness for a particular purpose.

Hewlett-Packard shall not be liable for errors contained herein or direct, indirect, special, incidental or consequential damages in connection with the furnishing, performance, or use of this document.

This document contains propriety information which is protected by copyright. All rights reserved. No part of this document may be photocopied, reproduced or translated to another language without the prior written consent of Hewlett-Packard.

copyright

Copyright 2000 Hewlett-Packard. All rights reserved.

Linear Tape-Open, LTO, LTO Logo, Ultrium and Ultrium Logo are U.S. trademarks of HP, IBM and Seagate.

Windows and Windows NT are U.S. registered trademarks of Microsoft Corp.

UNIX is a registered trademark of X/Open Company in the U.S. and other countries.

Adobe and Acrobat are trademarkes of Adobe Systems Incorporated.

Patented under one or more of U.S. Patents Nos. 5,003,307; 5,016,009; 5,463,390; 5,506,580; held by Hi/fn, Inc.

revision history

Edition	Date	Comments
1.0	October 2000	

© 2000, Hewlett-Packard Company

ultrium tape drive user's guide

data protection

- index of topics
- contact hp

- home page
- before you start
- operation
- cartridge care
- cleaning
- one-button disaster recovery
- specifications
- diagnostics
- troubleshooting
- FAQs

- SCSI configuration
- UNIX configuration

- ordering supplies

before you start

contents of this section

- pre-installation checklist
- installation
- how to identify your model
- computer and backup software requirements
  - computer systems
  - backup software

pre-installation check list

Before you install your HP Surestore Ultrium tape drive:

1. Check that your computer meets the requirements for installation.
2. Make a note of the model name, product number, and serial number of your tape drive and record it on page 2 of the "Getting Started" guide.
3. Collect information about the SCSI configuration of your computer and any other devices attached to it and decide how you are going to configure the drive on the SCSI bus. If you are installing on a Windows NT 4, Windows 2000 or Novell NetWare system, you can use the HP Library & TapeTools software provided on the HP Surestore Ultrium CD-ROM to do this. If you are not familiar with how to configure a SCSI bus, you may also want to read the SCSI Background information provided in this guide.
4. Select a free bay for an internal or a removable drive
   or
   Select a site for an external drive.

Caution For internal drives, the server must provide forced cooling and be capable of drawing 6 cfm (0.17 cubic meters/minute or 10.08 cubic meters/hour) of air through the tape drive. Care must be taken that empty bays have the appropriate blanking plates installed so that airflow is maintained. Refer to your server documentation for further details.

installation

The "Getting Started" guide provides detailed installation instructions.

If you have lost the printed version of this guide, click below for a PDF version of the appropriate guide:

- HP Surestore Ultrium internal drives: Getting Started guide
- HP Surestore Ultrium external drives: Getting Started guide

You need a copy of Adobe Acrobat Reader to read the PDF files. If you do not have a copy of this software, the English version is provided on the CD-ROM, or you can link to Adobe's web site to download a free copy.

.

how to identify your model

For internal drives, the model name is on the front panel and the product and serial numbers are on a label on the top of the drive.

For external drives, the model name is on the front panel and the product and serial numbers are on a label on the bottom of the drive.

For removable drives, the model name is on the front panel and the product and serial numbers are on the side of the drive.

computer and backup software

The HP Surestore Ultrium tape drive has the following hardware and software requirements:

computer systems

If you are installing the tape drive on a UNIX system, refer to the UNIX instructions for further information about the systems supported and installation instructions.

For the latest list of operating systems that support HP Surestore Ultrium drives, please consult our World Wide Web site (www.hp.com/go/connect).

HP Surestore Ultrium 230 tape drives are Ultra2 wide SCSI devices designed to operate on a low voltage differential SCSI bus (LVDS) with a burst transfer rate of 80 MB/sec. Do not use the drive on a single-ended SCSI bus as performance is restricted. Do not use on the same bus as other single-ended devices as this will switch the LVDS host adapter into single-ended mode and restrict performance. We recommend that a dedicated host bus adapter is used for the tape drive. A suitable adapter is available from HP as an accessory (see Ordering Information).

Your computer must have a properly installed and configured SCSI host adapter or a SCSI controller on the motherboard (SCSI-2 or SCSI-3 compliant) with driver software that supports the HP Surestore Ultrium drive. Check the server documentation for the specification of any built-in SCSI channels. Do not connect to a RAID controller channel; these are for disk drives only. Consult your supplier for details.

For an internal drive, you will need:

- Ultra2, Ultra160 or Ultra3 SCSI host bus adapter
- LVDS compliant SCSI ribbon cable with termination (normally supplied with the host bus adapter)
- Available 5¼-inch, full-height mounting bay (or two adjacent, half-height bays)
- Mounting hardware, if required
- Backup software that supports the tape drive

Caution The server must provide forced cooling and be capable of drawing 6 cfm (0.17 cubic meters per minute or 10.08 cubic meters per hour) of air through the tape drive. Care must be taken that empty bays have the appropriate blanking plates installed so that airflow is maintained. Refer to your server documentation.

For external drives, the cable provided with HP Surestore Ultrium 230 tape drives will attach to a computer with a wide LVDS SCSI connector (68 pins). We do not recommend connecting the drive to a SE SCSI connector or a narrow SCSI host bus adapter as this will restrict performance. If your server or host bus adapter is equipped with a very high density (VHD) wide SCSI connector, you will need to order a High-End Tape Connect Kit (adapter with VHD-to-HD cable) or 68-pin VHD-to-HD cable. (See Ordering Information.)

For removable drives installed in a HP Surestore H/A Tape Array 5500 rack enclosure, set the SCSI ID at the appropriate switch on the rear of the HP Surestore H/A Tape Array 5500 unit. There are five address switches that correspond to the five tape drives. Each drive should have a unique ID.

backup software

You need backup software that supports the HP Surestore Ultrium drive. As a general rule, native backup applications (such as NTBackup and tar) do not provide the required data streaming rate to get the full performance of your HP Surestore Ultrium drive. We recommend using a backup application, which provides better memory management as well as other useful features, such as TapeAlert. HP, Computer Associates, Veritas and Legato all provide suitable products that have been tested with HP Surestore Ultrium drives. For the latest list of backup packages that support HP Surestore Ultrium drives, please consult our World Wide Web site (www.hp.com/go/connect).

Suitable backup applications will include driver software that establishes the interface between the tape drive and the software. For detailed information about drivers, refer to the appropriate README file in the DRIVERS directory on this CD. There is a separate sub-directory for each operating system. Applications usually recognize tape drives by their manufacturers' ID string rather than their model number, so check the table below for the appropriate reference.

Drive Model	ID String
HP Surestore Ultrium 230 tape drive	HP Ultrium 1-SCSI

© 2000, Hewlett-Packard Company

ultrium tape drive user's guide

data protection

- index of topics
- contact hp

- home page
- before you start
- operation
  - the front panel lights
  - loading & unloading
  - replacing a removable drive
- cartridge care
- cleaning
- one-button disaster recovery
- specifications
- diagnostics
- troubleshooting
- FAQs

- SCSI configuration
- UNIX configuration

- ordering supplies

operation

contents of this section

- switching on the drive
- if you have problems during self test
- resetting the drive

related topics

- interpreting the front panel lights
- cartridges
  - labeling and write-protecting
  - loading and unloading
  - caring for
- replacing a removable drive

switching on the drive

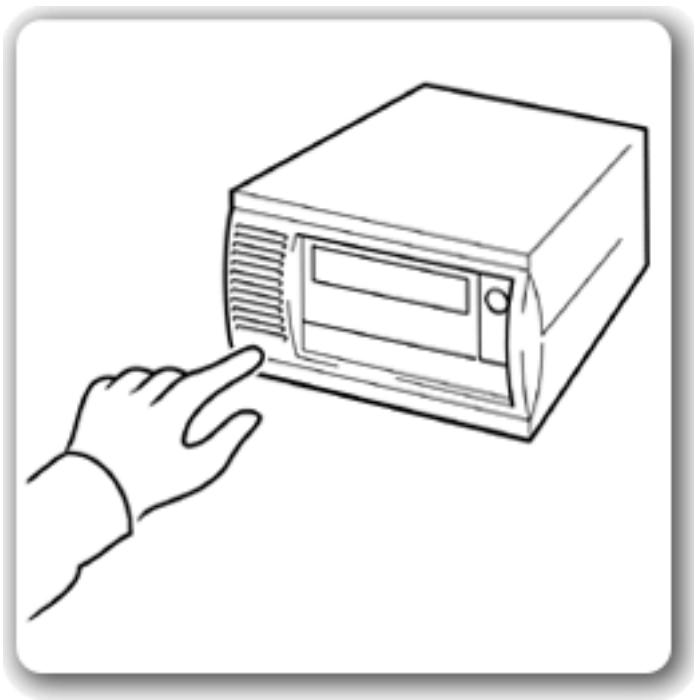

Internal drives are powered on when you switch on your computer.

Removable drives are powered on when you switch on your tape array and computer.

Switch on **external drives** using the power switch on the front panel, and then switch on the computer.

if you have problems during self test

If the Ready light goes off but the all the other status lights show steady amber at the end of the self-test, this indicates a fault condition:

- If you have just installed the drive, check the installation for loose connections and repeat the self-test.
- Try the troubleshooting procedures to determine what the problem is.
- If the fault condition persists, call for assistance.

resetting the drive

There is an Emergency Reset on internal, external and removable drives. Use this to reset the drive without powering off the drive and computer, for example if the drive stops responding. (Use something thin, like the end of a paperclip to press the reset.)

© 2000, Hewlett-Packard Company

ultrium tape drive user's guide

data protection

- index of topics
- contact hp

- home page
- before you start
- operation
  - the front and rear panel lights
  - loading & unloading
  - replacing a removable drive
- cartridge care
- cleaning
- one-button disaster recovery
- specifications
- diagnostics
- troubleshooting
- FAQs

- SCSI configuration
- UNIX configuration

- ordering supplies

the front and rear panel lights

contents of this section

- front panel lights
- rear panel lights (external drives only)

front panel lights

The front panel of your HP Surestore Ultrium tape drive has four lights (LEDs) as shown below.

Ready (top light, green)

This LED is the Power On/Activity LED.

On, steady:	The drive is ready for use. It is powered up but not doing anything.
On, flashing:	The drive is busy. For example: it is carrying out Write, Read, Self Test or firmware download.
Off:	The drive power is off or there was a failure during self-test.

Drive Error (second light, amber)

This LED is to indicate a Drive Error.

Off:	No fault has been detected.
On, flashing:	The drive has suffered an unrecoverable hardware failure. A power cycle or a successful tape load will turn off the LED, but if the hardware fault is still present it will come on again if the same operation is performed.

Tape Error (third light, amber)

This LED is to indicate a Tape Error.

Off:	No fault has been detected.
On, flashing:	The tape currently in the drive is faulty. This LED could come on for a number of reasons, but they all relate to the tape being in error in some way, such as unreadable cartridge memory or unsupported tape. Do not use the cartridge; replace it. The LED will go out when a tape load is started.

Use Cleaning Cartridge (bottom light, amber)

This LED indicates when a cleaning tape should be used. See also "Cleaning".

On, steady:	A cleaning cartridge is being used. the Ready light will also flash.
On, flashing:	The drive needs cleaning. The light will continue to flash if the drive is power cycled, and will only go out after a supported cleaning tape has been used.
Off:	The drive does not require cleaning.

Note: LEDs during firmware download operation.

- If a corrupt or incompatible image is download for firmware upgrade then the Ready, Drive and Tape Error LEDs will flash until a tape load is started.
- If a valid image is downloaded the ready LED will flash briefly, will be steady for about half a minute and then will flash until the drive resets itself. In this time DO NOT RESET OR POWER CYCLE THE DRIVE.

rear panel lights (external only)

The rear panel of your HP Surestore Ultrium external tape drive has two additional lights (LEDs) as shown below.

Act TERM (termination active)

On: the drive enclosure is providing active termination on the SCSI bus
Off: the drive enclosure is not providing active termination (there is another device or terminator attached to the SCSI-OUT connector)

Fan/PWR Fault (fault with the fan or power supply)

Off: no fault has been detected
On: a fault with the fan or power supply has been detected. Call for assistance.

© 2000, Hewlett-Packard Company

ultrium tape drive user's guide

data protection

- index of topics
- contact hp

- home page
- before you start
- operation
  - the front panel lights
  - loading & unloading
  - replacing a removable drive
- cartridge care
- cleaning
- one-button disaster recovery
- specifications
- diagnostics
- troubleshooting
- FAQs

- SCSI configuration
- UNIX configuration

- ordering supplies

loading and unloading

contents of this section

- to load a cartridge
- to unload a cartridge
- to label a cartridge
- to write protect a cartridge

related topics

- cartridge care
- replacing a removable drive

to load a cartridge

Use HP Ultrium cartridges with your drive.

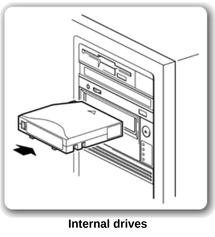

Internal drives

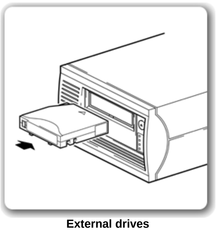

External drives

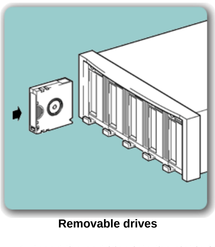

Removable drives

Note: With removable drives the cartridge is rotated 90 degrees to match the orientation of the drive in the tape array.

1. Insert the cartridge into the slot in front of the drive with the white arrow uppermost and facing the drive door.
2. Apply gentle pressure on the rear of the cartridge until the drive takes the cartridge and loads it.

The Ready light flashes green while the drive performs its load sequence. When the cartridge is loaded, the Ready light shows steady green.

Do not try to force the cartridge if it does not load properly. The drive will eject the cartridge after about 10 seconds so you can load it again.

to unload a cartridge

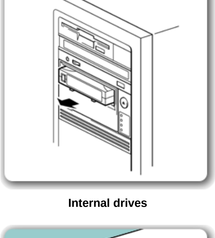

Internal drives

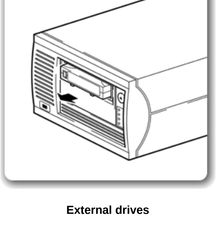

External drives

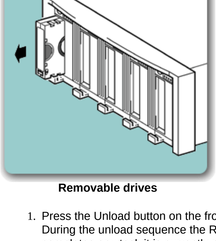

Removable drives

Note: With removable drives the cartridge is rotated 90 degrees to match the orientation of the drive in the tape array.

1. Press the Unload button on the front panel.
   During the unload sequence the READY light flashes green. The drive completes any task it is currently performing, winds the tape to the beginning and ejects the cartridge. Once the tape has rewound, the eject cycle will take less than 13 seconds.
2. Remove the cartridge and store it in its plastic case in a cool, dry atmosphere.

to label a cartridge

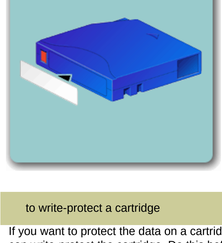

Use HP Ultrium cartridges with your drive. Ensure that only one label is stuck to the label area of the cartridge. Never use non-standard labels, and never stick anything to the cartridge other than in the label area.

The label and write-protect switch are on the rear face of the cartridge, as illustrated.

to write-protect a cartridge

If you want to protect the data on a cartridge from being altered or overwritten, you can write-protect the cartridge. Do this before you insert the cartridge. If you slide the red tab after the cartridge is inserted in the drive, the change will not take effect until the cartridge is removed and reinserted.

Caution: Write-protection will not prevent a cartridge being erased by bulk-erasure or degaussing. **Do not bulk erase Ultrium format cartridges.** This will destroy pre-recorded servo information and render the cartridge unusable.

To write-protect a cartridge, slide the red tab by the label area on the rear face of the cartridge to close the hole.

Note the padlock on the tab that indicates that the cartridge is protected.

To write-enable a cartridge, slide the red tab back so that the hole is open.

© 2000, Hewlett-Packard Company

ultrium tape drive user's guide

data protection

- index of topics
- contact hp

- home page
- before you start
- operation
  - the front and rear panel lights
  - loading & unloading
  - replacing a removable drive
- cartridge care
- cleaning
- one-button disaster recovery
- specifications
- diagnostics
- troubleshooting
- FAQs

- SCSI configuration
- UNIX configuration

- ordering supplies

replacing a removable drive

contents of this section

- overview
- removing a drive
- replacing a drive

overview

HP Surestore Ultrium removable drives can be removed and replaced without powering down the HP Surestore H/A Tape Array 5500 and without interrupting operations to the other drives in the array. However you should be aware of the following:

- In Berkeley mode, the tape position will remain unchanged by a device close operation.
- In AT&T mode, a device close operation will cause the tape to be repositioned just after the next tape filemark (the start of the next file).

If all drives in the tape array are powered up when the system is turned on, the host will be aware of those drives. You can remove any of those drives and replace it with another drive without disrupting the system.

If a drive is not powered up or you place a drive in an empty slot after the system has been powered up, the system will have to be reset before the host will recognize the drive.

Removable drives allow modules to be replaced while powered up as long as no data is being transmitted from the system to the module or vice versa. The SCSI IDs are controlled by the tape array, not by the drives themselves, so if you remove a drive and replace it with another the ID will not change.

removing a drive

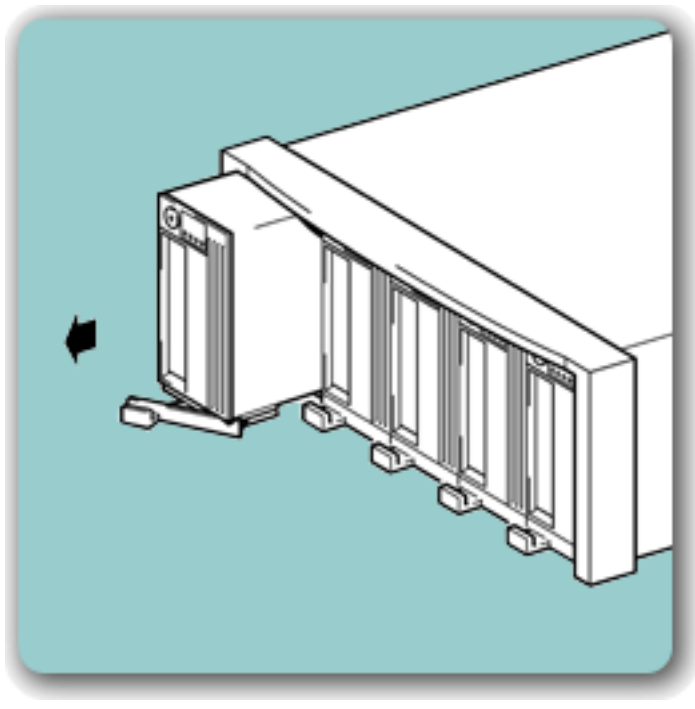

1. Pull the extraction lever of the drive that you want to replace so that it is in the out position.
2. Using the extraction lever, pull the drive gently and firmly out of the tape array.

replacing a drive

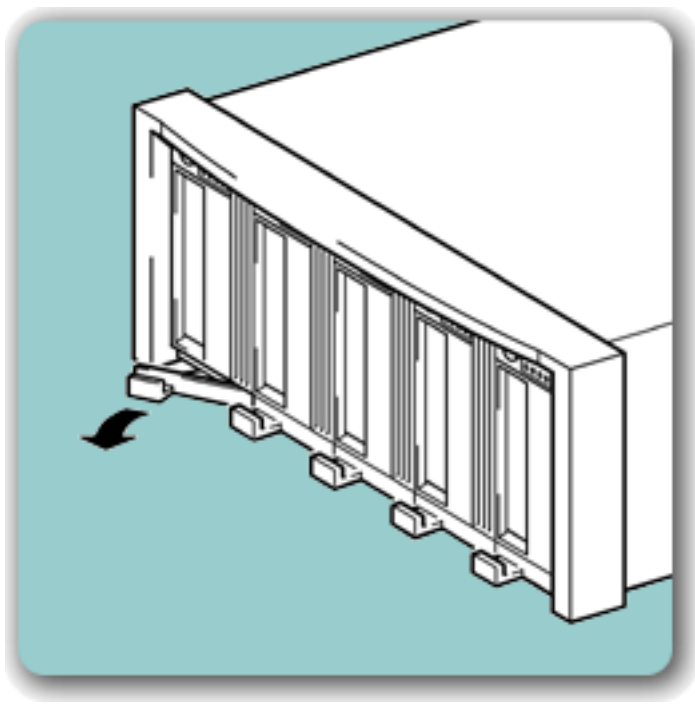

1. Ensure that the extractor lever on the drive is in the out position, as shown in the picture.
2. Lift the drive carefully and turn it so that it is on its side with the extractor lever at the bottom.
3. Align the rear of the drive with the guides on the bottom of the HP Surestore H/A Tape Array 5500.
4. Slide the drive along the guides until the connectors on the back mate with the connectors at the back of the enclosure.
5. Push the extractor lever in until it locks the drive in position.

© 2000, Hewlett-Packard Company

ultrium tape drive user's guide

data protection

- index of topics
- contact hp

- home page
- before you start
- operation
- cartridge care
- cleaning
- one-button disaster recovery
- specifications
- diagnostics
- troubleshooting
- FAQs

- SCSI configuration
- UNIX configuration

- ordering supplies

cartridge care

contents of this section

- choosing cartridges
- caring for cartridges
- using cartridges
- storing cartridges
- maximizing tape life
- avoiding condensation

related topics

- write-protecting cartridges
- labelling cartridges
- loading and unloading cartridges
- ordering cartridges

choosing cartridges

Only rely on the best media to protect your valuable data. Thanks to HP's rigorous testing programs, HP Ultrium data and cleaning cartridges are the safest investment you can make.

HP is not only the leader in tape backup but also the leading supplier of LTO cartridges. HP LTO cartridges are designed to meet the exacting mechanical, environmental and durability specifications of data storage applications.

Order online at: www.hp.com/go/storagemedia.

Important: You must use HP Ultrium cleaning cartridges with HP Surestore Ultrium tape drives, as cleaning cartridges from other media manufacturers will not be accepted by the drive.

We recommend HP Ultrium 200 GB (assumes 2:1 compression) cartridges for use with HP Surestore Ultrium tape drives. These are single reel cartridges that match your drive's format and are optimized for high capacity, throughput and reliability.

HP Surestore Ultrium tape drives will also support other capacity HP Ultrium cartridges. Do **not** use HP DLTIIItape or DLTIVtape cartridges.

caring for cartridges

Under optimum environmental conditions, Hewlett-Packard LTO cartridges are currently specified to 1,000,000 passes over any part of the tape. In operational terms, this can be translated to about 2000 full backup or restore operations. Under severe environmental conditions, particularly where the tape drive is used at very low humidity or if certain areas of the tape are accessed frequently, the number of backup operations should be limited even further.

Caution: Ensure that only one label is stuck to the label area of the cartridge. Never use non-standard labels, and never stick anything to the cartridge other than in the label area.

using cartridges

Only use Ultrium LTO cartridges in temperatures in the tape drive's operating range from 10C to 35C (50°F to 95°F) and 20 to 80% relative humidity (noncondensing). If you expose cartridges to temperatures outside the operating limits, stabilize them before you use them. To do this, leave the cartridges in the operating environment for 24 hours.

storing cartridges

- Store cartridges at temperatures between 16°C and 32°C (61°F and 90°F) with a relative humidity between 20% and 80%.
- Always keep the cartridges in a clean environment.
- Always store cartridges in their plastic cases when not in use.

maximizing tape life

- Do not touch the tape surface.
- Do not attempt to clean the tape path or tape guides inside the cartridge.
- Do not leave cartridge tapes in excessively dry or humid conditions.
- Do not leave cartridges in direct sunlight or in places where magnetic fields are present (for example, under telephones, next to monitors or near transformers).
- Do not drop cartridges or handle them roughly.
- Do not stick more than one label onto cartridges; extra labels can cause the cartridges to jam in the tape drive.

avoiding condensation

Condensation can be a problem for tape drives and cartridges. To minimize the chance of condensation, stay within the specifications for using and storing cartridges above and observe the following guidelines:

1. Position the drive where the temperature is relatively stable -- away from open windows, heat sources and doors.
2. Avoid leaving cartridges in severe temperature conditions, for example, in a car standing in bright sunlight.
3. Avoid transferring data (reading from and writing to cartridges) when the temperature is changing by more than 10°C (18°F) per hour.
4. If you bring a cold tape drive or tape cartridge into a warm room, allow time for it to warm to room temperature before using it. For example, if you have moved the drive from a cold car to a warm room, allow time for the drive to reach room temperature (up to 24 hours if the temperature change is extreme).

© 2000, Hewlett-Packard Company

ultrium tape drive user's guide

data protection

- index of topics
- contact hp

- home page
- before you start
- operation
- cartridge care
- cleaning
- one-button disaster recovery
- specifications
- diagnostics
- troubleshooting
- FAQs

- SCSI configuration
- UNIX configuration

- ordering supplies

cleaning

contents of this section

- cleaning strategy
- cleaning cartridge
- cleaning the tape heads on a drive

cleaning strategy

Ultrium drives have been developed to have a minimal cleaning requirement. The **Use cleaning cartridge** orange LED on the tape drive will flash when the drive needs cleaning. Only insert a cleaning cartridge into the tape drive when the light flashes.

IMPORTANT: It is essential to use only HP Ultrium cleaning cartridges with HP Surestore Ultrium tape drives. Cleaning cartridges from other media manufacturers will not be accepted by the drive. Use of HP cleaning media will ensure your tape drive is fully protected.

cleaning cartridge

You must use only HP Ultrium cleaning cartridges to clean the tape heads. A cleaning cartridge is supplied with each tape drive.

Do **not** use swabs or other means of cleaning the heads. The cleaning cartridge uses a special tape to clean the tape heads.

A cleaning cartridge can be used up to 15 times. If the cleaning cartridge is ejected immediately then it has expired or it is not an HP Ultrium cleaning cartridge. Discard it and use a new one (see Ordering Information).

cleaning the tape heads on a drive

1. Insert a cleaning cartridge into the drive. The tape drive automatically loads the cartridge and cleans the heads.
   During the cleaning cycle the orange ‘Use Cleaning Cartridge’ LED will be on and the green ‘Ready’ LED will flash.
   At the end of the cleaning cycle, the drive ejects the cartridge. The cleaning cycle can take up to 5 minutes. If the cleaning cartridge ejects immediately, it has expired or it is not an HP Ultrium cleaning cartridge. In this case, discard the cleaning cartridge and repeat the operation with a new one.

2. Remove the cleaning cartridge from the drive.

Note: The drive's TapeAlert feature will send a message to your backup application when the tape heads need cleaning or a cleaning cartridge has expired.

© 2000, Hewlett-Packard Company

ultrium tape drive user's guide

data protection

- index of topics
- contact hp

- home page
- before you start
- operation
- cartridge care
- cleaning
- one-button disaster recovery
- specifications
- diagnostics
- troubleshooting
- FAQs

- SCSI configuration
- UNIX configuration

- ordering supplies

one-button disaster recovery

contents of this section

- what is hp obdr?
- types of system disasters

related topics

- latest connectivity and availability information

hp one-button disaster recovery

All HP Surestore Ultrium tape drives will be able to support the HP One-Button Disaster Recovery feature.

In order to make full use of HP One-Button Disaster Recovery, you need to have a system and backup software that supports one-button disaster recovery (OBDR). Software that supports one-button disaster recovery on Ultrium drives will be available early 2001.

Refer to our World Wide Web site for the latest information about software and system/operating system compatibility: www.hp.com/support/ultriumOBDR.

You will also find details about any required firmware updates and be able to access the latest troubleshooting information and a quick reference user's guide from this site.

what is hp obdr

HP One-Button Disaster Recovery, OBDR, is the easiest-to-use disaster recovery solution on the market. Using just the tape drive and the most recent backup cartridge you can recover from hard disk failure, data corruption, viruses and like-for-like hardware replacement. The touch of one button restores the operating system, configuration, applications and data files to their status at the time the backup cartridge was made.

When you run HP One-Button Disaster Recovery, your tape drive goes through the following sequence:

- It goes into a special disaster recovery mode that enables it to restore your operating system and reboot. It acts like a bootable CDROM. (Your system's ability to boot from CDROM is normally enabled by default. If you have changed this setting, you will need to enable it again. Refer to your system BIOS manual for further details.)
- It returns to normal tape drive mode and restores the data.

types of system disaster

HP One-Button Disaster Recovery allows you to recover from the following types of system disaster:

- Hard disk failures, as long as the replacement hard disk is the same size or larger than the original and uses the same interface (for example, replace a SCSI hard disk with another SCSI disk)
- File corruption because of an operating system error
- File corruption because of an application software error
- Viruses that prevent you from booting your system correctly
- User errors that stop you from booting your system correctly
- Hardware failures where the server is replaced by an identical component (for example: a Kayak is replaced by another Kayak of exactly the same configuration)

© 2000, Hewlett-Packard Company

issued october 2000 : http://www.hp.com/go/support/tape may have a later version

ultrium tape drive user's guide

data protection

- index of topics
- contact hp

- home page
- before you start
- operation
- cartridge care
- cleaning
- one-button disaster recovery
- specifications
  - ultrium 230i
  - ultrium 230e
  - ultrium 230m
- diagnostics
- troubleshooting
- FAQs

- SCSI configuration
- UNIX configuration

- ordering supplies

features and specifications

Choose your model from the bulleted list below

Internal Drives

- HP Surestore Ultrium 230i tape drive

External Drives

- HP Surestore Ultrium 230e tape drive

Removable Drives

- HP Surestore Ultrium 230m tape drive

© 2000, Hewlett-Packard Company

ultrium tape drive user's guide

data protection

- index of topics
- contact hp

- home page
- before you start
- operation
- cartridge care
- cleaning
- one-button disaster recovery
- specifications
  - ultrium 230i
  - ultrium 230e
  - ultrium 230m
- diagnostics
- troubleshooting
- FAQs

- SCSI configuration
- UNIX configuration

- ordering supplies

hp surestore ultrium 230i

contents of this section

- features
- specifications
  - physical specification
  - power requirements
  - performance
  - operating limits
  - non-operating limits
- safety and electromagnetic compatibility

features

The HP SureStore Ultrium 230i combines capacity and performance with reliability and low cost of ownership, making it the ideal choice for network backup. Your new tape drive provides the following key features:

- Latest Ultrium Generation 1 technology
- Capacity of 100 gigabytes (native) on a single HP Ultrium cartridge
- Built-in read-after-write verification for a high level of data integrity
- Sustained transfer rate of 15 MB/s (native)
- Data Rate Matching (DRM)
- Intelligent LTO-DC dual-mode compression algorithm
- Failsafe leader capture mechanism
- LTO-Cartridge Memory
- TapeAlert support for worry-free backup
- HP Library & TapeTools software to verify successful installation and troubleshoot problems
- HP One-Button Disaster Recovery compatible (available Spring 2001)
- Ultra 2 Wide SCSI interface

specifications

physical specification

dimensions	146 mm (5.75") W 82.5 mm (3.25") H 203 mm (8.0") D
weight	1.9 kg (4.2 lbs)

power requirements

power consumption	+5V @ 5.2A typical +12V @ 0.7A typical +5V @ 6.3A (max) +12V @2.75A (max)

performance

interface	Ultra wide SCSI-2
recording format	LTO Ultrium Generation 1
media	LTO Ultrium
capacity	100 GB (native)
sustained transfer rate	native 15 MB/sec compressed 30 MB/sec (assumes 2:1 compression)
burst transfer rate	80 MB/sec (Ultra2 SCSI wide)
file access time (from BOT)	71s typical 142s maximum
load to BOT	< 25s
unload from BOT	< 13s
rewind time	142s (100 GB tape)
rewind tape speed	4.1 m/s
reposition time	2.5s

operating limits

temperature	10°C to 35°C (50°F to 95°F)
humidity	20 to 80 RH (non-condensing) 30%/hr maximum operating humidity rise
maximum wet bulb temperature	26°C (78°F)
temperature gradient	< 10°C per hour
operating altitude	0 to 4000 m (0 to 15,000 ft)
airflow	0.17 cubic meters per minute (6 cubic feet per minute) Positive airflow must be maintained
vibration	0.3G pk 5-250 Hz (sine) 0.3G rms 5-250 Hz (random)
shock survival	5G 3ms (no performance change) 2G 11ms (no performance change) 8G 11ms (no data loss)

non-operating limits

temperature	-40°C to 66°C (-40°F to 151°F)
humidity	10 to 95 RH (non-condensing)
temperature rise	20°C per hour
humidity rise	30%/hr
non-operating altitude	0 to 15,250 m (0 to 50,000 ft)
noise level	<5.0 bel sound power
vibration	0.75G pk 5-500 Hz (sine) 2.41G rms 5-500 Hz (random)
shock survival	90G 3ms (half sine) 30G 26ms (trapeziodal)

safety and electromagnetic compatibility

- CSA Certification to C22.2, No. 950 Amd 4
- UL Listed to UL 1950 Amd 4
- CE Declaration of Conformity CE 73/23/EEC Amended by (93/68/EEC)
- TUV Product Service (TUV EN60950 and IEC 950)
- GOSH CB report with deviations
- FCC 47 CFR Parts 2 & 15 with reference to ANSI C63.4:1992 (CISPR 22:1985 with amendments)
- CE Declaration of Conformity CE 73/23/EEC Amended by (93/68/EEC)
- C-TICK Approved (AS/NZS 3548)
- RRL Approved (RRL MIC No. 1996-18)
- BCIQ Approved (CNS 13438)

© 2000, Hewlett-Packard Company

ultrium tape drive user's guide

data protection

- index of topics
- contact hp

- home page
- before you start
- operation
- cartridge care
- cleaning
- one-button disaster recovery
- specifications
  - ultrium 230i
  - ultrium 230e
  - ultrium 230m
- diagnostics
- troubleshooting
- FAQs

- SCSI configuration
- UNIX configuration

- ordering supplies

hp surestore ultrium 230e

contents of this section

- features
- specifications
  - physical specification
  - power requirements
  - performance
  - operating limits
  - non-operating limits
- safety and electromagnetic compatibility

features

The HP SureStore Ultrium 230e tape drive combines capacity and performance with reliability and low cost of ownership, making it the ideal choice for network backup. Your new tape drive provides the following key features:

- Latest Ultrium Generation 1 technology
- Capacity of 100 gigabytes (native) on a single HP Ultrium cartridge
- Built-in read-after-write verification for a high level of data integrity
- Sustained transfer rate of 15 MB/s (native)
- Data Rate Matching (DRM)
- Intelligent LTO-DC dual-mode compression algorithm
- Failsafe leader capture mechanism
- LTO-Cartridge Memory
- TapeAlert support for worry-free backup
- HP Library & TapeTools software to verify successful installation and troubleshoot problems
- HP One-Button Disaster Recovery compatible (available Spring 2001)
- Ultra 2 Wide SCSI interface

specifications

physical specification

dimensions	208 mm (8.2") W 122 mm (4.8") H 298 mm (11.7") D
weight	5.3 kg (11.7 lbs)

power requirements

power	100-240 VAC 50/60 Hz 0.7A max. Auto-ranging. Power connection IEC 320

performance

interface	Ultra wide SCSI-2
recording format	LTO Ultrium Generation 1
media	LTO Ultrium
capacity	100 GB (native)
sustained transfer rate	native 15 MB/sec compressed 30 MB/sec (assumes 2:1 compression)
burst transfer rate	80 MB/sec (Ultra2 SCSI wide)
file access time (from BOT)	71s typical 142s maximum
load to BOT	< 25s
unload from BOT	< 13s
rewind time	142s (100 GB tape)
rewind tape speed	4.1 m/s
reposition time	2.5s

operating limits

temperature	10°C to 35°C (50°F to 95°F)
humidity	20 to 80 RH (non-condensing) 30%/hr maximum operating humidity rise
maximum wet bulb temperature	26°C (78°F)
temperature gradient	< 10°C per hour
operating altitude	0 to 4000 m (0 to 15,000 ft)
airflow	0.17 cubic meters per minute (6 cubic feet per minute) Positive airflow must be maintained
vibration	0.3G pk 5-250 Hz (sine) 0.3G rms 5-250 Hz (random)
shock survival	5G 3ms (no performance change) 2G 11ms (no performance change) 8G 11ms (no data loss)

non-operating limits

temperature	-40°C to 66°C (-40°F to 151°F)
humidity	10 to 95 RH (non-condensing)
temperature rise	20°C per hour
humidity rise	30%/hr
non-operating altitude	0 to 15,250 m (0 to 50,000 ft)
noise level	<5.0 bel sound power
vibration	0.75G pk 5-500 Hz (sine) 2.41G rms 5-500 Hz (random)
shock survival	90G 3ms (half sine) 30G 26ms (trapeziodal)

safety and electromagnetic compatibility

- CSA Certification to C22.2, No. 950 Amd 4
- UL Listed to UL 1950 Amd 4
- CE Declaration of Conformity CE 73/23/EEC Amended by (93/68/EEC)
- TUV Product Service (TUV EN60950 and IEC 950)
- GOSH CB report with deviations
- FCC 47 CFR Parts 2 & 15 with reference to ANSI C63.4:1992 (CISPR 22:1985 with amendments)
- CE Declaration of Conformity CE 73/23/EEC Amended by (93/68/EEC)
- C-TICK Approved (AS/NZS 3548)
- RRL Approved (RRL MIC No. 1996-18)
- BCIQ Approved (CNS 13438)

© 2000, Hewlett-Packard Company

ultrium tape drive user's guide

data protection

- index of topics
- contact hp

- home page
- before you start
- operation
- cartridge care
- cleaning
- one-button disaster recovery
- specifications
  - ultrium 230i
  - ultrium 230e
  - ultrium 230m
- diagnostics
- troubleshooting
- FAQs

- SCSI configuration
- UNIX configuration

- ordering supplies

hp surestore ultrium 230m

contents of this section

- features
- specifications
  - physical specification
  - power requirements
  - performance
  - operating limits
  - non-operating limits
- safety and electromagnetic compatibility

features

The HP SureStore Ultrium 230m combines capacity and performance with reliability and low cost of ownership, making it the ideal choice for network backup. Your new tape drive provides the following key features:

- Latest Ultrium Generation 1 technology
- Capacity of 100 gigabytes (native) on a single HP Ultrium cartridge
- Built-in read-after-write verification for a high level of data integrity
- Sustained transfer rate of 15 MB/s (native)
- Data Rate Matching (DRM)
- Intelligent LTO-DC dual-mode compression algorithm
- Failsafe leader capture mechanism
- LTO-Cartridge Memory
- TapeAlert support for worry-free backup
- HP Library & TapeTools software to verify successful installation and troubleshoot problems
- HP One-Button Disaster Recovery compatible (available Spring 2001)
- Ultra 2 Wide SCSI interface

specifications

physical specification

dimensions	208 mm (8.2") W 122 mm (4.8") H 298 mm (11.7") D
weight	5.3 kg (11.7 lbs)

power requirements

power consumption	+5V @ 5.2A typical +12V @ 0.7A typical +5V @ 6.3A (max) +12V @2.75A (max) All power for rack-mounted drives is provided by the HP Surestore H/A Tape Array 5500 or similar rack unit.

performance

interface	Ultra wide SCSI-2
recording format	LTO Ultrium Generation 1
media	LTO Ultrium
capacity	100 GB (native)
sustained transfer rate	native 15 MB/sec compressed 30 MB/sec (assumes 2:1 compression)
burst transfer rate	80 MB/sec (Ultra2 SCSI wide)
file access time (from BOT)	71s typical 142s maximum
load to BOT	< 25s
unload from BOT	< 13s
rewind time	142s (100 GB tape)
rewind tape speed	4.1 m/s
reposition time	2.5s

operating limits

temperature	10°C to 35°C (50°F to 95°F)
humidity	20 to 80 RH (non-condensing) 30%/hr maximum operating humidity rise
maximum wet bulb temperature	26°C (78°F)
temperature gradient	< 10°C per hour
operating altitude	0 to 4000 m (0 to 15,000 ft)
airflow	0.17 cubic meters per minute (6 cubic feet per minute) Positive airflow must be maintained
vibration	0.3G pk 5-250 Hz (sine) 0.3G rms 5-250 Hz (random)
shock survival	5G 3ms (no performance change) 2G 11ms (no performance change) 8G 11ms (no data loss)

non-operating limits

temperature	-40°C to 66°C (-40°F to 151°F)
humidity	10 to 95 RH (non-condensing)
temperature rise	20°C per hour
humidity rise	30%/hr
non-operating altitude	0 to 15,250 m (0 to 50,000 ft)
noise level	<5.0 bel sound power
vibration	0.75G pk 5-500 Hz (sine) 2.41G rms 5-500 Hz (random)
shock survival	90G 3ms (half sine) 30G 26ms (trapeziodal)

safety and electromagnetic compatibility

- CSA Certification to C22.2, No. 950 Amd 4
- UL Listed to UL 1950 Amd 4
- CE Declaration of Conformity CE 73/23/EEC Amended by (93/68/EEC)
- TUV Product Service (TUV EN60950 and IEC 950)
- GOSH CB report with deviations
- FCC 47 CFR Parts 2 & 15 with reference to ANSI C63.4:1992 (CISPR 22:1985 with amendments)
- CE Declaration of Conformity CE 73/23/EEC Amended by (93/68/EEC)
- C-TICK Approved (AS/NZS 3548)
- RRL Approved (RRL MIC No. 1996-18)
- BCIQ Approved (CNS 13438)

© 2000, Hewlett-Packard Company

ultrium tape drive user's guide

diagnostics

data protection

- index of topics
- contact hp

- home page
- before you start
- operation
- cartridge care
- cleaning
- one-button disaster recovery
- specifications
- diagnostics
- troubleshooting
- FAQs

- SCSI configuration
- UNIX configuration

- ordering supplies

contents of this section

- HP Library & Tape Tools diagnostic utility
  - installing
  - using
  - compatibility
  - firmware upgrades
- TapeAlert
  - how it works
  - TapeAlert for OpenView
  - a new standard
  - summary

HP Library & Tape Tools diagnostic utility

The HP Library & Tape Tools software provides a number of utilities for getting information about your tape drive and troubleshooting problems. It includes the following functionality:

- Installation help and advice to help you install your product and operate it correctly
- **A Discovery** utility to find out what devices are attached to your SCSI bus
- An **identity** utility to find out detailed information about individual devices, for example the firmware version.
- **Tests** to check that your drive is operating correctly.
- **A Firmware Update Utility** that helps you find upgrade files for your tape drive and performs the upgrade
- **A Support Ticket** that generates detailed troubleshooting information for support calls (if you are connected to the internet, you will be able to e-mail this information directly to your Support Center)
- Comprehensive **Help** that is topic sensitive, should you need additional information for the screen currently displayed

Updates and the latest versions of this software are available from our World Wide Web site: www.hp.com/support/tapetools

installing HP Library & Tape Tools

You can install HP Library & Tape Tools from this CD-ROM or from the web. The installer on the CD-ROM includes the option to install all of the available firmware files: on the web, the tool is distributed without firmware and firmware files are downloaded separately. In either case, installation is simply a question of selecting the required option and following the instructions on the screen.

If you do not want to install HP Library & Tape Tools onto your computer, you will be able to run it directly from the CD-ROM. In this mode, it will not update or generate any files on your system.

Note: Earlier versions of the HP Surestore CD-ROM include a link from the HP Library & Tape Tools topic on the CD-ROM to the web site. The software must be installed from the web.

using HP Library & Tape Tools

HP Library and Tape Tools checks for the presence of a SCSI controller and its driver software and identifies the SCSI IDs of existing SCSI devices. You can then select the required device from the device list and run one of the diagnostic utilities for that device by selecting the appropriate icon: Identity, Firmware, Test or Support.

For ease of use, comprehensive online help is built into the software.

compatibility

There are HP Library & Tape Tools versions for:

- Windows NT 4.0 (workstation and server)
- Windows 2000 (professional and server)
- Novell NetWare 5 or 5.1

firmware upgrades

You can update the firmware in HP Surestore Ultrium tape drives either by downloading over the SCSI bus or by loading a firmware update tape.

Use HP Library & Tape Tools to download via SCSI. Any tape in the drive will be ejected automatically before update. The green 'Ready' LED flashes during firmware update for about 30 seconds and returns to the ON state when the update is completed. In this time DO NOT RESET OR POWER CYCLE THE DRIVE.

Note: If a corrupt or incompatible image is downloaded for firmware upgrade then the Ready, Drive and Tape Error LEDs will flash until a tape load is started.

Firmware update tapes are only available from HP. Refer to the Hewlett-Packard Support web site for update information (www.hp.com/support/ultrium). To update the firmware from tape, just insert the firmware update tape into the drive. DO NOT RESET OR POWER CYCLE THE DRIVE during firmware update.

TapeAlert

Tape storage systems have a vital role to play in backing up essential data safely and securely. Yet until now, there has been no reliable way to identify errors and potential problems that may compromise their effectiveness or reliability.

Thanks to a new industry standard developed by Hewlett-Packard, however, that situation has changed. TapeAlert is a tape drive status monitoring and messaging utility that makes it easy to detect problems which could have an impact on backup quality. From the use of worn-out tapes to defects in the drive hardware TapeAlert provides easy-to-understand warnings of errors as they arise, and suggests a course of action to remedy the problem.

To take advantage of TapeAlert, you need:

- TapeAlert-compatible tape drives
- TapeAlert-compatible backup software

Network administrators will also find it extremely valuable to have TapeAlert for OpenView, which extends the benefits of TapeAlert across the network.

how it works

TapeAlert compatible tape drives - such as the latest Ultrium drives from Hewlett-Packard - are delivered with TapeAlert features built in as standard. The internal TapeAlert firmware constantly monitors the drive hardware and the media, checking for errors and potential difficulties. Any problems identified are flagged on a new SCSI log page, where 64 bytes have been reserved for use by TapeAlert.

After a backup has been completed, the TapeAlert-compatible backup application will automatically read the drive's TapeAlert SCSI log page to check for any problems. If an error is flagged, the backup software displays a clear warning message on the user's screen, and adds the TapeAlert messages to its logs. These messages are standard across all applications that support TapeAlert, and are designed to give clear explanation of the problem and suggested resolution. For example, a user attempting to backup onto a worn-out tape would encounter the message:

WARNING: The tape cartridge has reached the end of its useful life:

1. Copy and data you need to another tape

2. Discard the old tape

Errors Monitored

TapeAlert currently checks for errors occurring in the following main categories:

- Drive recoverable read problems
- Drive recoverable write problems
- Drive unrecoverable read problems
- Drive unrecoverable write problems
- Drive hardware defects
- Worn-out media
- Expired cleaning tapes
- Wrong media used
- Abnormal error conditions

TapeAlert for OpenView

TapeAlert for OpenView allows you to bring all TapeAlert-compatible tape drives on the network under the control of the network administrator. It integrates all the features and functions of TapeAlert into HP's network management utility, OpenView for Windows. As a result, tape drives can now be monitored and controlled remotely in the same way as other network elements such as disk drives and printers.

With TapeAlert for OpenView installed, error messages flagged by tape drives are passed to the backup applications in the usual way. The software then forwards the information to the network management console through the server's SNMP interface.

An OpenView alarm is then activated on the management console, alerting the network manager to the tape drives problem. The icon for the relevant server will change colour, with the colour indicating the severity of the alarm as follows:

RED Critical

YELLOW Warning

BLUE Information

TapeAlert for OpenView also provides a graphical view of the tape drives on the selected server. Detailed configuration information is shown, together with a history of previous errors recorded.

For each alarm, TapeAlert provides a brief description of the error, together with the date and time of occurrence and an indication of severity. By clicking on the "More Info" button, it is possible to drill down to details such as the device and media involved, and suggestions for correcting the problem. For consistency and convenience, the error messages are identical to those displayed locally by TapeAlert.

As a result, it is easy for network managers to identify the source of problems occurring on any TapeAlert-enabled drive on the network.

a new standard

TapeAlert has been developed by Hewlett-Packard as a proposed new standard tape drive management. All new tape drives from Hewlett-Packard will be fully compatible with TapeAlert, and many major manufacturers and software companies are expected to adopt the standard. Software companies adopting the standard currently include:

- Computer Associates Software
- Seagate Software
- Stac
- Legato
- Novastor

HEWLETT PACKARD
Certified TapeAlert Solution

The TapeAlert standard has been designed to allow easy integration into backup applications from any software vendor. Applications which comply fully with the requirements for TapeAlert will be awarded the use of the TapeAlert logo.

Designed for the Future

TapeAlert is an advanced technological standard which provides a comprehensive range of state-of-the-art features and functions. However, it has also been designed to allow considerable expansion and development in the future, as new possibilities and opportunities open up.

summary

Reliable, high-quality backups are essential to safeguard the vast amount of data stored on computer systems today. TapeAlert is an innovative standard that enhances reliability by monitoring tape drives and associated media during backup procedures.

Offering clear warnings of problems as they arise, TapeAlert allows users and network managers to eliminate unnecessary errors and ensure that data integrity and security is never compromised. Already gaining substantial support across the industry, TapeAlert is set to become the established standard for tape drive management.

© 2000, Hewlett-Packard Company

ultrium tape drive user's guide

data protection

- index of topics
- contact hp

- home page
- before you start
- operation
- cartridge care
- cleaning
- one-button disaster recovery
- specifications
- diagnostics
- troubleshooting
- FAQs

- SCSI configuration
- UNIX configuration

- ordering supplies

troubleshooting

contents of this section

- help diagnosing the problem
  - general guidelines
- troubleshooting
  - problems with the host computer
    - computer does not boot up
    - computer boots, but does not recognize drive
  - problems with the drive and cartridge
    - tape drive does not power up
    - the application does not recognize the tape drive
  - interpreting the LEDs

related topics

- HP Library & Tape Tools
- TapeAlert
- firmware upgrades

help diagnosing the problem

If you experience problems using your tape drive after installation, use HP Library & Tape Tools to help you diagnose the problem. HP Library & Tape Tools is provided free of charge and is invaluable for solving problems with both the SCSI bus and its attached devices. It will help resolve SCSI ID numbers and also run some tests that may help you isolate problems.

You will also find troubleshooting information on the HP Support web site.

The HP Support web site contains links to:

- www.hp.com/support/ultrium takes you to HP's Customer Care web site for a wide range of up-to-date information about your product
- www.hp.com/cpso-support/guide/psd/cscinfo.htm takes you to HP's world-wide call center numbers

general guidelines

If you experience problems when using the tape drive, you need to isolate the cause of the problem. For example, if you have just installed a new SCSI host bus adapter and your system will not start, the cause of the problem is likely to be the adapter.

When installing multiple items of hardware and software, we recommend that you install each in turn and restart the system each time. Similarly if you have already installed multiple devices and software and you experience problems, remove or uninstall each in turn to establish which one is causing the problem.

Remember that the system recognizes devices during boot-up. If you swap or connect a product when your system is running, you will need to reboot the system. Rebooting the system will reset devices and will often resolve problems. It is good practice to reboot every time you add a driver or install firmware.

troubleshooting

The first step in problem-solving is establishing whether the problem lies with the cartridge, the drive, the host computer and its connections, or with the way the system is being operated. If none of the following advice helps you solve the problem, refer to our World Wide Web Customer Care pages or call for assistance.

problems with the host computer

Most modern SCSI host bus adapters locate and display attached devices when the system is booting up. If the device is not detected at this stage, there is probably a problem with the physical hardware: cables, termination, connections, power or the HBA itself. Refer to the "SCSI" topic for a detailed discussion of SCSI IDs, termination and cabling.

If your drive is found on system boot up but cannot be found in the operating system, this is more likely to be a software problem.

computer does not boot up

Possible cause	Potential solution
You have connected the tape drive to an existing SCSI bus that has other devices connected to it and the SCSI address of your HP Surestore Ultrium drive is identical to the address used by another device.	Make sure that each device on the SCSI bus has a unique ID. We recommend that the HP Surestore Ultrium tape drive is connected to a dedicated host bus adapter. Do not connect the drive to a disk RAID controller as this is not supported.
You have installed an additional SCSI host bus adapter and its resources are clashing with an existing adapter.	Remove the new host bus adapter and check the server documentation
You have disconnected the power or SCSI cable from the computer's boot disk during the drive installation process.	Check that the cables to all devices are firmly connected.

Computer boots, but does not recognize the tape drive

Possible cause	Potential solution
The power or SCSI cable is not connected properly.	Check that the cables to the tape drive are firmly connected. Ensure that the SCSI cable is LVDS-compliant and that it does not have any bent pins. Replace, if necessary. (See "Ordering Information".)
The SCSI bus is not terminated correctly.	Remove the new host bus adapter and check the server documentation
The tape drive's SCSI ID address is not unique.	Make sure that each device connected to the SCSI controller has a unique SCSI ID. Remember that 7 is normally reserved for the host bus adapter. (Windows users can run HP Library & Tape Tools to check the SCSI IDs of each device attached to the SCSI bus.)
External drives only: the tape drive may have been switched on after the computer was booted up. The computer checks for SCSI devices only at power-on.	Switch on the tape drive, then switch the computer off and then on again.

problems with the drive and cartridge

tape drive does not power up

Possible cause	Potential solution
The power cable is not connected properly.	Check that the cables to the tape drive are firmly connected. Make sure that the power cable is firmly connected. • For internal drives, try another power connector. • For external drives, the power on/off switch incorporates a green LED. If this is not on, check the power cable connection and replace the cable if necessary. You can use the power cable from your monitor or another device to check that the connection is working. If the power supply is present and all LEDs remain off, call for assistance.
The self-test fails (Ready light is off and the other LEDs are on solidly).	If there is a cartridge in the drive, remove it. Power down the drive and power it up again. If the self-test still fails, call for assistance.

the application does not recognize the tape drive

Possible cause	Potential solution
The application does not support the tape drive.	Use HP Library & Tape Tools to check that the drive is installed properly. Refer to our World Wide Web site (www.hp.com/go/connect) for details of backup applications that support the HP Surestore Ultrium tape drive. Load any service packs as necessary.
Some applications require drivers to be loaded.	Check that the correct SCSI and tape drive drivers are installed. Consult the backup application's installation notes for details.

interpreting the LEDs

The SureStore Ultrium tape drive has four LEDs (light emitting diodes) on the front panel which indicate drive status. The power switch is also illuminated when power is switched on.

The tape drive performs a power on self-test whenever power is applied or the drive is reset. The test takes about 2 seconds. The green 'Ready' light and the three orange lights for the other LEDs flash briefly and then go out. The green 'Ready' LED flashes and then remains on if self-test passes. If it fails, all the front panel LEDs will remain off.

Use the following table to interpret the LED sequences and the appropriate action to take.

Symptom	Action
Drive fails to execute power-on self-test. LEDs remain off.	Check power is being supplied to the drive. For external drives, the power on/off switch incorporates a green LED. If this is not on, check the power cable connection and replace the cable if necessary. You can use the power cable from your monitor or another device to check that the connection is working. For internal drives try another power connector. If the power supply is present and all LEDs remain off, contact the HP Customer Care Center.
The 'Use Cleaning Tape' LED is flashing	The drive requires cleaning. Load the HP Surestore Ultrium cleaning cartridge.
The 'Drive Error' LED is flashing	The drive mechanism has detected an error. Power cycle or reset the drive. If the condition clears load a new tape. If the 'Drive Error' LED remains on, contact the HP Customer Care Center.
The 'Tape Error' LED is flashing	Unload the tape cartridge. Load a new cartridge. If the 'Tape Error' LED is now off, discard the 'suspect' tape cartridge. If it is still on, contact the HP Customer Care Center.
The 'Tape Error' and 'Drive Error' LEDs are both flashing	Unload the tape cartridge. Power cycle or reset the drive. If the condition clears, load a new tape and discard the 'suspect' tape cartridge. If the error condition reappears, contact the HP Customer Care Center.
The tape is ejected immediately and the 'Tape Error' LED is flashing, or the 'Drive Error' LED flashes on unloading tape	The tape cartridge memory (CM) may be faulty. Write-protect the cartridge by sliding the red switch on the tape cartridge. The tape can be loaded and the data read. Once the data is recovered, the cartridge must be discarded.
The cleaning cartridge is ejected immediately after loading	Make sure that you are using an HP Ultrium cleaning cartridge.

© 2000, Hewlett-Packard Company

ultrium tape drive user's guide

data protection

- index of topics
- contact hp

- home page
- before you start
- operation
- cartridge care
- cleaning
- one-button disaster recovery
- specifications
- diagnostics
- troubleshooting
- FAQs

- SCSI configuration
- UNIX configuration

- ordering supplies

frequently asked questions

For further troubleshooting information, refer also to our Customer Support web site: http://www.hp.com/support/ultrium

How often should I clean the tape drive heads?

The drive has been developed to have a minimal cleaning requirement and will warn you when it needs cleaning. You should only clean the heads if the Use cleaning cartridge signal is flashing. Use only HP Ultrium cleaning cartridges to clean the heads. Refer to Cleaning for details.

What should I avoid when positioning the tape drive?

For internal drives, the server must provide forced cooling and be capable of drawing 6 cfm (0.17 cubic meters per minute or 10.08 cubic meters per hour) of air through the tape drive. Avoid blocking air vents. Ensure that empty bays have the appropriate blanking plates installed so that airflow is maintained.

For external drives, do not place the drive in a dirty environment, for example, on the floor, near a busy walkway, or near a door. Avoid locations subject to sudden temperature changes, such as near an outside door or window.

For specific environmental limits, refer to the specifications for your tape drive model.

How many times can I use an LTO cartridge?

The recommended maximum number of passes over any single part of the tape is 1,000,000. In practical terms, this is equivalent to about 2,000 backup operations.

What types of tape cartridges can I use with my drive?

Only rely on the best media to protect your valuable data. Thanks to HP's rigorous testing programs, HP Surestore Ultrium data and cleaning cartridges are the safest investment you can make.

Order online at: www.hp.com/go/storagemedia.

Important: You must use HP Surestore Ultrium cleaning cartridges with HP Surestore Ultrium tape drives, as cleaning cartridges from other media manufacturers will not be accepted by the drive.

How do I upgrade the firmware?

You can update the firmware in HP Surestore Ultrium tape drives either by downloading over the SCSI bus or by loading a firmware update tape. See Firmware Upgrades.

For how long can I archive tapes?

LTO cartridges will preserve the integrity of stored data for at least 30 years if proper storage conditions are observed. See Storing Cartridges.

© 2000, Hewlett-Packard Company

data protection

- index of topics
- contact hp
- home page
- before you start
- operation
- cartridge care
- cleaning
- one-button disaster recovery
- specifications
- diagnostics
- troubleshooting
- FAQs

SCSI configuration
- UNIX configuration
- ordering supplies

ultrium tape drive user's guide

SCSI configuration

contents of this section

- summary of SCSI terminology
- setting up the SCSI bus
  - SCSI ID numbers
    - identifying SCSI IDs
    - setting the SCSI ID
  - SCSI termination
    - termination power
    - plug and play adaptor cards
  - SCSI cables
    - cable_ length
    - cable quality
- what is SCSI?
  - the standards
- SCSI in hp surestore tape drives
- using wide and narrow devices together
- using SE and LVD, ultra and ultra 2 SCSI devices together

summary of SCSI terminology

Note: this section discusses SCSI tape drive devices in general, although specific reference is made to the particular SCSI requirements of HP Surestore Ultrium tape drives where appropriate.

Various terms are used when describing SCSI devices. This section provides a brief summary. See What is SCSI for a more detailed discussion of the different SCSI specifications.

There are three main factors that affect performance and cable length:

- The speed of the data bus, which may be Fast, Ultra or Ultra 2.
- The width of the data bus, which may be Narrow or Wide.
- The voltage level of the interface, which may be single-ended (SE) or low voltage differential (LVD).

HP Surestore Ultrium drives are Ultra2 wide SCSI devices designed to operate on a low voltage differential SCSI bus (LVDS) with a burst transfer rate of 80 MB/sec. Do not use the drive on a single ended SCSI bus as performance is restricted. Do not use on the same bus as other single-ended devices as this will switch the LVDS host adapter into single-ended mode and restrict performance.

See SCSI Cables for more information about cable lengths.

setting up the SCSI bus

Each device on a SCSI bus, including the SCSI host bus adapter (HBA), must be configured with a unique ID (identifier).

Note: HP recommends that a dedicated host bus adapter is used for the tape drive. A suitable adapter is available from HP as an accessory (see Ordering Information).

SCSI ID numbers

SCSI IDs are numbered as follows:

- For wide SCSI buses, the ID will be a number from 0 through 15, so a typical wide SCSI HBA can accommodate up to fifteen other devices.
- For standard, narrow SCSI buses, the ID will be a number from 0 through 7, so a typical narrow SCSI HBA can accommodate up to seven other devices. Do not connect HP Surestore Ultrium drives to a narrow SCSI bus.

SCSI IDs are usually set on the device itself (sometimes via configuration software), but some newer devices are capable of selecting an unused ID automatically when powered-up (these are known as "SCAM" devices). HP Surestore drives are not SCAM compliant.

SCSI ID 7 is reserved for the HBA because it has the highest priority on the bus. On wide buses, the priority runs from 7 (highest) to 0, then 15 down to 8 (lowest).

Narrow: 7 6 5 4 3 2 1 0

High ——— priority ——— Low

Wide: 7 6 5 4 3 2 1 0 15 14 13 12 11 10 9 8

identifying SCSI IDs

If your computer already has devices connected to the SCSI bus, you will need to know their IDs to avoid any conflict with the new tape drive. Here are some methods of finding out the information:

- The fastest and easiest way is to run HP Library & Tape Tools from this CD-ROM. HP Library & Tapetools will check your SCSI configuration, including the SCSI controller itself and any devices currently attached to it.
- Most computers display a list of SCSI devices and IDs during the boot-up process. This usually scrolls past very fast. If you press the [Pause] key, you should be able to halt the scrolling and view the list.
- If you have an Adaptec host adapter in the computer, it may have come with a Windows utility called SCSI Interrogator (SHOWSCSI.EXE) which displays information about connected devices.
- If you have Windows NT installed, select SCSI Adapters from the Control Panel, select a device in the Devices tab and click on Properties to view information about the device, including its SCSI ID.
- If you have Novell NetWare installed, use its LIST DEVICES command.

If none of these is available to you, try the following sources of information:

- The details of all installed devices and settings may have been written down and stored with your computer's documentation (for new computers, this is often done by the supplier).
- Your HBA's documentation should tell you which settings it uses.
- Look at each device to find out its ID. This is usually easy with external devices. With internal devices, you will probably need the help of the device's documentation to identify the SCSI ID setting, which is usually set with jumpers.

Setting the SCSI ID

- On internal HP Surestore drives, set the SCSI ID by attaching or removing jumpers at the rear of the drive.
- On external HP SureStore drives, the ID is displayed on the rear panel and can be set by pressing the little buttons above and below the number.

In either case, see the *Getting Started Guide* that came with your tape drive for more details. Note that host adapters check SCSI IDs only at power-on, so any changes will not take effect until the host system is power-cycled.

SCSI termination

Terminators are essential, as they provide the correct voltages on the SCSI bus and prevent unwanted signal reflections from interfering with data transfers. The rule is:

There must be termination at both physical ends of the bus and only at the ends.

There are two main types of termination, active and passive. Active terminators reduce interference and allow faster data throughput. On devices with high transfer speeds, such as HP Surestore Ultrium drives, active termination is required.

Correct termination can be achieved in four ways:

- **Using the host bus adapter:** Often the HBA forms one end of the SCSI bus and provides termination.

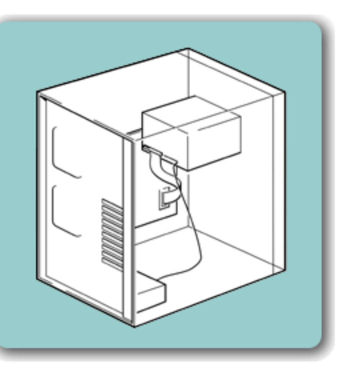

  If you have both internal and external devices attached to the same SCSI bus, the HBA will be in the middle of the cable and thus its termination must be disabled. See the host bus adapter's documentation for details of how to do this.

- **Using a terminated SCSI cable:** Usually the internal SCSI cable in a PC-based server has a number of SCSI connectors along its length and a terminator at the end farthest from the host bus adapter. In this case, you must ensure that any devices attached to the cable have termination removed or disabled.
- **Using a terminator attached to the last device on the bus:** For other external devices, the terminator simply attaches to the spare SCSI connector of the last device.
- **Using the enclosure:** For HP Surestore Ultrium external devices, the enclosure provides active termination if the drive is the last device on the SCSI chain, and no terminators are required. The LED on the rear of the drive indicates whether auto-termination is active (on) or not (off).

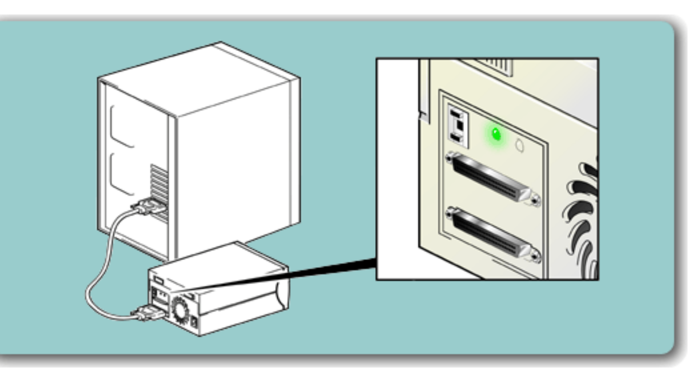

termination power

SCSI terminators require power to function, which is supplied along the SCSI cable from one or more of the connected devices. Most host adapters provide power by default, as do HP Surestore Ultrium drives.

If you are using long SCSI cables and some of the devices do **not** provide termination power, it is best to connect these to the middle of the cable, so that devices which **do** provide termination power are nearer the ends of the cable, and thus closest to the terminators themselves.

plug and play adaptor cards

Most plug-and-play adapter cards have an auto-termination feature which, when the adapter is in the middle of the bus, can detect the terminators situated at either end of the SCSI bus and automatically turn off the on-board termination.

SCSI cables

Cables matter in SCSI systems. There are two factors to consider:

cable length

- For LVD SCSI there is a maximum permissible length of 25 meters for a single device. With multiple devices the maximum combined internal/external length is 12 meters.
- For best performance, keep lengths to a minimum, but avoid very short overall lengths (less than 0.5 meters).

cable quality

It is important to use good quality cables. Generally speaking, cable quality affects performance and reliability. This is particularly true for external, shielded cables.

For HP Surestore Ultrium internal drives, you need a SCSI ribbon cable with the correct termination. The drives have a 68-pin wide, high-density SCSI connector. If you are using an HP Surestore Ultrium drive on an internal bus with other peripherals that run at Ultra2 speeds, it is important that a 68-pin LVD-compatible ribbon cable is used.

The cable provided with HP Surestore Ultrium external tape drives will attach to a computer with a wide LVDS SCSI connector (68 pins). If your server or host bus adapter is equipped with a very high density (VHD) wide SCSI connector, you will need to order a 68-pin HD-to-VHD converter or 68-pin HD-to-VHD cable. See Ordering Information.

Look after your SCSI cables. In particular, take care when connecting or disconnecting not to damage the high-density connectors. Avoid putting excessive twists in external shielded cables, as this can cause premature failure.

what is SCSI?

The Small Computer Systems Interface (SCSI) is popular because it offers a fast and flexible method of connecting a variety of devices to a host computer. The SCSI standards define both the physical connections between the devices (cables and connectors) and the protocols devices use to communicate with each other.

the standards

There have been three general standards:

- **SCSI-1**, which is now obsolete
- **SCSI-2**, which is very common, and still a current standard
- **SCSI-3**, which is an emerging set of linked standards that define much more than the simple bus systems used by the earlier versions. SCSI-3 includes Fibre Channel, Wide SCSI, FireWire (IEE 1398), Low Voltage Differential (LVD or LVDS), and Fast Serial SCSI. Some of these standards are now being used on PC platforms

Another variant is **ATAPI**, which uses an EIDE physical bus to pass SCSI protocols to connected devices. Technically, this is not part of the SCSI-3 standards, although some operating systems (notably Windows NT) manage ATAPI devices as if they were fully SCSI.

SCSI is a backward-compatible standard, so that SCSI-2 and SCSI-3 devices can almost always be made to work together.

SCSI is a ***bus*** interface: all the devices are connected to a single cable (some of this may be inside and some outside the host computer's case). The connection to the host itself is known as the Host Bus Adapter (HBA). You can have several HBAs in a single computer, each with its own SCSI bus: this is a common arrangement in high-performance servers. Some host bus adapters (such as the Adaptec 3940W) have more than one SCSI bus available on a single card.

SCSI in hp surestore tape drives

HP Surestore Ultrium drives are Ultra2 wide SCSI devices designed to operate on a low voltage differential SCSI bus (LVDS) with a burst transfer rate of 80 MB/sec.

using wide and narrow devices together

Narrow SCSI devices can transfer data one byte at-a-time (and are sometimes called "8-bit SCSI" devices). They can conform to either the SCSI-2 or SCSI-3 protocols. They have a 50-pin connection to the SCSI bus.

Wide SCSI devices can transfer two bytes of data simultaneously ("16-bit SCSI"). They usually have a single, 68-pin connection to the SCSI bus. (This physical arrangement is part of the SCSI-3 specification.) They may support either SCSI-2 or SCSI-3 protocols.

Wide and narrow devices can simultaneously be connected to the same bus without problem, provided certain rules are followed.

Do not use HP Surestore Ultrium drives on a narrow bus as this will restrict performance.

Narrow devices used on a wide bus will not normally affect the performance of any wide devices connected

using SE and LVD, ultra and ultra 2 devices together

SE and LVD define how the signals are transmitted along the cable.

With **single-ended (SE) SCSI**, each signal travels over a single wire and each signal's value is determined by comparing the signal to a paired ground wire. Signal quality tends to decrease over longer cable lengths or at increased signal speed.

With **low voltage differential (LVD) signaling**, signals travel along two wires and the difference in voltage between the wire pairs determines the signal value. This enables faster data rates and longer cabling with less susceptibility to noise than SE signaling and reduced power consumption.

Do not use HP Surestore Ultrium drives on a single-ended SCSI bus as performance is restricted. Do not use on the same bus as other single-ended devices as this will switch the LVDS host adapter into single-ended mode and restrict performance to SE speeds and SE cable length.

If you connect only LVD devices, the bus will operate in low voltage differential mode and Ultra2 speeds will be enabled. You can use a combination of Ultra and Ultra2 devices. Each device will operate at its optimum speed.

© 2000, Hewlett-Packard Company

ultrium UNIX configuration guide

data protection

- index of topics
- contact hp

- home page
- before you start
- operation
- cartridge care
- cleaning
- one-button disaster recovery
- specifications
- diagnostics
- troubleshooting
- FAQs

- SCSI configuration
- UNIX configuration
  - hp systems
  - dec systems
  - ibm RS/6000 systems
  - pc based UNIX systems
  - silicon graphics
  - sun systems
  - verify installation
  - UNIX glossary

- ordering supplies

This topic is available in English only.

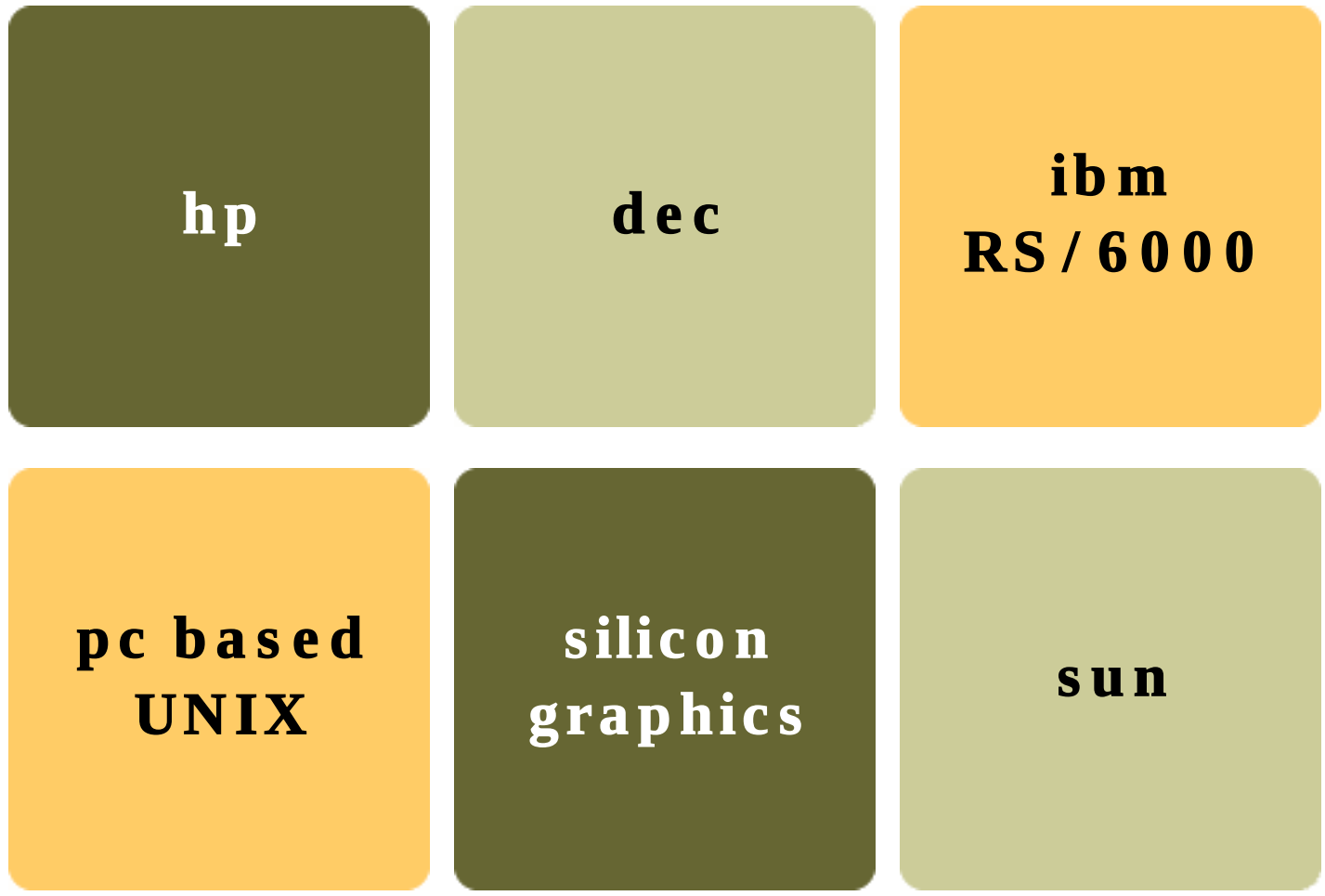

This guide provides basic information on configuring HP Surestore Ultrium tape drives with various operating systems. The table below lists the models for which this information is appropriate.

Model	Type	Capacity	Identifier String for UNIX Configuration*
HP Surestore Ultrium 230	Ultrium drives	200 GB (assuming 2:1 compression)	HP------Ultrium

***Drive Identification in UNIX Configuration:** These strings should be used in UNIX scripts wherever the drive type has to be identified. There are no hardware configuration switches.

© 2000, Hewlett-Packard Company

ultrium UNIX configuration guide

data protection

- index of topics
- contact hp

- home page
- before you start
- operation
- cartridge care
- cleaning
- one-button disaster recovery
- specifications
- diagnostics
- troubleshooting
- FAQs

- SCSI configuration
- UNIX configuration
  - hp systems
  - dec systems
  - ibm RS/6000 systems
  - pc based UNIX systems
  - silicon graphics
  - sun systems
  - verify installation
  - UNIX glossary

- ordering supplies

HP-UX systems (series 700 only)

This topic is available in English only.

contents of this section

- determining the SCSI ID
- creating the device files

related topics

- verifying installation
- glossary

determining the SCSI id

Before you configure your system to support your new HP Surestore Ultrium drive, you need to determine what SCSI ID to use. The SCSI ID must be unique for each device attached to the SCSI bus. To list the existing devices, use the following command:

% /sbin/ioscan -f

The output of this should look similar to the following example:

Class	I	H/W Path	Driver	S/W State	H/W Type	Description
bc	0		root	CLAIMED	BUS_NEXUS	
graphics	0	1	graph3	CLAIMED	INTERFACE	Graphics
ba	0	2>	bus_adapter	CLAIMED	BUS_NEXUS	Core I/O Adapter
ext_bus	0	2/0/1	c700	CLAIMED	INTERFACE	Built-in SCSI
target	2	2/0/1.4	tgt	CLAIMED	DEVICE	
disk	0	2/0/1.4.0	sdisk	CLAIMED	DEVICE	TOSHIBA CD-ROM XM-34
target	3	2/0/1.6	tgt	CLAIMED	DEVICE	
disk	1	2/0/1.6.0	sdisk	CLAIMED	DEVICE	HP C2490A
lan	0	2/0/2	lan2	CLAIMED	INTERFACE	Built-in LAN
:	:	:	:	:	:	:

After you have installed the new tape drive, you can check that it has been attached successfully. From a shell window (hpterm/xterm), execute ioscan to display the list of attached devices.

For an HP Surestore Ultrium, execute the following:

% /sbin/ioscan -f | grep "Ultrium"

The new lines should look similar to the following, where the 4 in the I field represents the instance of the SCSI tape driver, not the SCSI ID:

Class	I	H/W Path	Driver	S/W State	H/W Type	Description
tape	4	2/0/1.5.0	stape	CLAIMED	DEVICE	HP------Ultrium

creating the device files

Once you have verified the tape drive connection, you will need to create the appropriate device files for the drive. Normally, you would have rebooted your system after attaching the tape drive, and this process runs `insf`. However, if you have *not* rebooted your system since attaching the drive, you should run `insf` as follows before running `mksf` to create the device files:

```
% /sbin/insf -C tape
```

Create the device files for the devices using the `mksf` command as follows:

```
% /sbin/mksf -d stape -I <instance> [-n] [-u]
/dev/rmt/X<name>
```

where:

Argument	Description
-d stape	Specifies the SCSI tape driver
-I <instance>	Specifies the tape drive's hardware address via the instance of the SCSI tape driver. The first instance is 0, the second 1, and so on.
[-n]	Specifies no rewind; absence of this parameter indicates rewind mode
[-u]	Specifies Berkeley mode; absence of this parameter indicates AT&T mode. Berkeley and AT&T modes differ in their read-only close behavior: • In Berkeley mode, the tape position will remain unchanged by a device close operation. • In AT&T mode, a device close operation will cause the tape to be repositioned just after the next tape filemark (the start of the next file). In most cases, Berkeley mode should be used.
/dev/rmt/X<name>	Specifies the path of the device file, where: *X* Specifies the tape device identifier. Use the next available identifier. You can examine the contents of `/dev/rmt` using the `ls` command to determine which identifiers have already been used. <name> Specifies the short name (in HP-UX 9.x-style) of the device file: mnb No rewind, compression disabled, Berkeley-mode device hnb No rewind, compression enabled, Berkeley-mode device mnb No rewind, compression disabled, Berkeley-mode device hnb No rewind, compression enabled, Berkeley-mode device

See the man page (`man 1m mksf`) for other options of the `mksf` command. The `stape` section covers the SCSI tape driver options. The man page `man 7 mt` describes the long filenames used in HP-UX 10.x.

Example:

To create a device file with the following characteristics:

- A hardware address specified by instance 5 (`-I 5`)
- No rewind (`-n`)
- Berkeley mode tape positioning on close (`-u`)
- A filename of `4mnb`, where `4` is the tape device identifier (`/dev/rmt/4mnb`)

You would execute the following:

```
% /sbin/mksf -d stape -I 4 -n -u /dev/rmt/4mnb
```

You can check that the appropriate device file was created using the `lssf` command as follows:

```
% /sbin/lssf /dev/rmt/4mnb
```

This should produce the following output to show that the device file now exists:

```
  stape card instance 0 SCSI target 6 SCSI LUN 0 berkeley no
rewind
  BEST density at address 2/0/1.6.0 /dev/rmt/4mnb
```

Once the device files have been created, you should confirm that your new tape drive is working properly. See Verifying Installation.

© 2000, Hewlett-Packard Company

ultrium UNIX configuration guide

data protection

- index of topics
- contact hp

- home page
- before you start
- operation
- cartridge care
- cleaning
- one-button disaster recovery
- specifications
- diagnostics
- troubleshooting
- FAQs

- SCSI configuration
- UNIX configuration
  - hp systems
  - dec systems
  - ibm RS/6000 systems
  - pc based UNIX systems
  - silicon graphics
  - sun systems
  - verify installation
  - UNIX glossary

- ordering supplies

DEC systems, Digital UNIX 4.x

This topic is available in English only.

contents of this section

- configuring for Digital UNIX 4.x

related topics

- verifying installation
- glossary

configuring for Digital UNIX 4.x

1. Add the following entry to your `/dev/ddr.dbase` file:
```
SCSIDEVICE
Type = tape
Name = "HP      Ultrium"
```
(6 spaces between "HP" and "Ultrium")
2. Set the following parameters in the file:
```
PARAMETERS:
MaxTransferSize = 0xffffff
ReadyTimeSeconds = 0x2d
InquiryLength = 0x20
DENSITY:
DensityNumber = 0
OneFileMarkOnClose = yes
DensityCode = 0x00
Blocking = 0
CompressionCode = 0x0
Buffered = 0x1
DENSITY:
DensityNumber = 1
OneFileMarkOnClose = yes
DensityCode = 0x00
Blocking = 0
CompressionCode = 0x1
Buffered = 0x1
```
3. Rebuild the kernel by running `/sbin/ddr_config`, then reboot the system with the tape drive attached. The device files for the Ultrium drive will be generated in `/dev/rmt` when you reboot.
4. The names of the device files can be interpreted as follows:
   `[n]rmtX D`
   where:

Code	Meaning
n	No rewind
X	Instance number assigned to the drive by the operating system (0 is the first, 1 is the second, and so on)
h	Compression on (high density)
l	Compression off (low density)

For example, `/dev/rmt/nrmt0h` is a device file for the first device, which is a high-density, no-rewind device.

Once the device files have been created, you should confirm that your new tape drive is working properly. See Verifying Installation.

© 2000, Hewlett-Packard Company

ultrium UNIX configuration guide

data protection

- index of topics
- contact hp

- home page
- before you start
- operation
- cartridge care
- cleaning
- one-button disaster recovery
- specifications
- diagnostics
- troubleshooting
- FAQs

- SCSI configuration
- UNIX configuration
  - hp systems
  - dec systems
  - ibm RS/6000 systems
  - pc based UNIX systems
  - silicon graphics
  - sun systems
  - verify installation
  - UNIX glossary

- ordering supplies

IBM RS/600 systems, AIX

This topic is available in English only.

contents of this section

- determining the SCSI ID
- configuring the device files
  - device file names under AIX

related topics

- verifying installation
- glossary

determining the SCSI id

Before you configure your system to support your new HP Surestore Ultrium drive, you need to determine what SCSI ID to use. The SCSI ID must be unique for each device attached to the SCSI bus. To list the existing devices, use the following command:

% lsdev -C |grep SCSI

This will produce output that looks similar to:

scsi0 Available 00-00-0S Standard SCSI I/O Controller
hdisk0 Available 00-00-0S-0 1.0 GB SCSI Disk Drive
rmt1 Defined 00-00-0S-2,0 Other SCSI Tape Drive

The SCSI ID is in the series 00-00-0S-X,0 where X is the SCSI ID. Review the list of existing SCSI IDs and choose an available ID to assign to your new tape drive.

configuring the device files

To install the HP Surestore Ultrium drive on an IBM workstation running AIX, you will need to create the appropriate device files for the drive.

NOTE: Do *not* choose the `smit` option of "`4mm2gb`" as the Tape Device Type. This is reserved for Connor drives. If you use it with HP drives, you will get the error "`Device to be configured does not match the physical device at the specified connection location`".

To change to variable block mode, use the following procedure:

1. *If you are using a graphics terminal* running X-Windows, then at a Windows terminal, type: `smit tape`
   If you are using a non-graphics terminal, at the command line type:
   `% smit -C tape`
2. If no device has been configured at this address before, select "`add a tape drive`" to set up the address. From the pop-up window, select "`ost`" or "`Other SCSI tape drive`" as the tape drive you wish to change and choose connection addresses as appropriate.
3. Select from the window: "`change/show characteristics of a tape drive`"
4. From the pop-up window, select "`ost`" or "`Other SCSI tape drive`" as the tape drive you wish to change. Do *not* choose "`4mm2gb`".
5. Change the block size field to 0, and click on the "`DO`" button or press [Enter] to apply the change.

HP Ultrium drives will work with `tar`, `cpio`, `backup`, `restore` and `dd`. For systems other than the 43P, the drive is also boot-capable, provided a boot tape is generated using `mkszfile` and `mksysb`.

Once the device files have been created, you should confirm that your new tape drive is working properly. See Verifying Installation.

device file names under AIX

Use device filenames as listed below for the combination of Rewind on Close, Retension on Open, and Compression that you want:

Filename	Rewind on Close	Retension on Open	Compression
/dev/rmt*n*	Yes	No	enabled
/dev/rmt*n*.1	No	No	enabled
/dev/rmt*n*.2	Yes	Yes	enabled
/dev/rmt*n*.3	No	Yes	enabled
/dev/rmt*n*.4	Yes	No	disabled
/dev/rmt*n*.5	No	No	disabled
/dev/rmt*n*.6	Yes	Yes	disabled
/dev/rmt*n*.7	No	Yes	disabled

The *n* in the filename is the instance number assigned to the drive by the operating system, where 0 is the first device, 1 is the second and so on.

Rewind on Close Normally, the drive repositions the tape to BOT (Beginning of Tape) when the device file is closed. Using the no rewind option is useful when creating and reading tapes that contain multiple files.

Retension on Open Retensioning consists of winding to EOT (End of Tape) and then rewinding to BOT, in order to reduce errors. If this option is selected, the tape is positioned at BOT as part of the open process. Ultrium drives do not require retensioning, so you should not use device fields that send retensioning commands.

Compression Compression can be disabled or enabled.

© 2000, Hewlett-Packard Company

ultrium UNIX configuration guide

data protection

- index of topics
- contact hp

- home page
- before you start
- operation
- cartridge care
- cleaning
- one-button disaster recovery
- specifications
- diagnostics
- troubleshooting
- FAQs

- SCSI configuration
- UNIX configuration
  - hp systems
  - dec systems
  - ibm RS/6000 systems
  - pc based UNIX systems
  - silicon graphics
  - sun systems
  - verify installation
  - UNIX glossary

- ordering supplies

PC-based UNIX, SCO and Linux

This topic is available in English only.

contents of this section

- determining the SCSI ID (Linux)
- configuring for an SCO system
- configuring for a Linux system

related topics

- verifying installation
- glossary

determining the SCSI id (Linux)

Look at the output of dmesg to find out what SCSI channel number is used for each connection.

To find out the SCSI IDs in use on each channel:

run cat /proc/scsi/scsi

This will produce output similar to the following for each device:

Attached devices:
Host: SCSI0 Channel:00 Id:00 Lun:00
Vendor: HP Model ----------
Type: Direct-Access ANSI SCSI Revision 02

Look at the Id information to establish which Ids are in use.

configuring for an SCO system

To install the appropriate driver and device files on a SCO system, perform the following steps:

1. Run '`mkdev tape`' as root.
2. Select '`Configure SCSI tape drive`'.
3. Select '`Install tape drive`'.
4. Select the appropriate SCSI adapter.
5. Select the appropriate SCSI bus.
6. Select the Target ID to match the SCSI ID set on the back of the drive.
7. Select the LUN to be 0.
8. Enter 'y' to update the SCSI configuration.
9. Enter the following details:

Vendor identification string:	HP
SCSI version to which the drive conforms:	2
Response Data Format (SCSI-2):	2
Generic device:	1

   This procedure will automatically make the drive the default device, even if another device is already configured.
   You may want to edit `/etc/conf/pack.c/stp/space.c` to change the filemark handling on close. By default, it writes only one filemark for a write filemark `ioctl()`. See the comments in the `space.c` file.
10. Enter 'q' to leave unchanged the boot string that is displayed when the system is rebooted.
11. Enter 'q' to return to the Main Menu.
12. Enter 'q' to quit.
13. You are now prompted to rebuild the kernel and the kernel environment (which includes the device files). Perform both steps by answering 'y' when prompted, and select the new kernel to be booted by default.
    You can now use one of the following files, as appropriate, for backup operations:

    /dev/nrStp*X* if you require a no-rewind device
    /dev/rStp*X* if you require a rewind device
    where *X* is the instance number as assigned to the drive by the operating system (0 is the first device, 1 is the second, and so on).

controlling compression with SCO

Because SCO does not have any compression/no-compression device files, you must use '`tape setcomp`' to control the compression status of the drive as follows:

Command	Compression	Decompression
tape -a 0 setcomp	disabled	disabled
tape -a 1 setcomp	enabled	disabled
tape -a 2 setcomp	disabled	enabled
tape -a 3 setcomp	enabled	enabled

If you have multiple drives, you must specify the appropriate device files in the command. For example:

```
% tape -a 0 setcomp /dev/nrStp2
```

Use '`tape getcomp`' to tell you the current status of the drive.

NOTE: Do *not* use the SCO '`mt`' utility. This is obsolete, and does not perform the same function as '`mt`' on other platforms. Use '`tape`' to achieve the same result.

improving performance through block size on SCO

In order to improve performance, specify larger blocking factors for `cpio` and `tar`. Use the 'b' option of `tar` with an argument of 20 or use the 'B' option of `cpio`. For example:

```
% tar cvbf 20 /dev/rStpY ./*
```

or

```
% find / -print | cpio -ocB > /dev/rStpY
```

or, if you have a version of SCO UNIX earlier than 5.x:

```
% find / -print | cpio -ocB > /dev/rStpY
```

In each case, *Y* is the instance number as assigned to the drive by the operating system (0 is the first device, 1 is the second, and so on).

Alternatively, you can use the `tape` command as follows:

```
% tape -a 32768 setblk <device file>
```

This explicitly sets the block size used for the drive when you are using built-in applications such as `cpio` and `tar`. The `<device file>` is either `/dev/nrStpY` or `/dev/rStpY` as described above.

configuring for Linux systems

No changes are needed to support Ultrium on Linux platforms, however you should ensure that you have the relevant drivers loaded.

To see the device drivers loaded currently, execute an `lsmod` command, this will give output like:

```
Module Size Used by
sgm 4376 1
ide-scsi 7200 0
lockd 30792 1
sunrpc 53316 1
st 24656 0
ncr53c8xx 52096 1
aic7xxx 136184 2
```

The lines of interest here are:

st	This is the tape driver. Its presence in the output of the lsmod command shows that the tape driver is loaded.
ncr53c8xx	This is a SCSI chipset driver for the LSI Logic family of HBAs (amongst others).
aix7xxx	This is a SCSI chipset driver for the Adaptec 7xxx chipset family (such as Adaptec 2940UW).

In order to communicate with a tape device, the operating system needs to have drivers for the tape and the underlying transport mechanism (the host bus adaptor) loaded. Ensure that both are available as either loadable modules (for example, usable with `insmod` and visible with `lsmod`) or are statically built into your kernel.

In order to determine if the drive has been detected by the tape driver at module load time, execute:

```
dmesg | grep "st"
```

This should find a number of lines. One should look like:

```
Detected SCSI tape st0 at scsi1, channel 0, id 5, lun 0
```

To load the tape driver module if it is not loaded as above, execute:

```
insmod st
```

to load it. This should happen naturally if your system is rebooted after attaching the drive.

In order to enable large transfers under Linux (>64 KB per write), edit the file `/usr/src/linux/drivers/scsi/st_options.h` and change the definition of `ST_BUFFER_BLOCKS`.

If you want requests to space to end of data to be faster, you should also enable `ST_FAST_MTEOM` in the same file. After changing this file, rebuild the modules and install the new binary. At the very least, this requires:

```
make modules
make modules_install
```

from the `/usr/src/linux` directory. See your kernel documentation.

© 2000, Hewlett-Packard Company

ultrium UNIX configuration guide

data protection

- index of topics
- contact hp

- home page
- before you start
- operation
- cartridge care
- cleaning
- one-button disaster recovery
- specifications
- diagnostics
- troubleshooting
- FAQs

- SCSI configuration
- UNIX configuration
  - hp systems
  - dec systems
  - ibm RS/6000 systems
  - pc based UNIX systems
  - silicon graphics
  - sun systems
  - verify installation
  - UNIX glossary

- ordering supplies

Silicon Graphics systems, IRIX

This topic is available in English only.

contents of this section

- determining the SCSI ID
- configuring the device files
- MTCAN and constants values

related topics

- verifying installation
- glossary

determining the SCSI id

Before you configure your system to support your new HP Surestore Ultrium drive, you need to determine what SCSI ID to use. The SCSI ID must be unique for each device attached to the SCSI bus. To list the existing devices, use the following command:

% hinv -v | grep SCSI

This will produce output similar to the following:

Integral SCSI controller 0: Version WD33C93B, revision D
Disk drive: unit 1 in SCSI controller 0

In this, "unit X" indicates the SCSI ID. Review the list of existing SCSI IDs and choose an available ID to assign to your new tape drive.

configuring the device files

To install the HP Surestore Ultrium drive on a Silicon Graphics system running IRIX, you will need to modify the kernel configuration file.

- If you want `tar` to default to short block transfers, change the `512*512` in your `tpsc` or `scsi` HP entry to `128*512` (128-kilobyte blocks) or, better still, `64*512` (64-kilobyte blocks).

1. Select the name of the kernel configuration file for your version of IRIX from the list below and open it with a text editor:
   - For IRIX 6.2 and later: `/var/sysgen/master.d/scsi`
2. Find the following entry in the kernel configuration file and copy it to a new location in the file where you can edit it as appropriate for your tape drive:

For IRIX 6.2:

```
{DATTAPE, TPDAT,2,7,"HP","Ultrium",0,0,{0},
MTCAN_BSF|MTCAN_BSR|MTCAN_APPEND|MTCAN_SETMK|MTCAN_PART|
MTCAN_PREV|MTCAN_SYNC|MTCAN_SPEOD|MTCAN_CHKRDY|MTCAN_VAR|
MTCAN_SETSZ|MTCAN_SILI|MTCAN_SEEK|MTCAN_CMTYPEANY|MTCAN_COMPRESS,
/*minimum delay to I/O is 4 minutes, because when a retry is
*performed, the drive retries a number of times, and then
*rewinds to BOT, repositions, and tries again.*/
40, 4*60, 20*60, 5*60, 512, 64*512, 0, (u_char*)0 },
```

For IRIX 6.4/6.5:

```
{ DATTAPE, TPDAT, 2, 7, "HP", "Ultrium", 0, 0, {0},
MTCAN_BSF|MTCAN_BSR|MTCAN_APPEND|MTCAN_SETMK|MTCAN_PART|
MTCAN_PREV|MTCAN_SYNC|MTCAN_SPEOD|MTCAN_CHKRDY|MTCAN_VAR|
MTCAN_SETSZ|MTCAN_SILI|MTCAN_SEEK|MTCAN_CHTYPEANY,
/* minimum delay on i/o is 4 minutes, because when a retry is
* performed, the drive retries a number of times, and then
* rewinds to BOT, repositions, and tries again. */
40, 4*60, 4*60, 5*60, 3*3600, 512, 512*512,
tpsc_default_dens_count, tpsc_default_hwg_dens_names,
tpsc_default_alias_dens_names,
{0}, 0, 0, 0,
0, (u_char *)0 },
```

For an explanation of the functions of the `MTCAN` values and constants, see "MTCAN and Constants Values".

3. Recompile the kernel by running `autoconfig` and then reboot the system. When you reboot, the device files for the Ultrium drive will be created automatically.

The following device files will be created in `/dev/rmt`:

```
tps0d3          tps0d3cnrv   tps0d3nrns    tps0d3s
tps0d3c         tps0d3cns    tps0d3nrnsv   tps0d3sv
tps0d3cnr       tps0d3cnsv   tps0d3nrs     tps0d3v
tps0d3cnrns     tps0d3cs     tps0d3nrsv    tps0d3stat
tps0d3cnrnsv    tps0d3csv    tps0d3nrv
tps0d3cnrs      tps0d3cv     tps0d3ns
tps0d3cnrsv     tps0d3nr     tps0d3nsv
```

These device file names can be interpreted as follows:

Device Name	Function
c	Compression
nr	No rewind on close
v	Device supports variable block sizes
ns	Device does not byte-swap
s	Device does byte-swap
stat	Allows the device to be used when one of the other device files specifying the same physical device is already opened

For example, the device file `tps0d3` indicates a device on controller card 0 at SCSI ID 3, and the device file `tps0d3nrv` indicates a device on controller card 0 at SCSI ID 3 that does not rewind on close and supports variable block sizes.

Once the device files have been created, you should confirm that your new tape drive is working properly. See Verifying Installation.

MTCAN and constants values

The `MTCAN` values have the following functions:

MTCAN value	Capability Enabled
APPEND	Append to existing tape data
BSF	Backspace file
BSR	Backspace record
CHKRDY	Determine if a tape cartridge is present
CHTYPEANY	Change density and/or fixed to variable at points other than beginning of tape
COMPRESS	Compression
PART	Multiple partitions
PREV	Prevent media removal
SEEK	Seek to a particular block
SETMK	Setmarks
SETSZ	Fixed block size can be set
SILI	Suppress illegal length indicators
SPEOD	Space to EOD (end of data)
SYNC	Synchronous mode SCSI
VAR	Variable block sizes

The constants have the following functions:

Constant	Description
40	Transfer time-out in "inverse ticks"
4*60	Minimum time-out in seconds for any command
4*60	Space command time-out in seconds
5*60	Time-out in seconds for long operations (such as rewinds)
512	Default block size in bytes for fixed block size mode
`64*512` or `512*512`	Recommended blocking factor in bytes for the upper limit of read/write commands

© 2000, Hewlett-Packard Company

ultrium UNIX configuration guide

data protection

- index of topics
- contact hp

- home page
- before you start
- operation
- cartridge care
- cleaning
- one-button disaster recovery
- specifications
- diagnostics
- troubleshooting
- FAQs

- SCSI configuration
- UNIX configuration
  - hp systems
  - dec systems
  - ibm RS/6000 systems
  - pc based UNIX systems
  - silicon graphics sun systems
  - verify installation
  - UNIX glossary

- ordering supplies

Sun systems, Solaris 2 (SunOS 5.x)

This topic is available in English only.

contents of this section

- determining the SCSI ID
- configuring the device files
- hp-data values

related topics

- verifying installation
- glossary

determining the SCSI id

Before you configure your system to support your new HP SureStore DLT drive, you need to determine what SCSI ID to use. The SCSI ID must be unique for each device attached to the SCSI bus.

1. Check for existing SCSI controllers using the following command:
   % modinfo | grep "SCSI Host"

   This will produce output similar to the following:

   18 501a4000 c3b8 61 1 esp (ESP SCSI Host Bus Adapter Drive)
   21 501c8000 9e70 6 1 fas (FAS SCSI Host Bus Adapter Drive)

   This indicates that there are two SCSI controllers on the system, an ESP-based adapter and a FAS-based adapter. For the adapter to which the new tape drive is attached, you will need to determine what SCSI IDs are already used.

2. Determine the SCSI IDs of the existing devices attached to the SCSI controller:

   For all adapters:
   % dmesg | egrep ".*xxx.*target" | sort | uniq

   where xxx = the type of adapter (esp, glm, fas or isp), as appropriate.

   For example, for an ESP-based adapter:
   % dmesg | egrep ".*esp.*target" | sort | uniq

   This produces a list similar to:
   sd0 at esp0: target 0 lun 0 sd6 at esp0: target 6 lun 0

   This indicates that SCSI IDs 0 and 6 are used for existing devices. SCSI ID 7 is generally used for the adapter itself. In this situation, you would use a SCSI ID from 1 to 5 for the new tape drive.

configuring the device files

Only if necessary, make the following file modifications to enhance performance:

1. In the file `/kernel/drv/st.conf`, after these lines:
   ```
   ########
   # Copyright (c) 1992, by Sun Microsystems, Inc.
   #ident "@(#)st.conf 1.6 93/05/03 SMI"
   ```
   add the following (there are 6 significant spaces between `HP` and `Ultrium` in line 2):
   ```
   tape-config-list =
       "HP Ultrium", "HP Ultrium", "ULTRIUM",
   ULTRIUM = 1,0x36,0,0xd639,4,0x00,0x00,0x00,0x40,3;

   name="st" class="scsi"
           target=X lun=0;
   ```
   where *X* is the SCSI target address of the device you have attached.

2. If you are replacing an existing tape device on the same SCSI ID, remove the contents of the `/dev/rmt` directory as follows:
   ```
   % cd /dev/rmt
   % rm *
   ```
3. Do a reconfigure boot:
   ```
   % cd /
   % touch /reconfigure
   % sync;halt
   ```
4. When the system is down, reboot:
   ```
   % boot -r
   ```
   Make sure you include the `-r` switch, so that the device directory is reconfigured using the new data.
5. You should now be able to use the drive:

   - Use `/dev/rmt/Xcb` if you require a compression rewind device file, where *X* is the relevant device address.
   - Use `/dev/rmt/Xcbn` when you require a compression non-rewind device.

Once the device files have been created, you should confirm that your new tape drive is working properly. See Verifying Installation.

hp-data values

The values for `ULTRIUM` and `name`, which provide normal LTO mode, have the following meanings:

Value	Meaning
1	This value should be 1.
0x36	Value for an Ultrium drive in `/usr/include/sys/mtio.h`.
1024	Default block size. For variable block size, use 0 instead of 1024 (except with Solaris 2.3, where you should not use 0).
`0x639` or `0xd639`	A value is derived from constants provided in `/usr/include/sys/scsi/targets/stdef.h`. The value determines which operations the driver can perform with the attached device by using a unique value for each feature and then adding them together to form `0x639`. The features are as follows: 0x001 Device supports variable length records. 0x008 Device can backspace over files (as in the '`mt bsf`' option). 0x010 Device supports backspace record (as in '`mt bsr`'). 0x020 Device requires a long time-out period for erase functions. 0x0200 Device knows when end of data has been reached. 0x0400 Device driver is unloadable. 0x1000 Time-outs five times longer than normal. 0x4000 Driver buffers write requests and pre-acknowledges success to application. 0x8000 Variable record size not limited to 64 KB.
0x00	Default density setting. Creates a device file with compression disabled.
0x40	The density code for data compression enabled by default.
target=X	X specifies the SCSI ID (target) of the device.
lun=0	Specifies the LUN for the device.

© 2000, Hewlett-Packard Company

ultrium UNIX configuration guide

data protection

- index of topics
- contact hp

- home page
- before you start
- operation
- cartridge care
- cleaning
- one-button disaster recovery
- specifications
- diagnostics
- troubleshooting
- FAQs

- SCSI configuration
- UNIX configuration
  - hp systems
  - dec systems
  - ibm RS/6000 systems
  - pc based UNIX systems
  - silicon graphics
  - sun systems
  - verify installation
  - UNIX glossary

- ordering supplies

verify the installation

This topic is available in English only.

contents of this section

- overview
- verifying the installation
  - example
- system-specific arguments
- glossary

overview

As part of the installation process, you will have installed the appropriate device driver for your UNIX system and created device files to communicate with the tape drive. This section describes how you can verify that the installation has been performed correctly.

In outline, the procedure is as follows:

1. Write test data to a tape.
2. Read the test data from the tape.
3. Compare the data read from the tape with the original data on disk.

verifying the installation

1. Test the SCSI connection to the tape drive by doing a rewind operation:
   - **a** If there is a tape cartridge already in the drive, remove it.
   - **b** Insert a tape cartridge.
   - **c** Rewind the tape using the command line:
     `% mt -t <archive name> rewind`
     or for SCO UNIX:
     `% tape -a /dev/rStpX rewind`
     If you do not see the Tape light flash as the tape rewinds, the hardware installation may be faulty. Check the troubleshooting section of the User's Guide for help in identifying the problem.

2. Write a sample file to tape, using '`tar`':
   ```
   % cd /
   % tar cvf <archive name> <file>
   ```
   The options to `tar` have the following meanings:

c	Create a new archive (backup file) on the device.
v	Operate in verbose mode.
f	Specify the archive name explicitly.

   The arguments follow the `cvf` options in the command line. Their values depend on the operating system; suggested values are given in "System-Specific Arguments". The arguments are as follows:

<archive name>	The name of the archive name to be created. *Example:* `/dev/rmt/0m`
<file>	The name of the file to archive, prefixed with '`./`'. *Example:* `./stand/vmunix`

NOTE Make sure you prefix the file name with '`.`' when you back it up to tape. If you do not, the restore operation in step 3 will overwrite the original copy on disk.

3. Read the file back from tape:
   ```
   % cd /tmp
   % tar xvf <archive name>
   ```
   The '`x`' option to `tar` here means "extract from the archive".
   Use the same value for the `<archive name>` argument as in step 2.
4. Compare the original with this retrieved file:
   `% cmp <original file> /tmp/<retrieved file>`
   This step compares the retrieved file and the original file byte by byte. If they are the same, there should be no output, and this verifies that the installation is correct. The arguments are as follows:

<original file>	The name of the original file, prefixed with '`/`'. *Example:* `/stand/vmunix`
<retrieved file>	The name of the file retrieved from the archive. *Example:* `stand/vmunix`

example

Suppose you are verifying the installation of an HP Ultrium tape drive on an HP-UX 10.X system. The procedure would be as follows. See "System-Specific Arguments" below for the choice of `<archive name>` and `<file>` arguments:

1. Change directory to root:
   `% cd /`
2. Back up `/stand/vmunix` to tape:
   `% tar cvf /dev/rmt/0m ./stand/vmunix`
   Note the prefix of '.' to the filename.
3. Change to the temporary directory:
   `% cd /tmp`
4. Extract the file from the tape:
   `% tar xvf /dev/rmt/0m`
5. Compare the original with the restored version:
   `% cmp /stand/vmunix /tmp/stand/vmunix`
   Note that the original filename is *not* prefixed with '.'.

system-specific arguments

The following table lists suggested values for the arguments `<archive name>` and `<file>` in the verification procedure described above. If any of the suggested files are symbolic links on your system, choose another file appropriate for your system.

System	File Name	Description	Archive Name	Notes
DEC OSF	vmunix	OSF kernel	/dev/rmt/*Y*m	*Y* is the instance of the drive
HP-UX 10.x	stand/vmunix	HP-UX kernel	/dev/rmt/*Y*m	*Y* is the instance of the drive
IBM AIX	unix	AIX kernel	/dev/rmt*Y*.1	*Y* is the device ID reported back as available when you ran '`smit -C tape`' to create the device files.
SCO	unix	SCO kernel	/dev/rStp*Y*	Use the device file created during the running of '`mkdev tape`', where *Y* is the instance of the tape drive.
Silicon Graphics IRIX	unix	IRIX kernel	/dev/rmt/tps*C*d*X*	*C* is the SCSI card *X* is the SCSI ID of the drive
SUN Solaris 2 (SunOS 5.x)	bin/csh	C shell	Determine the archive name as described below*.	
Linux	bin/sh	Bourne shell	/dev/stp	

*For SUN Solaris 2, determine the archive name by typing:
`% ls -l /dev/rmt/*m | grep "st@X"`
where *X* is the SCSI ID. Identify the line for the tape drive. For example, if the drive was at SCSI ID 2, look for the line containing "`st@2,0`". This might be as follows (but on a single line):
```
lrwxrwxrwx 1 root root 63 Mar 1 00:00 /dev/rmt/0m
../../devices/sbus@1f,0/espdma@e,8400000/esp@e,8800000/st@2,0:m
```

Here you could use `/dev/rmt/0m` (shown underlined above) as the archive name.

© 2000, Hewlett-Packard Company

ultrium UNIX configuration guide

data protection

- index of topics
- contact hp

- home page
- before you start
- operation
- cartridge care
- cleaning
- one-button disaster recovery
- specifications
- diagnostics
- troubleshooting
- FAQs

- SCSI configuration
- UNIX configuration
  - hp systems
  - dec systems
  - ibm RS/6000 systems
  - pc based UNIX systems
  - silicon graphics
  - sun systems
  - verify installation
  - UNIX glossary

- ordering supplies

glossary

This topic is available in English only.

AT&T mode

Berkeley and AT&T functional modes differ in "read only" close functionality. In AT&T mode, a device close operation will cause the tape to be repositioned just after next tape filemark (the start of the next file).

Berkeley mode

Berkeley and AT&T functional modes differ in "read only" close functionality. In Berkeley mode the tape position will remain unchanged by a device close operation.

Compression

A procedure in which data is transformed by the removal of redundant information to reduce the number of bits required to represent the data. This is done by substituting short codewords for strings of bytes.

Filemark

A mark written by the host to the tape, which can be searched for, often using the drive's fast-search capability. It does not necessarily separate files. It is up to the host to assign a meaning to the mark.

Immediate mode

A mode of responding to SCSI commands where the drive or other peripheral does not wait until the command has finished before returning status information back to the host. When writing filemarks, Immediate mode can significantly improve the performance of systems which do not set the Immediate bit when sending a SCSI WRITE FILEMARKS command. On the other hand, data is not flushed to tape in response to a filemark command.

Infinite flush

By default, the buffer in the drive is flushed every 5 seconds. Infinite flush avoids frequent starting and stopping of the mechanism when using a very slow application. It also avoids losing capacity through the flushing of partly written groups. On the other hand, infinite flush means that data can remain in the buffer for very long periods of time, and could be lost in the event of a power failure.

LUN

Logical Unit Number. A unique number by which a device is identified on the SCSI bus. A tape drive has a fixed LUN of 0. In an autoloader, the changer mechanism is LUN1.

© 2000, Hewlett-Packard Company

ultrium tape drive user's guide

data protection

- index of topics
- contact hp

- home page
- before you start
- operation
- cartridge care
- cleaning
- one-button disaster recovery
- specifications
- diagnostics
- troubleshooting
- FAQs

- SCSI configuration
- UNIX configuration

ordering supplies

ordering supplies

contents of this section

- cables
- adapters
- rail kits
- media

SCSI cables

Item	Description	Part Number
1.0 m internal	2 connector, 68-way, terminated, LVD/SE Ultra2 quality conductor	C7491A
0.9 m external	68-pin high density to 68-pin high density, LVD/SE Ultra2 quality conductor	C5741A
1.5 m external	68-pin high density to 68-pin high density, LVD/SE Ultra2 quality conductor	C5742A
2.5 m external	68-pin high density to 68-pin high density, LVD/SE Ultra2 quality conductor	C5743A
1.5 m external	68-pin very high-density (VHD) to 68-pin high-density LVD/SE Ultra2 quality conductor	C7482A

adapters

Item	Description	Part Number
High-End Tape Connect Kit	Ultra2 host bus adapter kit for internal and external drives	C7474A

rail kits

Item	Description	Part Number
rail kit	for Compaq servers	C7469A
rail kit	for HP Netserver	C7391-60002

media

Item	Description	Part Number
data cartridge	LTO 100 GB native	C7971-60000
cleaning cartridge	LTO	C7979-60000

© 2000, Hewlett-Packard Company