METAL CONNECTOR

Net weight: 26 gr.

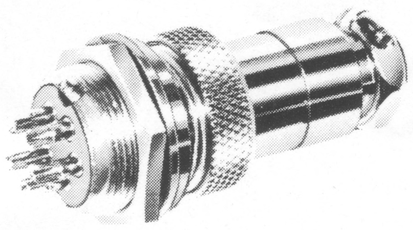

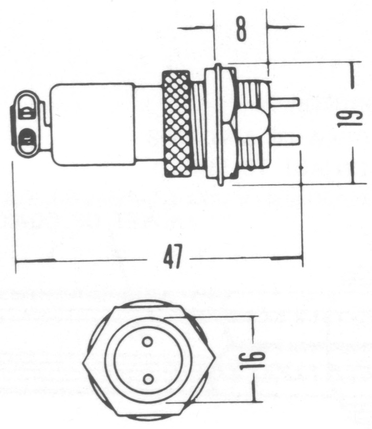

	PLUG	SOCKET
MI-719 2P		
MI-720 3P		
MI-721 4P		
MI-747 5P		
MI-748 6P		
MI-752 7P		
MI-753 8P		

RIGHT ANGLE MENTAL CONNECTOR

Net weight: 30 gr.

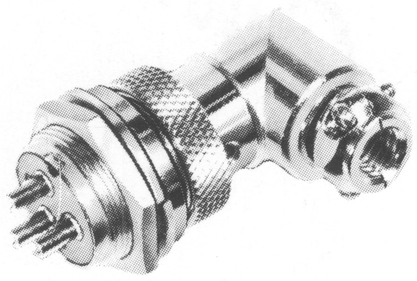

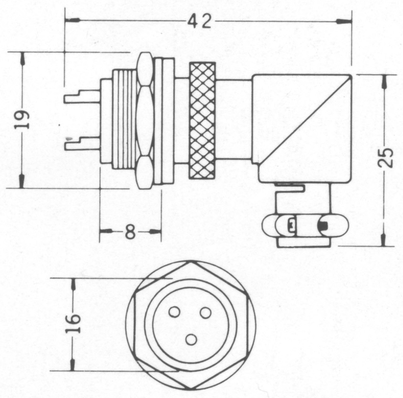

	PLUG	SOCKET
MI-719L 2P		
MI-720L 3P		
MI-721L 4P		
MI-747L 5P		
MI-748L 6P		
MI-752L 7P		
MI-753L 8P		

No. MI-740

2P METAL INLINE CONNECTOR
Net Weight: 42.5 gr.

No. MI-742

4P METAL INLINE CONNECTOR
Net Weight: 42.5 gr.

No. MI-741

3P METAL INLINE CONNECTOR
Net Weight: 42.5 gr.

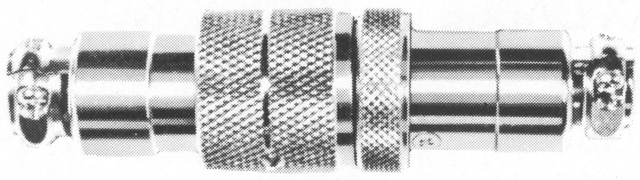

No. MI-744N

METAL CONNECTOR 10P

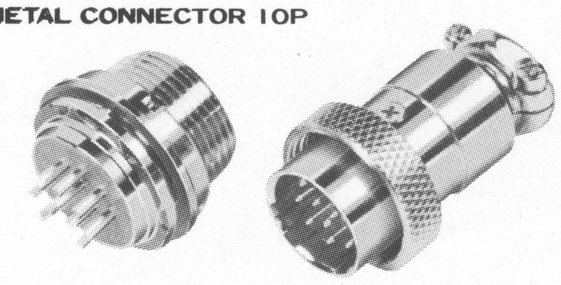

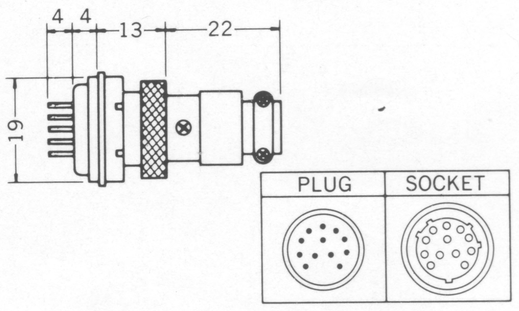

No. MRC-30P

3P MALE CONNECTOR
Net Weight: 48 gr.

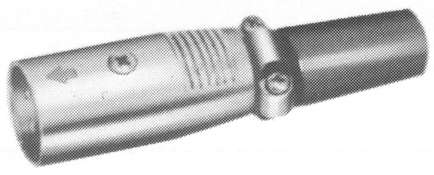

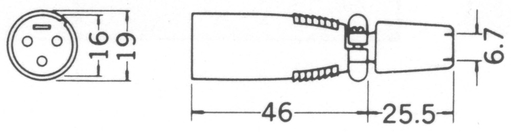

No. MRC-32P

3P PANEL MOUNT MALE JACK ACK
Net Weight: 40 gr.

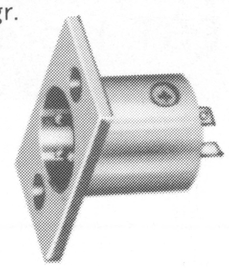

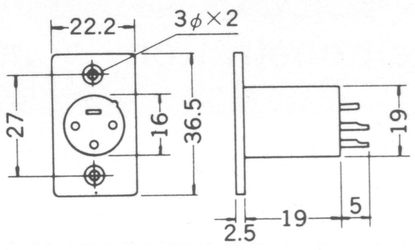

No. MRC-31J

3P FEMALE CONECTOR
Net Weight: 25 gr.

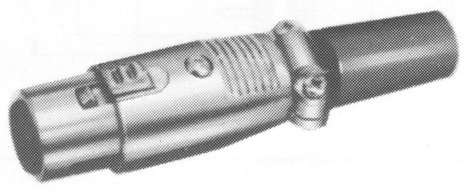

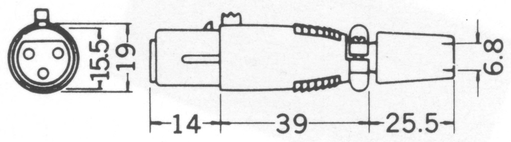

No. MRC-33J

3P PANEL MOUNT FEMALE JACK
Net Weight: 42 gr.

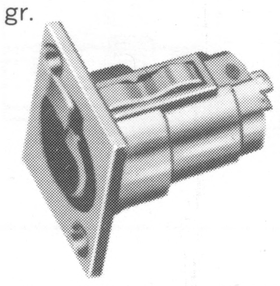

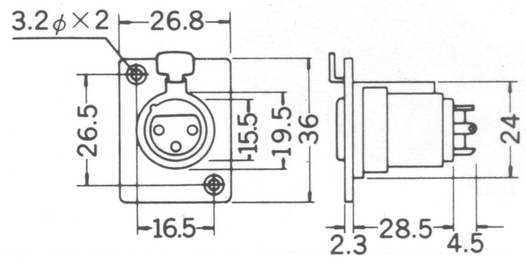

No. MRS-670

SCART(RGB)PLUG
Net Weight: 22 gr.

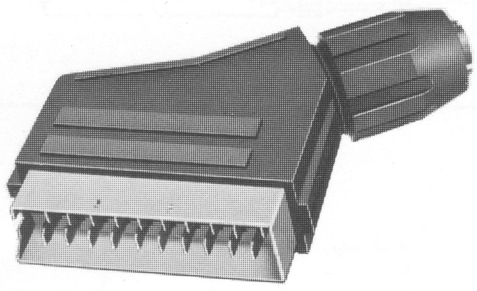

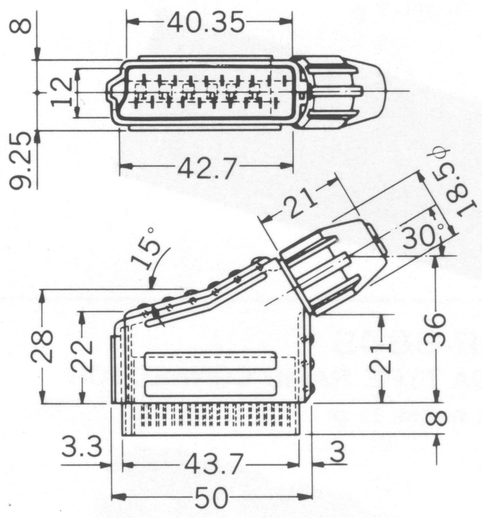

No. MP-05B

5P DIN METAL PLUG (240°) WITH LOCKING RING
Net Weight: 23 gr.

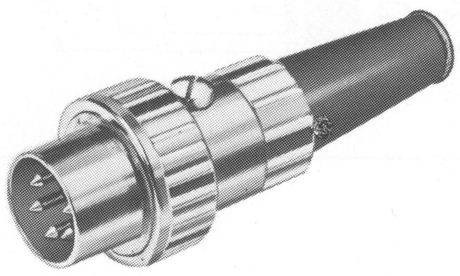

MP-05B	5P	

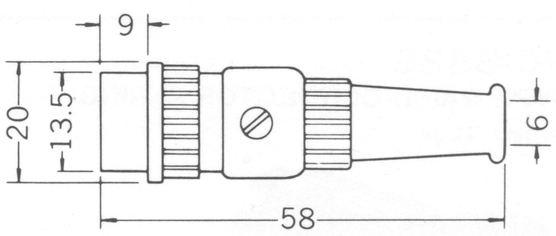

No. MRS-670C

CRIMP TERMINALS FOR SCART PLUG

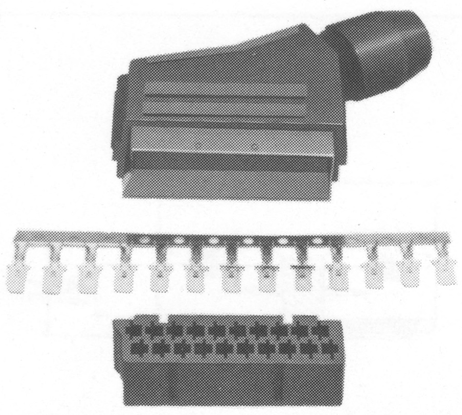

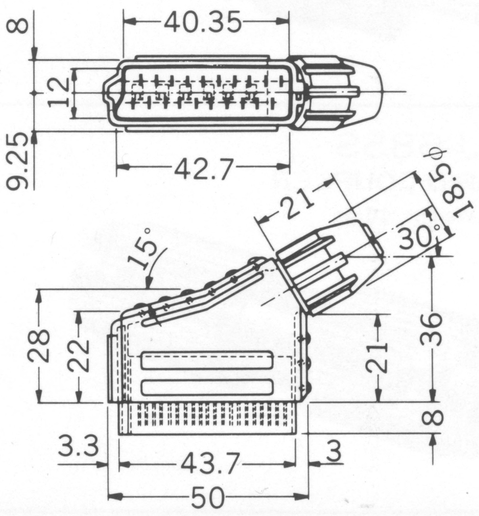

No. MJ-05B

5P DIN JACK (240°)
Net Weight: 18 gr.

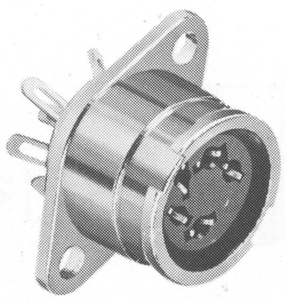
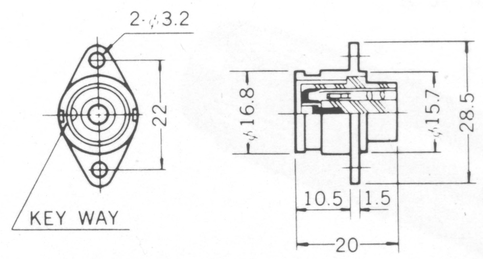
MJ-05B	5P