The product information in this catalog is for reference only. Please request the Engineering Drawing for the most current and accurate design information.
All non-RoHS products have been discontinued, or will be discontinued soon. Please check the products status on the Hirose website RoHS search at www.hirose-connectors.com, or contact your Hirose sales representative.

SUMICON 1600 SERIES RECTANGULAR CONNECTORS

The SUMICON 1600 series are multi-contact connectors designed by Hirose. 8, 12, 16, 20, 24, 28, 34, 45 and 60-contact models available (same as the 1300 series). The connector units are available in three types: soldering, wrapping, and crimping. Accessories are C case, CA case, CBA case, ST stopper, STA stopper, and STB stopper, By combining the many options noted above, the SUMICON 1600 series connectors meet a wide variety applications.

Standard Type

General

In the SUMICON 1600 series, the connector unit is completely separated from the accessories such as the cases and stoppers to diversify the specificaions and facilitate wiring connection. The SUMICON 1600 series are specified in the NTT specifications No.1931.

Electrical Characteristics

Item	Standard
Contact Resistance	7mΩ max. at DC 1A
Insulation Resistance	1000MΩ min. at DC 500V
Withstand Voltage	AC 1000V for 1 minute
Current Rating	3A
Voltage Rating	300V AC

Material and Finish

Part	Material	Finish
Insulator	Glass filled diallylphthalate resin	Blue
Male Terminal	Brass	Type A: Silver-plated Type G: Gold-plated
Female Terminal	Phosphor bronze	
Plug Case	ABS resin (black)	NTT spec: ABS resin, 2.5PB 6.0/2.0 (color)
Stopper Bracket	Steel	Nickel plating

Wire Wrapping Specifications

Applicable wire	AWG	26	28	30
	Applicable wire (mm)	0.41	0.32	0.26
	Max. coating O.D. (mm)	0.95	0.75	0.6
Wrapping method		Ordinary wrapping	Coating one wrap	Coating one wrap
Effective number of wrappings		about 8	about 8	about 9
Number of wrappings per terminal		2 wrap		

Ordering Information

P W – 16 34 □ A – C □ ( )

(1) (2) (3) (4) (5) (6) (7) (8) (9)

(1) Shape of terminal opening
P: Male terminal
S: Female terminal
(2) Terminal connection method
No sign: Soldering
W: Wrapping C: Crimp
(3) Series No.
16: 1600 series
(4) Number of contacts 34: 34 contacts
(5) Serial sign for connctor units
Provided with a sequence of upper-case alphabetic characters.
No sign or sign other than W: Soldering
Sequence: No sign, B, C, D, E ...
(6) Plating
A: Silver-plated
G: Gold-plated
(7) Signs for accessories
C: Plug case
ST: Stopper bracket with horizontal cable inlet opening
J: Jack Case
H: Handle
DB: Deep bracket
(8) Serial signs for accessories
Each accessory (C, ST, J, H, DB) is provided with sequence of upper-case. alphabetic characters.
Sequence: No sign, A, B, C...
Accessories, C, ST, or J followed by ✗no sign‡ : Side lock types
Accessories, C and ST followed By A: Top touch lock type
Note: The space for no sign is filled sequentially.
(9) Special specification, ( ) is filled with a serial number, except for the case and bracket, for which the following apply.
(51): Bracket only
(50): Case only

Mlav.1.2019 Copyright 2019 HIROSE ELECTRIC CO., LTD. All Rights Reserved.

The product information in this catalog is for reference only. Please request the Engineering Drawing for the most current and accurate design information.
All non-RoHS products have been discontinued, or will be discontinued soon. Please check the products status on the Hirose website RoHS search at www.hirose-connectors.com, or contact your Hirose sales representative.

Cross Reference to NTT No.

Type	NTT No.	Short Form	HRS No.	Part No.	Type	NTT No.	Short Form	HRS No.	Part No.
Plug	CN-3320GLWPMSA	20GLWPMSA	CL216-0247-5-51	P-1620BA-CA (51)	Receptacle	CN-5445GJMSA	45GJMSA	CL216-0257-9-51	P-1645BA-STA (51)
	CN-4028GLWPMSA	28GLWPMSA	CL216-0249-0-51	P-1628BA-CA (51)		CN-6760GJMSA	60GJMSA	CL216-0258-1-51	P-1660BA-STA (51)
	CN-4534GLWPMSA	34GLWPMSA	CL216-0250-0-51	P-1634BA-CA (51)		CN-3320G2JMSA	20G2JMSA	CL216-0292-0-51	PW-1620BA-STA (51)
	CN-5445GLWPMSA	45GLWPMSA	CL216-0251-2-51	P-1645BA-CA (51)		CN-3724G2JMSA	24G2JMSA	CL216-0293-2-51	PW-1624BA-STA (51)
	CN-6760GLWPMSA	60GLWPMSA	CL216-0252-5-51	P-1660BA-CA (51)		CN-4028G2JMSA	28G2JMSA	CL216-0294-5-51	PW-1628BA-STA (51)
	CN-3320GLWPFSA	20GLWPFSA	CL216-0153-3-51	P-1620A-CA (51)		CN-4534G2JMSA	34G2JMSA	CL216-0296-0-51	PW-1634BA-STA (51)
	CN-3724GLWPFSA	24GLWPFSA	CL216-0154-6-51	P-1624A-CA (51)		CN-6760G2JMSA	60G2JMSA	CL216-0298-6-51	PW-1660BA-STA (51)
	CN-4028GLWPFSA	28GLWPFSA	CL216-0155-9-51	P-1628A-CA (51)		CN-3320GJFSA	20GJFSA	CL216-0151-8-51	S-1620A-STA (51)
	CN-4534GLWPFSA	34GLWPFSA	CL216-0126-0-51	P-1634A-CA (51)		CN-3724GJFSA	24GJFSA	CL216-0148-3-51	S-1624A-STA (51)
	CN-5445GLWPFSA	45GLWPFSA	CL216-0127-3-51	P-1645A-CA (51)		CN-4028GJFSA	28GJFSA	CL216-0152-0-51	S-1628A-STA (51)
	CN-6760GLWPFSA	60GLWPFSA	CL216-0128-6-51	P-1660A-CA (51)		CN-4028G2JFSA	28G2JFSA	CL216-0313-8-51	SW-1628A-STA (51)
Receptacle	CN-3724GJMSA	24GJMSA	CL216-0254-0-51	P-1624BA-STA (51)		CN-4534G2JFSA	34G2JFSA	CL216-0299-9-51	SW-1634A-STA (51)
	CN-4028GJMSA	28GJMSA	CL216-0255-3-51	P-1628BA-STA (51)		CN-5445G2JFSA	45G2JFSA	CL216-0300-6-51	SW-1645A-STA (51)
	CN-4534GJMSA	34GJMSA	CL216-0256-6-51	P-1634BA-STA (51)		CN-6760G2JFSA	60G2JFSA	CL216-0301-9-51	SW-1660A-STA (51)

Note: NTT Types are all assembled with connector inserts and plug shells or stopper brackets.

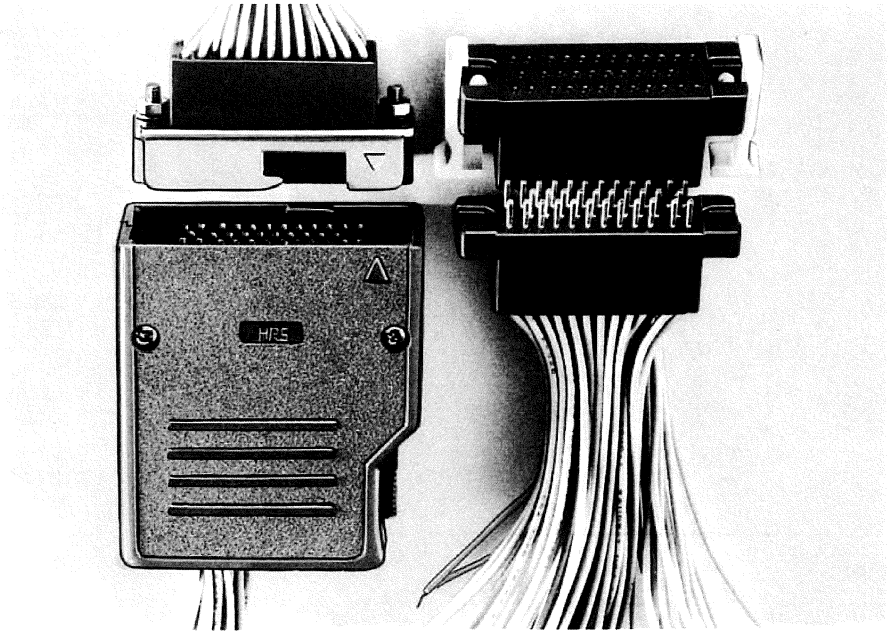

Mav.1.2010 Copyright 2010 HIROSE ELECTRIC CO., LTD. All Rights Reserved.

The product information in this catalog is for reference only. Please request the Engineering Drawing for the most current and accurate design information.
All non-RoHS products have been discontinued, or will be discontinued soon. Please check the products status on the Hirose website RoHS search at www.hirose-connectors.com, or contact your Hirose sales representative.

Mav.1.2010 Copyright 2010 HIROSE ELECTRIC CO., LTD. All Rights Reserved.

Soldering Eyelet Pin Connector

Male Connector

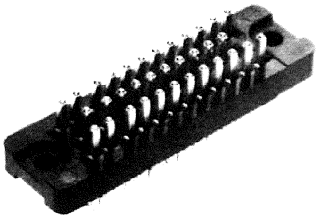

P-1634BA (09)

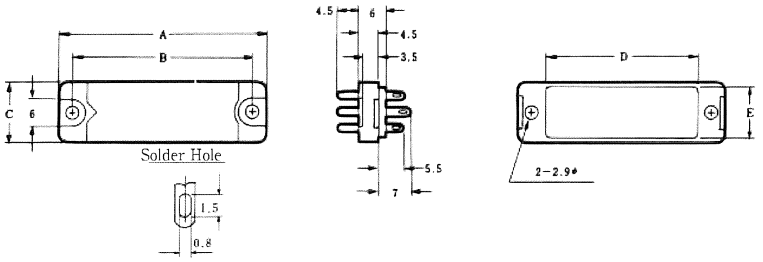

Unit: mm

No. of Pin	A Type		G Type		A	B	C	D	E	RoHS
	HRS No.	Part No.	HRS No.	Part No.						
8	CL216-0171-5-09	P-1608BA (09)	CL216-0180-6-09	P-1608BG (09)	25	19	10	13	8	YES
12	CL216-0172-8-09	P-1612BA (09)	CL216-0181-9-09	P-1612BG (09)	30	24	10	18	8	
16	CL216-0173-0-09	P-1616BA (09)	CL216-0182-1-09	P-1616BG (09)	35	29	10	23	8	
20	CL216-0174-3-09	P-1620BA (09)	CL216-0183-4-09	P-1620BG (09)	33	27	13	21	11	
24	CL216-0175-6-09	P-1624BA (09)	CL216-0184-7-09	P-1624BG (09)	37	31	13	25	11	
28	CL216-0176-9-09	P-1628BA (09)	CL216-0185-0-09	P-1628BG (09)	40	34	13	28	11	
34	CL216-0177-1-09	P-1634BA (09)	CL216-0186-2-09	P-1634BG (09)	45	39	13	33	11	
45	CL216-0178-4-09	P-1645BA (09)	CL216-0187-5-09	P-1645BG (09)	54	48	13	42	11	
60	CL216-0179-7-09	P-1660BA (09)	CL216-0188-8-09	P-1660BG (09)	67	61	13	55	11	

Female Connector

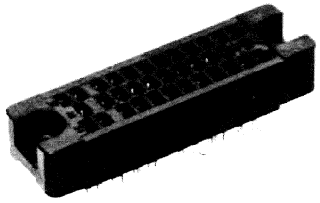

S-1634A (09)

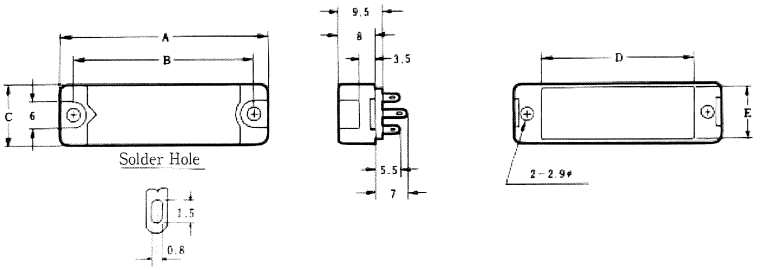

Unit: mm

No. of Pin	A Type		G Type		A	B	C	D	E	RoHS
	HRS No.	Part No.	HRS No.	Part No.						
8	CL216-0001-5-09	S-1608A (09)	CL216-0055-4-09	S-1608G (09)	25	19	10	13	8	YES
12	CL216-0002-8-09	S-1612A (09)	CL216-0056-7-09	S-1612G (09)	30	24	10	18	8	
16	CL216-0003-0-09	S-1616A (09)	CL216-0057-0-09	S-1616G (09)	35	29	10	23	8	
20	CL216-0004-3-09	S-1620A (09)	CL216-0058-2-09	S-1620G (09)	33	27	13	21	11	
24	CL216-0005-6-09	S-1624A (09)	CL216-0059-5-09	S-1624G (09)	37	31	13	25	11	
28	CL216-0006-9-09	S-1628A (09)	CL216-0060-4-09	S-1628G (09)	40	34	13	28	11	
34	CL216-0007-1-09	S-1634A (09)	CL216-0061-7-09	S-1634G (09)	45	39	13	33	11	
45	CL216-0008-4-09	S-1645A (09)	CL216-0062-0-09	S-1645G (09)	54	48	13	42	11	
60	CL216-0009-7-09	S-1660A (09)	CL216-0063-2-09	S-1660G (09)	67	61	13	55	11	

The product information in this catalog is for reference only. Please request the Engineering Drawing for the most current and accurate design information.
All non-RoHS products have been discontinued, or will be discontinued soon. Please check the products status on the Hirose website RoHS search at www.hirose-connectors.com, or contact your Hirose sales representative.

Wire Wrapping Pin Connector

Male Connector

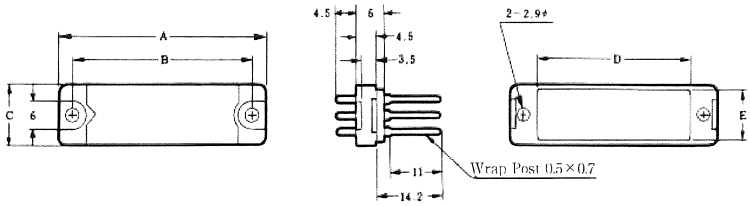

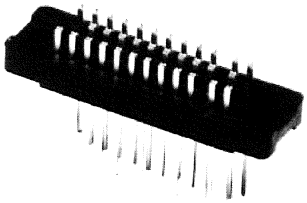

PW-1634BA (09)

Unit: mm

No. of Pin	A Type		G Type		A	B	C	D	E	RoHS
	HRS No.	Part No.	HRS No.	Part No.						
8	CL216-0198-1-09	PW-1608BA (09)	CL216-0216-1-09	PW-1608BG (09)	25	19	10	13	8	YES
12	CL216-0199-4-09	PW-1612BA (09)	CL216-0217-4-09	PW-1612BG (09)	30	24	10	18	8	
16	CL216-0200-1-09	PW-1616BA (09)	CL216-0218-7-09	PW-1616BG (09)	35	29	10	23	8	
20	CL216-0201-4-09	PW-1620BA (09)	CL216-0219-0-09	PW-1620BG (09)	33	27	13	21	11	
24	CL216-0202-7-09	PW-1624BA (09)	CL216-0220-9-09	PW-1624BG (09)	37	31	13	25	11	
28	CL216-0203-0-09	PW-1628BA (09)	CL216-0221-1-09	PW-1628BG (09)	40	34	13	28	11	
34	CL216-0204-2-09	PW-1634BA (09)	CL216-0222-4-09	PW-1634BG (09)	45	39	13	33	11	
45	CL216-0205-5-09	PW-1645BA (09)	CL216-0223-7-09	PW-1645BG (09)	54	48	13	42	11	
60	CL216-0206-8-09	PW-1660BA (09)	CL216-0224-0-09	PW-1660BG (09)	67	61	13	55	11	

Female Connector

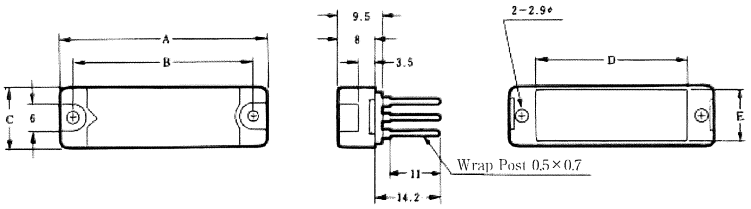

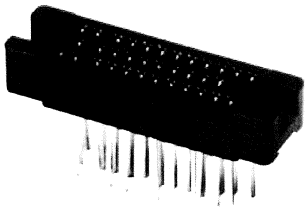

SW-1634A (09)

Unit: mm

No. of Pin	A Type		G Type		A	B	C	D	E	RoHS
	HRS No.	Part No.	HRS No.	Part No.						
8	CL216-0189-0-09	SW-1608A (09)	CL216-0207-0-09	SW-1608G (09)	25	19	10	13	8	YES
12	CL216-0190-0-09	SW-1612A (09)	CL216-0208-3-09	SW-1612G (09)	30	24	10	18	8	
16	CL216-0191-2-09	SW-1616A (09)	CL216-0209-6-09	SW-1616G (09)	35	29	10	23	8	
20	CL216-0192-5-09	SW-1620A (09)	CL216-0210-5-09	SW-1620G (09)	33	27	13	21	11	
24	CL216-0193-8-09	SW-1624A (09)	CL216-0211-8-09	SW-1624G (09)	37	31	13	25	11	
28	CL216-0194-0-09	SW-1628A (09)	CL216-0212-0-09	SW-1628G (09)	40	34	13	28	11	
34	CL216-0195-3-09	SW-1634A (09)	CL216-0213-3-09	SW-1634G (09)	45	39	13	33	11	
45	CL216-0196-6-09	SW-1645A (09)	CL216-0214-6-09	SW-1645G (09)	54	48	13	42	11	
60	CL216-0197-9-09	SW-1660A (09)	CL216-0215-9-09	SW-1660G (09)	67	61	13	55	11	

Mlav.1.2010 Copyright 2010 HIROSE ELECTRIC CO., LTD. All Rights Reserved.

The product information in this catalog is for reference only. Please request the Engineering Drawing for the most current and accurate design information.
All non-RoHS products have been discontinued, or will be discontinued soon. Please check the products status on the Hirose website RoHS search at www.hirose-connectors.com, or contact your Hirose sales representative.

Mav.1.2010 Copyright 2010 HIROSE ELECTRIC CO., LTD. All Rights Reserved.

Side Touch Lock Type Plug Shell

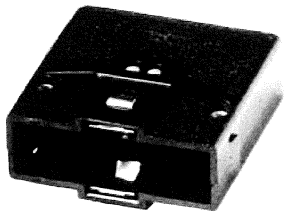

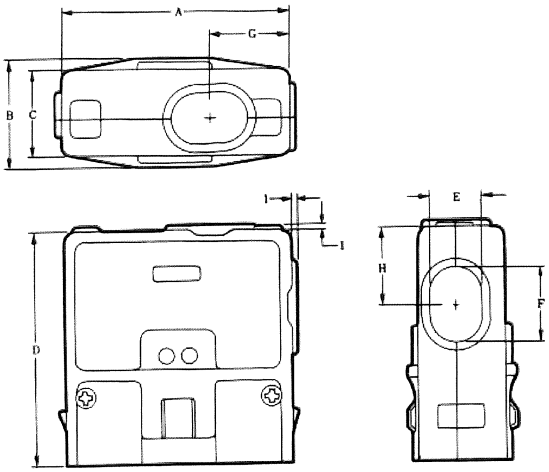

P-1634A-C (50)

Unit: mm

No. of Pin	HRS No.	Part No.	A	B	C	D	E	F	G	H	RoHS
8	CL216-0028-1-50	P-1608A-C (50)	29	20	14.5	42	7.5	7.5	12.5	12.5	YES
12	CL216-0029-4-50	P-1612A-C (50)	34	20	14.5	43.5	7.5	9	13.5	13.5	
16	CL216-0030-3-50	P-1616A-C (50)	39	20	14.5	46	7.5	11.5	14.5	14.5	
20	CL216-0031-6-50	P-1620A-C (50)	37	23	17.5	45.5	11	11	14.5	14.5	
24	CL216-0032-9-50	P-1624A-C (50)	41	23	17.5	46.5	11	12	15	15	
28	CL216-0033-1-50	P-1628A-C (50)	44	23	17.5	47.5	11	13	15.5	15.5	
34	CL216-0034-4-50	P-1634A-C (50)	49	23	17.5	50.5	11	16	17	17	
45	CL216-0035-7-50	P-1645A-C (50)	58	23	17.5	54.5	11	19	18.5	19.5	
60	CL216-0036-0-50	P-1660A-C (50)	71	23	17.5	59.5	11	24	21	22	

Note: All these products are plug cases only. Order connector units separately. The cases can be used for both male and female connector units. The cases marked with an asterisk are of standard specifications.

Side Touch Lock Type Receptacle Bracket

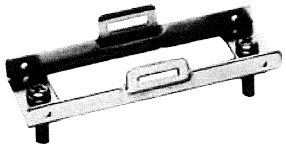

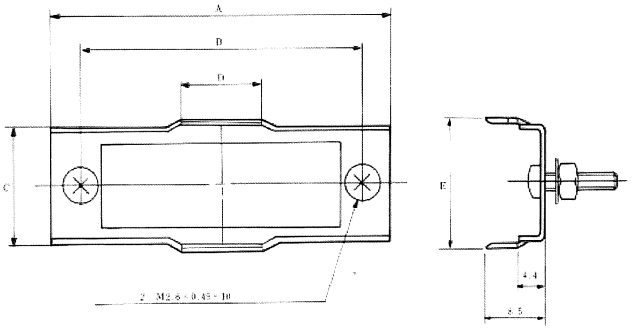

P-1634A-ST (51)

Unit: mm

No. of Pin	HRS No.	Part No.	A	B	C	D	E	RoHS
8	CL216-0046-3-51	P-1608A-ST (51)	27	19	13.6	9.2	15.5	YES
12	CL216-0047-6-51	P-1612A-ST (51)	32	24	13.6	9.2	15.5	
16	CL216-0048-9-51	P-1616A-ST (51)	37	29	13.6	11	15.5	
20	CL216-0049-1-51	P-1620A-ST (51)	35	27	16.6	11	18.5	
24	CL216-0050-0-51	P-1624A-ST (51)	39	31	16.6	11	18.5	
28	CL216-0051-3-51	P-1628A-ST (51)	42	34	16.6	11	18.5	
34	CL216-0052-6-51	P-1634A-ST (51)	47	39	16.6	11	18.5	
45	CL216-0053-9-51	P-1645A-ST (51)	56	48	16.6	15	18.5	
60	CL216-0054-1-51	P-1660A-ST (51)	69	61	16.6	15	18.5	

Note: All these products are stopper brackets only. Order connector units separately. The cases can be used for both male and female connector units. The brackets marked with an asterisk are of standard specifications.

The product information in this catalog is for reference only. Please request the Engineering Drawing for the most current and accurate design information.
All non-RoHS products have been discontinued, or will be discontinued soon. Please check the products status on the Hirose website RoHS search at www.hirose-connectors.com, or contact your Hirose sales representative.

Top Touch Lock Type Plug Shell

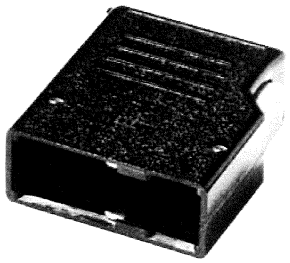

P-1634A-CA (50)

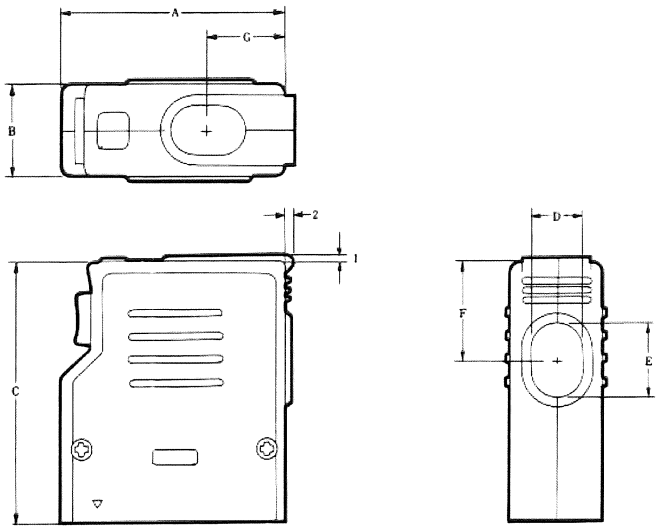

Unit: mm

No. of Pin	HRS No.	Part No.	A	B	C	D	E	E	E	RoHS
20	CL216-0149-6-50	P-1620A-CA (50)	37	20	51	11	11	18	14.5	YES
24	CL216-0147-0-50	P-1624A-CA (50)	41	20	51	11	12	18.5	15	
28	CL216-0150-5-50	P-1628A-CA (50)	44	20	53	11	13	20	15.5	
34	CL216-0111-3-50	P-1634A-CA (50)	49	20	56	11	16	21.5	17	
45	CL216-0112-6-50	P-1645A-CA (50)	58	20	60	11	19	24	18.5	
60	CL216-0113-9-50	P-1660A-CA (50)	71	20	65	11	24	26.5	21	

Note: All these products are plug cases only. Order connector units separately. The cases can be used for both male and female connector units. The cases marked with an asterisk are of standard specifications.

Side Touch Lock Type Receptacle Bracket

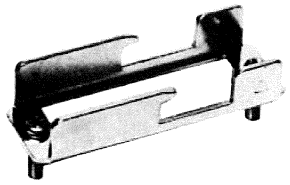

P-1634A-STA (51)

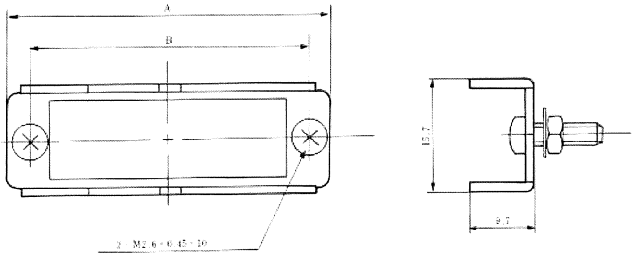

Unit: mm

No. of Pin	HRS No.	Part No.	A	B	RoHS
20	CL216-0156-1-51	P-1620A-STA (51)	33	27	YES
24	CL216-0157-4-51	P-1624A-STA (51)	37	31	
28	CL216-0158-7-51	P-1628A-STA (51)	40	34	
34	CL216-0123-2-51	P-1634A-STA (51)	45	39	
45	CL216-0124-5-51	P-1645A-STA (51)	54	48	
60	CL216-0125-3-51	P-1660A-STA (51)	67	61	

Note: All these products are stopper brackets only. Order connector units separately. The cases can be used for both male and female connector units. The brackets marked with an asterisk are of standard specifications.

Mlav.1.2019 Copyright 2019 HIROSE ELECTRIC CO., LTD. All Rights Reserved.

The product information in this catalog is for reference only. Please request the Engineering Drawing for the most current and accurate design information.
All non-RoHS products have been discontinued, or will be discontinued soon. Please check the products status on the Hirose website RoHS search at www.hirose-connectors.com, or contact your Hirose sales representative.

Mlav.1.2010 Copyright 2010 HIROSE ELECTRIC CO., LTD. All Rights Reserved.

Side Touch Lock Type Jack Shell (For Extension Cable)

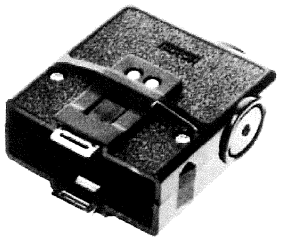

S-1634A-J (50)

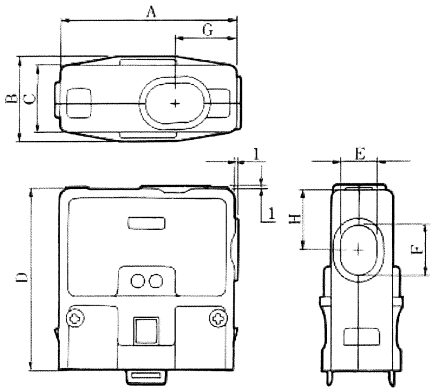

Unit: mm

No. of Pin	HRS No.	Part No.	A	B	C	D	E	F	G	H	RoHS
20	CL216-0139-2-50	S-1620A-J (50)	37	23	17.5	45.5	11	11	14.5	14.5	YES
24	CL216-0140-1-50	S-1624A-J (50)	41	23	17.5	46.5	11	12	15	15	
28	CL216-0141-4-50	S-1628A-J (50)	44	23	17.5	47.5	11	13	15.5	15.5	
34	CL216-0142-7-50	S-1634A-J (50)	49	23	17.5	50.5	11	16	17	17	
45	CL216-0225-2-50	S-1645A-J (50)	58	23	18.5	54.5	11	19	18.5	19.5	
60	CL216-0226-5-50	S-1660A-J (50)	71	23	18.5	59.5	11	24	21	22	

Note: All these products are jack cases only. Order connector units separately.
The cases can be used for female connector units only.

Top Touch Lock Type Stopper Bracket

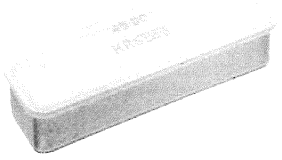

1645STA-DC

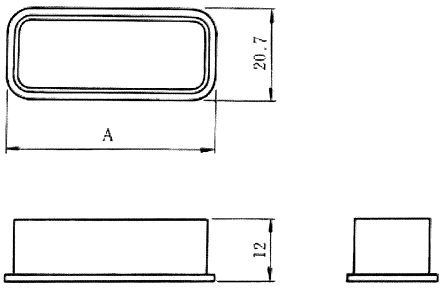

Unit: mm

No. of Pin	HRS No.	Part No.	A	RoHS
20	CL216-0321-6	1620STA-DC	38.3	YES
24	CL216-0322-9	1624STA-DC	42.3	
28	CL216-0323-1	1628STA-DC	45.3	
34	CL216-0324-4	1634STA-DC	50.3	
45	CL216-0325-7	1645STA-DC	59.3	
60	CL216-0326-0	1660STA-DC	72.3	

The product information in this catalog is for reference only. Please request the Engineering Drawing for the most current and accurate design information.
All non-RoHS products have been discontinued, or will be discontinued soon. Please check the products status on the Hirose website RoHS search at www.hirose-connectors.com, or contact your Hirose sales representative.

SHOULDER-TOUCH LOCK TYPE

General

The shoulder-touch lock type plug cases are highly reliable, lightweight, sturdy, and operable. 8, 12, and 16-contact models are available. Hirose high-density packging plug cases, including the top-touch lock type, are available in 8 to 60-contact models.

Material and Finish

Description	Material	Finish
Plug case	Polypropylene resin	Black
Stopper	Steel	Nickel plating

Plug Case

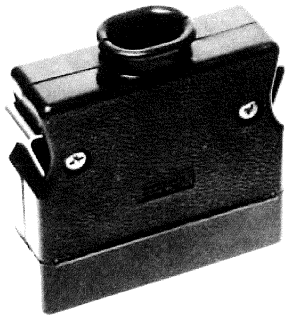

1616-CBA (50)

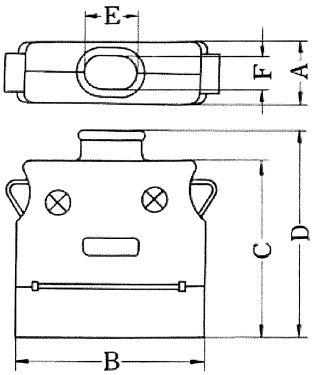

Unit: mm

No. of Pin	HRS No.	Part No.	A	B	C	D	E	F	RoHS
8	CL216-0416-0-50	1608-CBA (50)	14	35	40	45	7.5ϕ		YES
12	CL216-0417-3-51	1612-CBA (51)	14	40	41	46	9	7.5	
16	CL216-0418-6-50	1616-CBA (50)	14	45	42	47	11.5	7.5	

Note: Order connector units separately. The cases can be used for both male and female connector units.The cases marked with an asterisk are of standard specifications.

Stopper

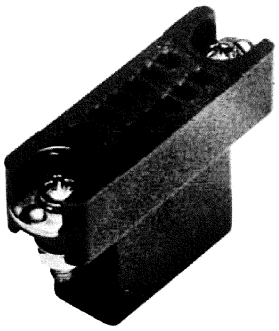

1600-STB (05)

Note: Mounted on a connector unit
(Each package contains two stoppers)

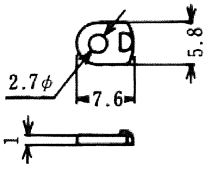

How to Mount

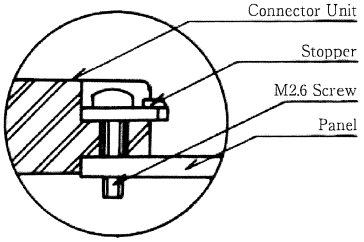

HRS No.	Part No.	Remark	RoHS
CL216-0302-1-05	1600-STB (05)	Common for any size	YES

Note: Order connector units separately. The cases maked with an asterisk are of standard specifications.

Mlav.1.2010 Copyright 2010 HIROSE ELECTRIC CO., LTD. All Rights Reserved.

The product information in this catalog is for reference only. Please request the Engineering Drawing for the most current and accurate design information.
All non-RoHS products have been discontinued, or will be discontinued soon. Please check the products status on the Hirose website RoHS search at www.hirose-connectors.com, or contact your Hirose sales representative.

1600 SUMICON CRIMP TYPE CONNECTORS

General

The SUMICON 1600 series are high-performance compact crimp type connectors developed for labor saving in connection work. 8, 12, 16, 20, 24, 34, 45 and 60-contact models are available. All models are compatible with our previous top-lock type plig cases. For using the connectors separately, easy-to-mount plastic locks are available to expand their functions.

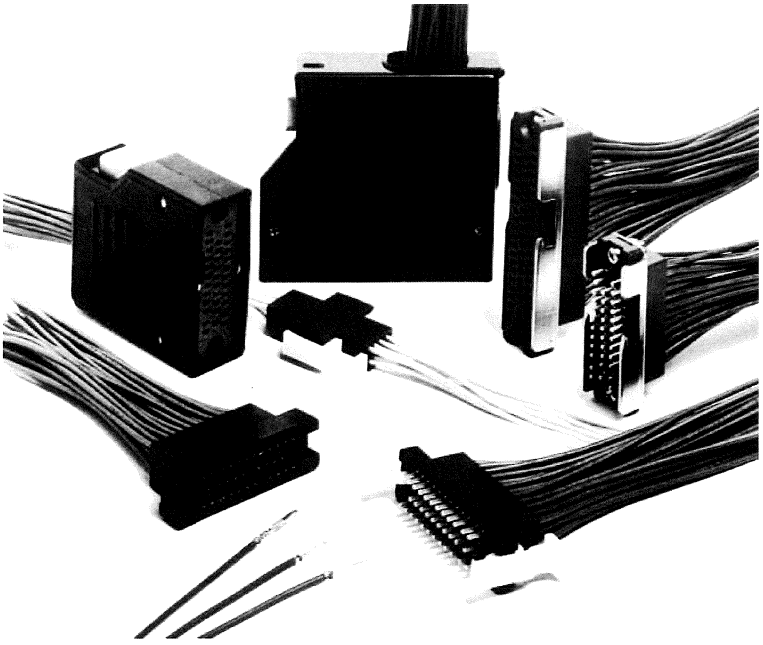

Orderig Information

Item	Standard			
Contact Resistance	7mΩ or less at DC 1A (contact only)			
Insulation Resistance	5,000MΩ or more at DC 500V			
Withstand Voltage	AC 1,000V for 1minute			
Rating Current	3A			
Applicable Cable	AWG#24-28 (Coating O.D. 1.6φ-0.9φ)			
Crimping strength (Unit: kg or more)	Cable	AWG#24	AWG#26	AWG#28
	Crimping force	3.6	2.4	1.6

Part	Material	Finish
Insulator	Glass-containing polycarbonate resin UL94V-0	Blue
Male Terminal	Brass	Gold-plated Silver-Plated
Female Terminal	Phosphor bronze	Gold-plated Silver-Plated

Features

1. Since this is a press-fit type connector, anyone can performe wiring securely with high reliability.
2. For contact, a two-point contact system is employed for outstanding reliability, It asiso offers superior mechanical strength.
3. The Sumicon 1600 Series Press-Fit Type Connectors are interchangeable with the conventional solder, DIP and lapping type connectors. They are applicable, therfore, to a wider range of applications.
4. To use connector unit separately, jointly employing an easily installable plastic lock will prevent vibrations and/or cable dead weight from unplugging the connector. The plastic lock, moreover, can be used with either center-suspension or panel-mount system.
5. All wiring spliced with the connector is hidden completely inside the housing, allowing for perfect insulation.

Mav.1.2019 Copyright 2019 HIROSE ELECTRIC CO., LTD. All Rights Reserved.

Mlav.1.2019 Copyright 2019 HIROSE ELECTRIC CO., LTD. All Rights Reserved.

Housing

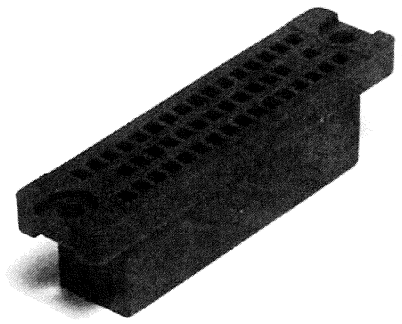

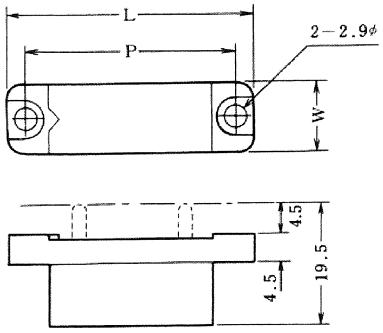

Unit: mm

HRS No.	No. of Pin	Part No.	L	P	W	RoHS
CL216-0335-0	8	PC-1608	25	19	10	YES
CL216-0336-3	12	PC-1612	30	24	10	
CL216-0337-6	16	PC-1616	35	29	10	
CL216-0338-9	20	PC-1620	33	27	13	
CL216-0339-1	24	PC-1624	37	31	13	
CL216-0340-0	28	PC-1628	40	34	13	
CL216-0341-3	34	PC-1634	45	39	13	
CL216-0342-6	45	PC-1645	54	48	13	
CL216-0343-9	60	PC-1660	67	61	13	

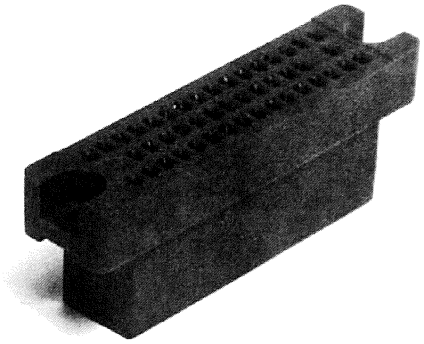

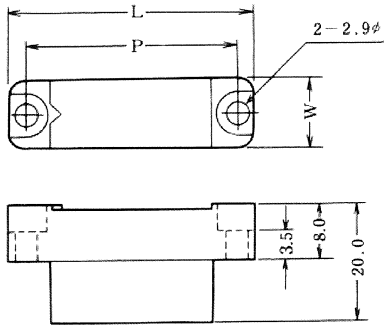

Unit: mm

HRS No.	No. of Pin	Part No.	L	P	W	RoHS
CL216-0344-1	8	SC-1608	25	19	10	YES
CL216-0345-4	12	SC-1612	30	24	10	
CL216-0346-7	16	SC-1616	35	29	10	
CL216-0347-0	20	SC-1620	33	27	13	
CL216-0348-2	24	SC-1624	37	31	13	
CL216-0349-5	28	SC-1628	40	34	13	
CL216-0350-4	34	SC-1634	45	39	13	
CL216-0351-7	45	SC-1645	54	48	13	
CL216-0352-0	60	SC-1660	67	61	13	

Contact

Male Contact

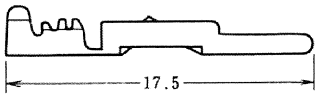

Type	HRS No.	Part No.	Plating	RoHS
Loose	CL216-0331-0	PC-1600-111	Gold	YES
	CL216-0332-2	PC-1600-112	Silver	
Chain	CL216-0363-6	PC-1600-211	Gold	
	CL216-0364-9	PC-1600-212	Silver	

Female Contact

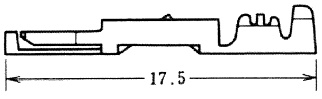

Type	HRS No.	Part No.	Plating	RoHS
Loose	CL216-0333-5	SC-1600-111	Gold	YES
	CL216-0334-8	SC-1600-112	Silver	
Chain	CL216-0365-1	SC-1600-211	Gold	
	CL216-0366-4	SC-1600-212	Silver	

Note: Loose-piece terminals are available in packs. Each pack contains 100 terminals. Strip terminals are available in reels. Each reel contains 10,000 terminals.

The product information in this catalog is for reference only. Please request the Engineering Drawing for the most current and accurate design information.
All non-RoHS products have been discontinued, or will be discontinued soon. Please check the products status on the Hirose website RoHS search at www.hirose-connectors.com, or contact your Hirose sales representative.

Tools

Type	HRS No.	Part No.
Manual crimping tool	CL250-0003-1	TC-1600-111
Contact extractor	CL250-0004-4	TC-1600-21

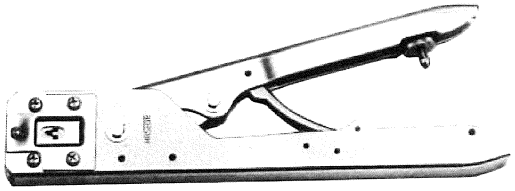

Hand Crimp Tool TC-1600-111

Contact Extractor TC-1600-21

Ordering Informations

● Housing

※ C – 16 ※※

- ※※ — No. of contact
- 16 — Series No.
- C — Crimp type
- ※ — P: Male, S: Female

● Contact

※ C – 1600 ※ ※ ※

- ※ — 1: Gold-plated; 2: Silver-plated
- ※ — Applicable cable; 1: AWG # 24-28
- ※ — 1: Loose piece contact; 2: Strip contact
- 1600 — Series No.
- C — Crimp type
- ※ — P: Male contact; S: Female contact

Using the Connectors

(1) Take care when removing the connectors to pull out by the housing and not tug on the wires.

(2) The male terminals of the connectors will be bent if the connectors are twisted when being removed. Take care to pull the characters out straight.

(3) The plastic locks are sufficiently strong to ensure that the connector engagement will not be loosened by vibration or the weight of the wires. Their strength is not sufficient for other loads. When strngth for some other load is required, use the top-touch lock type plug case (common for both solder and wrapping types).

(4) Both gold-plated and silver-plated terminals are available. Use the gold-plated type in adverse environments. In other environments. we recommend the economical silver-plated type.

(5) For crimping, use a manual crimping device for low-volume crimping and maintenance. For high-volume crimping. we recommend the automatic crimping machine shown on page 124.

(6) For plug-in uses, we recommend Sumicon 1600 series solder or wrapping types for improved functionality.

Mav.1.2010 Copyright 2010 HIROSE ELECTRIC CO., LTD. All Rights Reserved.

The product information in this catalog is for reference only. Please request the Engineering Drawing for the most current and accurate design information.
All non-RoHS products have been discontinued, or will be discontinued soon. Please check the products status on the Hirose website RoHS search at www.hirose-connectors.com, or contact your Hirose sales representative.

Mav.1.2019 Copyright 2019 HIROSE ELECTRIC CO., LTD. All Rights Reserved.

Assemblina Procedure

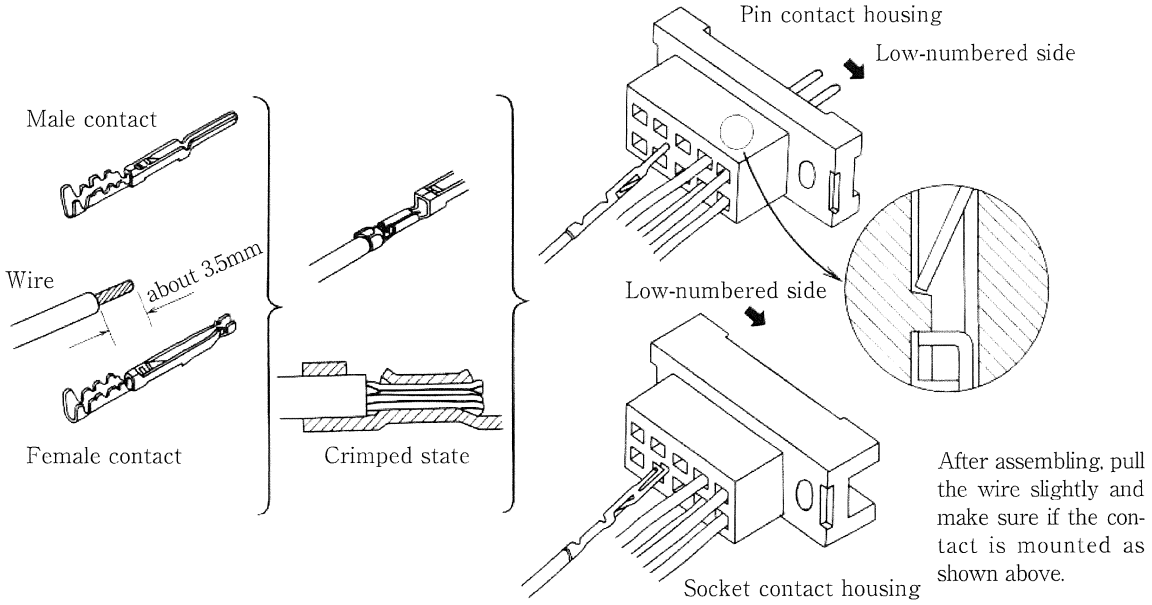

Procedure for Contact Extraction

In case of extracting a contact from the housing due to insertion error or circuit change, follow the steps as shown below.

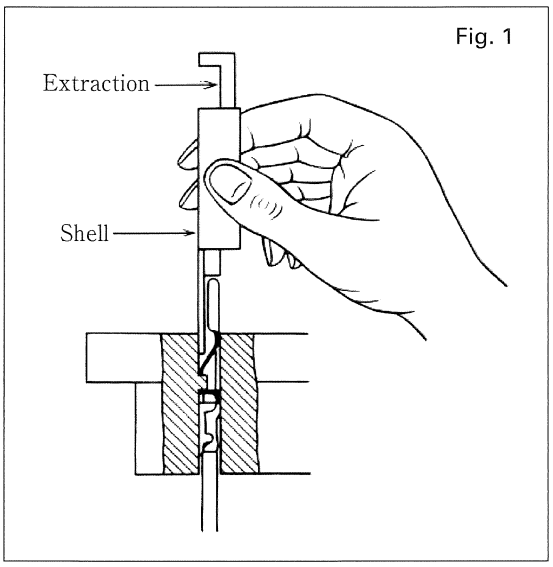

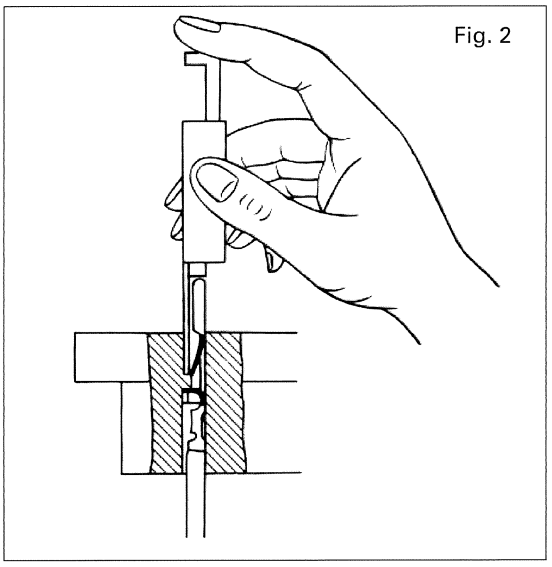

1 Hold the Contact Extractor as shown in Fig. 1, placing the tip of the Extractor on the tip of a contact, then insert it between the contact and the housing.
2. When the tip of the Extractor comes into contact with a stepped part in the housing, the spring will come off from the stepped part with a snap which can be felt. Then, extract the contact by pulling the wire. (Caution: Pushing the tip of the extractor forcibly before the spring has come off from the stepped part may damage the contact).
3. Above Fig. 1 and Fig. 2 show how to extract a contact from socket housing. The same procedure can be employed to extract a contact from pin housing.

The product information in this catalog is for reference only. Please request the Engineering Drawing for the most current and accurate design information.
All non-RoHS products have been discontinued, or will be discontinued soon. Please check the products status on the Hirose website RoHS search at www.hirose-connectors.com, or contact your Hirose sales representative.

Use of Connectors with Respect to Polarity
(to prevent mis-insertion of connectors)

Polarization of SUMICON 1600 series can be achieved by contact arrangement. The crimp type contacts are designed to float a little, so that the use of a Polarizing Key is recommended in order to ensure positive polarizatiom.

In Case of 8, 12 and 16 contact

1. When crimp types are used in both the male and female, do not fill all cavities with contacts. Use Polarizing Key at minimum 2 cavities of Socket housing as shown below and do not fill pin contacts at the corresponding cavities of male housing.
2. When male crimp type is used in combination with solder or wire wrap female type, the connector coupling shall be done corefully not to couple in reverse position. Couplimg shall be made by matching of traiangle marks on connector inserts.

In case of Multi Pin Type more than 20 contact

1. SUMICON 1600 series are naturally polarized in all cavities filled with contacts. When all cavities are not filled, Polarizing Keys shall be inserted in vacant cavities to the minimum for preventing reverse coupling. But when Top Touch Lock Plug Shell is used, Polarizing Keys are not necessary because Plug Shell has polarized mechanism.
2. When male crimp type is used with some vacant cavities in combination with solder or wire wrap female type, Top Touch Lock Plug Shell is recommended.

Mav.1.2019 Copyright 2019 HIROSE ELECTRIC CO., LTD. All Rights Reserved.

The product information in this catalog is for reference only. Please request the Engineering Drawing for the most current and accurate design information.
All non-RoHS products have been discontinued, or will be discontinued soon. Please check the products status on the Hirose website RoHS search at www.hirose-connectors.com, or contact your Hirose sales representative.

Handle

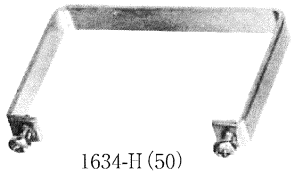

1634-H (50)

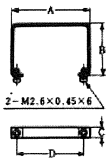

Unit: mm

No. of Pin	HRS No.	Part No.	A	B	C	D	RoHS
16	CL216-0135-1-50	1616-H (50)	36	25	6	29	YES
34	CL216-0136-4-50	1634-H (50)	46	30	6	39	
60	CL216-0137-7-50	1660-H (50)	68	30	8	61	

Deep Bracket

1634-DB

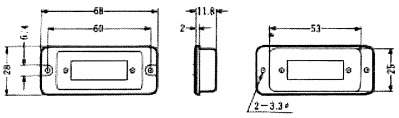

Unit: mm

No. of Pin	HRS No.	Part No.	RoHS
34	CL216-0138-0	1634-DB	YES

Crimp or any Connector Unit

HRS No.	Part No.	RoHS
CL216-0354-5	1600-LC	YES

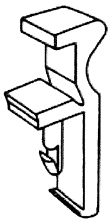

1600-LC

How to Mount

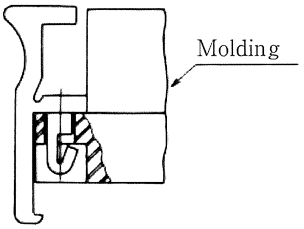

Common for solder, wire wrap, crimp or any connector unit

Polarizing Key

HRS No.	Part No.	RoHS
CL216-0487-9	Polarizing Key	YES

Polarizing Key

How to Mount

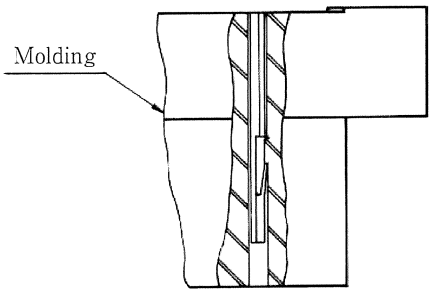

The polarizing key (material: SC-16 " ") can be used for any type of female housing. For handling, see "Notes on connector polarity (prevention of misinsertion" on 124page of this manual.

Mav.1.2010 Copyright 2010 HIROSE ELECTRIC CO., LTD. All Rights Reserved.

The product information in this catalog is for reference only. Please request the Engineering Drawing for the most current and accurate design information.
All non-RoHS products have been discontinued, or will be discontinued soon. Please check the products status on the Hirose website RoHS search at www.hirose-connectors.com, or contact your Hirose sales representative.

Terminal Arrangment and Numbers

The figure shows a male connector as viewed from the termination side

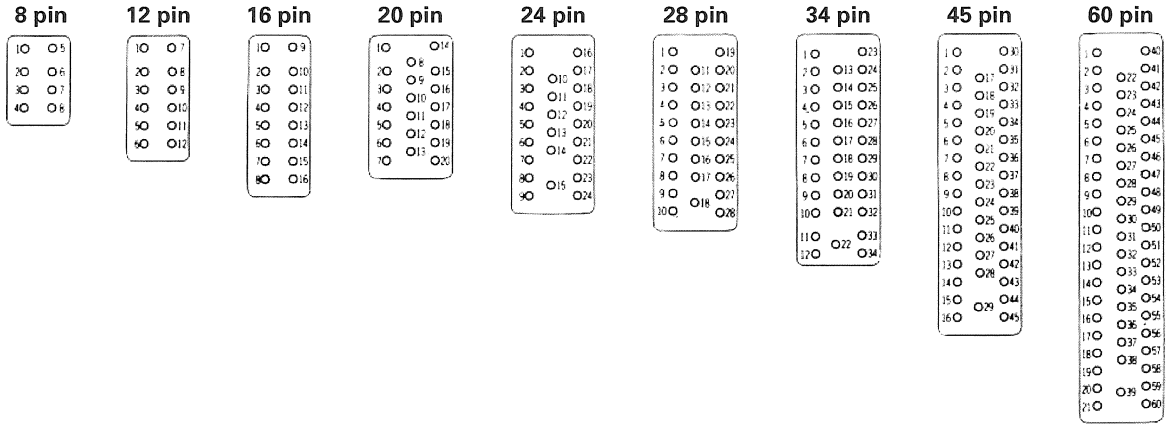

Connector Mounting Hole Dimensions

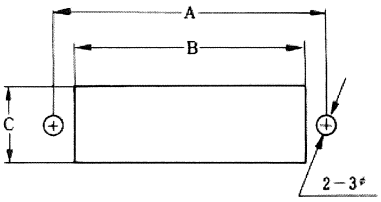

Unit: mm

No. of Contact	A	B	C	screw
8	19	13.5	8.5	
12	24	18.5	8.5	
16	29	23.5	11.5	
20	27	21.5	11.5	
24	31	25.5	11.5	M2.6
28	34	28.5	11.5	
34	39	33.5	11.5	
45	48	42.5	11.5	
60	61	55.5	11.5	

Mlav.1.2010 Copyright 2010 HIROSE ELECTRIC CO., LTD. All Rights Reserved.

The product information in this catalog is for reference only. Please request the Engineering Drawing for the most current and accurate design information.
All non-RoHS products have been discontinued, or will be discontinued soon. Please check the products status on the Hirose website RoHS search at www.hirose-connectors.com, or contact your Hirose sales representative.

SUMICON 1600 SERIES DIP SOLDERING CONNECTORS

General

The SUMICON 1600 series are original Hirose rectangular dip soldering connectors 8, 12, 16, 20, 24, 34, 45 and 60-contact models are available. All models are compatible with the previous 1600 series in mounting and accessories.

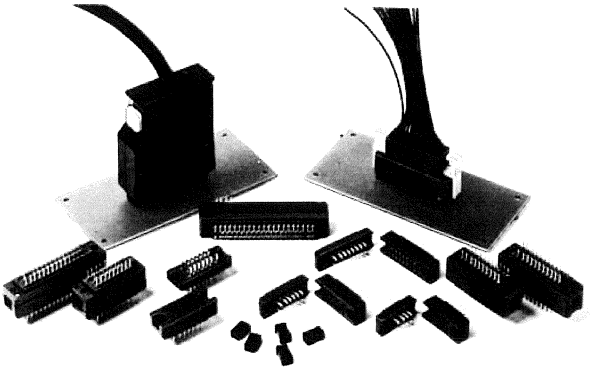

Features

1. Allows straight dip soldering onto a PCB, and is effective in PCB-to-PCB and PCB-to-cable connection.
2. Suitable for use in interface, being compact and lightweight and meeting high-density packaging requirements.
3. Further cuts interconnection costs when simple locks are used.
4. A wide variety of combinations of connection methods available, e.g., dip soldering, wrapping, and crimping, to meet your requirements.

Main Applications

Computers, peripherals and terminals, data communications equipment, measuring instruments, signal equipment, mobile radio equipment, copier, and FAX machine.

Electrical and Environmental

Performance	
Contact Resistance	7mΩ or less at DC 1A
Insulation Resistance	1,000MΩ or higher at DC 500V
Withstand Voltage	AC 1,000V for 1 minute
Current capacity	3A

Material and finish		
Insulator	Glass-Filled diallylphtalate resin	
Male Terminal	Bress	Type A: Silver-plated Type B: Gold-plated
Female Terminal	Phosphor bronze	

Orderig Information

P D — 16 34 □ A — SP □ (09)

(1) (2) (3) (4) (5) (6) (7) (8) (9)

(1) Shape of terminal opening
P: Male terminal
S: Female terminal
(2) Terminal connection method
D: Dip soldering
(3) Series No.
16: 1600 series
(4) Number of contacts
(5) Serial sign for connctor units
Provided with a sequence of upper-case alphabetic characters.
Sequence: No sign, B, C, D, E ...
(6) Plating
A: Silver plated
B: Gold plated
(7) Signs for accessories
SP: Spacer for dip soldering
(8) Serial signs for accessories
Each accessory is provided with a sequence A of upper-case alphabetic characters. Sequence: No sign, A, B ...
(9) Specification
(09) : Standard

Mav.1.2019 Copyright 2019 HIROSE ELECTRIC CO., LTD. All Rights Reserved.

The product information in this catalog is for reference only. Please request the Engineering Drawing for the most current and accurate design information.
All non-RoHS products have been discontinued, or will be discontinued soon. Please check the products status on the Hirose website RoHS search at www.hirose-connectors.com, or contact your Hirose sales representative.

Dip Soldering Type Connector

Male Connector

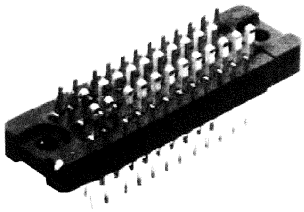

PD-1634BA (09)

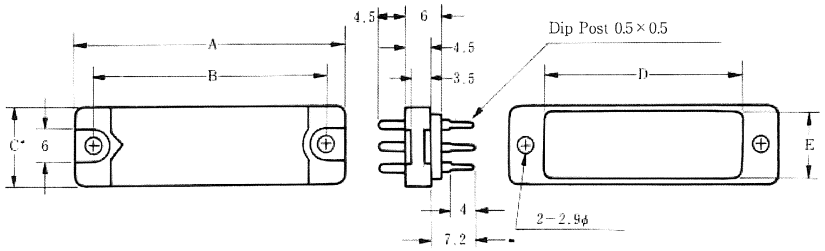

Unit: mm

No. of Pin	A Type		G Type		A	B	C	D	E	RoHS
	HRS No.	Part No.	HRS No.	Part No.						
8	CL216-0388-7-09	PD-1608BA (09)	CL216-0406-7-09	PD-1608BG (09)	25	19	10	13	8	YES
12	CL216-0389-0-09	PD-1612BA (09)	CL216-0407-0-09	PD-1612BG (09)	30	24	10	18	8	
16	CL216-0390-9-09	PD-1616BA (09)	CL216-0408-2-09	PD-1616BG (09)	35	29	10	23	8	
20	CL216-0391-1-09	PD-1620BA (09)	CL216-0409-5-09	PD-1620BG (09)	33	27	13	21	11	
24	CL216-0392-4-09	PD-1624BA (09)	CL216-0410-4-09	PD-1624BG (09)	37	31	13	25	11	
28	CL216-0393-7-09	PD-1628BA (09)	CL216-0411-7-09	PD-1628BG (09)	40	34	13	28	11	
34	CL216-0394-0-09	PD-1634BA (09)	CL216-0412-0-09	PD-1634BG (09)	45	39	13	33	11	
45	CL216-0395-2-09	PD-1645BA (09)	CL216-0413-2-09	PD-1645BG (09)	54	48	13	42	11	
60	CL216-0396-5-09	PD-1660BA (09)	CL216-0414-5-09	PD-1660BG (09)	67	61	13	55	11	

Female Connector

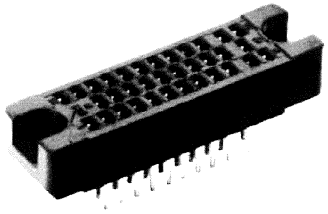

SD-1634A (09)

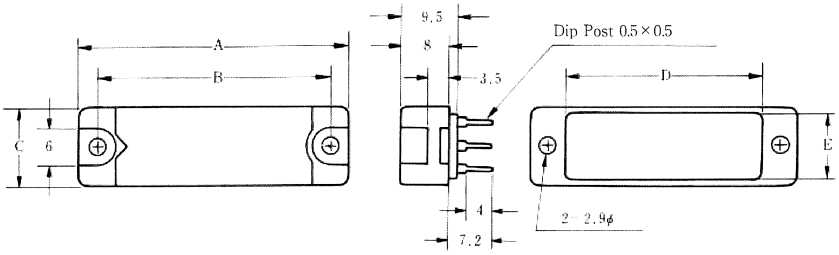

Unit: mm

No. of Pin	A Type		G Type		A	B	C	D	E	RoHS
	HRS No.	Part No.	HRS No.	Part No.						
8	CL216-0379-6-09	SD-1608BA (09)	CL216-0397-8-09	SD-1608BG (09)	25	19	10	13	8	YES
12	CL216-0380-5-09	SD-1612BA (09)	CL216-0398-0-09	SD-1612BG (09)	30	24	10	18	8	
16	CL216-0381-8-09	SD-1616BA (09)	CL216-0399-3-09	SD-1616BG (09)	35	29	10	23	8	
20	CL216-0382-0-09	SD-1620BA (09)	CL216-0400-0-09	SD-1620BG (09)	33	27	13	21	11	
24	CL216-0383-3-09	SD-1624BA (09)	CL216-0401-3-09	SD-1624BG (09)	37	31	13	25	11	
28	CL216-0384-6-09	SD-1628BA (09)	CL216-0402-6-09	SD-1628BG (09)	40	34	13	28	11	
34	CL216-0385-9-09	SD-1634BA (09)	CL216-0403-9-09	SD-1634BG (09)	45	39	13	33	11	
45	CL216-0386-1-09	SD-1645BA (09)	CL216-0404-1-09	SD-1645BG (09)	54	48	13	42	11	
60	CL216-0387-4-09	SD-1660BA (09)	CL216-0405-4-09	SD-1660BG (09)	67	61	13	55	11	

Mav.1.2010 Copyright 2010 HIROSE ELECTRIC CO., LTD. All Rights Reserved.

The product information in this catalog is for reference only. Please request the Engineering Drawing for the most current and accurate design information.
All non-RoHS products have been discontinued, or will be discontinued soon. Please check the products status on the Hirose website RoHS search at www.hirose-connectors.com, or contact your Hirose sales representative.

Mlav.1.2010 Copyright 2010 HIROSE ELECTRIC CO., LTD. All Rights Reserved.

Dip Spacer

HRS No.	Part No.	Application
CL216-0419-9	D-1600-SPA	Connector unit packing (applicable for models with any number of contacts)
CL216-0420-8	D-1600-SPB	For packing with Connector unit stopper (applicable for models with any number of contacts)

Mounting screws must be supplied by the customer

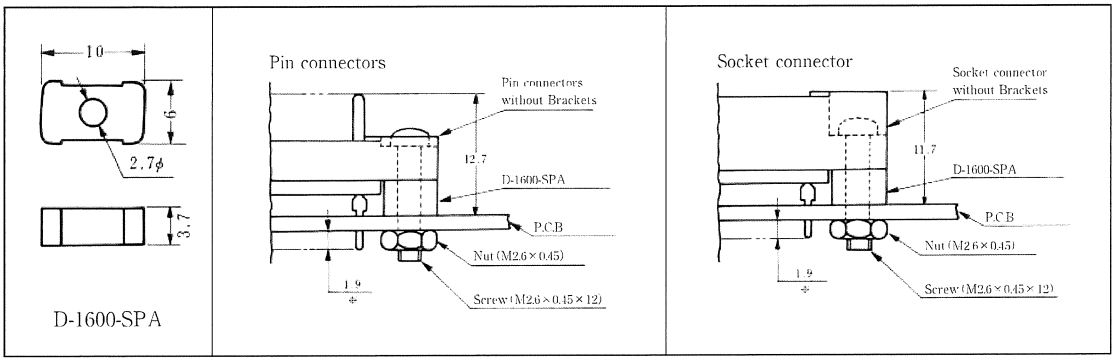

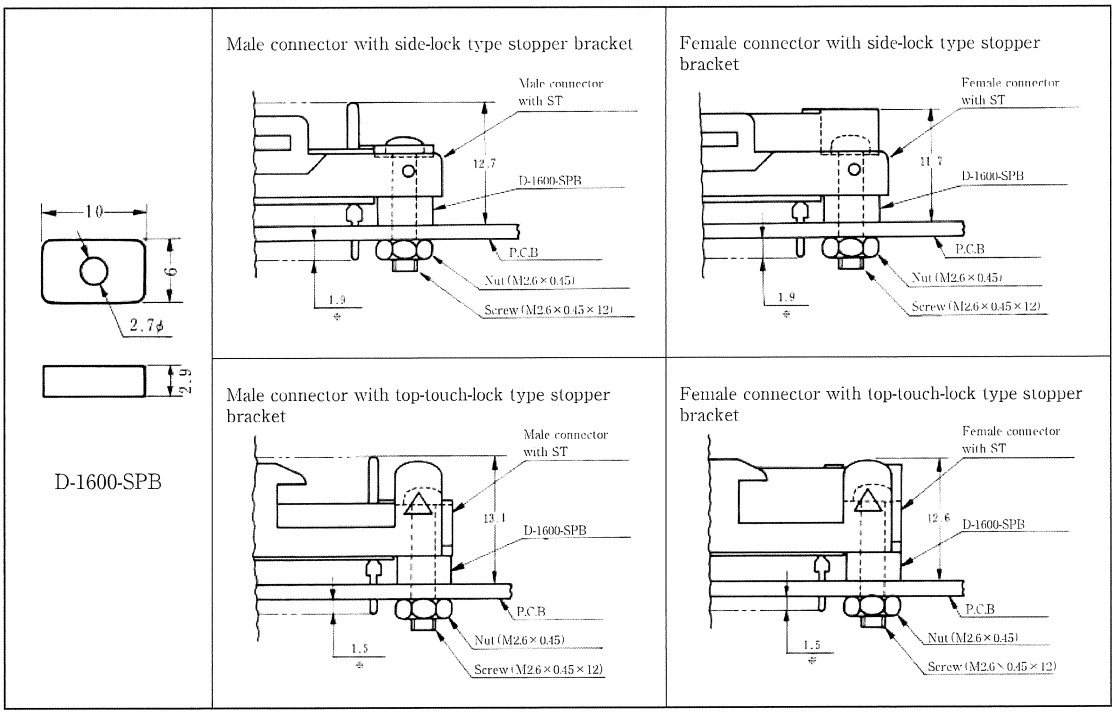

Note 1: The connector unit packaging spacer (SPA) cannot be used for packing with the connector unit stopper bracket.
The packaging spacer with connector unit stopper bracket (SPB) cannot be used for packaging the connector unit.
Note 2: Provide two spacers (SPA and SPB) for each connector unit.
* The dimensions marked with an asterisk (*) are for PCBs of 1.6mm in thickness.

How to use connectors

1. When disconnecting, pull it as straight as possible, because the male pins might be damaged if it is twisted.
2. Connctors are available with gold to be used in adverse environmental conditions and silver-plated pins be used in ordinary conditions.

The product information in this catalog is for reference only. Please request the Engineering Drawing for the most current and accurate design information.
All non-RoHS products have been discontinued, or will be discontinued soon. Please check the products status on the Hirose website RoHS search at www.hirose-connectors.com, or contact your Hirose sales representative.

Recommended Dip Soldering Pattern of Connector

(mm)

When dip soldering the connectors to a PCB, drill holes as shown below. The figures indicate the number of contacts.
Signs △ indicate the V-shaped mark (direction of the connector unit) on the mating face of the connector unit.

Recommended Dip Soldering Pattern of Pin Connector (View of the connector-mounting surface of substrate)

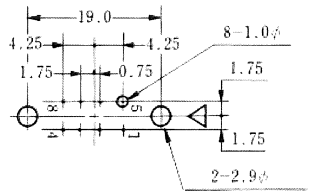

PD-1608

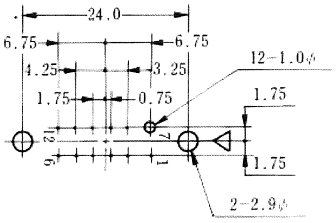

PD-1612

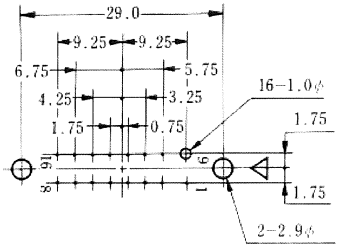

PD-1616

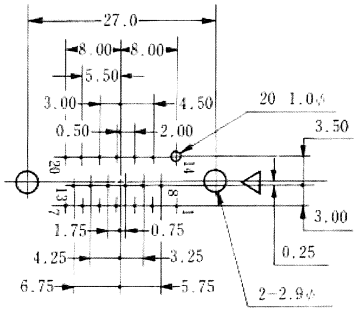

PD-1620

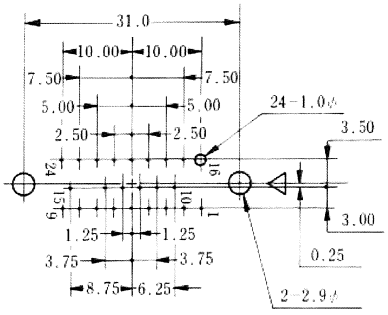

PD-1624

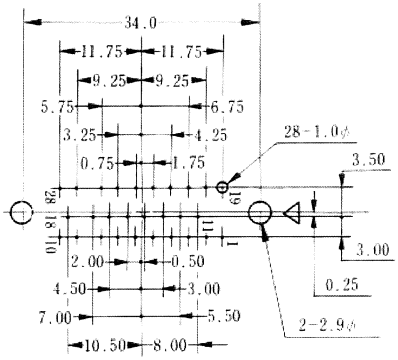

PD-1628

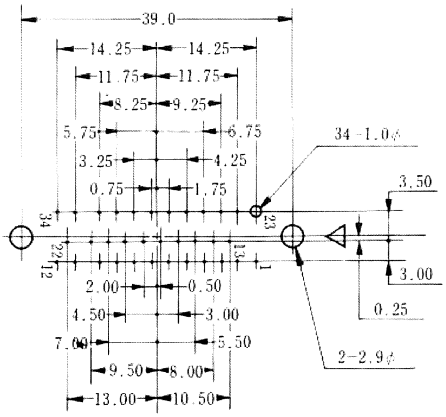

PD-1634

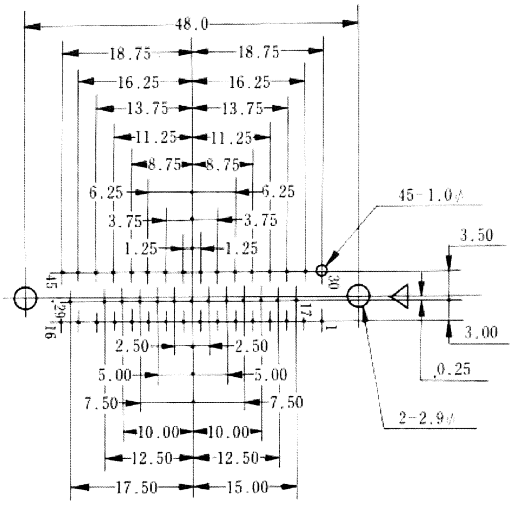

PD-1645

Mav.1.2010 Copyright 2010 HIROSE ELECTRIC CO., LTD. All Rights Reserved.

The product information in this catalog is for reference only. Please request the Engineering Drawing for the most current and accurate design information.
All non-RoHS products have been discontinued, or will be discontinued soon. Please check the products status on the Hirose website RoHS search at www.hirose-connectors.com, or contact your Hirose sales representative.

Mav.1.2010 Copyright 2010 HIROSE ELECTRIC CO., LTD. All Rights Reserved.

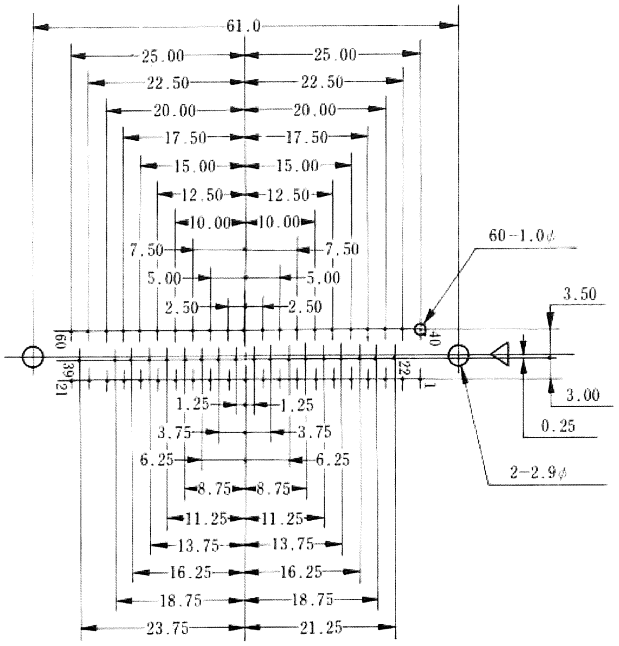

PD-1660

Recommended PC Board Hole Pattern Socket Connector

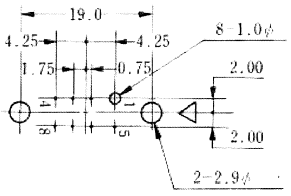

SD-1608

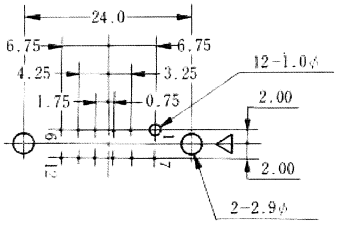

SD-1612

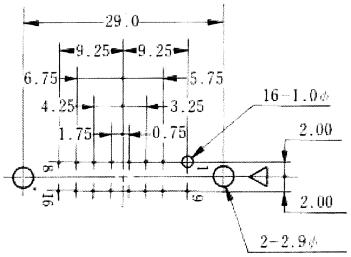

SD-1616

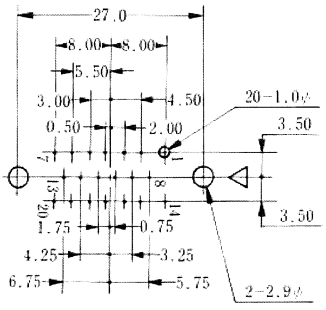

SD-1620

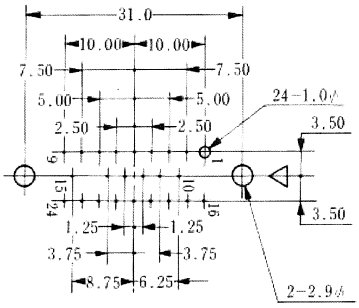

SD-1624

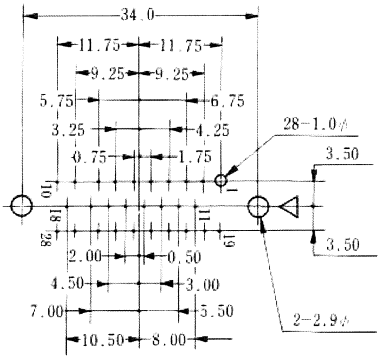

SD-1628

Mlav.1.2010 Copyright 2010 HIROSE ELECTRIC CO., LTD. All Rights Reserved.

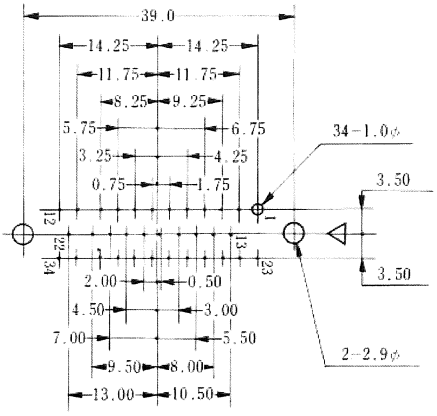

SD-1634

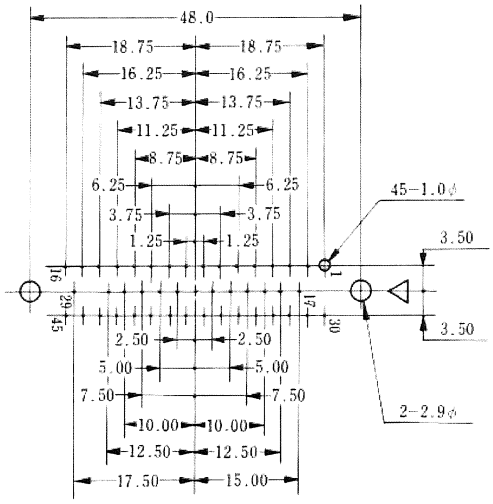

SD-1645

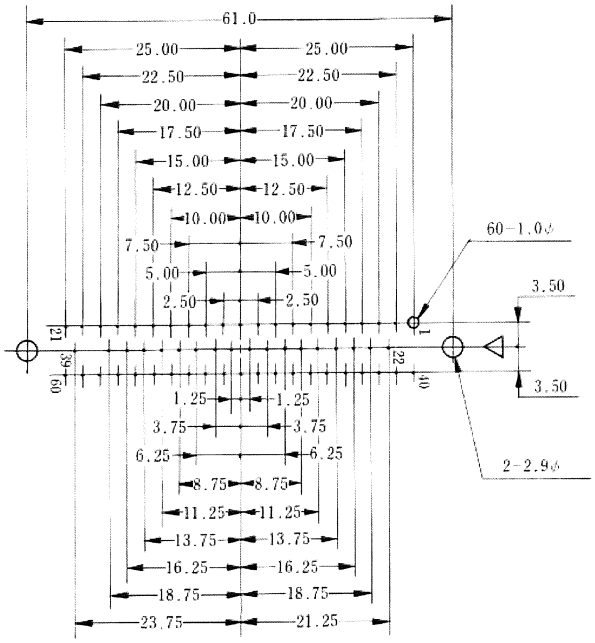

SD-1660

Recommended Mounting Hole

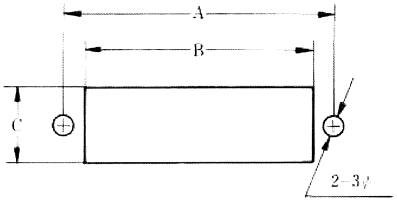

(mm)

No. of Pin	A	B	C	Applicable Screw
8	19	13.5	8.5	M2.6
12	24	18.5	8.5	
16	29	23.5	8.5	
20	27	21.5	11.5	
24	31	25.5	11.5	
28	34	28.5	11.5	
34	39	33.5	11.5	
45	48	42.5	11.5	
60	61	55.5	11.5	

The product information in this catalog is for reference only. Please request the Engineering Drawing for the most current and accurate design information.
All non-RoHS products have been discontinued, or will be discontinued soon. Please check the products status on the Hirose website RoHS search at www.hirose-connectors.com, or contact your Hirose sales representative.

Function Chart 1

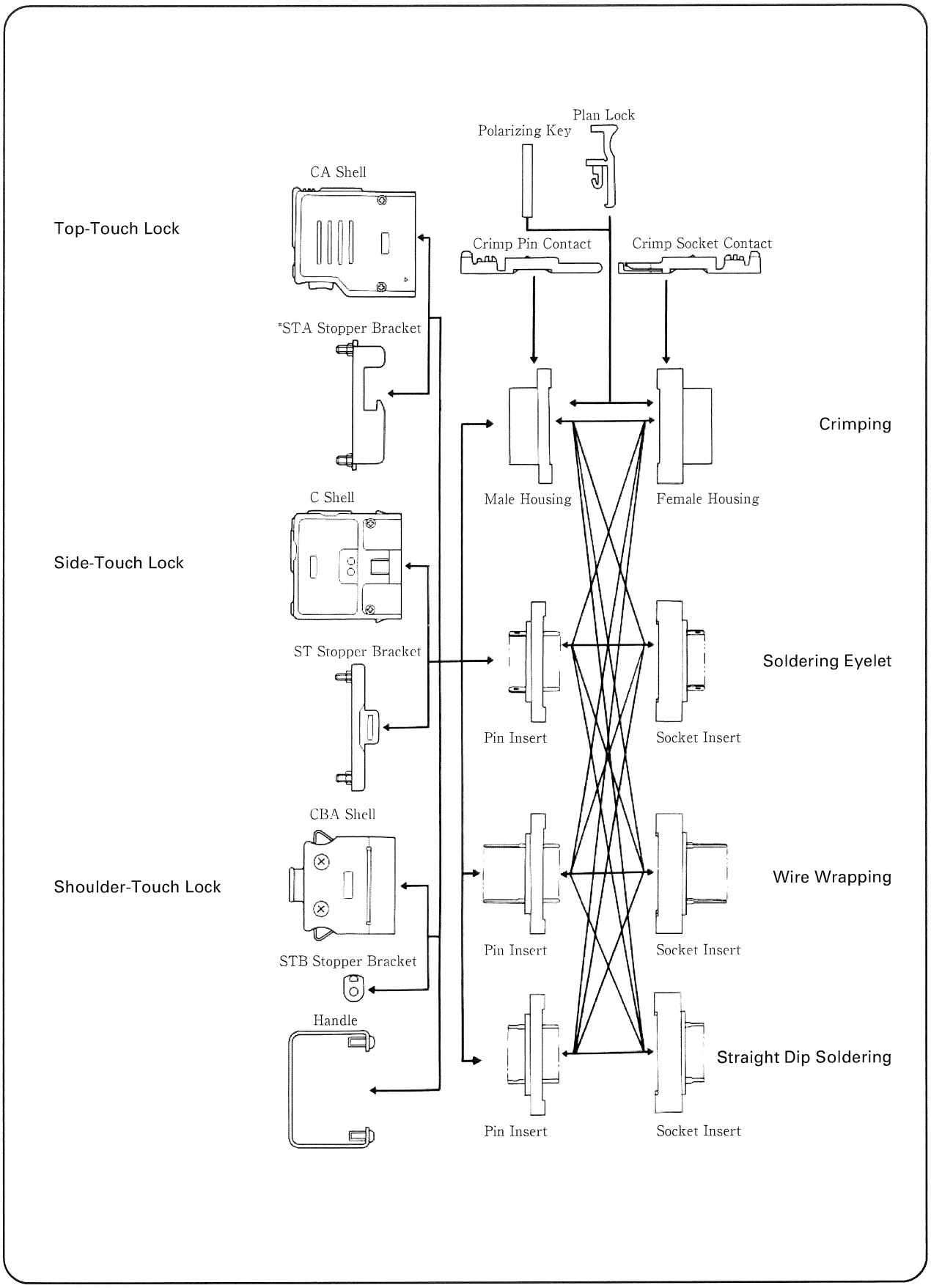

Mav.1.2010 Copyright 2010 HIROSE ELECTRIC CO., LTD. All Rights Reserved.

The product information in this catalog is for reference only. Please request the Engineering Drawing for the most current and accurate design information.
All non-RoHS products have been discontinued, or will be discontinued soon. Please check the products status on the Hirose website RoHS search at www.hirose-connectors.com, or contact your Hirose sales representative.

SUMICON 1600 SERIES RIGHT-ANGLE DIP SOLDERING CONNECTORS (MALE)

General

The SUMICON 1600 series are Hirose right-angle dip soldering connectors (male).
All models are compatible with the existing soldering type, wrapping type, crimping tpe, and straight dip soldering type connectors including their accessories.
20, 28, 34 and 60-contact models are available.

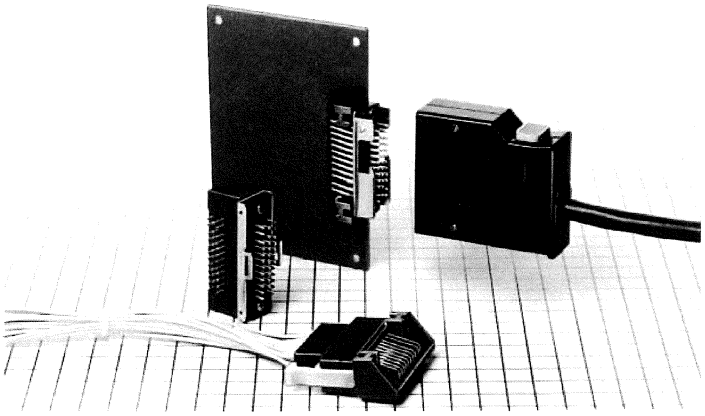

Features

1. Direct dip soldering on a PCB enables convenient parallel connection with cable plugs.
2. Suitable as an interface, being lightweight and capable of high-density packaging.
3. Further cuts interconnection costs by using crimping type plugs with plastic locks for simple cable connection, so no cases are needed.
4. A wide variety of connection methods available, e.g., dip soldering, wrapping, and crimping, to meet your requirements.
5. Available with or without a top-touch lock type bracket and side-lock type bracket, offering you many choices for your applications.
6. Highly solvent-resistant, using insulating materials with high heat resistance and chemical-resistance.

Main Applications

Electronic equipment such as computers, peripherals and terminals, control equipment, and measuring instruments.

Electrical and Environmental

Electrical Characteristics	
Contact Resistance	3A
Contact Resistance	AC 300V
Contact Resistance	10mΩ or less at DC 1A
Contact Resistance	100MΩ or higher at DC 500V
Contact Resistance	1,000Vr.m.s. for 1 minute

Material and Finish		
Insulation	Glass-Filled diallylphthalate resin	Blue
Contact	Brass	Type A: Silver-plated Type B: Gold-plated
Right Angle	Polybutylenephthalate resin	Blue (UL94V-0)
Stopper Bracket	Steel	Nickal plating

Mav.1.2019 Copyright 2019 HIROSE ELECTRIC CO., LTD. All Rights Reserved.

The product information in this catalog is for reference only. Please request the Engineering Drawing for the most current and accurate design information.
All non-RoHS products have been discontinued, or will be discontinued soon. Please check the products status on the Hirose website RoHS search at www.hirose-connectors.com, or contact your Hirose sales representative.

Ordering Information

P	R	–	16	34	B	A	–	STA	R	(50)
(1)	(2)		(3)	(4)	(5)	(6)		(7)	(8)	(9)

(1) Shape of terminal opening
P: Male terminal
(2) Terminal connection method
R: Right-angle dip soldering
(3) Series No.
16: 1600 series
(4) Number of contacts
(5) Serial sign for connctor units
Provided with a sequence of upper-case alphabetic characters.
(6) Plating
A: Silver-plated
B: Gold-plated
(7) Accessories
ST: Side-lock type stopper bracket
STA: Top-touch type stopper bracket
(8) R: Indicates a connector on which the STA bracket is mounted in the reverse direction against the standard. (the standard refers to the direction in which both △ marks on the STA bracket and connector unit are in the direction).
(9) Specification
(50) : RoHS compliant

Right Angle Dip Soldering Pin Connectors With Stopped Bracker for Top-Touch Lock Plug Shell

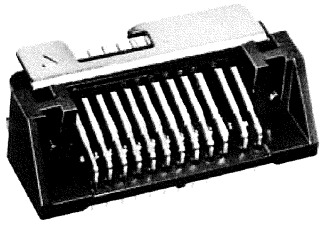

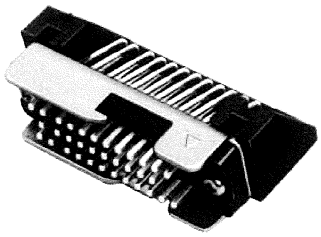

PR-1634BA-STA (50)

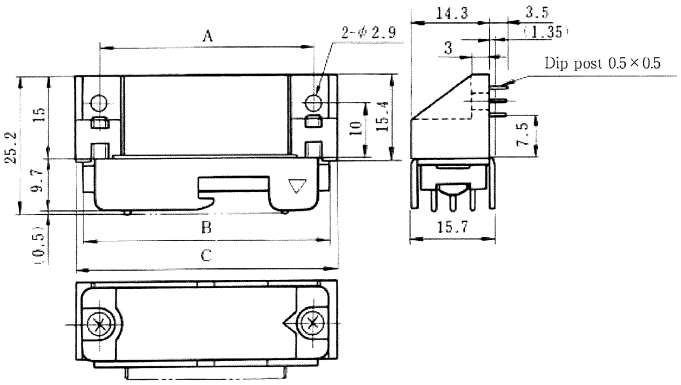

Unit: mm

No. of Pin	A Type		A	B	C	RoHS
	HRS No.	Part No.				
20	CL216-0448-7-50	PR-1620BA-STA (50)	27	33	36	YES
28	CL216-0450-9-50	PR-1628BA-STA (50)	34	40	43	
34	CL216-0451-1-50	PR-1634BA-STA (50)	39	45	48	
60	CL216-0453-7-50	PR-1660BA-STA (50)	61	67	70	

Gold plated type are available options.

Mav.1.2010 Copyright 2010 HIROSE ELECTRIC CO., LTD. All Rights Reserved.

The product information in this catalog is for reference only. Please request the Engineering Drawing for the most current and accurate design information.
All non-RoHS products have been discontinued, or will be discontinued soon. Please check the products status on the Hirose website RoHS search at www.hirose-connectors.com, or contact your Hirose sales representative.

Mlav.1.2019 Copyright 2019 HIROSE ELECTRIC CO., LTD. All Rights Reserved.

With Stopper Bracket for Side-Touch Lock Plug Shell

Unit: mm

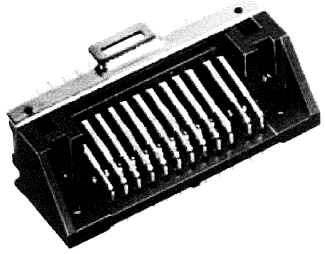

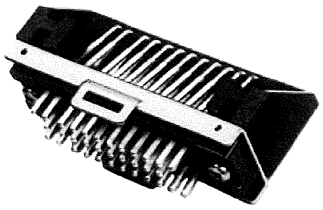

PR-1634BA-ST (50)

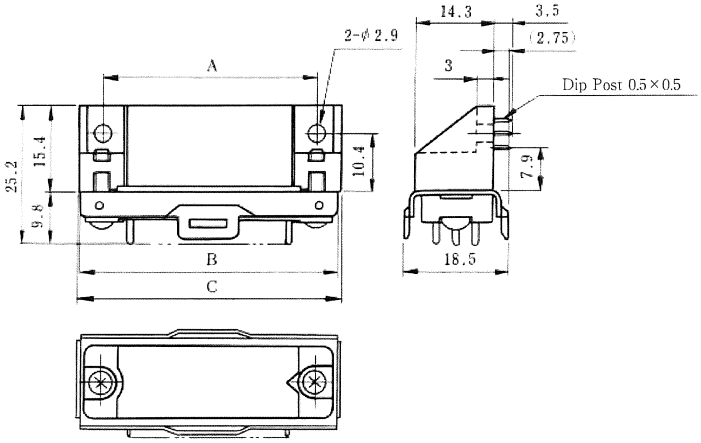

No. of Pin	Type A		A	B	C	RoHS
	HRS No	Part No.				
20	CL216-0455-2-50	PR-1620BA-ST (50)	27	35	36	○
28	CL216-0457-2-50	PR-1628BA-ST (50)	34	42	43	
34	CL216-0458-2-50	PR-1634BA-ST (50)	39	47	48	
60	CL216-0460-2-50	PR-1660BA-ST (50)	61	69	70	

Gold plated type are available options

Connector Unit Only Without Bracket

Unit: mm

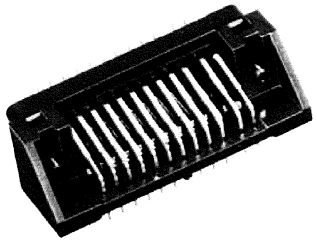

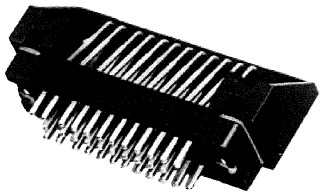

PR-1634BA (50)

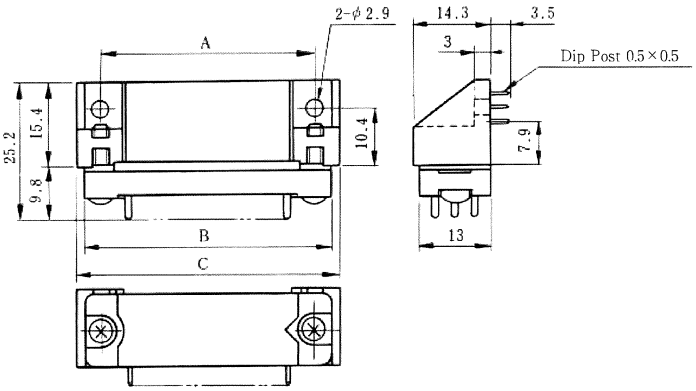

No. of Pin	Type A		A	B	C	RoHS
	HRS No	Part No.				
20	CL216-0461-5-50	PR-1620BA (50)	27	33	36	○
28	CL216-0463-0-50	PR-1628BA (50)	34	40	43	
34	CL216-0464-3-50	PR-1634BA (50)	39	45	48	
60	CL216-0466-9-50	PR-1660BA (50)	61	67	70	

Gold plated type are available options

The product information in this catalog is for reference only. Please request the Engineering Drawing for the most current and accurate design information.
All non-RoHS products have been discontinued, or will be discontinued soon. Please check the products status on the Hirose website RoHS search at www.hirose-connectors.com, or contact your Hirose sales representative.

With Stopper Bracket for Top Touch Lock Plug Shell in Reverse Position

Unit: mm

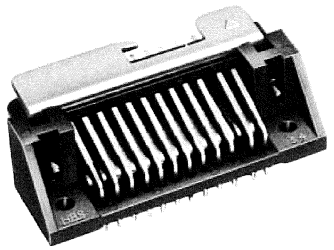

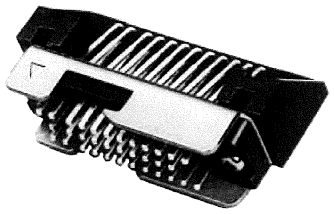

PR-1634BA-STAR(50)

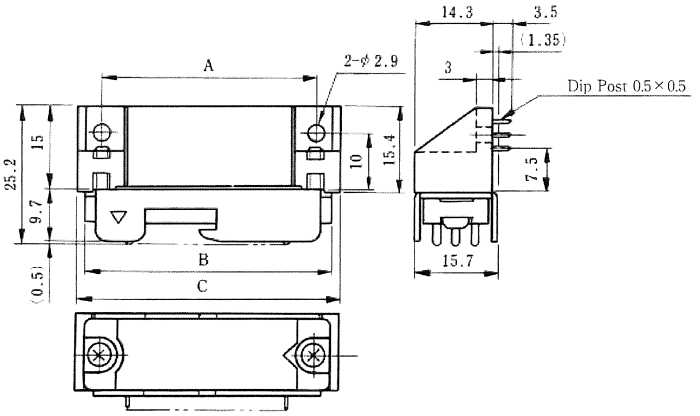

No. of Pin	Type A		A	B	C	RoHS
	HRS No	Part No.				
20	CL216-0495-7-50	PR-1620BA-STAR(50)	27	33	36	○
28	CL216-0497-2-50	PR-1628BA-STAR(50)	34	40	43	
34	CL216-0498-5-50	PR-1634BA-STAR(50)	39	45	48	
60	CL216-0500-5-50	PR-1660BA-STAR(50)	61	67	70	

Gold plated types are available options.

Note: When this type is used mounting direction of socket insert in plug shell shall be in reverse position against the triangle mark on plug shell.

How to Use (Example)

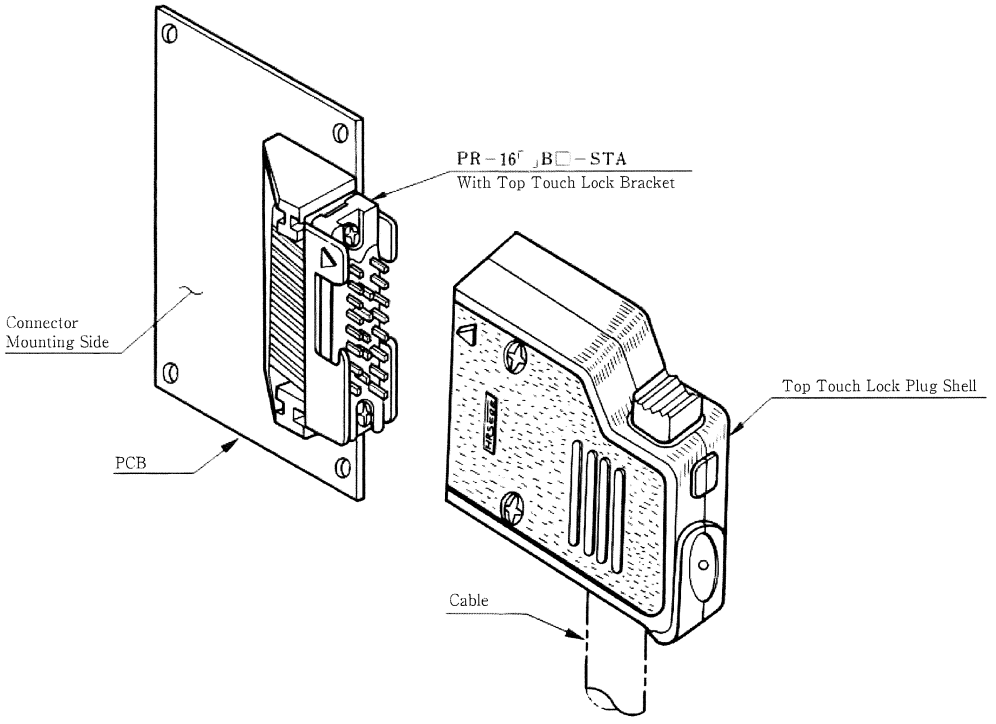

Mav.1.2010 Copyright 2010 HIROSE ELECTRIC CO., LTD. All Rights Reserved.

The product information in this catalog is for reference only. Please request the Engineering Drawing for the most current and accurate design information.
All non-RoHS products have been discontinued, or will be discontinued soon. Please check the products status on the Hirose website RoHS search at www.hirose-connectors.com, or contact your Hirose sales representative.

How to Use Right Angle Dip Soldering Connectors

Unit: mm

1. The standard use of this to mount it on the left side of a vertical PC board. (Fig. 1)

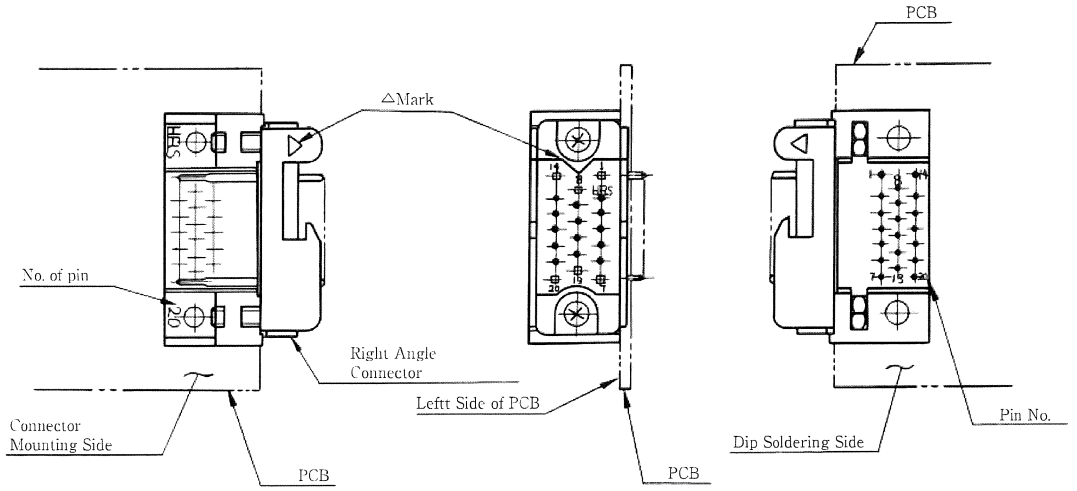

Fig. 1

Unit: mm

2. It is possible to mount it on the right side of PCB but special caution is necessary to be opposite all pin locations on dip soldering surface. (Fig. 2)

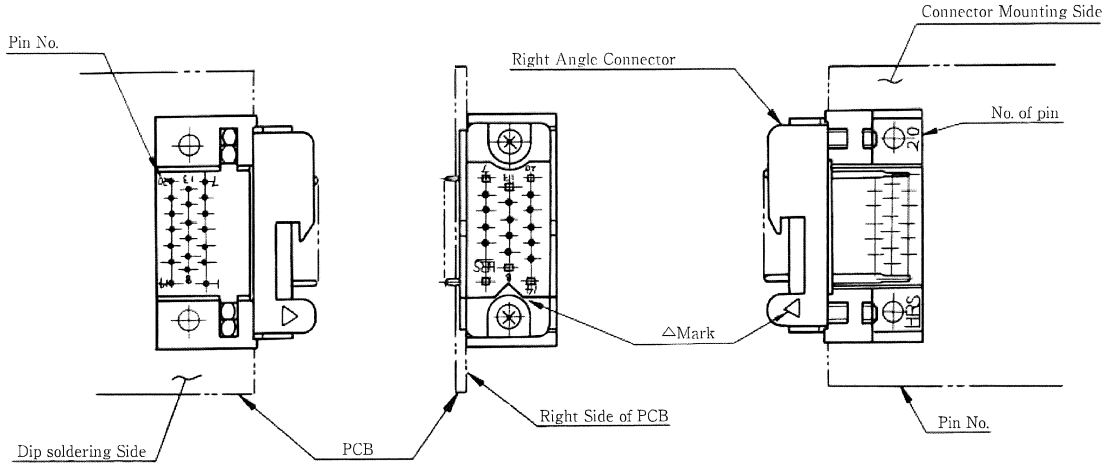

Fig. 2

Mav.1.2010 Copyright 2010 HIROSE ELECTRIC CO., LTD. All Rights Reserved.

The product information in this catalog is for reference only. Please request the Engineering Drawing for the most current and accurate design information.
All non-RoHS products have been discontinued, or will be discontinued soon. Please check the products status on the Hirose website RoHS search at www.hirose-connectors.com, or contact your Hirose sales representative.

3. When Top Touch Lock Type Plug Shell and Stopper Bracket are used with mounts on the right side of a PCB, not only the pin locations become opposite, but also the Lock Release Button and Cable Exit are upside down.
So, the Reverse Mount Stopper Bracket is conveniet in such case. (Fig. 3)

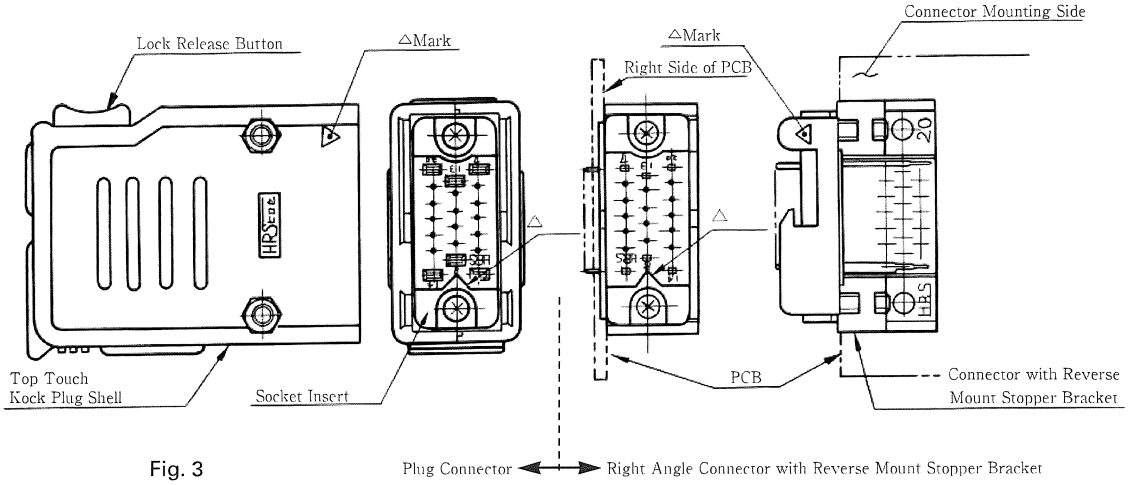

Fig. 3

4. M2.6 screws are recommended to mount Right Angle Dip Soldering Pin Connectors.
5. Please choose PC board thinner than 2.4mm.
6. In extracting plug connector, please pull it up straight out to prevent male pin from bending.
7. The standard plating is silver but gold is also an available option.
8. Note: The dip soldering pattern on PCB of Right Angle Type and Straight Type are different from each other.
9. Before using a solvent other than trichloroethylene, chlorosene, methanol, isopropanol, or ethyalchol to wash soldered connectors, contact out engineering department.

Mav.1.2010 Copyright 2010 HIROSE ELECTRIC CO., LTD. All Rights Reserved.

The product information in this catalog is for reference only. Please request the Engineering Drawing for the most current and accurate design information.
All non-RoHS products have been discontinued, or will be discontinued soon. Please check the products status on the Hirose website RoHS search at www.hirose-connectors.com, or contact your Hirose sales representative.

Mav.1.2010 Copyright 2010 HIROSE ELECTRIC CO., LTD. All Rights Reserved.

Recommended Dip Soldering Pattern

Unit: mm

(mm)

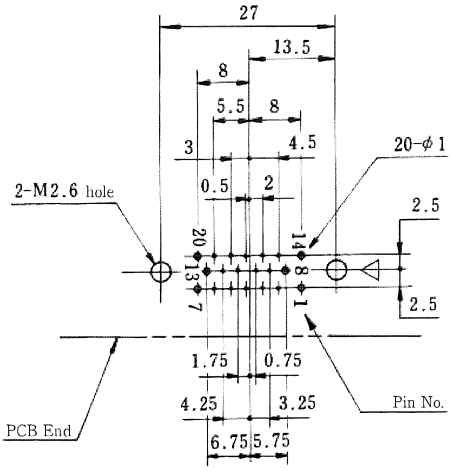

PR－1620B

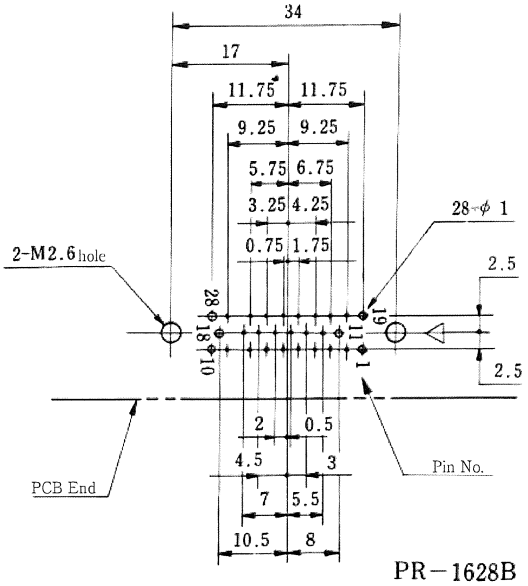

PR－1628B

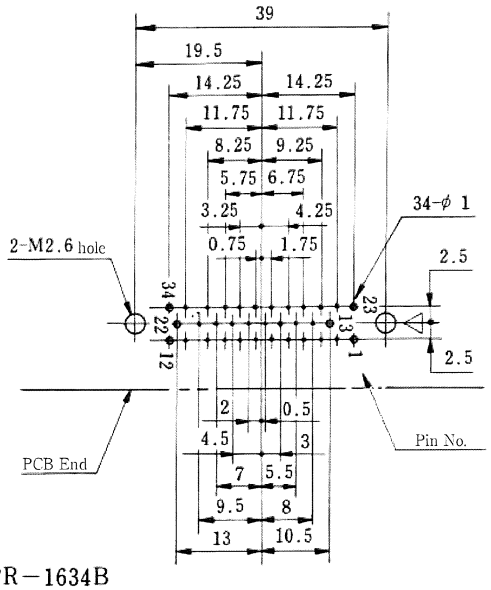

PR－1634B

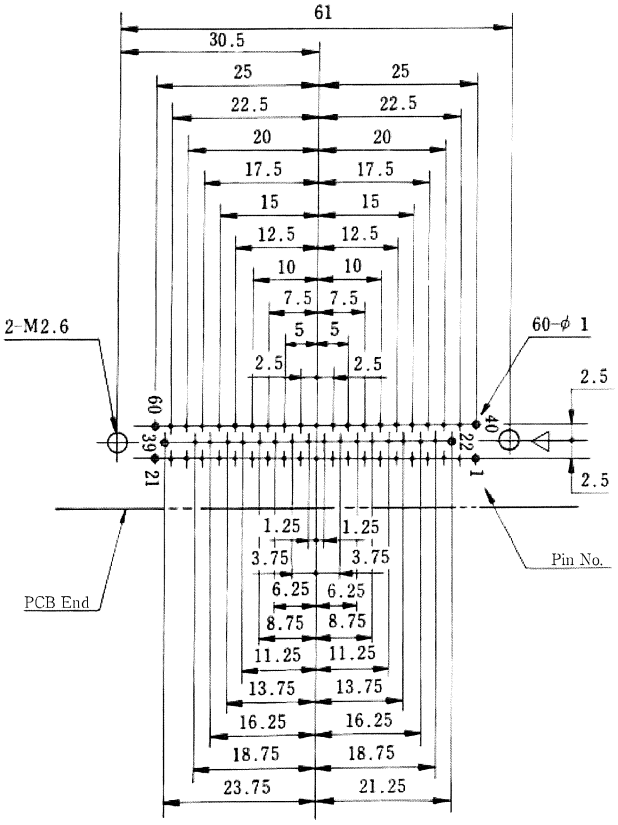

PR－1660B

Note 1. The triangle mark represents the position of the same mark on the connector unit.

2. Above pattern is shown view direction of the connector mounting side.

The product information in this catalog is for reference only. Please request the Engineering Drawing for the most current and accurate design information.
All non-RoHS products have been discontinued, or will be discontinued soon. Please check the products status on the Hirose website RoHS search at www.hirose-connectors.com, or contact your Hirose sales representative.

Recommended Mounting Pattern

Unit: mm

For insertion-soldering in the PCB, drill mounting holes as shown in the figure below.

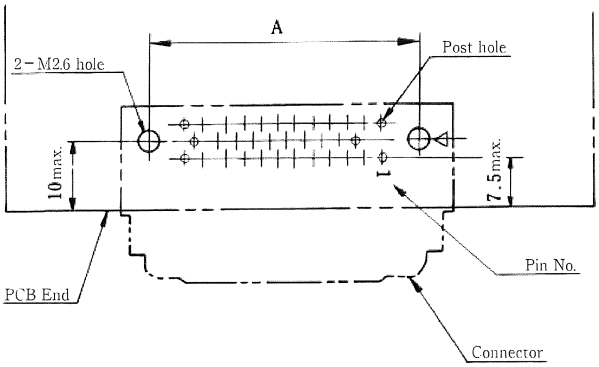

With top-touch-lock type stopper bracket

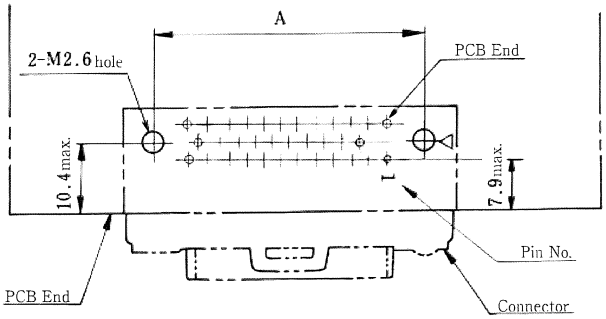

With side-lock type stopper bracket

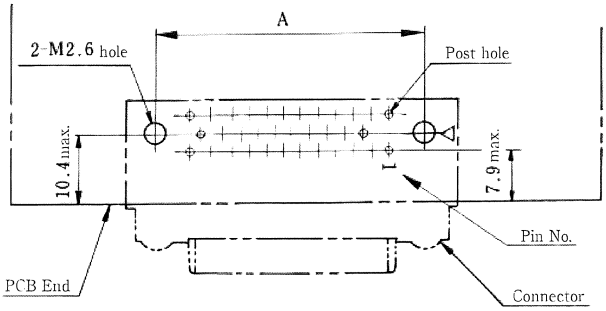

Connector Unit Type

No. of pin	A
20	27
28	34
34	39
60	61

The triangle mark represents the position of the same mark on the connector unit.
Above pattern is shown from view direction of the conector mounting side.

Mav.1.2010 Copyright 2010 HIROSE ELECTRIC CO., LTD. All Rights Reserved.

The product information in this catalog is for reference only. Please request the Engineering Drawing for the most current and accurate design information.
All non-RoHS products have been discontinued, or will be discontinued soon. Please check the products status on the Hirose website RoHS search at www.hirose-connectors.com, or contact your Hirose sales representative.

Function Chart 2

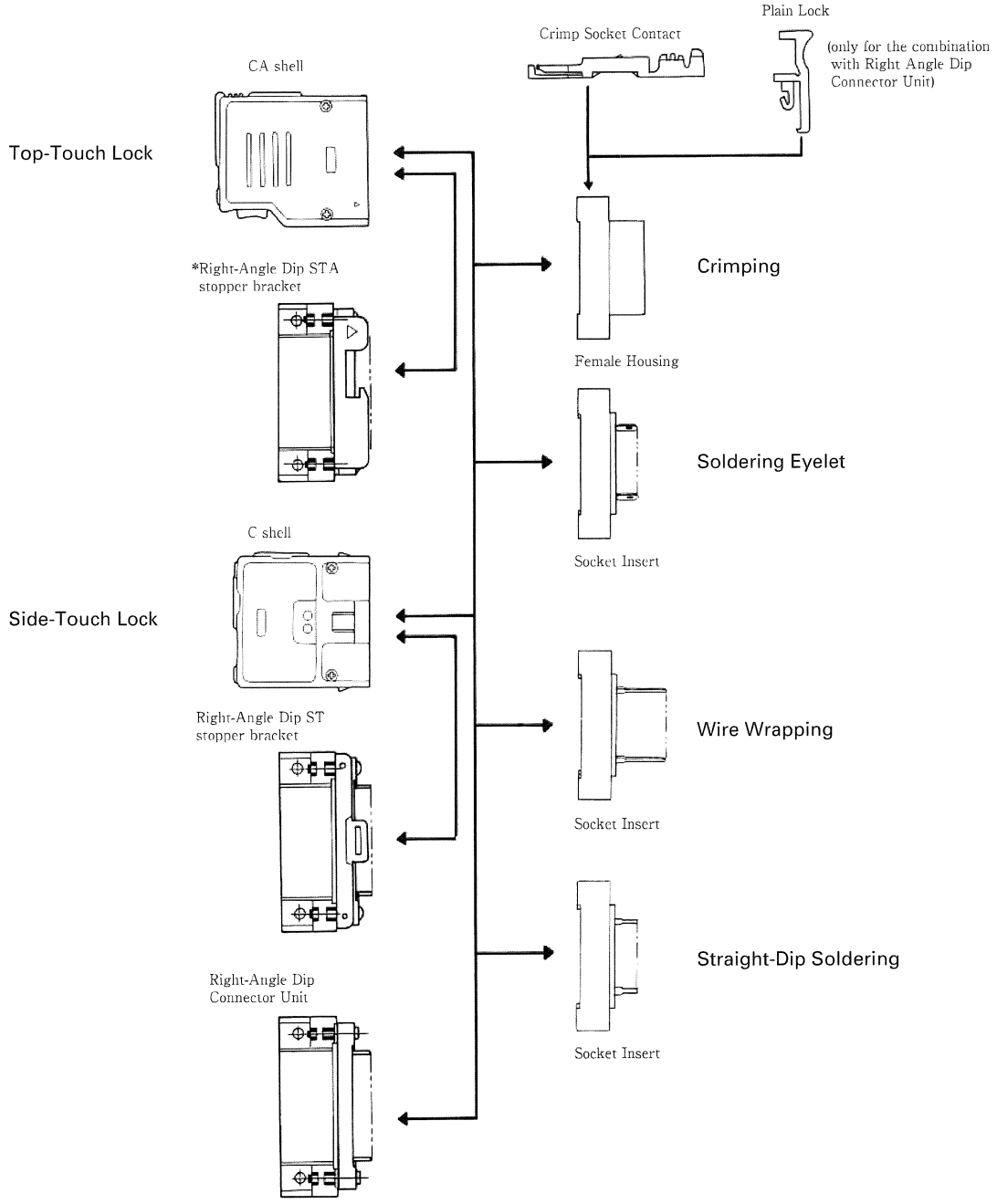

*Dust cap is available for STA stopper bracket.

Mav.1.2010 Copyright 2010 HIROSE ELECTRIC CO., LTD. All Rights Reserved.