REVISIONS				
ZONE	LTR	DESCRIPTION	DATE	APPROVED
	A	INITIAL RELEASE NUM: 70091-082		

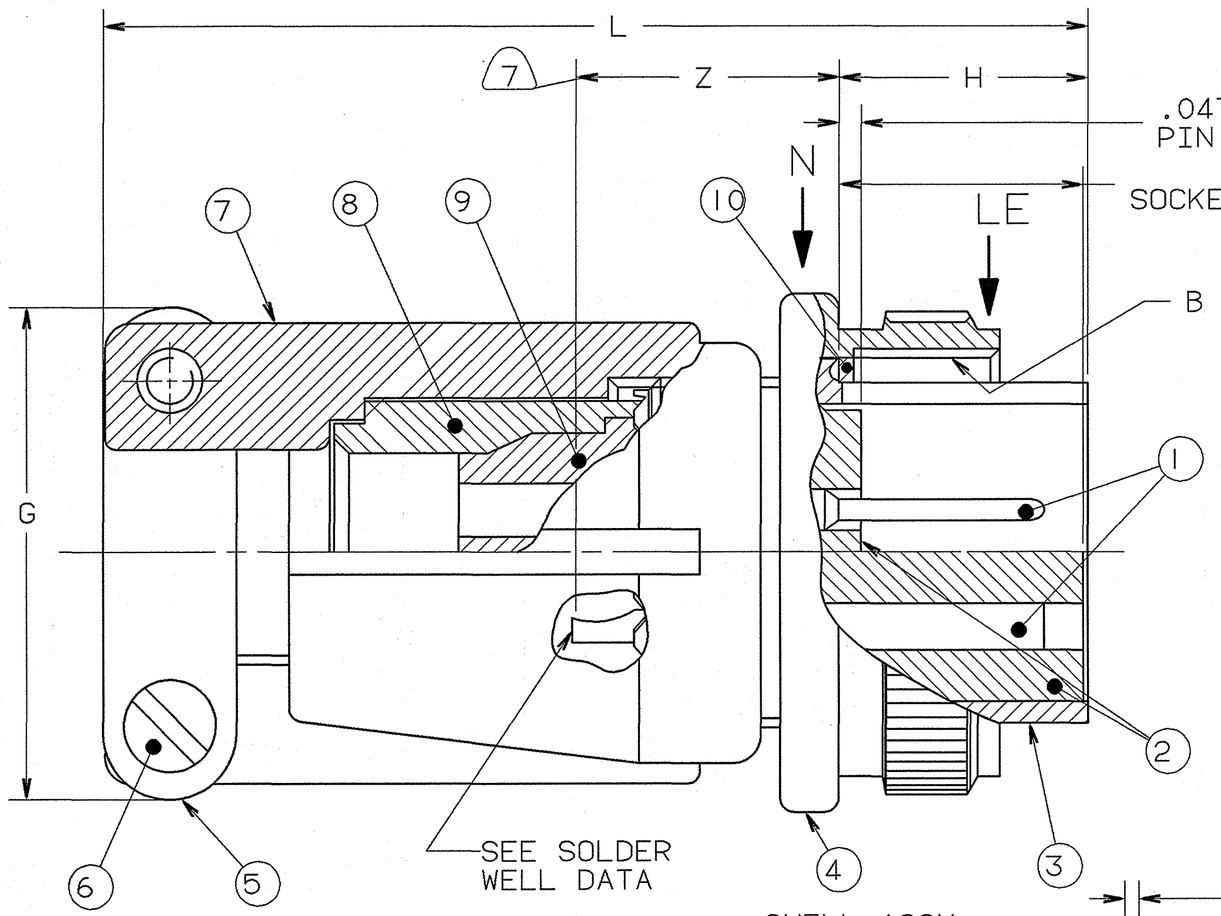

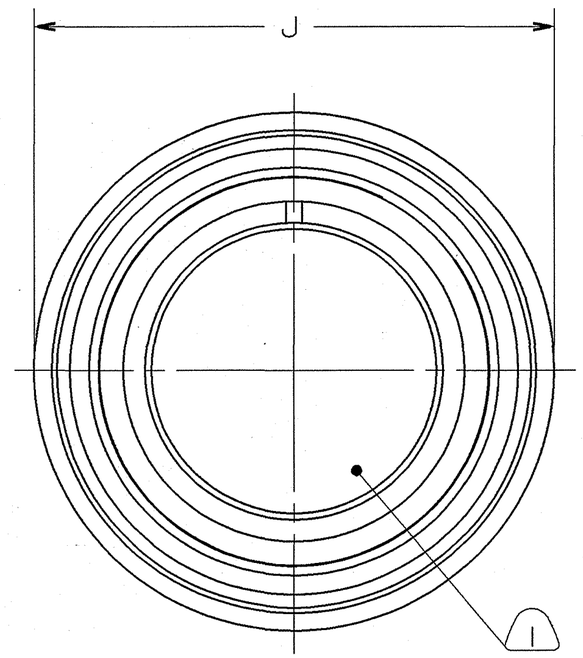

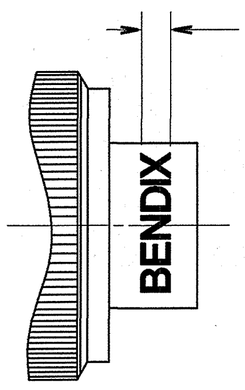

.062
BLACK INK STAMP
"BENDIX", DATE CODE (9-3895)
& MS NO.
OPPOSITE KEYWAY
PER 9-3856-5 APPROX
POSITION SHOWN
EXAMPLE:
BENDIX 9102 MS3106E20-12P (3)

PARTIAL VIEW AT LE
EXCEPT 10SL

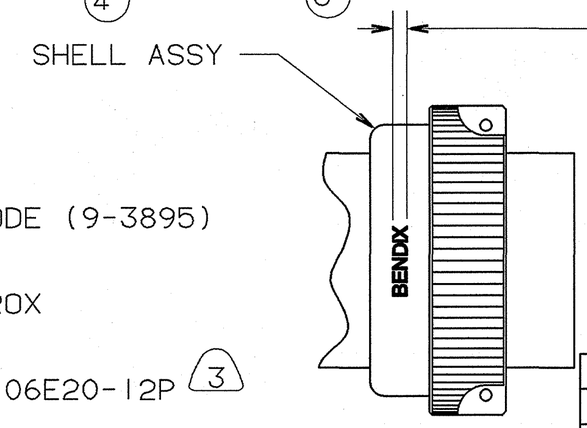

.062
BLACK INK STAMP (3)
"BENDIX", DATE CODE (9-3895)
& MS NO. PER
9-3856-5 IN APPROX
POSITION SHOWN
EXAMPLE:
BENDIX 9102 MS3106E10SL-3S
NUT MUST TURN FREELY
AFTER STAMPING

VIEW AT N
10SL ONLY

FIND NO.	QTY REQD.	FSCM NO.	PART NUMBER	DESCRIPTION	NOTE REF.
10	1		10-35957-XX1	GASKET	
9	1		10-60711/740-()	GROMMET	
8	1		10-584752-XX	SLEEVE	
7	1		10-584754-XX3	CLAMP NUT	
6	2		SEE COLUMN	SCREWS	
5	2		SEE COLUMN	CLAMP BAR	
4	SEE COLUMN			COUPLING	
3	1		SEE COLUMN	SHELL	
2	1		10-748XX-()	INSERT	9
1	SEE NOTE 2			CONTACTS	9

PARTS LIST

SPECIFICATIONS	SIGNATURES	DATES
MATERIAL SPEC. N/A	PREPARED MCELLIGOTT	01/03/91
	CHECKED	1-4-91
	MATERIAL	
PROCESS SPEC. SEE NOTE 10	APPROVED	1-21-91
	APPROVED	1-22-91
	1ST PART NO. 10-169658-***	

AMPHENOL CORPORATION
BENDIX CONNECTOR OPERATIONS
SIDNEY, N.Y.

CONNECTOR, ELECTRICAL PLUG, TYPE MS3106E — U

SIZE	FSCM NO.		REV.
C	77820	10-169658/690	A
SCALE NONE	WT.	REF 10-169608/650	SHEET 1 OF 2

UNLESS OTHERWISE SPECIFIED LINEAR DIMENSIONS ARE IN INCHES.
TOLERANCES: .XXX±.010, .XX ±.03, .X ±.1, ANGLES ±2°.
OTHER STANDARDS PER 9-3800 AND DOD-D-1000.
NOTE REF.= (XX)

COMPANY ID:	2
CODED/MS/CUST:	Y
INTERNAL:	N
LOTNO:	N
DATE CODE:	9-3895
SEE PRINT:	N

N/A
N/A
NEXT ASSEMBLY

SEE SHEET 2

NOTES:

THE USE OF THIS DOCUMENT IS UNLIMITED. HOWEVER, DOCUMENTS REFERENCED HEREON MAY CONTAIN LIMITED RIGHTS DATA.

COMPUTER GENERATED DRAWING. 000000001 01210 TAB.

1/11/91 15:18 • 91011 12:41 • PRELSE • 10-169658/690 A001

CLIP HERE

ASSEMBLY NUMBER	MS NO.	CLAMP BAR (2 REQ'D)	SCREW (2 REQ'D)	SHELL	COUPLING NUT	B THREAD CLASS 2B	C +.047 -.000	G MAX	H ±.005	J DIA MAX	L MAX	Z MAX
10-169658-()	NOT AVAILABLE											
10-169660-()	NOT AVAILABLE											
10-169661-()	3106E10SL-()	10-825942-176	10-816107	10-113488-11	(SHELL ASSY)	.6250-24UNEF	.531	.896	.531	.946	2.129	.607
10-169662-()	3106E12S-()	-176		10-37266-12	10-37265-12	.7500-20UNEF	.531	.896	.531	.995	2.129	.607
10-169663-()	3106E12-()	-176		-13	-13	.7500-20UNEF	.719	.896	.719	.995	2.129	.857
10-169664-()	3106E14S-()	-177		-14	-14	.8750-20UNEF	.531	1.021	.531	1.123	2.201	.607
10-169665-()	3106E14-()	-177		-15	-15	.8750-20UNEF	.719	1.021	.719	1.123	2.524	.857
10-169666-()	3106E16S-()	-178	10-816108	-16	-16	1.0000-20UNEF	.531	1.151	.531	1.250	2.201	.607
10-169667-()	3106E16-()	-178	10-816108	-17	-17	1.0000-20UNEF	.719	1.151	.719	1.250	2.524	.857
10-169668-()	3106E18-()	-179	10-101152-123	-18	-18	1.1250-18UNEF		1.242		1.333	2.596	
10-169670-()	3106E20-()	-180	10-101151-143	-20	-20	1.2500-18UNEF		1.499		1.461	2.654	
10-169672-()	3106E22-()	-180	10-101151-143	-22	-22	1.3750-18UNEF		1.499		1.588	2.654	
10-169674-()	3106E24-()	-181	10-101151-183	-24	-24	1.5000-18UNEF		1.781		1.715	2.885	
10-169678-()	3106E28-()	-181	10-101151-183	-28	-28	1.7500-18UNS		1.781		1.968	2.885	
10-169682-()	3106E32-()	-182	10-816124-2	-32	-32	2.0000-18UNS		2.087		2.209	2.943	
10-169686-()	3106E36-()	-183	10-816124-2	-36	-36	2.2500-16UN		2.281		2.463	2.943	
10-169690-()	3106E40-()	10-130511-343	10-130512-223	-40	-40	2.5000-16UN		2.581		2.718	3.068	

5

	SOLDER WELL DATA					THERMOCOUPLE	
CONTACT SIZE	0	4	8	12	16	12	16
WELL DIA	.469 +.005 -.003	.332 +.005 -.003	.209 +.004 -.002	.116 +.004 -.002	.078 +.004 -.002	.125 +.004 -.002	.094 +.004 -.002
WELL DEPTH +.031 -.000	.625	.625	.500	.375	.250	.250	.188

THERMOCOUPLE	
MATERIAL	IDENTIFICATION
CHROMEL	WHITE
ALUMEL	GREEN
IRON	BLACK
CONSTANTAN	YELLOW

8. PACKAGE PER PRODUCTION PROCESS SHEET.

7. FOR SIZE "0" CONTACT ONLY, INCREASE Z DIMENSION BY .312 FOR SHELL SIZES 8 THRU 40.

6. UNITS MEET THE REQUIREMENTS OF MIL-C-5015.

5. TO COMPLETE, ADD APPLICABLE INSERT ARRANGEMENT SUFFIX PER 9-2437.

4. FOR MATING CONNECTOR ASSEMBLIES, SEE DRAWING 10-169058/090 AND OTHERS.

3. SEE WORK ORDER FOR PERMISSIBLE ADDITIONAL OR ALTERNATE STAMPING.

2. SEE SEPARATE PARTS LIST FOR COMPONENT PART NUMBERS AND QUANTITIES.

1. FOR CONTACT SIZE, SPACING AND SERVICE RATING, SEE MIL-STD-1651.

12. ALL UNUSED GROMMET HOLES MUST BE FILLED SEALING PLUGS.

11. ALL LOCKWIRE HOLES ARE .045 DIA MIN.

10. PROCESS SPEC:
ASSY 9-3103-1
TEST 9-3106-5
9-2437, 9-3856-5, 9-3895

9. INSERTS AND CONTACTS ARE REMOVABLE.

NOTES:

THE USE OF THIS DOCUMENT IS UNLIMITED. HOWEVER, DOCUMENTS REFERENCED HEREON MAY CONTAIN LIMITED RIGHTS DATA.

SIZE	FSCM NO.		REV.
C	77820	10-169658/690	A
SCALE NONE	WT.	REF N/A	SHEET 2

COMPUTER GENERATED DRAWING

TAB.

1/11/91 15:18 • 91011 15:13 • PRELSE • 10-169658/690 A002