REVISIONS				
REV. SYM.	E.C.O. NUMBER	DESCRIPTION	BY DATE	APP'D DATE
1		ORIGINAL RELEASE	JWJ 4/8/02	RRR 4/8/02

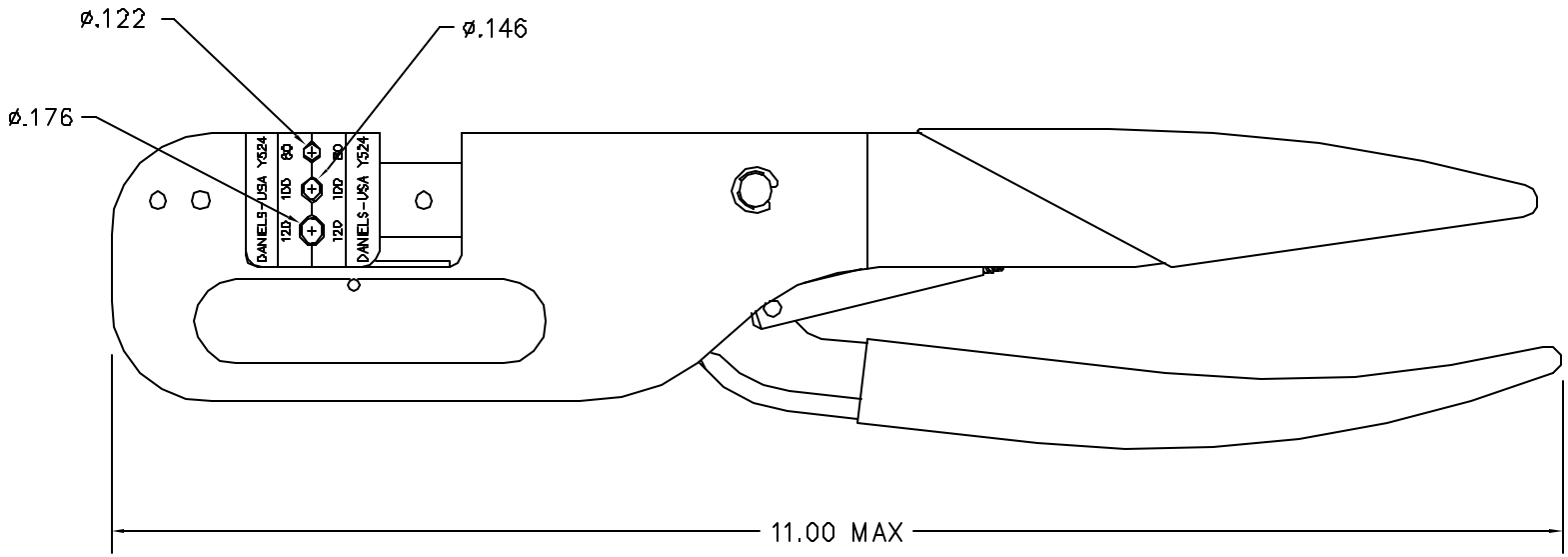

UNCONTROLLED DOCUMENT WILL NOT BE UPDATED

1. DIES ARE PINNED IN TOOL.

NOTES:

RESTRICTED & CONFIDENTIAL

CONFIDENTIAL PROPERTY OF DANIELS MANUFACTURING CORP. NOT TO BE DISCLOSED TO OTHERS, REPRODUCED OR USED FOR ANY OTHER PURPOSE, EXCEPT AS AUTHORIZED IN WRITING BY DANIELS MANUFACTURING. MUST BE RETURNED TO DANIELS MANUFACTURING CORP. ON COMPLETION OF ORDER OR OTHER PURPOSE FOR WHICH SENT.

DO NOT SCALE DRAWING

MATERIAL

HEAT TREAT

FINISH

ITEM	PART NO.	QTY.	DESCRIPTION/REMARKS

DRN.	J. JOYCE	DATE 4/8/02	DANIELS MANUFACTURING CORP. ORLANDO, FLORIDA CAGE 11851
CHK'D.	RRR	DATE 4/8/02	
APP'D.		DATE	TITLE CRIMP TOOL WITH Y524 DIE SET ENVELOPE DRAWING
APP'D.		DATE	WHERE USED:

SIZE	SCALE	CAD FILE NO	SHEET OF
B	NTS	HX4-524-ENV	1 1
POSTING		P/N HX4-524-ENV	REV. 1