Sanders

coaxial line oscillators

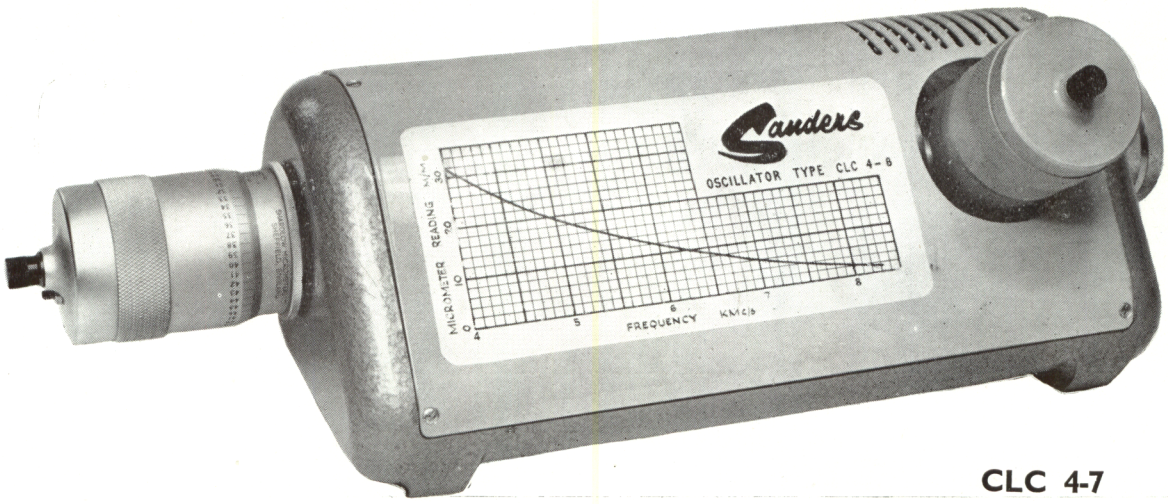

CLC 4-7

These oscillators employ low voltage plug in klystrons in coaxial line cavities to cover the frequency range 1.3 kMc/s to 12.0 kMc/s in three sections. The details of frequency coverage and type number are shown in the specifications.

Each oscillator is adjustable continuously over its frequency range by means of a mechanical system which has been designed to have a high reset accuracy and no backlash. An approximate calibration of the movement against frequency is provided by a graph on the front panel of the instrument, but as each instrument is usually supplied with the valve fitted an individual calibration of the system is supplied to an accuracy of $\pm 0.1\%$

Cessation of oscillation and mode hysteresis have been eliminated by ensuring a positive contact between the valve and the cavity and by using an anodised aluminium non-contacting plunger to vary the cavity size, which is one half a wavelength long. The contacts are designed so that valves can be changed easily and oscillation obtained over the whole frequency range. After an initial warm up period of about 20 minutes the frequency stability is better than 1 part in 10^6.

The R.F. output is taken through an uncalibrated set-level piston attenuator into an 18-in. length of 50 ohm coaxial cable terminated by a type N coaxial plug. This allows the oscillators to be coupled to any waveguide size by using a coaxial-to-waveguide transformer similar to the X16/C.

specifications

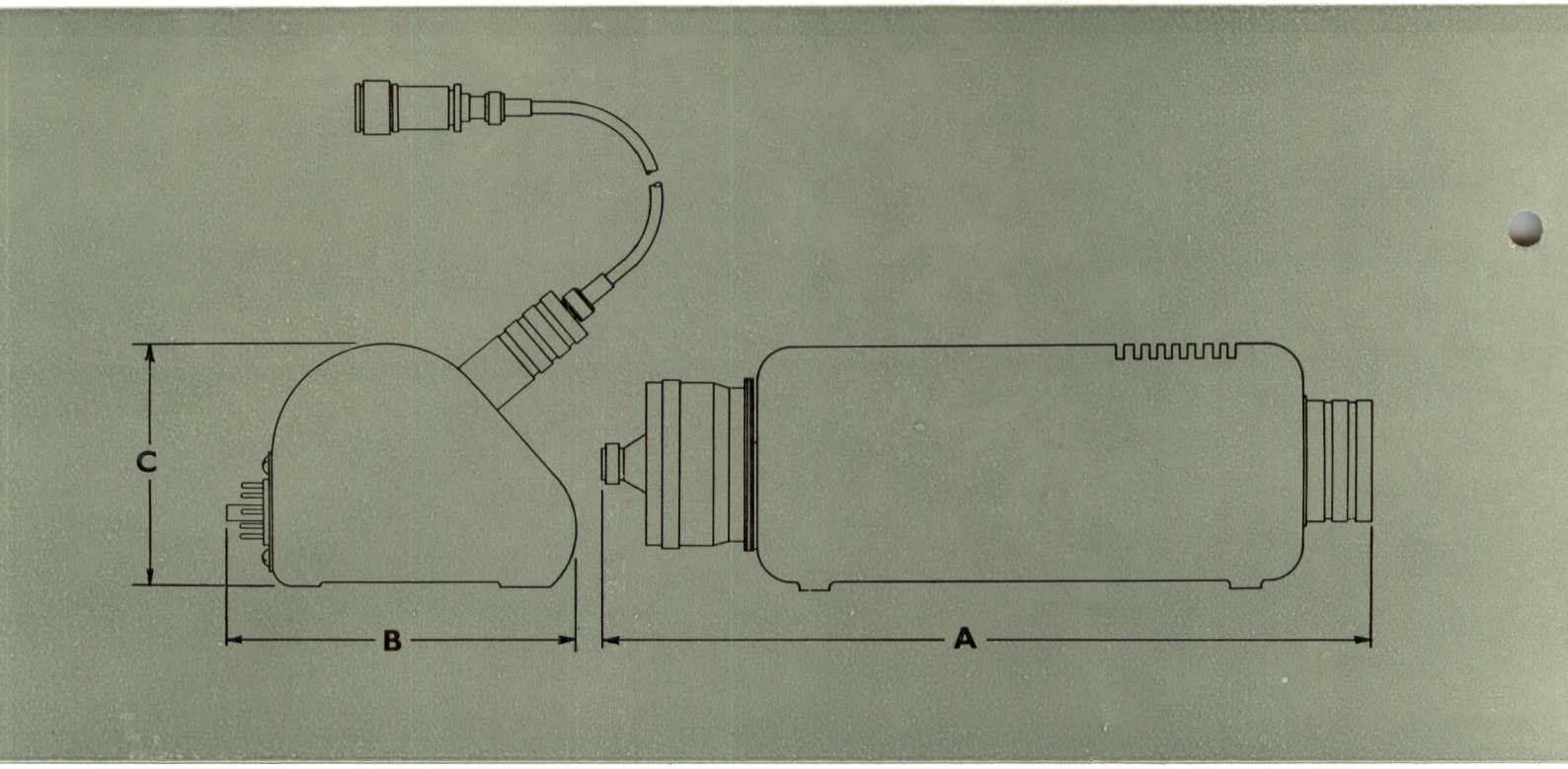

Type No.	Valve Used	Frequency Range in kMc/s	Reset Accuracy in Mc/s	Calibration Accuracy	Variation Power Output at N Plug in mW.	DIMENSION			Weight
						A	B	C	
CLC 7-12	CV2346	7 to 12	better than ± ¼	0.1%	20 to 5	12″ 30.5 mm.	5¼″ 13.3 mm.	5″ 12.7 mm.	9lb. 3oz. 4.17 kgrm.
CLC 4-7	CV2346	4 to 7	better than ± ¼	0.1%	20 to 5	15″* 38 mm.	8¼″* 20.8 mm.	8″* 20.3 mm.	12lb.* 5.44 kgrm.
CLC 2-4	CV2116	1.3 to 4.5	better than ± ¼	0.1%	† 20 to 5	20″ 50.8 mm.	8¼″ 20.8 mm.	8″ 20.3 mm.	16lb. appx. 7.3 kgrm

Finish: (a) Case—Light grey stove enamel hammer.
(b) Front Panel—Light grey BS381C tint 631.

† This is a minimum figure. Details of final test figures will be published shortly.

* These dimensions may be subject to slight alteration in the future.

W. H. SANDERS (ELECTRONICS) LIMITED

Gunnels Wood Road, Stevenage, Herts. Tel.: Stevenage 981. Grams and Cables: Sandelect, Stevenage. Telex: 82159 Sanders Stev.
London Office: 49 Conduit Street, London, W.1. Telephone: Regent 3534. Telegrams and Cables: Santronic, London
German Associate Company: Sanders Electronics G.M.B.H., Eysseneckstrasse 19, Frankfurt-am-Main. Telephone: Frankfurt 593368
Telegrams: Santron. Telex: Frankfurt 4—12970

PRINTED IN ENGLAND

Sanders

klystron mount KM.723



This component consists of a short-circuited section of waveguide size 16 fitted with a mount to support a valve base which is wired for use with klystron type 723 AB. (CV 1795). Connections from the base are brought out into a 3 ft. length of cable, which is terminated with an octal plug.

The position of the klystron probe with respect to the short circuit is arranged to give optimum performance over the frequency range 8.5 to 9.5 kMc/s.

W. H. SANDERS (ELECTRONICS) LIMITED

specifications

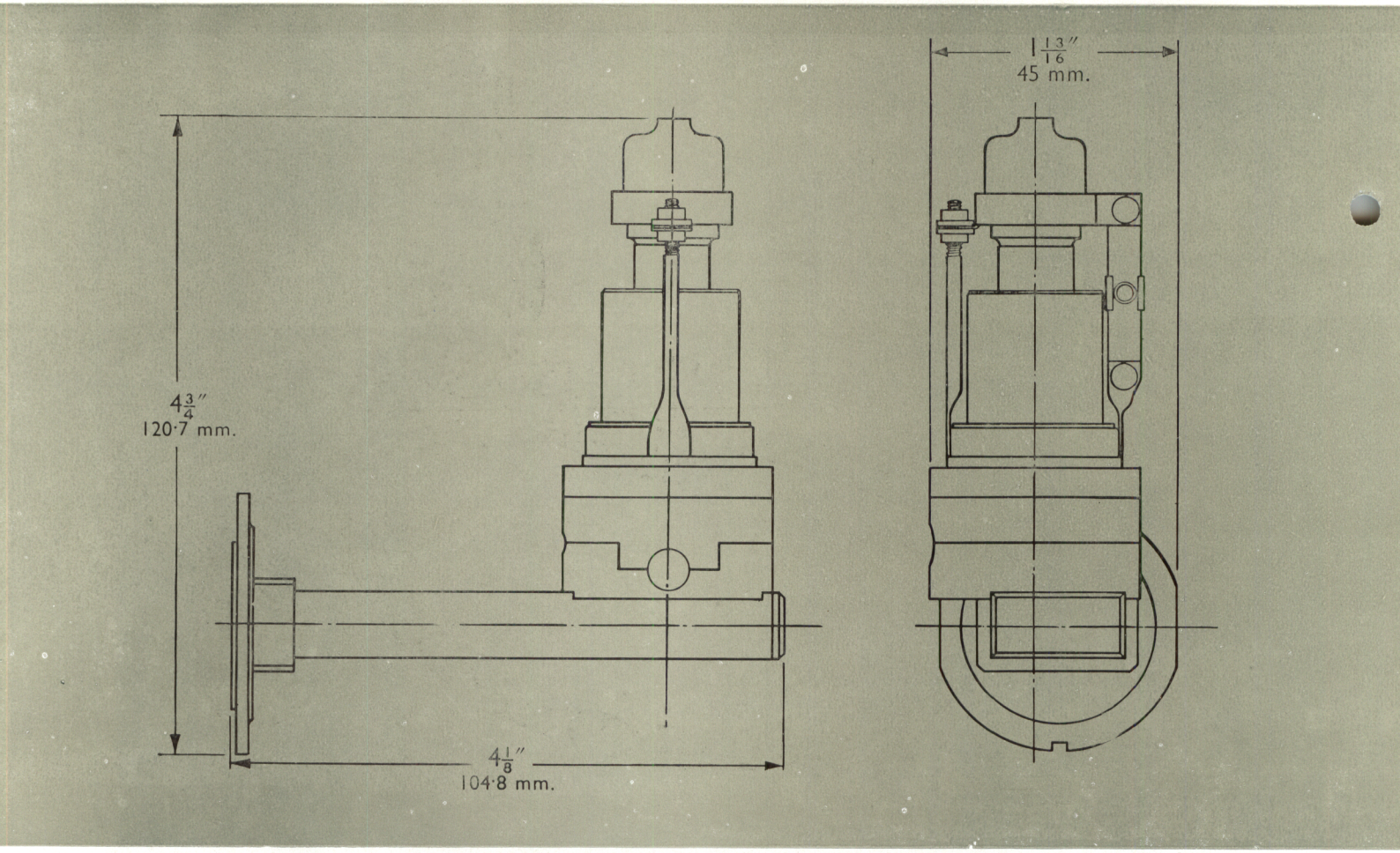

PERFORMANCE

Frequency coverage:	8.5—9.5 kMc/s.
Finish:	Grade I Instrument finish
Flange:	Z830004. Alternative flanges can be fitted to order, for details see flange data sheet.

Weight without cable or klystron: 12 oz. (340 grms.)

W. H. SANDERS (ELECTRONICS) LIMITED

Gunnels Wood Road, Stevenage, Herts. Tel.: Stevenage 981. Grams and Cables: Sandelect, Stevenage. Telex: 82159 Sanders Stev.
London Office: 49 Conduit Street, London, W.1. Telephone: Regent 3534. Telegrams and Cables: Santronic, London
German Associate Company: Sanders Electronics G.M.B.H., Eysseneckstrasse 19, Frankfurt-am-Main. Telephone: Frankfurt 593368
Telegrams: Santron. Telex: Frankfurt 4—12970

PRINTED IN ENGLAND

Sanders

stub tuners

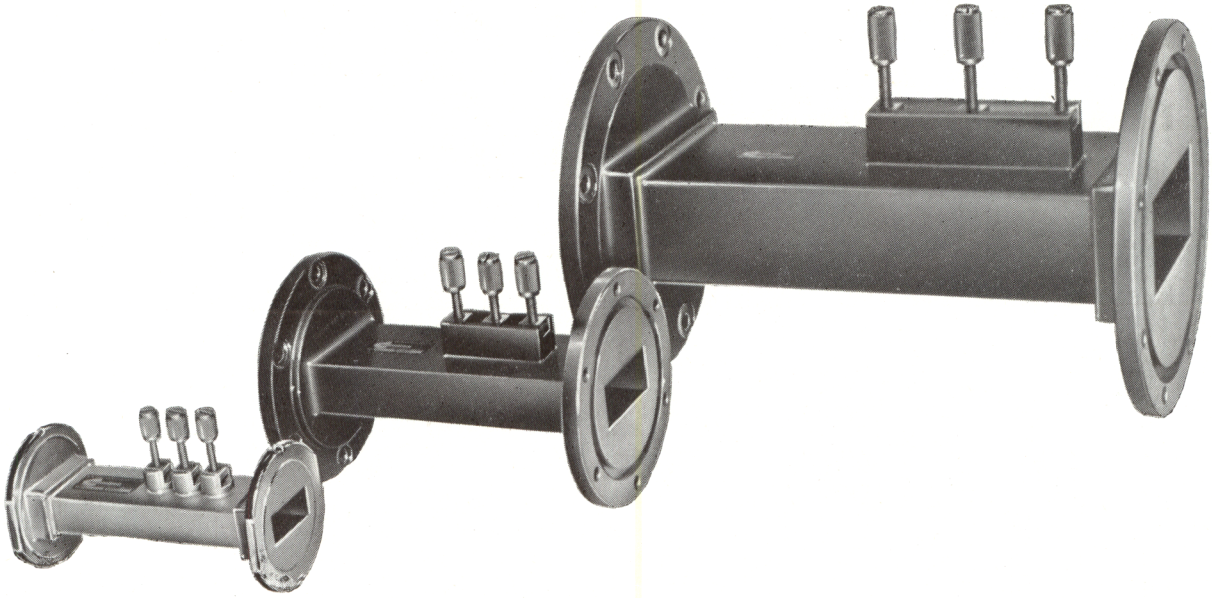

These units are short sections of waveguide having three screws penetrating the broad wall of the guide, and spaced approximately three eighths of a mean guide wavelength apart. The screws are rigidly held by a spring system which ensures constant setting during operation.

Stub tuners are widely used in the microwave laboratory where a quick method of matching is required.

W. H. SANDERS (ELECTRONICS) LIMITED

specifications

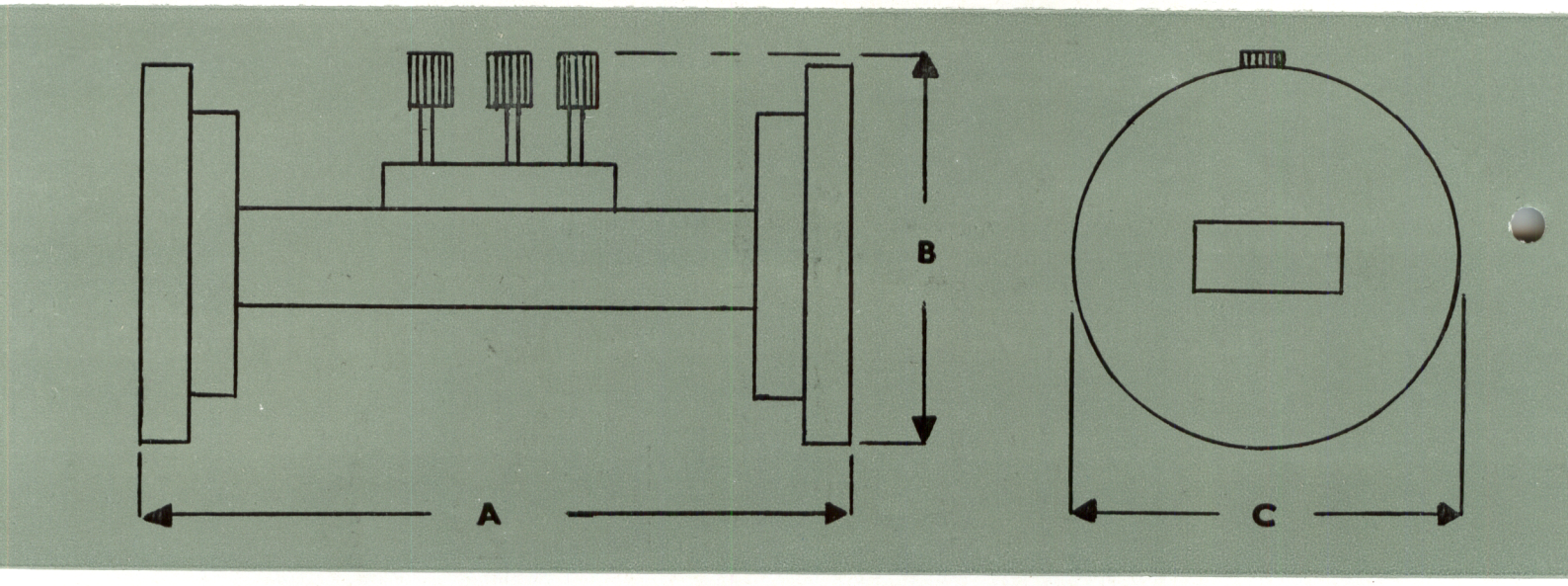

Wave Guide Size	Type No.	Operating Frequency in kMc/s	Dimensions A	Dimensions B	Dimensions C	Weight	flanges
18	ST 18	12.0-18.0	$2\frac{5}{8}$″ 66.7 mm.	$1\frac{5}{8}$″ 41.3 mm.	$1\frac{5}{16}$″ 33.3 mm.	4oz. 113.4 grm.	Z830030
16	ST 16	8.2-12.4	$3\frac{3}{4}$″ 95.25 mm.	2″ 50.8 mm.	$1\frac{3}{4}$″ 44.5 mm.	8oz. 226.8 grm.	Z830004
15	ST 15	7.5-10.0	4″ 101.6 mm.	2″ 50.8 mm.	$1\frac{7}{8}$″ 47.6 mm.	10oz. 285.5 grm.	Z830034
14	ST 14	5.85-8.0	$4\frac{3}{4}$″ 120.7 mm.	$3\frac{1}{8}$″ 79.4 mm.	$3\frac{1}{8}$″ 79.4 mm.	$1\frac{3}{4}$lb. 794 grm.	Z830038
12	ST 12	3.95-5.85	$5\frac{3}{4}$″ 146 mm.	$3\frac{5}{8}$″ 92 mm.	$3\frac{5}{8}$″ 92 mm.	2lb. 10oz. 1.19 kgrm.	Z830042
10	ST 10	2.60-3.95	8″ 203.2 mm.	$5\frac{5}{16}$″ 134.9 mm.	$5\frac{5}{16}$″ 134.9 mm.	6lb. 2.72 kgrm.	Z830010

Finish : Grade I Instrument Finish.

Flanges : Details of all flanges fitted are shown on flange data sheet.

Sanders

W. H. SANDERS (ELECTRONICS) LIMITED

Gunnels Wood Road, Stevenage, Herts. Tel.: Stevenage 981. Grams and Cables: Sandelect, Stevenage. Telex: 82159 Sanders Stev.
London Office: 49 Conduit Street, London, W.1. Telephone : Regent 3534. Telegrams and Cables : Santronic, London
German Associate Company : Sanders Electronics G.M.B.H., Eysseneckstrasse 19, Frankfurt-am-Main. Telephone: Frankfurt 593368
Telegrams : Santron. Telex : Frankfurt 4—12970

PRINTED IN ENGLAND

Sanders

variable impedance

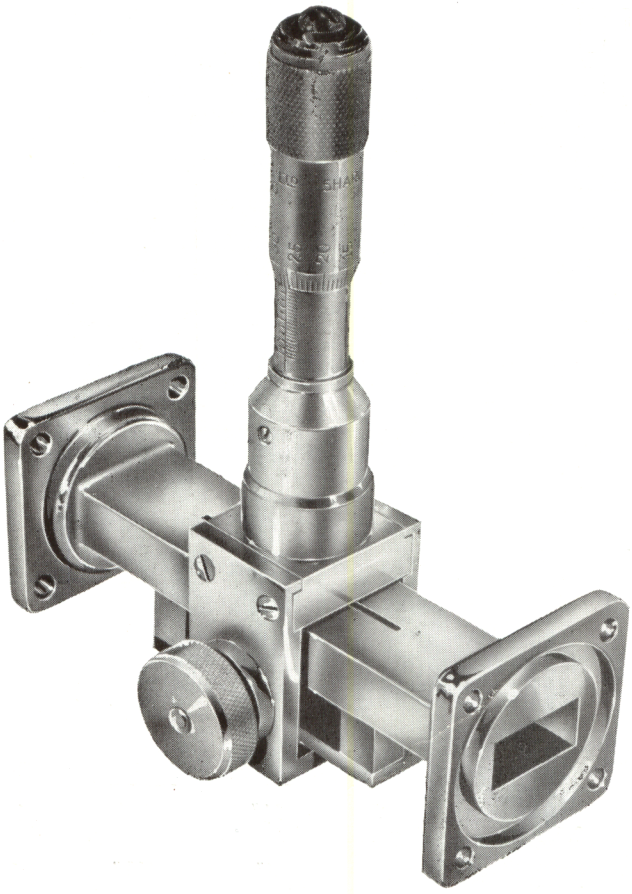

VI 18

A complete range of impedance variation is provided in these instruments over the frequency range of the waveguide size by means of an adjustable, capacitive, probe.

The probe penetrates through the broad face of the waveguide, and moves in a longtuninal slot. The slot is carefully centred along the waveguide, and is so dimensioned as to be free from resonances, and radiation.

The degree of penetration of the probe into the waveguide is adjustable by means of a micrometer assembly. This assembly is mounted on a sliding block, which incorporates a tongue of metal protruding into the longitudinal slot in the waveguide and so shielding the probe up to the point of protrusion into the waveguide.

A smooth movement of the block is obtained by driving it over greater than one half of a guide wavelength at the minimum operating frequency by a friction drive bearing on the underside of the waveguide.

specifications

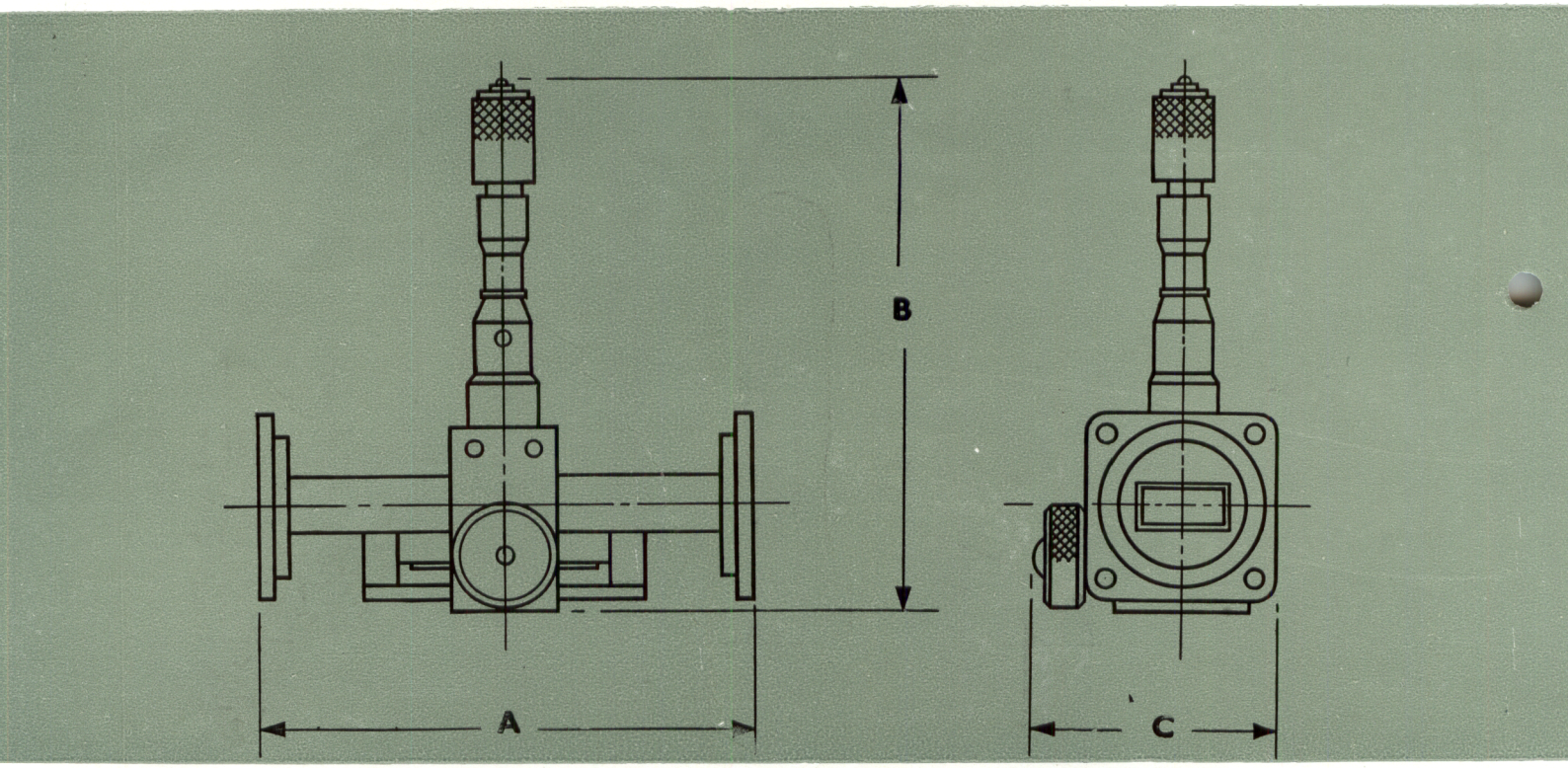

Wave Guide Size	Type No.	Frequency Range in kMc/s	Probe diameter	Probe Penetration	Dimensions A	Dimensions B	Dimensions C	Weight	Flanges*
WG 18	VI 18	12.0—18.0	0.025″ 0.635 mm.	0.295″ 7.5 mm.	3½″ 88.9 mm.	3⅞″ 98.4 mm.	1 9/16″ 39.6 mm.	9½ oz. 269.5 grm.	Z830030 both ends
WG 16	VI 16	8.2—12.4	0.050″ 1.270 mm.	0.400″ 1.01 mm.	6″ 152.4 mm.	4 15/16″ 125 mm.	2¼″ 57 mm.		Z830003 and Z830004
WG 15	VI 15	7.0—10.0	0.050″ 1.270 mm.	0.488″ 1.24 mm.	6½″ 165 mm.	5 1/64″ 127.5 mm.	2½″ 63.5 mm.		Z830033 and Z830034
WG 14	VI 14	5.0 - 8.0	0.050″ 1.270 mm.	0.613″ 1.56 mm.	7″ 178 mm.	7″ 178 mm.	3⅜″ 85.7 mm.		Z830037 and Z830038

Finish: Grade I Instrument Finish.

Flanges: Alternative British or American Flanges fitted to order.

*Flanges on Flange data sheet.

Sanders

W. H. SANDERS (ELECTRONICS) LIMITED

Gunnels Wood Road, Stevenage, Herts. Tel. Stevenage 981 (6 lines). London Office: 49 Conduit Street, London W.1. Tel. Regent 3534

Printed in England

Sanders

directional couplers

section D



Type DC

The coupling elements are of the double cruciform type combining the directional properties of the cruciform inductive slot coupler with the matching properties of the quarter wavelength spaced elements. In addition, there is a statistical probability that the directivity will be higher than that in the single element case. The use of two elements in this form also gives a considerable increase in the power handling capacity of the coupler which becomes close to the limiting value for the waveguide. The stability of attenuation obtainable with Directional Couplers is of great value in some applications. The attenuation of the forward component of the waveguide power is constant to better than 0.2 db for any terminating impedance of the main guide, within the 2:1 impedance circle. The D.C. type coupler is primarily of use for power monitoring in waveguide measuring benches and in high power C.W. and pulse systems. It may also be used after calibration as an attenuation reference standard and in other applications calling for stable and accurately known attenuation. Its use in waveguide bridge networks, or as a reflectometer, is not recommended as such systems require directitives of more than 40db in order to achieve reasonable accuracy.

specifications

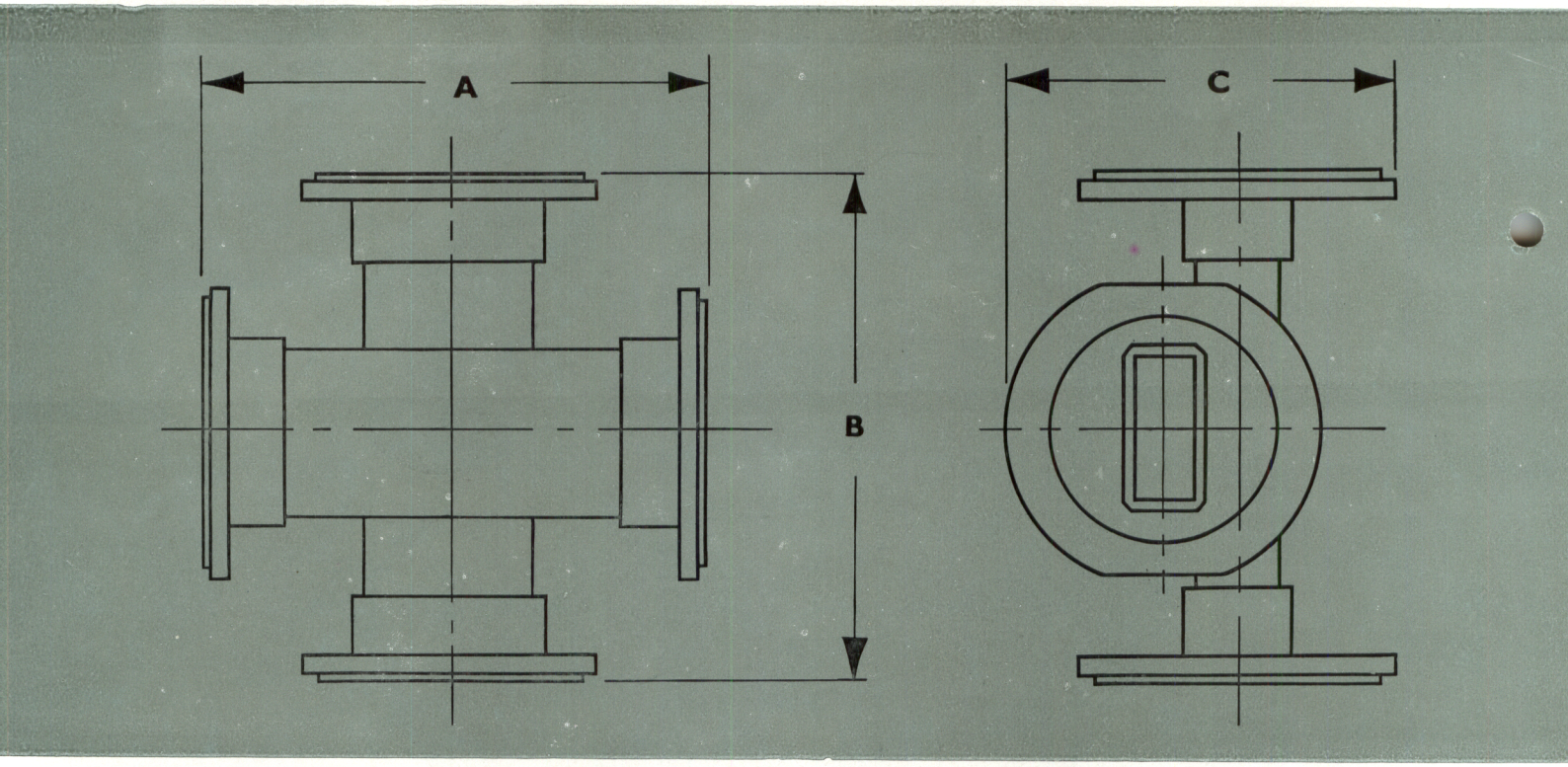

Wave Guide Size	Type No.	Coupling in db	Directivity in db	Frequency coverage kMc/s	V.S.W.R.	Dimensions A	Dimensions B	Dimensions C	Weight	Flanges
WG 18	DC 18/30	30	About 12	12.4-18.0	0.97: 1	$2\frac{3}{16}$" 55.5 mm.	$2\frac{3}{16}$" 55.5 mm.	$2\frac{3}{16}$" 55.5 mm.	$6\frac{1}{4}$oz. 77 grm.	Z830030
WG 16	DC 16/20	20	,, 27	8.2-10.5	0.97: 1	3" 76.2 mm.	3" 76.2 mm.	$2\frac{3}{8}$" 60.3 mm.	12oz. 340.2 grm.	Z830004
WG 16	DC 16/30	30	,, 27	8.2-10.5	0.97: 1	3" 76.2 mm.	3" 76.2 mm.	$2\frac{3}{8}$" 60.3 mm.	12oz. 340.2 grm.	Z830004
WG 16	DC 16/40	40	,, 27	8.2-10.5	0.97: 1	3" 76.2 mm.	3" 76.2 mm.	$2\frac{3}{8}$" 60.3 mm.	12oz. 340.2 grm.	Z830004
WG 15	DC 15/20	20	,, 27	7.0-9.5	0.97: 1	$4\frac{1}{2}$" 114.3 mm.	$4\frac{1}{2}$" 114.3 mm.	$2\frac{1}{2}$" 63.5 mm.	22oz. 623.7 grm.	Z830034
WG 15	DC 15/30	30	,, 27	7.0-9.5	0.97: 1	$4\frac{1}{2}$" 114.3 mm.	$4\frac{1}{2}$" 114.3 mm.	$2\frac{1}{2}$" 63.5 mm.	22oz. 623.7 grm.	Z830034
WG 14	DC 14/20	20	,, 27	5.85-7.8	0.97: 1	$4\frac{7}{16}$" 112.7 mm.	$4\frac{7}{16}$" 112.7 mm.	$3\frac{7}{8}$" 98.4 mm.	3lb. 1.36 kgrm.	Z830038
WG 14	DC 14/30	30	,, 27	5.85-7.8	0.97: 1	$4\frac{7}{16}$" 112.7 mm.	$4\frac{7}{16}$" 112.7 mm.	$3\frac{7}{8}$" 98.4 mm.	3lb. 1.36 kgrm.	Z830038
WG 12	DC 12/20	20	,, 27	3.95-5.3	0.97: 1	6" 152.4 mm.	6" 152.4 mm.	5" 127 mm.	4lb. 10oz. 2.1 kgrm.	Z830042
WG 12	DC 12/30	30	,, 27	3.95-5.3	0.97: 1	6" 152.4 mm.	6" 152 4 mm.	5" 127 mm.	4lb. 10oz. 2.1 kgrm.	Z830042

Variation in Coupling: Less than ± 2 db variation from nominal value over the frequency range for each wave guide size.

*Flanges: Details of all flanges fitted are shown on flange data sheet. Alternative British or American flanges fitted to order.

Finish: Grade I Instrument Finish.

W. H. SANDERS (ELECTRONICS) LIMITED

Gunnels Wood Road, Stevenage, Herts. Tel.: Stevenage 981. Grams and Cables: Sandelect, Stevenage. Telex: 82159 Sanders Stev.

London Office: 49 Conduit Street, London, W.1. Telephone : Regent 3534. Telegrams and Cables : Santronic, London

German Associate Company : Sanders Electronics G.M.B.H., Eysseneckstrasse 19, Frankfurt-am-Main. Telephone: Frankfurt 593368

Telegrams : Santron. Telex : Frankfurt 4--12970

PRINTED IN ENGLAND

crystal detectors

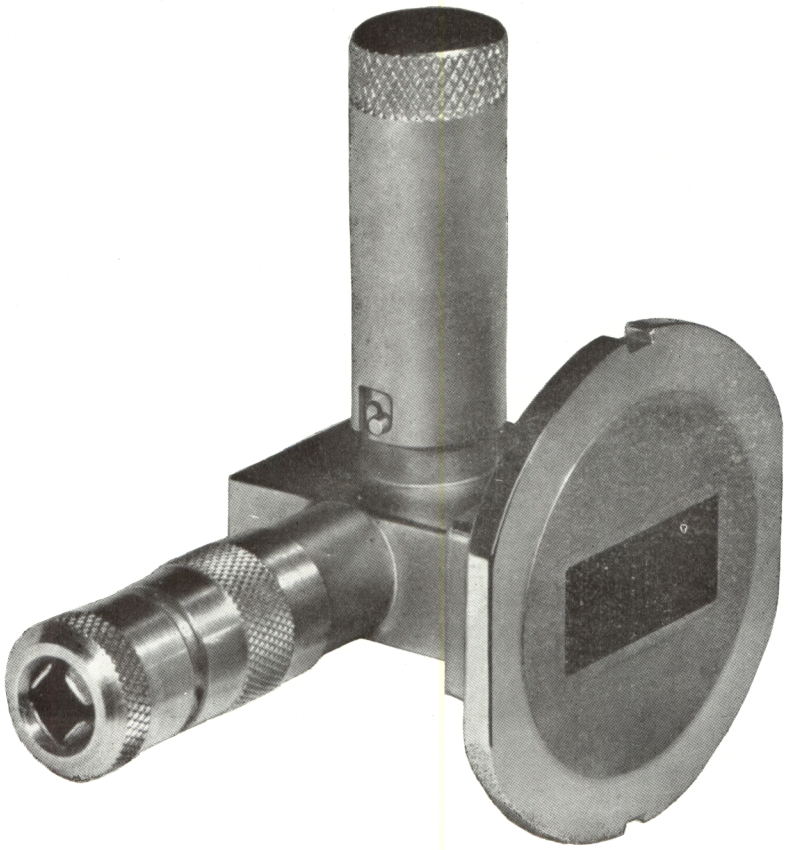

CD 16

These components provide a fully screened coaxial connector output from a bar post transition to a coaxial crystal. This crystal is the CV2154 or CV2155 for waveguide sizes WG 10 to WG 16 and the IN26 for waveguide sizes above this.

The detector is a modification of the waveguide crystal mixer Type CM, in which general properties of the waveguide to co-axial transistion have been retained but the flange and solder tag have been replaced by a fixing for coaxial cable.

In the case of WG 16 the mount is fixed tuned but for all other waveguide sizes the system is tuneable by a moveable short circuit.

The crystals used with this component have a video impedance at very low level which is approximately constant with a value between 10,000 and 20,000 ohms. When working into this value of impedance, therefore, the crystal will achieve its maximum efficiency as a converter of R.F. energy to DC energy. Due to the high crystal video impedance at low level, the detector is unsuitable for use with short pulses, as the capacity of the coaxial cable, together with the high load impedance required for good efficiency, would severely restrict the video frequency pass band. The detector may be successfully operated at

higher R.F. power levels into a meter or galvonometer. It is particularly useful, however, when feeding into a high gain amplifier having an input impedance of about 10,000 to 20,000 ohms. Under these conditions the screening provided by the coaxial cable, together with the high power transfer efficiency achieved by matching the crystals into its optimum load, makes it possible to obtain a very high sensitivity of R.F. detection. In addition, the crystal rectification is quite accurately square law at low levels.

This component is not recommended for use as a crystal mixer, except in those cases where the Type CM and a head amplifier cannot satisfactorily be operated.

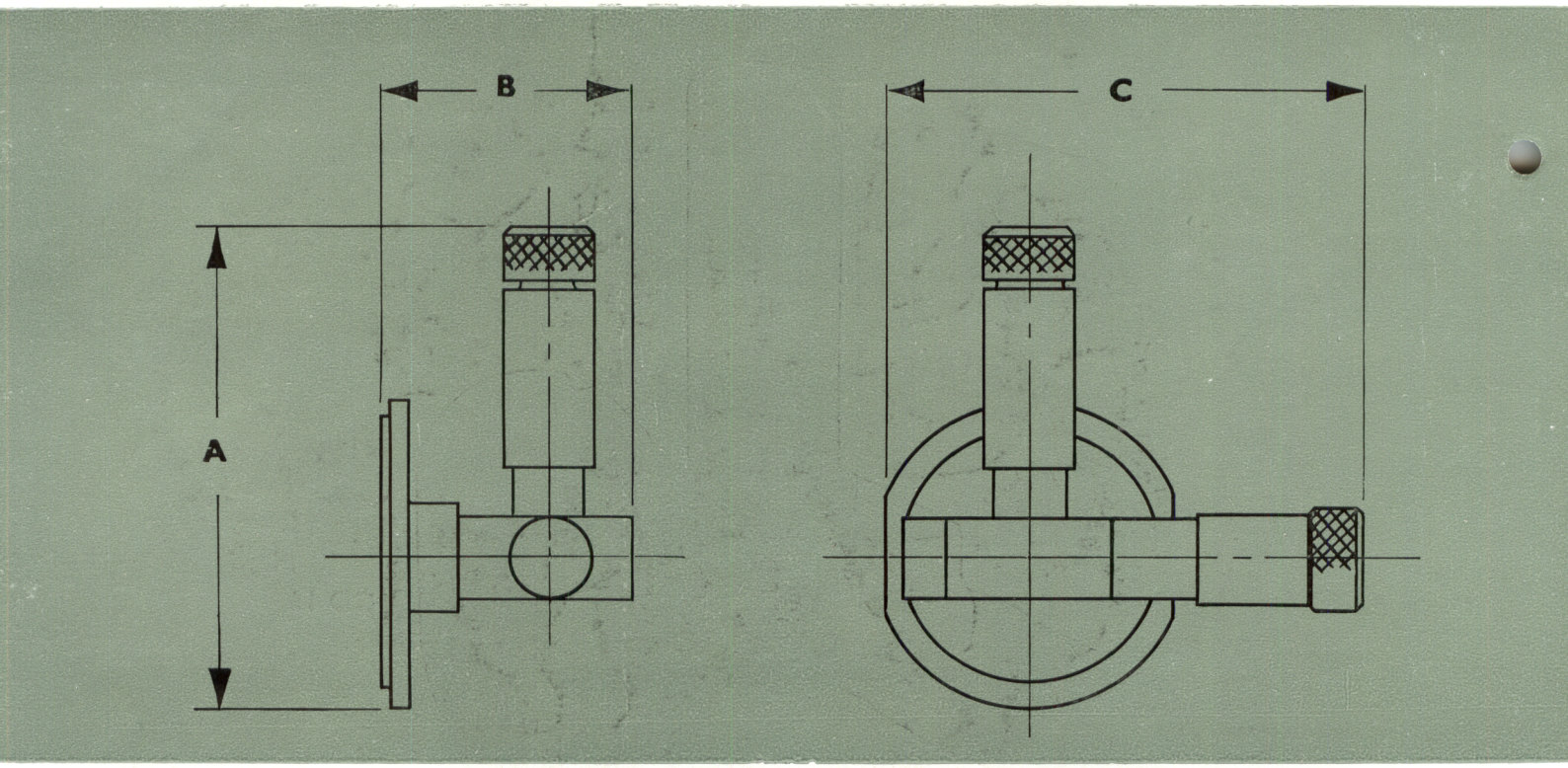

SPECIFICATIONS

Wave Guide Size	Type No.	Crystal Used	Frequency Coverage in kMc/s	V.S.W.R.	Dimensions A	Dimensions B	Dimensions C	Weight	Flanges
WG 18	CD 18	IN26	12.0—18.0	Approx. 0.5: 1	2½″ 63.5 mm.	4⅜″	2″ 50.8 m.m.	5 oz. 142 grm.	Z830030
WG 16	CD 16	CV2154 CV2155	9.5—12.0	Approx. 0.5: 1	2⅞″ 73 mm.	1⅝″ 41.3 mm.	2⅞″ 73 m.m.	6 oz. 170.1 grm.	Z830004
WG 15	CD 15	CV2154 CV2155	7.0—10	Approx. 0.5: 1	3″ 76 mm.	6″ 15.2 mm.	2⅜″ 62.5 m.m.	1 lb. approx. 454 grm.	Z830034
WG 14	CD 14	CV2154 CV2155	5.0 – 7.8	Approx. 0.5: 1	3⅝″ 92 mm.	9″ 229 mm.	3¾″ 95 mm.	32 oz. 908 grm.	Z830038
WG 12	CD 12	CV2154 CV2155	3.9—5.85	Approx. 0.5: 1	4″ 101.6 mm.	10¼″ 260 mm.	4¼″ 108 mm.	56 oz. 1590 grm.	Z830042

Flanges: Details of all flanges fitted are shown on flange data sheet. Alternative British or American Flanges fitted to order.

Finish: Grade I Instrument Finish.

Crystals: These are not supplied with the detector unless otherwise requested.

Sanders

W. H. SANDERS (ELECTRONICS) LIMITED

Gunnels Wood Road, Stevenage, Herts. Tel. Stevenage 981 (6 lines). London Office: 49 Conduit Street, London W.1. Tel. Regent 3534

Printed in England

Sanders

phase shifters

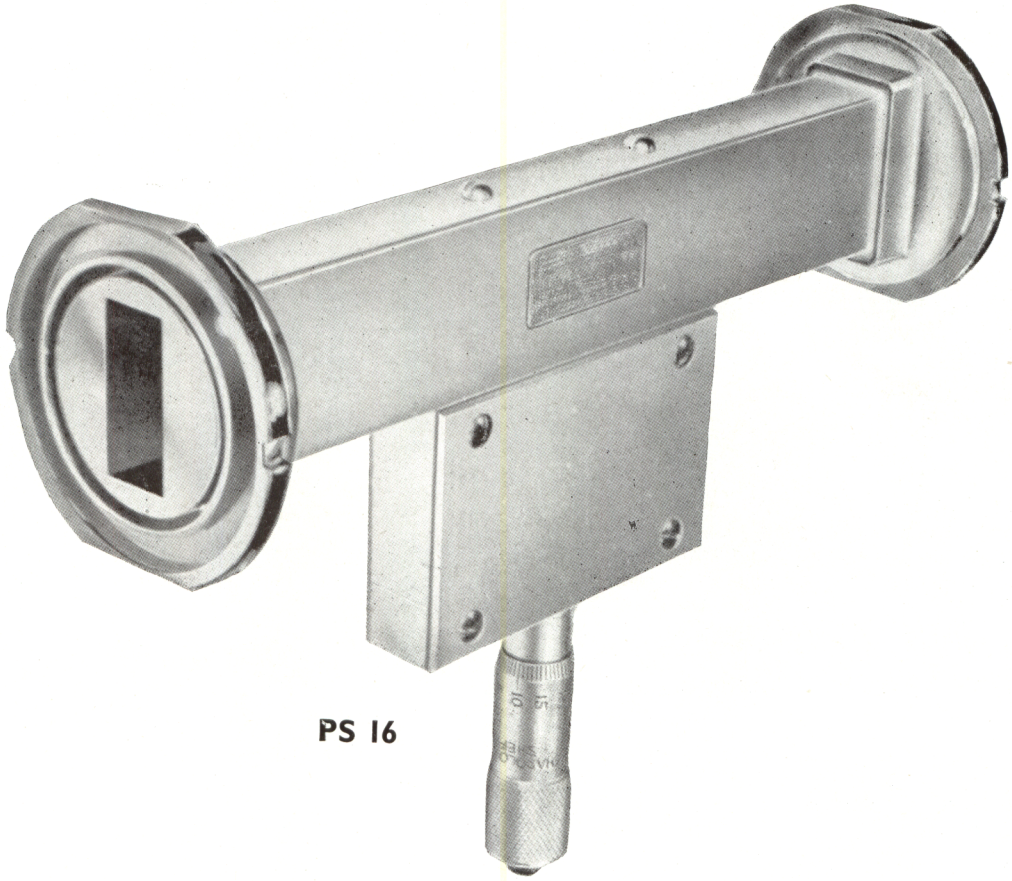

PS 16

Simplicity and low cost have been the main aims in designing these instruments, consistent with good accuracy and a reasonable match.

A stepped distrene element, supported by two push rods, is connected through a kinematic linkage to a micrometer. The relationship between micrometer movement and phase shift is necessarily a function of frequency. In cases where interpolation between the calibration figures provided is insufficiently accurate for measurements at an intermediate frequency, it is not difficult to re-calibrate the phase shifter using a good slotted line and calibrated variable short circuit.

The calibration figures provided at spot frequencies are in intervals of 36° (one tenth of a guide wavelength) up to 180°.

specifications

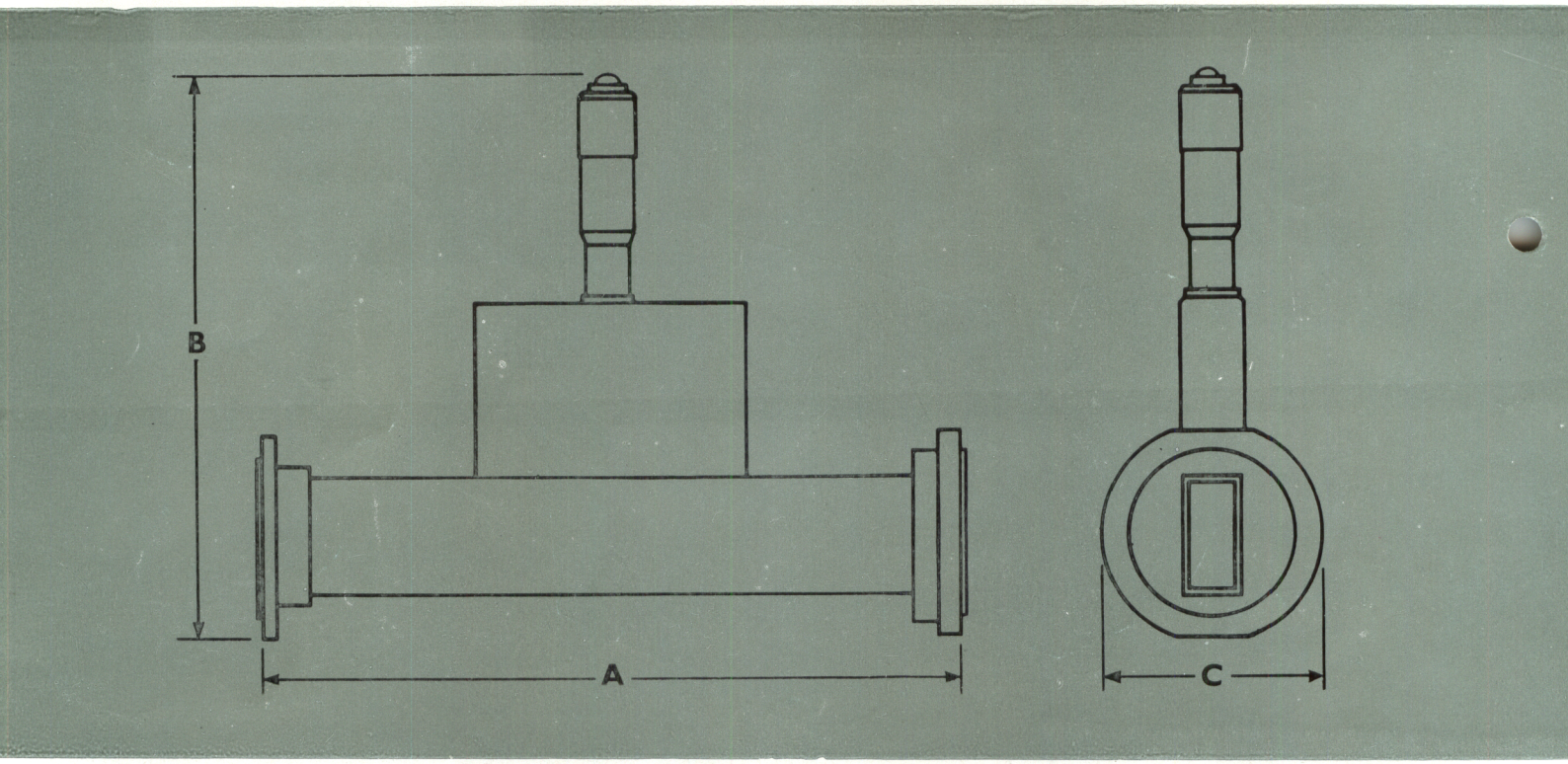

Wave Guide Size	Type No.	Frequency Coverage in kMc/s	Maximum Phase Shift	Calibration	Accuracy	Worst V.S.W.R.	Dimensions A	Dimensions B	Dimensions C	Weight	Flanges
18	PS 18	12.4-18.0	180°	36°	±0.2°	0.8: 1	5½″ 140 mm.	4″ 101.6mm.	1 5/16″ 33.3 mm.	10oz. 283.5 gm.	Z830030 and Z830029
16	PS 16	8.2-10.0	180°	36°	±0.1°	0.8: 1	6″ 152.7 mm.	5″ 127 mm.	1⅞″ 48 mm.	15oz. 425 gm.	Z830004 and Z830003
15	PS 15	7.5-9.5	180°	36°	±0.1°	0.8: 1	9″ 228.6 mm.	5″ 127 mm.	1⅞″ 48 mm.	1¾lb. 794 gm.	Z830034 and Z830033
14	PS 14	5.85-8.0	180°	36°	±0.1°	0.8: 1	10″ 254 mm.	5¼″ 146 mm.	3⅛″ 79.2 mm.	2¾lb. 1.25 kgs.	Z830038 and Z830037
12	PS 12	3.95-5.80	180°	36°	±0.1°	0.8: 1	14½″ 367.5 mm.	7½″ 190.5 mm.	3⅝″ 92 mm.	5lb. 2.27 kgs.	Z830042 and Z830041
10	PS 10	2.50-3.40	180°	36°	±0.1°	0.8: 1	17″ 431.8 mm.	9″ 229 mm.	5 5/16″ 134.9 mm.	7½lb. 3.4 kgs.	Z830010 and Z830009

Finish : Grade I B.S.I. Instrument Finish.
Flanges : Details of flanges fitted are shown on flange data sheet.

W. H. SANDERS (ELECTRONICS) LIMITED

Gunnels Wood Road, Stevenage, Herts. Tel.: Stevenage 981. Grams and Cables: Sandelect, Stevenage. Telex: 82159 Sanders Stev.
London Office: 49 Conduit Street, London, W.1. Telephone : Regent 3534. Telegrams and Cables : Santronic, London
German Associate Company : Sanders Electronics G.M.B.H., Eyssenecksstrasse 19, Frankfurt-am-Main. Telephone: Frankfurt 593368
Telegrams : Santron. Telex : Frankfurt 4--12970

PRINTED IN ENGLAND

Sanders

grade II calibrated attenuators

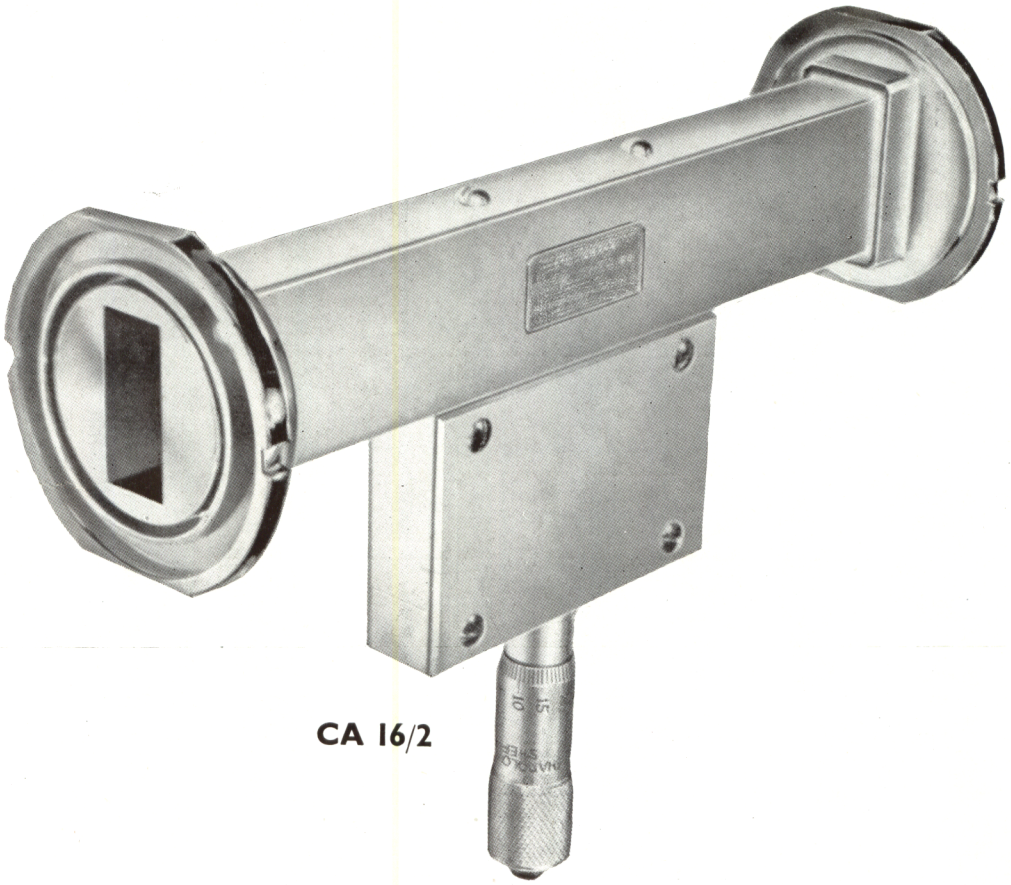

CA 16/2

A micrometer is coupled via an antibacklash system and two rods extending through the narrow wall of a waveguide to a metallised glass vane in the guide. This provides a mechanical discrimination of the position of the glass vane to better than 0.1 db over the range 0 to 40 db.

The attenuator is normally supplied with a 40 db element fitted and calibration figures are provided at four frequencies in 2 db steps from 0 to 20 db and 4 db steps from 20 to 40 db. The accuracy of this calibration is 0.1 db from 0 to 20 and 0.25 db from 20 to 40 db.

specifications

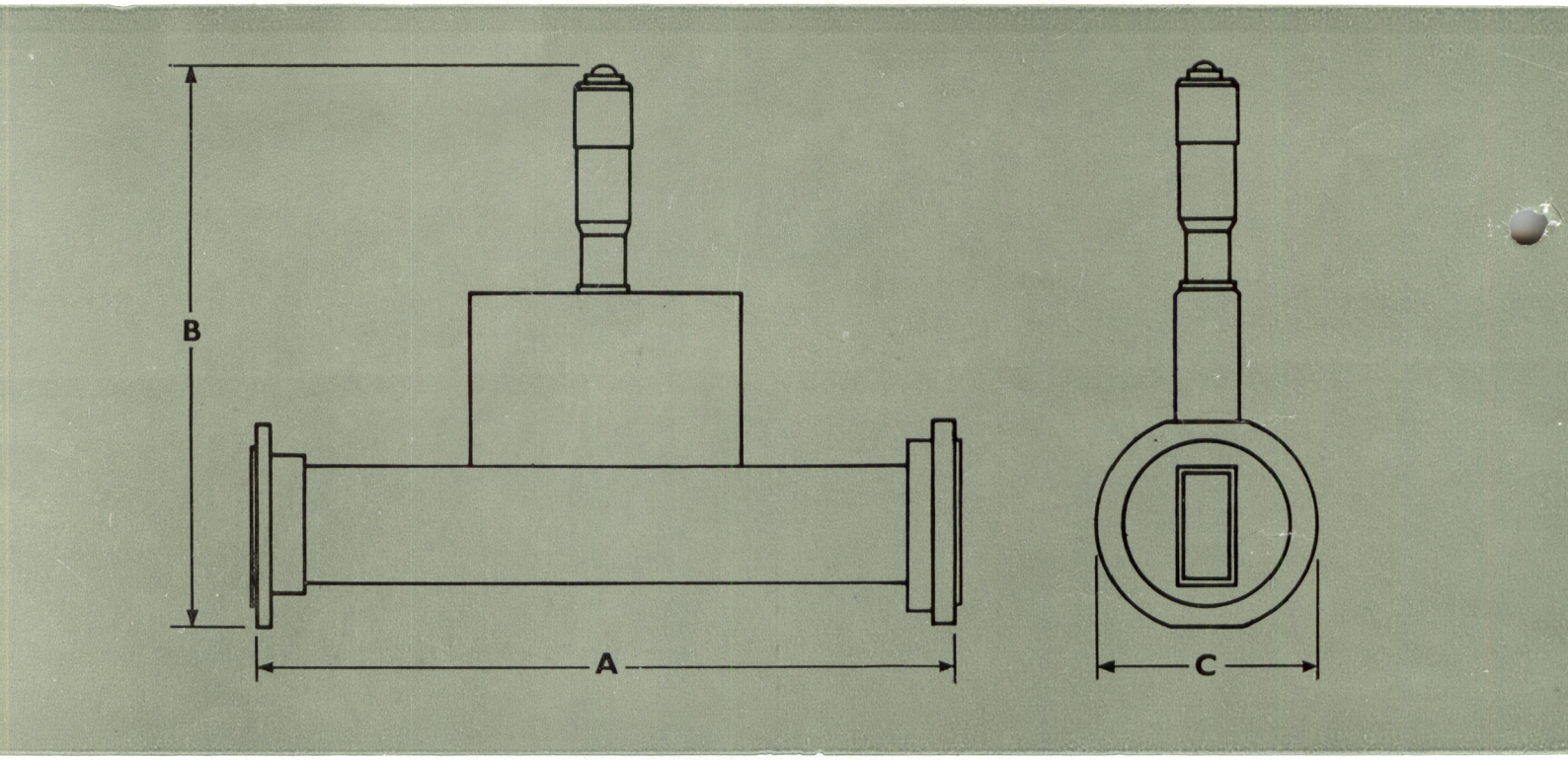

Wave Guide Size	Type No.	Frequency Coverage in kMc/s	Attenuation range in db	Calibration Frequencies in kMc/s	Reset Accuracy in db	V.S.W.R. mid band	Insertion loss in db	Dimensions A	Dimensions B	Dimensions C	Weight	Flanges
18	CA18/2	12.0-17.5	0-40	12.5, 14, 15.5, 17.0	0.1	better than 0.95: 1	0.1 db	5½″ 140 mm.	4″ 101.6 mm:	1 5/16″ 33.3 mm.	10oz. 283.5 grm.	Z830030 and Z830029
16	CA16/2	8.0-10.5	0-40	8.5, 9.0 9.5, 10.0	0.1	,,	0.1 db	6″ 152.4 mm.	5″ 127 mm.	1⅞″ 48 mm.	15oz. 425 grm.	Z830004 and Z830003
15	CA15/2	7.0-10.0	0-40	7.5 8.2 8.8 9.5	0.1	,,	0.1 db	9″ 228.6 mm.	5″ 127 mm.	1⅞″ 48 mm.	1¾lb. 794 grm.	Z830034 and Z830033
14	CA14/2	5.50-8.00	0-40	5.85 6.50 7.00, 7.50	0.1	,,	0.1 db	10″ 254 mm.	5¾″ 146 mm.	3⅛″ 79.4 mm.	2¾lb. 1.25 kgs.	Z830038 and Z830037
12	CA12/2	3.95-5.80	0-40	4.00, 4.50 5.00, 5.50	0.1	,,	0.1 db	14½″ 268.3 mm.	7½″ 190.5 mm.	3⅝″ 92 mm.	5lb. 2.27 kgs.	Z830042 and Z830041
10	CA10/2	2.60-3.60	0-40	2.7, 3.00 3.3, 3.60	0.1	,,	0.1 db	17″ 431.8 mm.	9″ 229 mm.	3¼″ 82.5 mm.	7½lb. 3.4 kgs.	Z830010 and Z830009

Flanges : Details of flanges fitted are shown on flange data sheet.
Finish : Grade I B.S.I. Instrument Finish.

W. H. SANDERS (ELECTRONICS) LIMITED

Gunnels Wood Road, Stevenage, Herts. Tel. : Stevenage 981. Grams and Cables : Sandelect, Stevenage. Telex : 82159 Sanders Stev.
London Office : 49 Conduit Street, London, W.1. Telephone : Regent 3534. Telegrams and Cables : Santronic, London
German Associate Company : Sanders Electronics G.M.B.H., Eysseneckstrasse 19, Frankfurt-am-Main. Telephone : Frankfurt 593368
Telegrams : Santron. Telex : Frankfurt 4—12970

PRINTED IN ENGLAND

Sanders

standing wave meters

Grade I

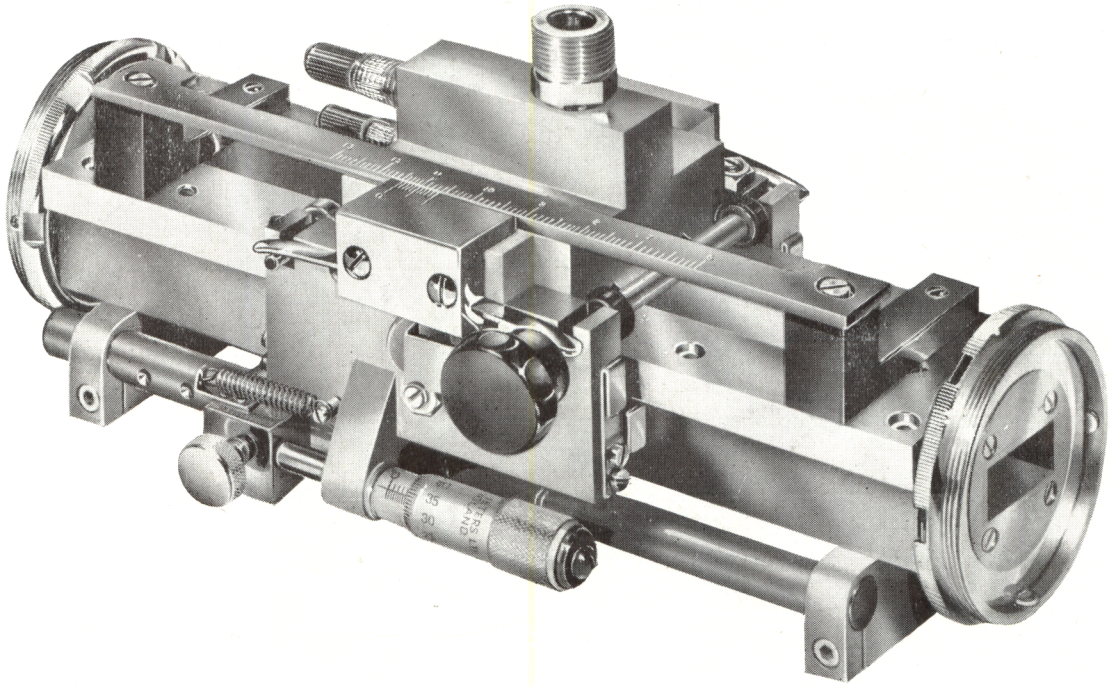

These instruments are designed to achieve an absolute accuracy of measurement of better than 0.5% impedance over the frequency range of the waveguide.

The waveguide is formed from a channel section, and a flat top plate extends beyond the outside surface of the channel section providing a reference surface for location of the carriage and probe assembly. Great care is taken to avoid the danger of distortion as the structure ages, a series of stress relieving processes being applied during manufacture.

The carriage is located according to kinematic principles by means of five rollers. Its position along the axis of the guide is accurately established by means of a scale bar, sliding stop and micrometer. The sliding stop is so arranged that it may be located on the scale bar at precisely defined intervals of 1 c.m., the micrometer attached to the carriage

serving to interpolate between these points to an accuracy of 0.001 cms. When phase measurements are not required to this accuracy, this mechanism may be disconnected and the carriage may be rapidly moved by means of a simple friction drive. The position of the carriage is then indicated by means of a vernier and scale to an accuracy of 0.005 cms.

The instrument is designed to provide R.F. output on a type N coaxial connector. Alternatively, by using a coaxial crystal detector, Type CDN/C or CDN/S (which is supplied separately), rectified output may be obtained. The probe length is fixed and the coupling to the waveguide is about 23 db. The coupling varies only slightly as a function of frequency, due to the fact that two reactive tuning stubs are provided in order to match the output to the probe. It is, therefore, impossible to create serious errors in measurement by maladjustment of the probe circuit, and under no conditions of adjustment will the reflection from the probe exceed 0.01. Faulty setting of the tuning stubs merely results in a loss of coupling to the waveguide and a reduction of reflections from the probe.

TYPICAL PERFORMANCE GRAPH OF A WAVEGUIDE 16 STANDING WAVE METER SWM 16/1

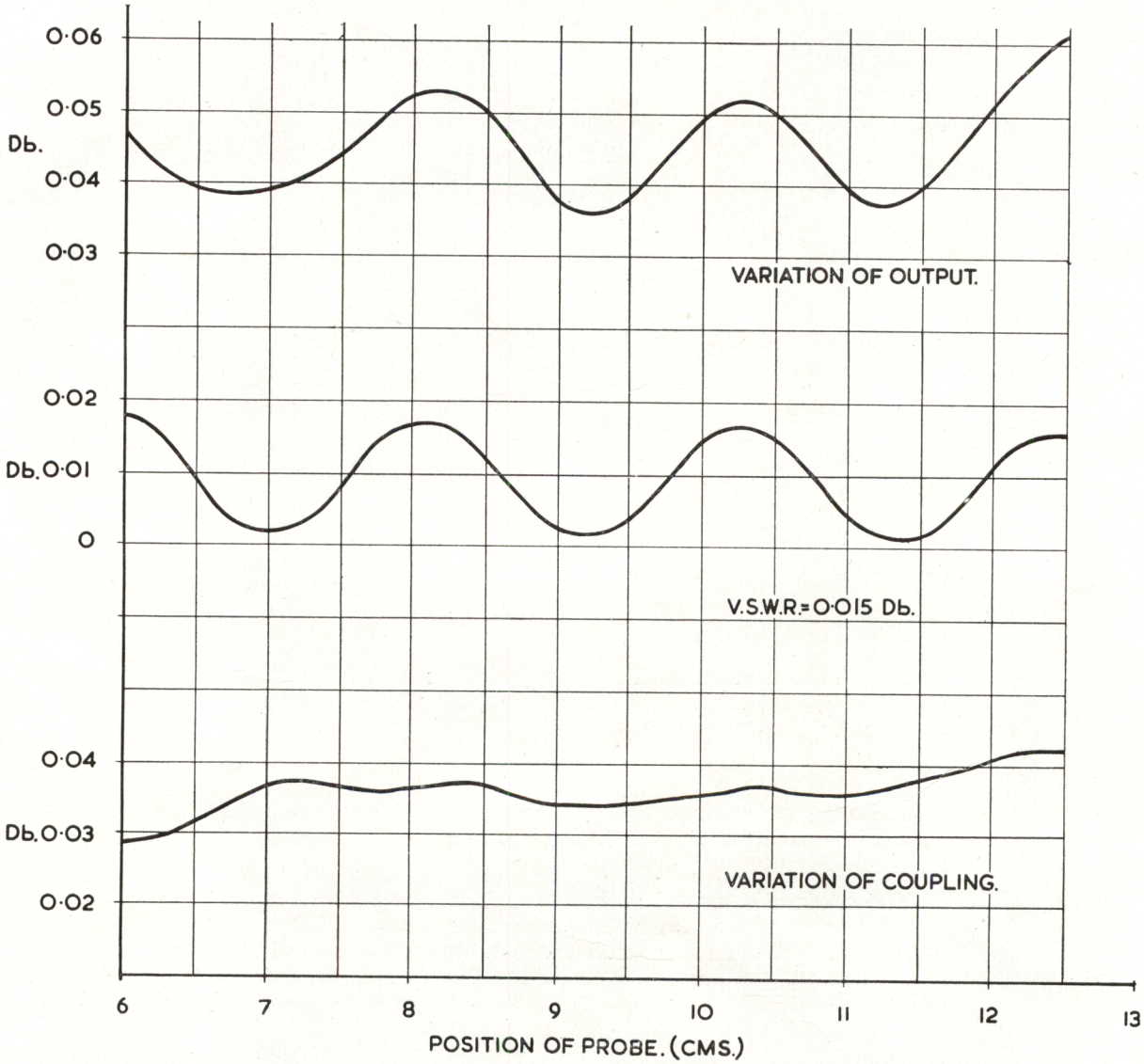

Sanders

E & H junctions

HJ 16

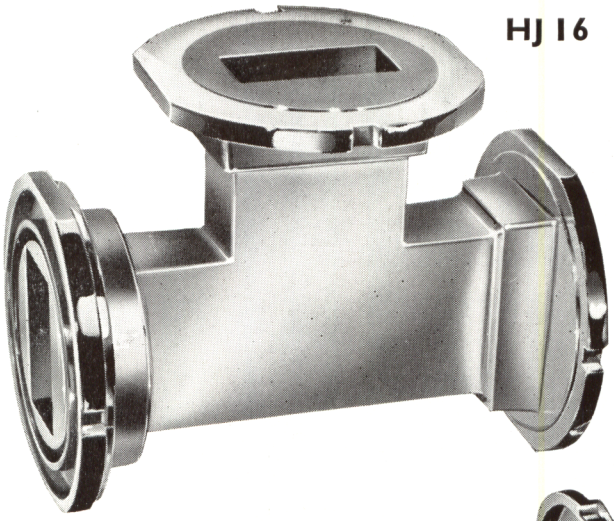

EJ 16

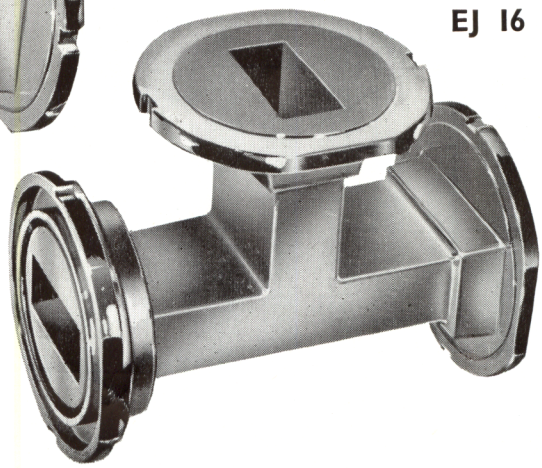

These waveguide junctions may be used for making connections in microwave circuits corresponding to Series and Shunt Connections at low frequencies.

The branch series or shunt waveguide arm, is held perpendicular to the main waveguide to close tolerances to permit use as a power divider.

specifications

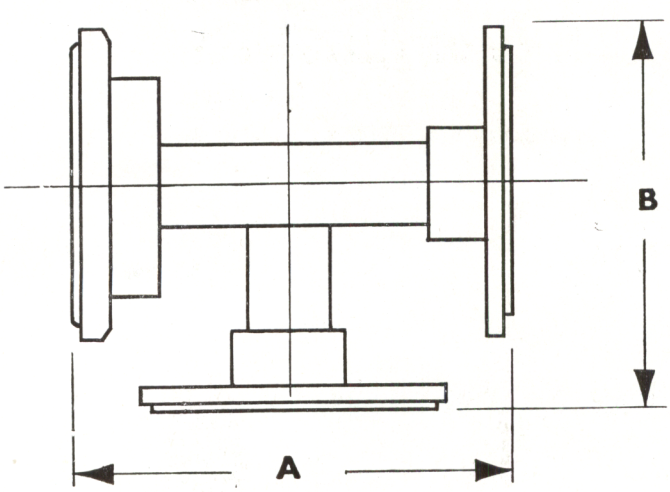

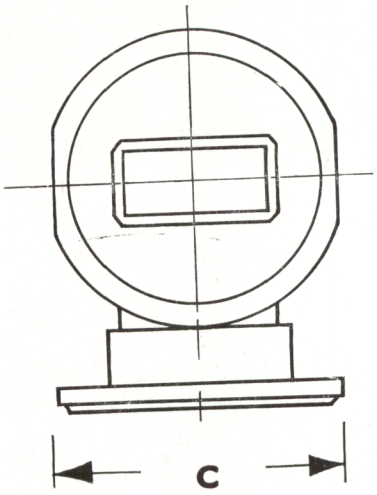

E plane junction

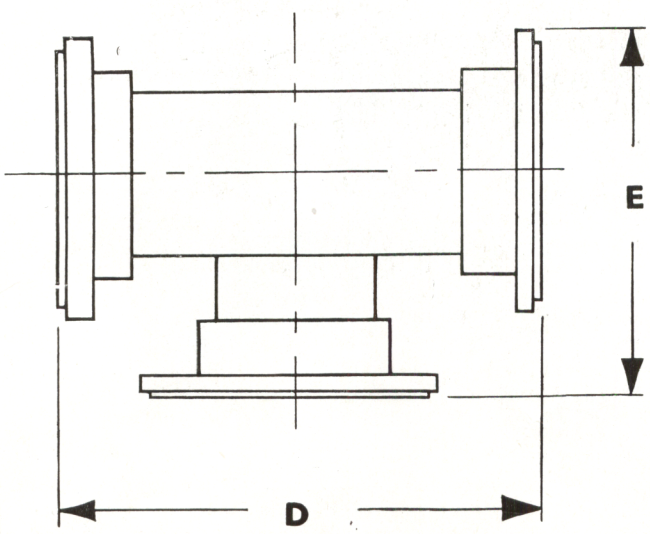

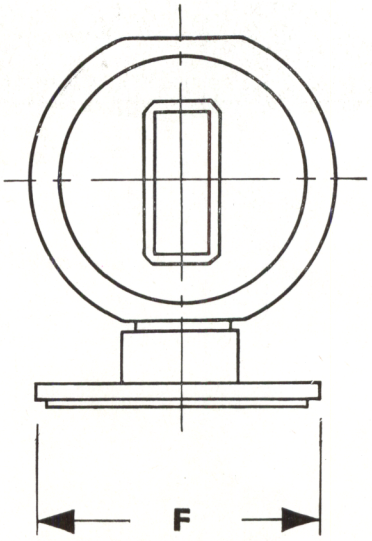

H plane junction

Guide Wave Size	Junctions	Type No.	DIMENSIONS A	B	C	D	E	F	Weight	Flanges
WG 18	E Plane	EJ18	$2\frac{9}{16}$" 65mm.	$1\frac{3}{4}$" 44.4mm.	$1\frac{5}{16}$" 33.3mm.				5oz. 142.0grm.	Z830030 and Z830029 through arms.
	H Plane	HJ18				$2\frac{9}{16}$" 65mm.	2" 50.8mm.	$1\frac{5}{16}$" 33.3mm.	5oz. 142.0grm.	Z830030 perpendicular arm.
WG 16	E Plane	EJ16	$2\frac{1}{2}$" 63.5mm.	$2\frac{1}{4}$" 57.1mm.	$1\frac{7}{8}$" 47.6mm.				$9\frac{1}{2}$oz. 269grm.	Z830004 and Z830003 through arms.
	H Plane	HJ16				3" 76.2mm.	$2\frac{1}{2}$" 63.5mm.	2" 50.8mm.	$9\frac{1}{2}$oz. 269grm.	Z830004 perpendicular arm.
WG 15	E Plane	EJ15	$3\frac{3}{4}$" 95.25mm.	3" 76.2mm.	$1\frac{7}{8}$" 47.6mm.				14oz. 396.9mm.	Z830034 and Z830033 through arms.
	H Plane	HJ15				$3\frac{3}{4}$" 95.25mm.	3" 76.2mm.	$1\frac{7}{8}$" 47.6mm.	14oz. 396.9mm.	Z830034 perpendicular arm.
WG 14	E Plane	EJ14	$4\frac{1}{2}$" 114.3mm.	$4\frac{1}{8}$" 104.7mm.	$3\frac{1}{8}$" 79.5mm.				2lb. 4oz. 1.02Kg.	Z830037 and Z830038 through arms.
	H Plane	HJ14				$4\frac{1}{2}$" 114.3mm.	$4\frac{1}{8}$" 104.7mm.	$3\frac{1}{8}$" 79.5mm.	2lb. 4oz. 1.02Kg.	Z830037 perpendicular arm.
WG 12	E Plane	EJ12	6" 152.4mm.	$4\frac{13}{16}$" 122.2mm.	$3\frac{5}{8}$" 92.0mm.				4lb. 1.8Kg.	Z830042 and Z830041 through arms.
	H Plane	HJ12				6" 152.4mm.	$5\frac{5}{16}$" 135mm.	$3\frac{5}{8}$" 92.0mm.	4lb. 1.8Kg.	Z830042 on perpendicular arm.
WG 10	E Plane	EJ10	9" 228.6mm.	$7\frac{3}{4}$" 196.85mm.	$3\frac{1}{4}$" 82.5mm.				7lb. approx. 3.18Kg.	Z830009 and Z830010 through arms.
	H Plane	HJ10				9" 228.6mm.	$8\frac{1}{2}$" 215.9mm.	$3\frac{1}{4}$" 82.5mm.	7lb. approx. 3.18Kg.	Z830010 on perpendicular arms.

Finish: Grade I Instrument Finish.

Flanges: Alternative flanges fitted to order. Details shown on flange data sheet.

Sanders

test bench isolators, type TBI



This ferrite isolator has been designed especially for test equipment applications and has a very high performance over an extremely broad frequency range. Covering all of the commonly used frequencies in X-band with no adjustments whatever, this single unit takes the place of the usual buffer attenuator between RF oscillator and waveguide bench.

The isolator combines a good match over the whole of its operating range with very low forward loss and high attenuation of energy reflected from subsequent mismatches. Thus frequency pulling of the RF source is avoided whilst full advantage is taken of the power available.

The design of the isolator is based on the principle of resonance absorption of RF energy by magnetized soft ferrite. A long thin section of ferrite is mounted approximately in the region of the waveguide where the RF magnetic field is circularly polarized. The field of a permanent magnet is applied parallel to the RF electric field vector to line up the spin axes of un-paired electrons in the ferrite material. Where the magnetic field strength is appropriate to the RF frequency, these electrons will precess in sympathy with the RF

specifications

magnetic field vector if this is rotating in the sense of the precession. Under these conditions, energy is extracted from the passing wave. In the case of a wave travelling in the opposite direction, the sense of circular polarization in the region of the ferrite is opposite to that of the electron precession and absorption does not take place.

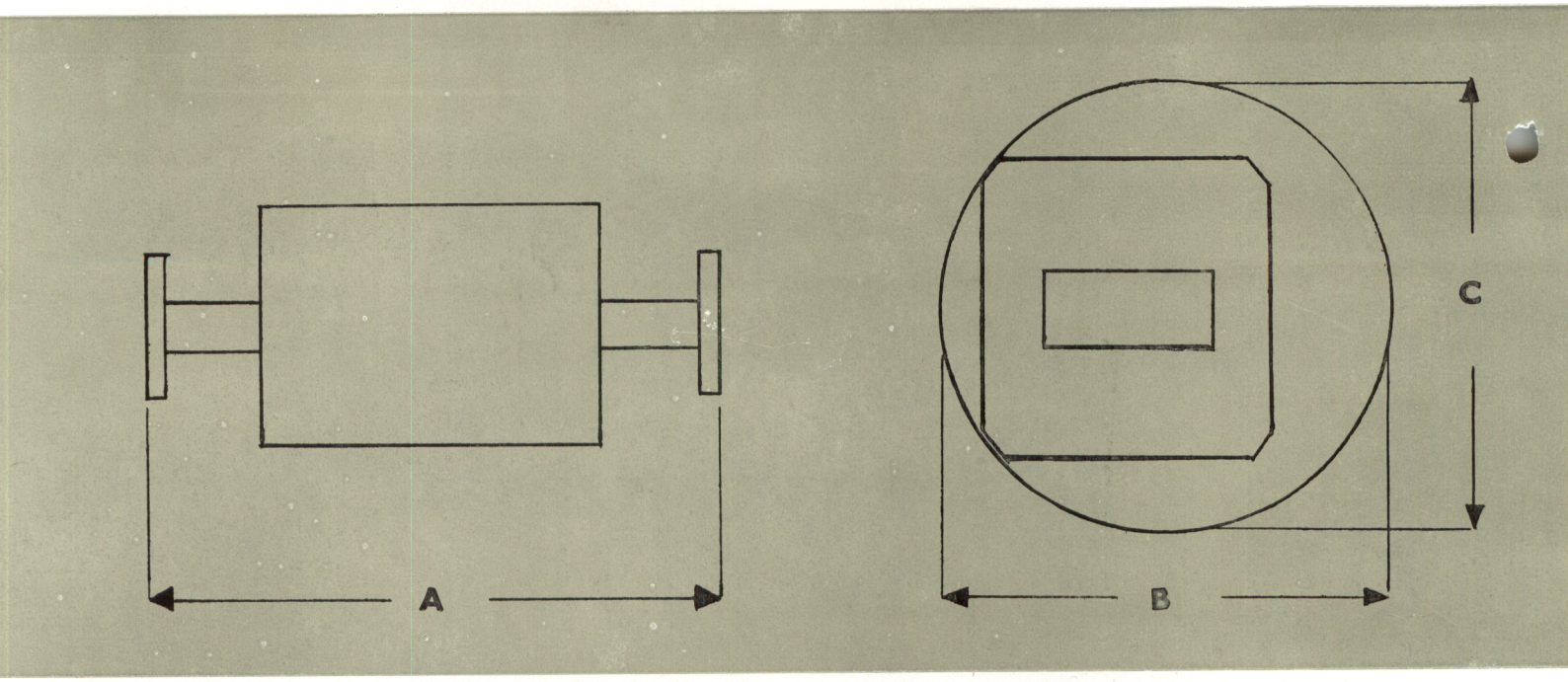

Wave Guide Size	Type No.	Frequency Range (Kmc/s)	Average power (watts)	Isolation (minimum)	Insertion Loss (maximum)	Input V.S.W.R. (minimum)	Dimensions A	Dimensions B	Dimensions C	Weight	Flanges
16	TBI 16/30	8.2-12.4	15	30 db	1.25 db	0.87: 1	6″ 152.4 mm.	2½″ 63.5 mm.	2½″ 63.5 mm.	2lb. 10 oz. 1.17 kg	Z830052 c Z830004

NOTES:

1. Power rating assumes load mismatch not worse than 2:1.
2. V.S.W.R. measurements taken under matched load conditions.

Flanges : Alternative flanges fitted to order — see flange data sheet.
Finish : Steel Blue metallic paint.

W. H. SANDERS (ELECTRONICS) LIMITED

Gunnels Wood Road, Stevenage, Herts. Tel. : Stevenage 981. Grams and Cables : Sandelect, Stevenage. Telex : 82159 Sanders Stev.
London Office : 49 Conduit Street, London, W.1. Telephone : Regent 3534. Telegrams and Cables : Santronic, London
German Associate Company : Sanders Electronics G.M.B.H., Eysseneckstrasse 19, Frankfurt-am-Main. Telephone : Frankfurt 593368
Telegrams : Santron. Telex : Frankfurt 4—12970

PRINTED IN ENGLAND