REVISIONS		
ISS	ZONE	DESCRIPTION\PER REQUEST\DATE

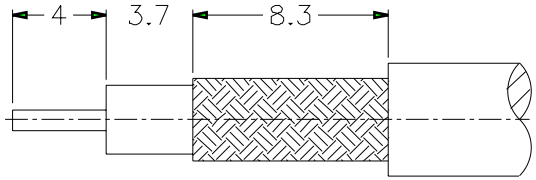

RECOMMENDED
CABLE STRIPPING DIM'S

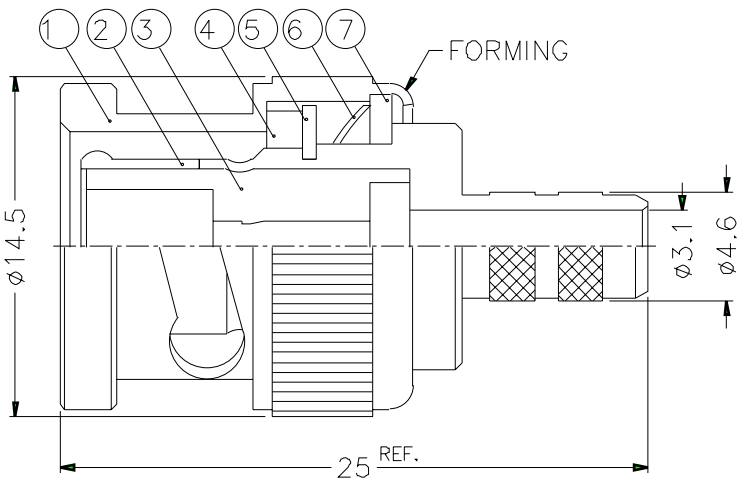

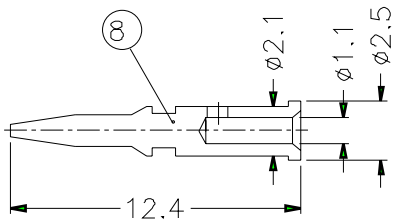

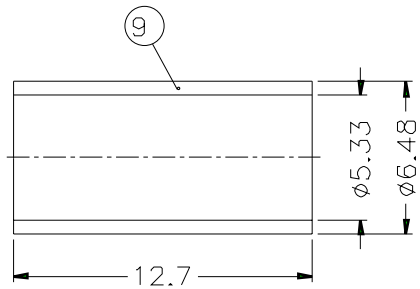

NOTES: FINISH (PLATING THICKNESS IN MICRO-INCHES)
1. BRASS PER QQ-B-626
2. BRASS PER QQ-B-613
3. NICKEL PL. 100 MIN. THICK OVER COPPER STRIKE
4. NICKEL PL. 200 MIN. THICK OVER COPPER STRIKE
5. GOLD PL. 3 MIN. THICK OVER NICKEL PL. 100 MIN. THICK OVER COPPER STRIKE

NO.	DESCRIPTION	MATERIAL	FINISH	Q'TY	DRAWING NO.
9	FERRULE	COPPER	NOTE 3	1	FR-648/533X 127C
8	CONTACT PIN	NOTE 1	NOTE 5	1	B50000-8-25/11
7	WASHER	NOTE 2	NOTE 3	1	WS-128/9X08
6	SPRING	SK5	NOTE 4	1	B50000-6
5	RETAINER RING	NOTE 1	NOTE 3	1	B50000-5
4	GASKET	RUBBER	RED	1	GS-115/8X15
3	INSULATOR	DELRIN	NATURAL	1	B50000-3-50-A
2	BODY	NOTE 1	NOTE 3	1	B50000-2-46/31
1	SHELL	NOTE 1	NOTE 3	1	B50000-1-B

DIMENSIONS ARE IN MILLIMETERS

UNLESS OTHERWISE SPECIFIED TOLERANCES
0.5-6 = ±0.2
6-30 = ±0.4
30-120 = ±0.6
120-315 = ±1
315-1000 = ±1.6
1000-2000 = ±2.4

SCALE 3/1 ISSUE A

PART NO.

APPROVED DATE 04-30-99'

CHECKED DATE 04-30-99'

DRAWN DATE 04-30-99'

TITLE
BNC CRIMP PLUG

DRAWING NO.
KJ-B1121A1-ND3G-58CU-50

FILE NO. F:\DWG\B\1121A1\58CU-50\ND3G