RevNo	Revision note	Date	Signature	Checked

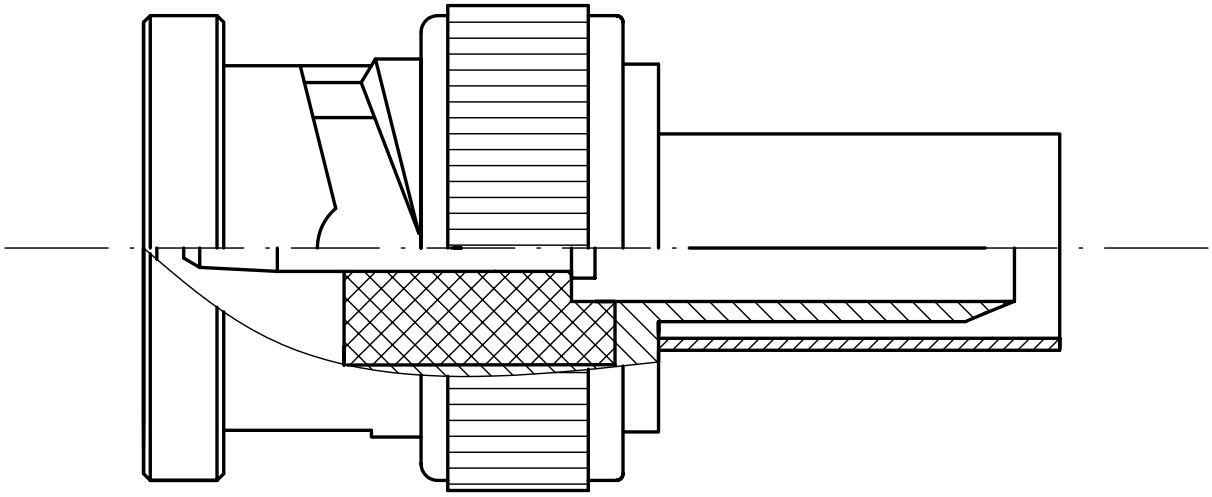

Material and Plating
Body : Brass SUCOPLATE plated;
Center contacts: Brass gold plated;
Insulators: PTFE;
Crimp ferrule: Copper alloy nickel plated.
Electrical characteristics:
Characteristic impedance 75Ω;
Working Voltage: 500 V;
Frequency range : 0-4GHz
Dielectric withstanding Voltagr : 1500 V
Contact resistance : Center contact ⩽1.5mΩ;
Outer contact ⩽1mΩ;
Insulation resistance ⩾5000MΩ;
VSWR⩽1.3:
Mechanical characteristics:
Durability 500 cycles

Itemref	Quantity	Title/Name, designation, material, dimension etc		Article No./Reference	
Designed by li yan	Checked by	Approved by - date	Filename	Date 2004.12.20	Scale 4:1
xian connector tech		BNC-75J59Y BNCQ1112012/W/0016			
				Edition 2	Sheet