ENG. NO SDA-73174-0113 | EDP NO. | SIMILAR ITEM | PROJECT NO. 73174-0113 | DO NOT SCALE DRAWING

INTERFACE PER MOLEX STANDARD ES-73599-0000

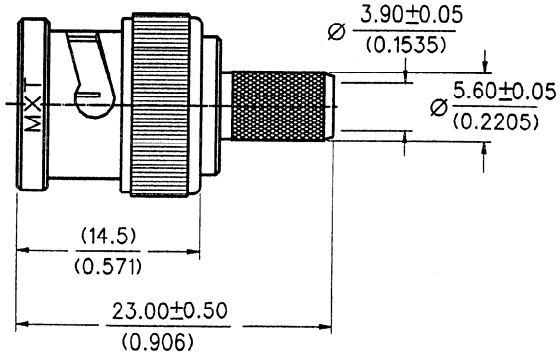

BNC ASSEMBLY

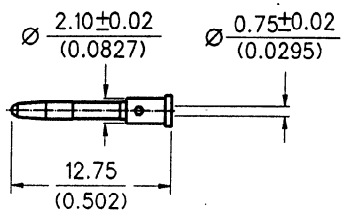

CENTER CONTACT

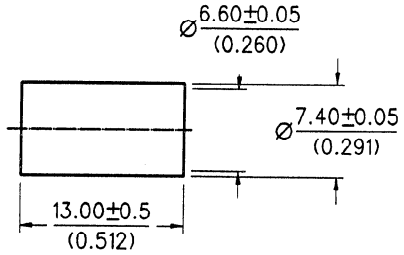

FERRULE

CABLE ATTACHMENT:

INNER CONTACT ATTACHMENT ---SOLDER/CRIMP (HEX.: 1.69)
OUTER CONDUCTOR ----------CRIMP (HEX.: 6.48)
ASSEMBLY INSTRUCTION ---------AS-73597-0032

CONSTRUCTION:

COUPLING NUT----------ZINC ALLOY
CONNECTOR BODY----------BRASS
DIELECTRIC----------TEFLON
CENTER CONTACT----------BRASS
FERRULE----------BRASS
RETAINING RING ----------BRASS
SPRING WASHER----------BERYLLIUM COPPER
WASHER----------BRASS
GASKET----------SILICONE RUBBER

FINISH :

COUPLING NUT----------NICKEL PLATING
CONNECTOR BODY----------NICKEL PLATING
CENTER CONTACT----------GOLD PLATING
FERRULE----------NICKEL PLATING

MECHANICAL & ELECTRICAL CHARACTERISTICS:

PER PRODUCT SPECIFICATION PS-73598-0015

MATERIAL & FINISHES:

PER PRODUCT SPECIFICATION PS-73598-0015

PACKAGING:

INDIVIDUAL PLASTIC BAGS.

LTR	REVISION RECORD	ECN	DR/CHK	DATE
C	ADD CONSTRUCTION, FINISH, PEC. CONVERT TO STANDARD FORMAT	0531	Iris	95/02/23

STANDARD ITEM ☐YES ☒NO

MATERIAL : SEE NOTE
FINISH : SEE NOTE
SCALE : 2.5:1 UNIT : mm(INCH)
DRAWN BY : IRIS WANG 92/08/04
CHK'D BY
APPR'D BY :
SHEET 1 OF 1

MOLEX TAIWAN LTD. (R.F. DIVISION)

GENERAL TOLERANCES
ANGLE : ± 3° DIM. ± 0.25 (±.01)

DRW. NO.: SDA-73174-0113 REV C

TITLE : BNC 75 OHMS STRAIGHT PLUG RG59B/U,RG62A/U CRIMP/CRIMP (CAPTIVE)

THIS DRAWING CONTAINS INFORMATION THAT IS PROPRIETARY TO MOLEX TAIWAN AND SHOULD NOT BE USED WITHOUT WRITTEN PERMISSION MXT , So - 13

d:\dgn\s1740113.dgn Mar. 2, 1995 17:03:21