BACK TO MAIN MENU

ML 72

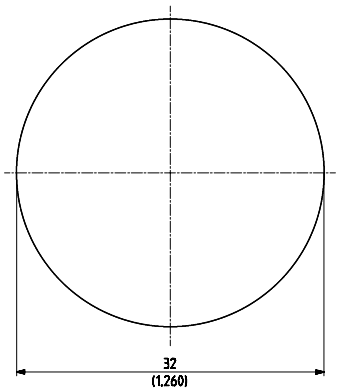

ML 73

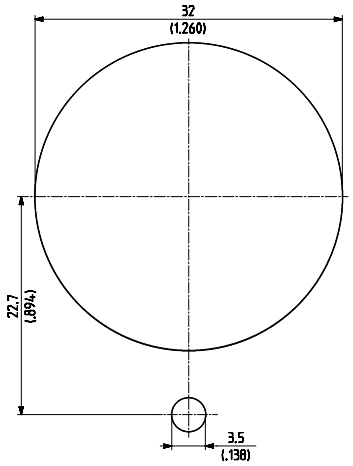

ML 74

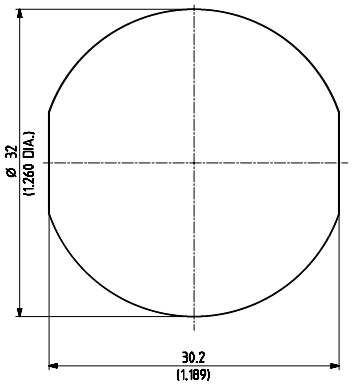

ML 75

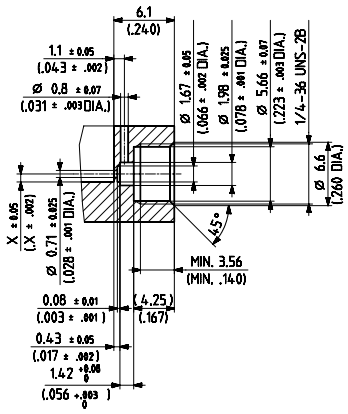

ML 76

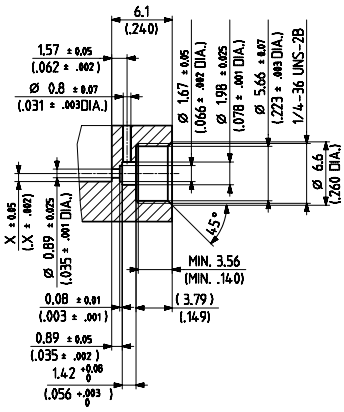

ML 77

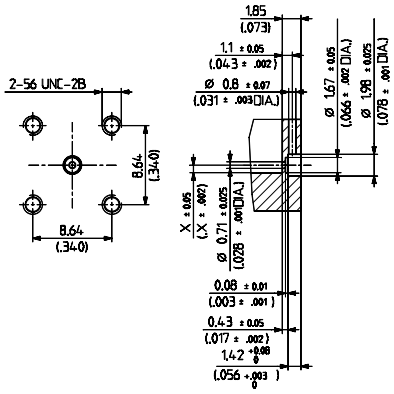

ML 78

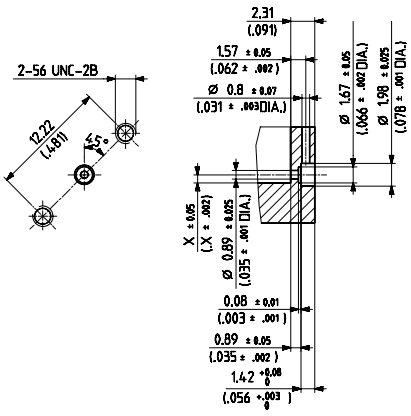

ML 79

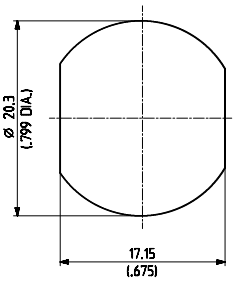

ML 80

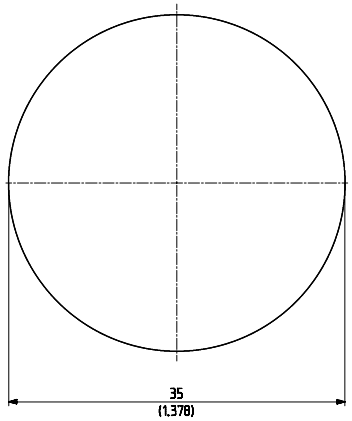

BACK TO MAIN MENU