TQ Connector :-

Drawing of TQ Connector : -

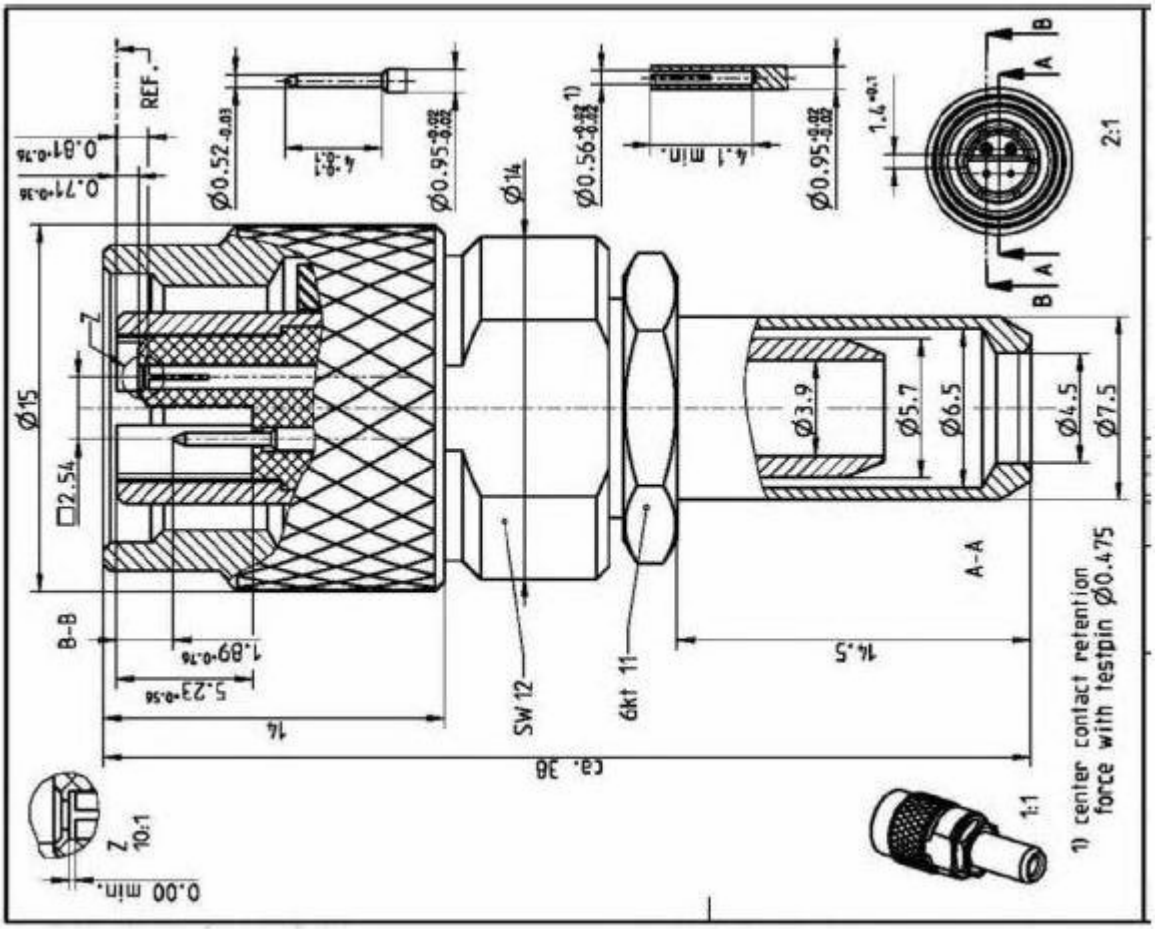

SYNERGY TELECOM (P) LTD.
13-15, RPS Flats, E-Block, Vikas Puri, New Delhi - 110 018 (INDIA)
Phone: +91-11-28533349 Fax: +91-11-28531435 Mobile: +91-9810138894
Email: pradeep@rfconnectorhouse.com, MSN: pradeepagrawalsynergy@hotmail.com
PRINCIPAL SITE: http://www.vinncom.info Skype Account: pradeepag
My trademanager ID: synergytelecom www.rfconnectors.info

pdfMachine
Is a pdf writer that produces quality PDF files with ease!
Produce quality PDF files in seconds and preserve the integrity of your original documents. Compatible across nearly all Windows platforms, if you can print from a windows application you can use pdfMachine.
Get yours now!