REVISIONS		
ISS	ZONE	DESCRIPTION\PER REQUEST\DATE
B	C-1	NO.1 WAS CHANGED\RD-DM000310001\03-10-'11

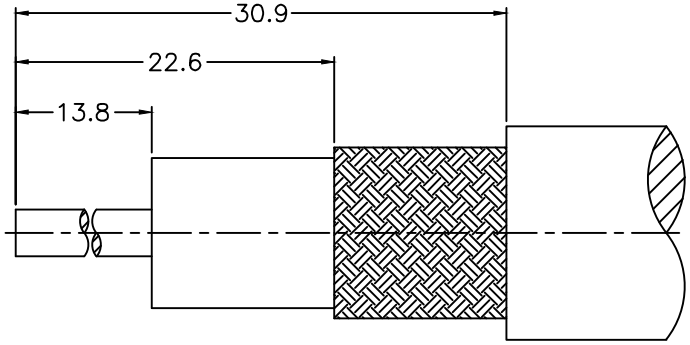

RECOMMENDED
CABLE STRIPPING DIM'S
（建議剝線尺寸）

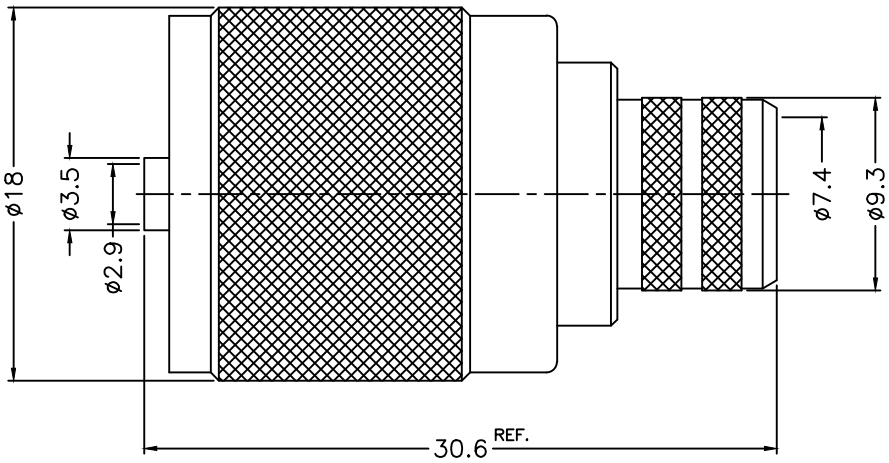

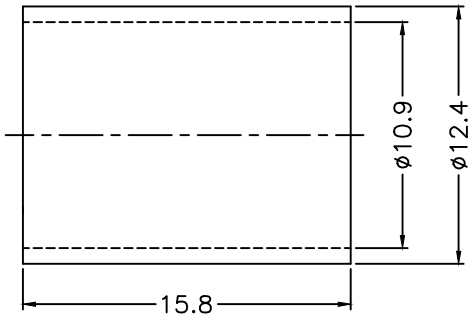

1. CRIMPED FERRULE
   HEX CRIMP SIZE .429"
2. CRIMPED CONTACT PIN
   HEX CRIMP SIZE .118"

NOTES: FINISH (PLATING THICKNESS IN MICRO-INCHES)
1. BRASS
2. SILVER PL. 100 MIN. THICK OVER COPPER PL. 50 MIN. THICK
3. NICKEL PL. 100 MIN. THICK OVER COPPER PL. 50 MIN. THICK
4. TEFLON

NO.	DESCRIPTION	MATERIAL	FINISH	Q'TY	DRAWING NO.
5	FERRULE	NOTE 1	NOTE 3	1	FR-109-124-158
4	CONTACT PIN	NOTE 1	NOTE 2	1	600-1121A1-4-2.9
3	INSULATOR	NOTE 4	NATURAL	1	600-1121A1-3-50T
2	BODY	NOTE 1	NOTE 2	1	600-1121A1-2-17
1	SHELL	NOTE 1	NOTE 2	1	600-1121A1-1

DIMENSIONS ARE IN MILLIMETERS

UNLESS OTHERWISE SPECIFIED TOLERANCES
0.5-6 = ±0.2
6-30 = ±0.4
30-120 = ±0.6
120-315 = ±1
315-1000 = ±1.6
1000-2000 = ±2.4

SCALE	3/1	ISSUE	B

PART NO.

APPROVED	DATE	03-10-'11
CHECKED	DATE	03-10-'11
DRAWN	DATE	03-10-'11

G.L.I.

TITLE
UHF CRIMP PLUG
(FOR BELDEN 8214, 9913, 9914, LMR400)

DRAWING NO.
600-1121A2-17-50

FILE NO. R:\D\G\DWG\600\1121A2\17\50