Tuesday, April 27, 2010 15:20:32

Proposed Integrated Crimp-Spigot
and reducing adaptor for PL-259

Note - use standard RG-58 BNC Crimp-Ferrule
for single screened cables or substitute with
RG-223/142 for double screened cables.

Material: Brass
Finish: Nickel Plate or Silver Plate (as required)

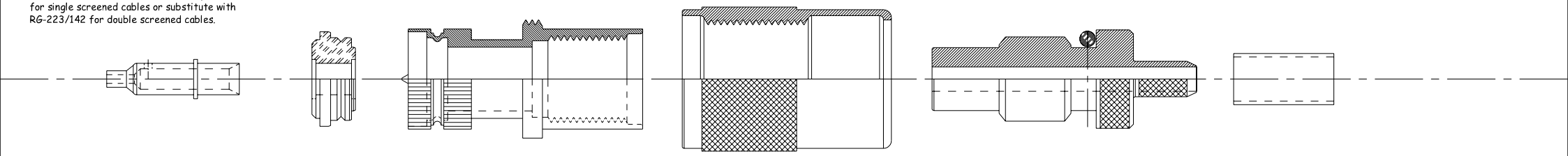

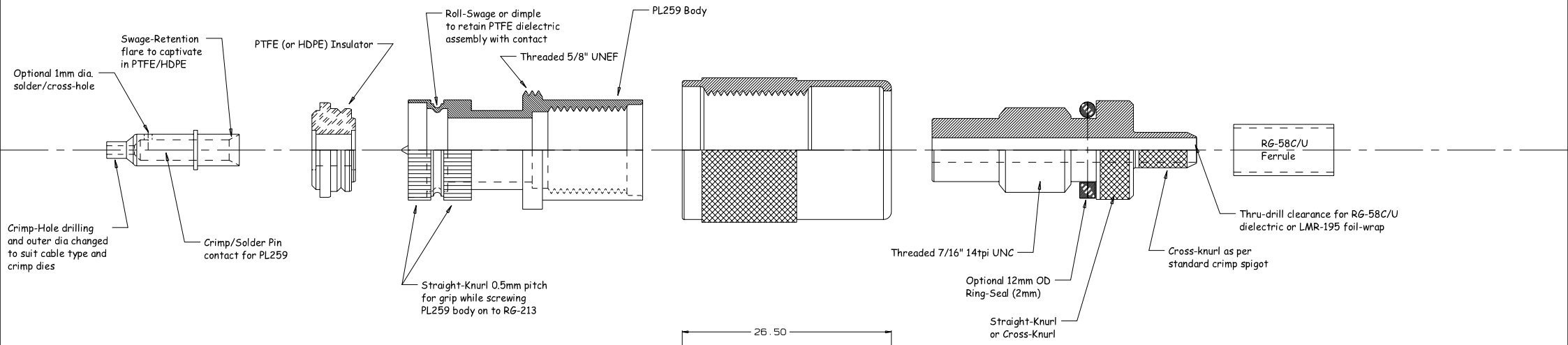

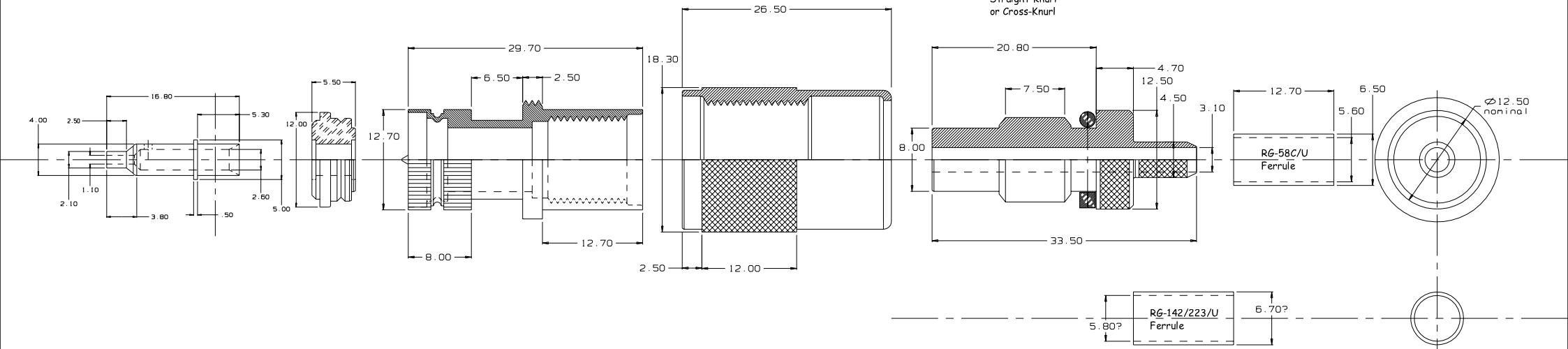

Note - Other proposed Crimp-Spigot (reducing-adaptors) sizes
will include RG-59 + RG-6 and their 50 Ohm LMR equivalents
RG-59 (replaces UG-176/U) or LMR-240
RG-6 or LMR-300

CASA Modular Systems P.O. BOX 38-826, WELLINGTON, NEW ZEALAND TELEPHONE : (04-4) 5687 277 FACSIMILE : (04-4) 5685 181 E-MAIL : sales@casa.co.nz	CUSTOMER : CASA Modular Systems DESCRIPTION : Integrated UHF PL259 Adaptor for RG-58			SIZE A4	DRAWING Reference No. RD-UHF-RG58	ISSUE A
	DRAWN : AWD	DATE : 26/04/10	APPROVED : ?	DWG. SCALE 1:1	JOB No. XXXX	