THIS DRAWING IS UNPUBLISHED. RELEASED FOR PUBLICATION ,19 .
© COPYRIGHT 19 BY AMP INCORPORATED. ALL RIGHTS RESERVED.

LOC	DIST
BD	36

REVISIONS

P	LTR	DESCRIPTION	DATE	DWN	APVD
	M	REDRAWN ON CAD W/O CHANGE PER EC 0020-1343-95	15 FEB 96	BC	GS

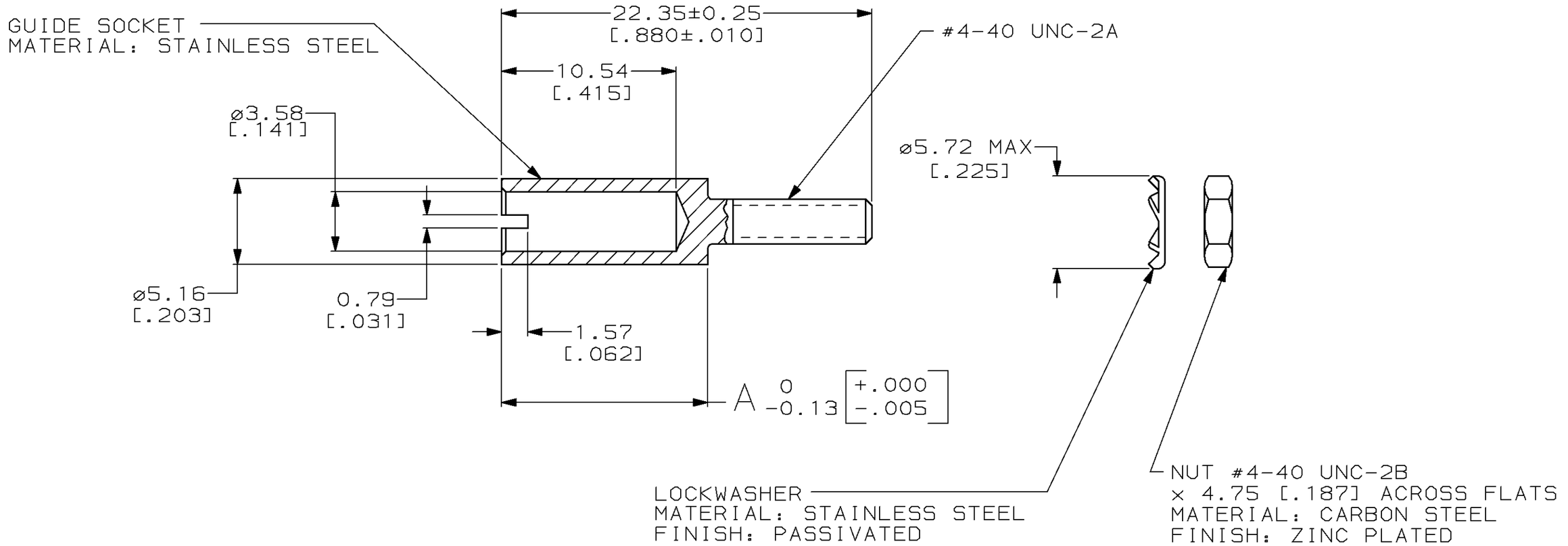

11.94 [.470]	203964-5
12.45 [.490]	203964-1
A	PART NUMBER

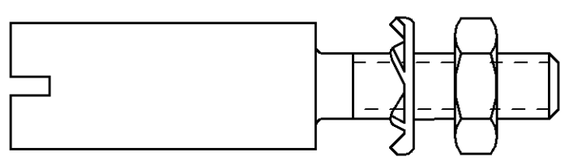

ASSEMBLED VIEW

THIS DRAWING IS A CONTROLLED DOCUMENT FOR AMP INCORPORATED. IT IS SUBJECT TO CHANGE AND THE CONTROLLING ENGINEERING ORGANIZATION SHOULD BE CONTACTED FOR THE LATEST REVISION.

DIMENSIONS: mm [INCHES]

TOLERANCES UNLESS OTHERWISE SPECIFIED:

0 PLC	±-
1 PLC	±-
2 PLC	±0.38 [.015]
3 PLC	±-
4 PLC	±-
ANGLES	±-

MATERIAL: SEE CALLOUTS

FINISH: SEE CALLOUTS

DWN	B.CARBO	15 FEB 96
CHK	R. STONE	20 FEB 96
APVD	G. STEINHAUER	17 APR 96
PRODUCT SPEC	–	
APPLICATION SPEC	–	
WEIGHT	–	

CUSTOMER DRAWING

AMP Incorporated
Harrisburg, PA 17105-3608

NAME: GUIDE SOCKET KIT, CORNER, UNASSEMBLED, MINIATURE RECTANGULAR M SERIES

SIZE	CAGE CODE	DRAWING NO
A3	00779	C-203964

SCALE	SHEET	REV
4:1	1 OF 1	M

AMP 1470-19 REV 09MAY94