THIS DRAWING IS UNPUBLISHED. RELEASED FOR PUBLICATION -,- .
© COPYRIGHT - By - ALL RIGHTS RESERVED.

REVISIONS

P	LTR	DESCRIPTION	DATE	DWN	APVD
	V1	REVISED PER ECO-15-002073	06MAY2015	NK	MZ
	W	REVISED PER ECR-16-017870	20APR2017	BDA	MZ

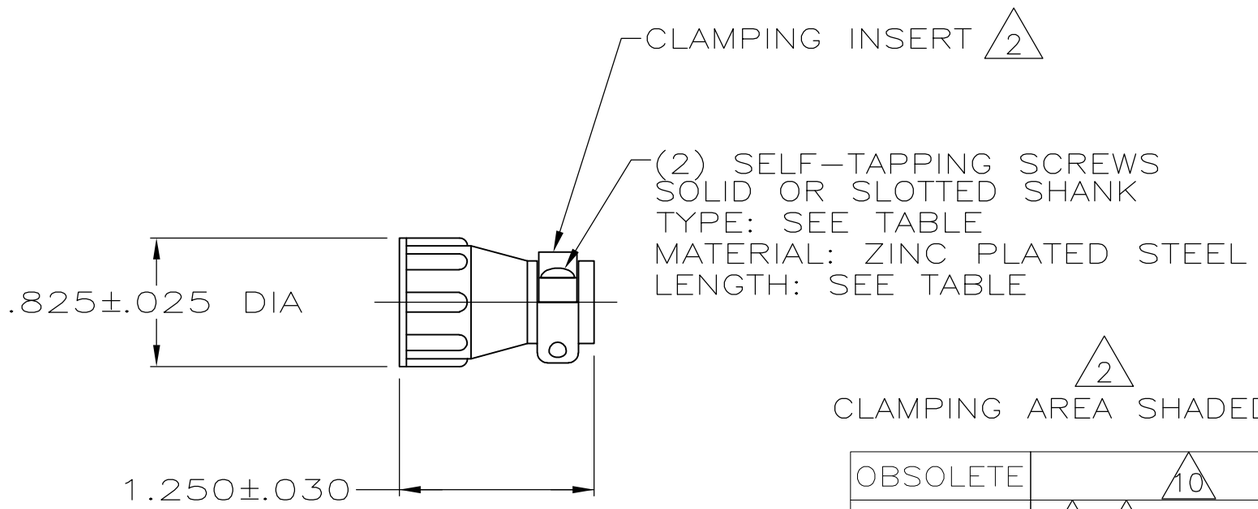

1 PARTS PACKAGED UNASSEMBLED.

2 CABLE CLAMPING AREA ADJUSTABLE FROM .004 TO .055 SQ IN BY REVERSING CLAMPING INSERTS.

3 .329 MAXIMUM CABLE OUTSIDE DIAMETER.

4 BULK PACKAGED KITS TO BE ORDERED IN MULTIPLES OF 800 ONLY.

5 OBSOLETE PART NUMBER.

6 STAINLESS STEEL (NON MAGNATIC).

7 CABLE CLAMP WITH NON-MAGNETIC STAINLESS STEEL SCREWS.

8 ZINC PLATED STEEL, NON-HEXAVALENT CHROMATE.

9 OBSOLETE PARTS: OBSOLETE CIS STREAMLINING PER D.RENAUD/D.SINISI

10 SPECIAL PACKAGING CONSISTING OF 1 KIT PER INDIVIDUAL BAG, 20 INDIVIDUAL BAGS PER LARGER BAG, 5 LARGER BAGS PER SHIPPER BOX.

	PACKAGING	SCREW FINISH	SCREW LENGTH	SCREW TYPE	PART NUMBER
OBSOLETE	10	8	.50 +.00 -.05	#5-20	2-206062-0
OBSOLETE	7 4 BULK	6	.50 +.00 -.05	#5-20	1-206062-9
	4 BULK	8	.50 +.00 -.05	#5-20	1-206062-7
	INDIVIDUAL	8	.38 +.00 -.05	#5-20	1-206062-6
	4 BULK	8	.38 +.00 -.05	#5-20	1-206062-5
	INDIVIDUAL	8	.50 +.00 -.05	#5-20	1-206062-4
	INDIVIDUAL	8	.62 +.00 -.05	#5-20	1-206062-3
7	INDIVIDUAL	6	.50 +.00 -.05	#5-20	1-206062-2
SUPERSEDED BY 1-206062-3	INDIVIDUAL	8	.62 +.00 -.05	#5-20	1-206062-1
9 OBSOLETE	~~SMALL PACK~~	8	~~.38 +.00 -.05~~	~~#5-20~~	~~1-206062-0~~
AMP BRAZIL USE ONLY	~~INDIVIDUAL~~		~~12mm +.0 -.8~~	~~3mm-20~~	5 ~~206062-9~~
AMP BRAZIL USE ONLY	~~INDIVIDUAL~~		~~10mm +.0 -.8~~	~~3mm-20~~	5 ~~206062-8~~
SUPERSEDED BY 1-206062-7	~~4 BULK~~	8	~~.50 +.00 -.05~~	~~#5-20~~	~~206062-4~~
SUPERSEDED BY 1-206062-4	~~INDIVIDUAL~~	8	~~.50 +.00 -.05~~	~~#5-20~~	~~206062-3~~
SUPERSEDED BY 1-206062-5	~~4 BULK~~	8	~~.38 +.00 -.05~~	~~#5-20~~	~~206062-2~~
SUPERSEDED BY 1-206062-6	~~INDIVIDUAL~~	8	~~.38 +.00 -.05~~	~~#5-20~~	~~206062-1~~

THIS DRAWING IS A CONTROLLED DOCUMENT.

DIMENSIONS: INCHES

TOLERANCES UNLESS OTHERWISE SPECIFIED:
0 PLC ± -
1 PLC ± -
2 PLC ± -
3 PLC ± -
4 PLC ± -
ANGLES ± -

MATERIAL: THERMOPLASTIC

FINISH: -

DWN A GRAFF 4/29/91
CHK W.G.LENKER 7-22-92
APVD — -
PRODUCT SPEC —
APPLICATION SPEC —
WEIGHT —

TE Connectivity

NAME: CABLE CLAMP KIT, STANDARD, SHELL SIZE 11, CPC

SIZE	CAGE CODE	DRAWING NO	RESTRICTED TO
A3	00779	C-206062	—

CUSTOMER DRAWING | SCALE NTS | SHEET 1 OF 1 | REV W