THIS DRAWING IS UNPUBLISHED. RELEASED FOR PUBLICATION -,- .
© COPYRIGHT - By - ALL RIGHTS RESERVED.

REVISIONS

P	LTR	DESCRIPTION	DATE	DWN	APVD
	AE	REVISED PER ECO-12-012316	05JUL12	KH	MZ
	AF	REVISED PER ECO-16-017885	06OCT2017	RS	MZ

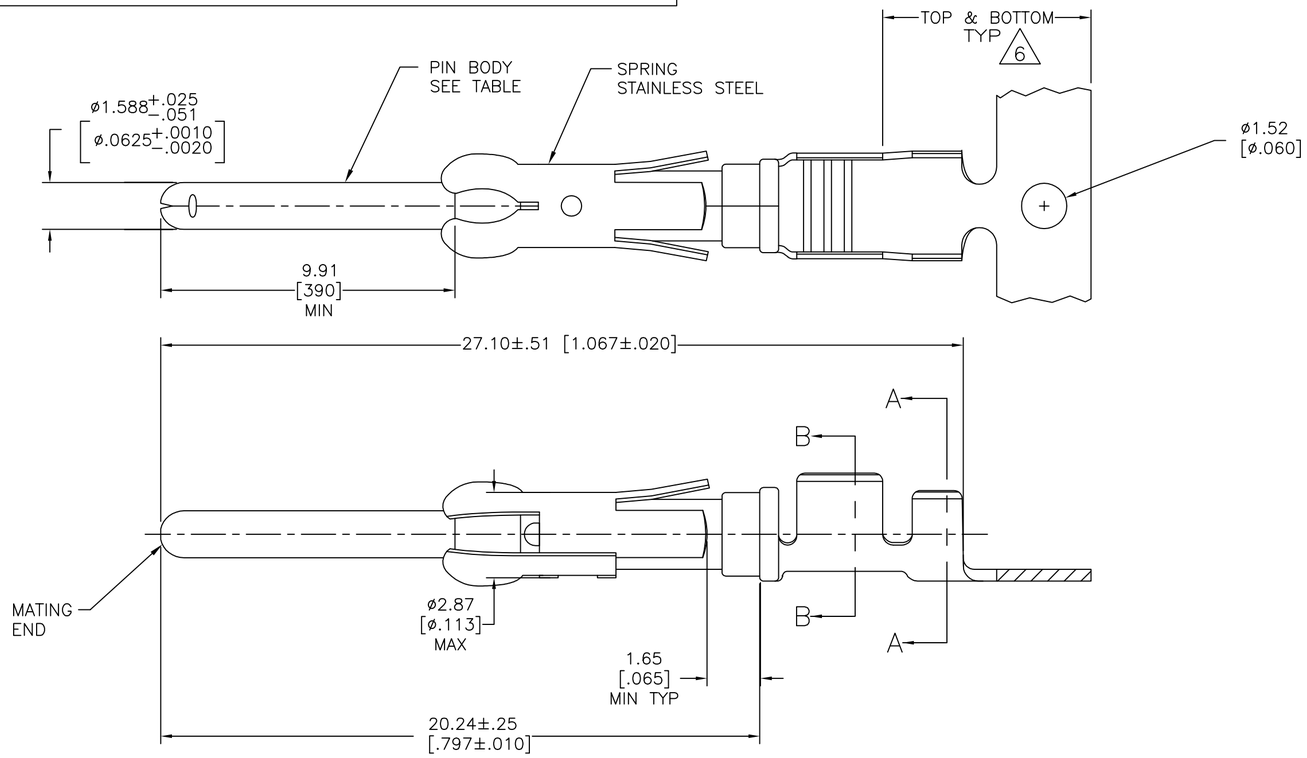

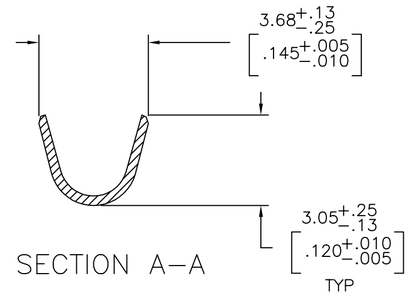

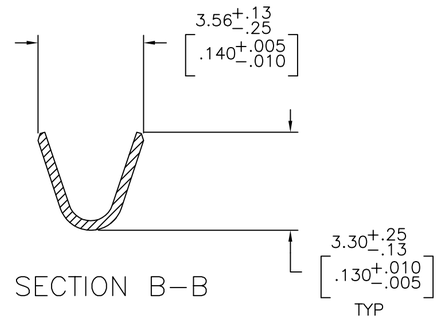

1. REVERSE REELED FOR MINI-APPLICATOR.
2. 0.76µm [.000030] MIN PRECIOUS METAL PLATE ON MATING END FOR A LENGTH OF 5.08 [.200] MIN OVER 1.27µm [.000050] MIN NICKEL. GOLD FLASH ALL OVER. CONFORMS TO THE REQUIREMENTS OF TE CONNECTIVITY PRODUCT SPEC 108-10042, BASED ON EIA/ECA-364-1000.01 (CONTROLLED ENVIRONMENT APPLICATIONS),
3. 0.76µm [.000030] MIN PRECIOUS METAL PLATE ON MATING END FOR A LENGTH OF 5.08 [.200] MIN WITH A UNIFORM GRADIENT TO 0.25µm [.000010] MIN ON REMAINDER, OVER 1.27µm [.000050] MIN NICKEL PLATE. GOLD FLASH ALL OVER. CONFORMS TO THE REQUIREMENTS OF TE CONNECTIVITY PRODUCT SPEC 108-10042, BASED ON EIA/ECA-364-1000.01 (CONTROLLED ENVIRONMENT APPLICATIONS).
4. 0.38µm [.000015] MIN GOLD PER MIL-G-45204 ON MATING END FOR A LENGTH OF 5.08 [.200] MIN WITH 1.27µm [.000050] MATTE TIN PLATE IN WIRE CRIMP AREA, BOTH OVER 1.27µm [.000050] MIN NICKEL PER QQ-N-290.
5. 1.27µm [.000050] MIN TIN-LEAD PER MIL-T-10727 OVER 1.27µm [.000050] MIN NICKEL PER QQ-N-290.
6. GOLD PLATING NEED NOT APPEAR IN THIS AREA.
7. WIRE RANGE 18-14 AWG.
8. INSULATION RANGE 2.03[.080]-2.54[.100] DIA.
9. 0.38µm [.000015] MIN GOLD PER MIL-G-45204 ON MATING END FOR A LENGTH OF 5.08 [.200] MIN, 1.27µm [.000050] MIN TIN-LEAD PER MIL-T-10727 FOR A LENGTH OF 5.69 [.224] MIN ON OPPOSITE END, BOTH OVER 1.27µm [.000050] MIN NICKEL PER QQ-N-290 ON ENTIRE CONTACT.
10. 1.27µm [.000050] MIN TIN PER MIL-T-10727 OVER 1.27µm [.000050] MIN NICKEL PER QQ-N-290.
11. 2.54µm [.000100] MIN SILVER OVER 0.76µm [.000030] MIN NICKEL PER QQ-N-290
12. 0.76µm [.000030] MIN PRECIOUS METAL PLATE ON MATING END FOR A LENGTH OF 5.08 [.200] MIN WITH 1.27µm [.000050] MATTE TIN PLATE IN WIRE CRIMP AREA, BOTH OVER 1.27µm [.000050] NICKEL PLATE. CONFORMS TO THE REQUIREMENTS OF TE CONNECTIVITY PRODUCT SPEC 108-10042, BASED ON EIA/ECA-364-1000.01A (CONTROLLED ENVIRONMENT APPLICATIONS).

	REELING	PIN BODY FINISH	PIN BODY	LOOSE PIECE REF	PART NO
OBSOLETE	1	11	BRASS	–	2-66359-0
	1	10	CU-NI ALLOY	1-66361-6	1-66359-9
	STANDARD	10	BRASS	1-66361-2	1-66359-8
	1	5	CU-NI ALLOY	1-66361-5	1-66359-7
	1	2	CU-NI ALLOY	1-66361-4	1-66359-6
	1	10	PHOSPHOR BRONZE	–	1-66359-5
	1	10	BRASS	1-66361-2	1-66359-4
OBSOLETE	1	9	BRASS	66361-9	1-66359-3
	1	2	PHOSPHOR BRONZE	66361-8	1-66359-2
	1	5	PHOSPHOR BRONZE	66361-7	1-66359-1
	1	12	BRASS	66361-4	1-66359-0
	1	4	BRASS	66361-3	66359-9
	1	5	BRASS	66361-2	66359-6
	1	3	BRASS	66361-1	66359-5
	STANDARD	12	BRASS	66361-4	66359-4
	STANDARD	4	BRASS	66361-3	66359-3
	STANDARD	5	BRASS	66361-2	66359-2
	STANDARD	3	BRASS	66361-1	66359-1

66359

THIS DRAWING IS A CONTROLLED DOCUMENT.

DIMENSIONS: mm [INCHES]

TOLERANCES UNLESS OTHERWISE SPECIFIED:
0 PLC ± –
1 PLC ± –
2 PLC ± 0.13 [.005]
3 PLC ± –
4 PLC ± –
ANGLES ± –

MATERIAL: SEE CALLOUTS
FINISH: SEE TABLE

DWN V. FURLER 23JUL2003
CHK G. STEINHAUER 24JUL03
APVD G. STEINHAUER 24JUL03
PRODUCT SPEC –
APPLICATION SPEC –
WEIGHT –

TE Connectivity

NAME: PIN ASSEMBLY, .062, TYPE III+

SIZE	CAGE CODE	DRAWING NO	RESTRICTED TO
A2	00779	C-66359	–

CUSTOMER DRAWING | SCALE NTS | SHEET 1 OF 1 | REV AF