REVISIONS					
REV	ECO	DESCRIPTION	DATE	BY	APPR
A1	-	FIRST RELEASE	Jun.27,2015	Drack	Tommy
A2	-	UPDATE DRAWING	Mar.22,2017	Regan	Tommy

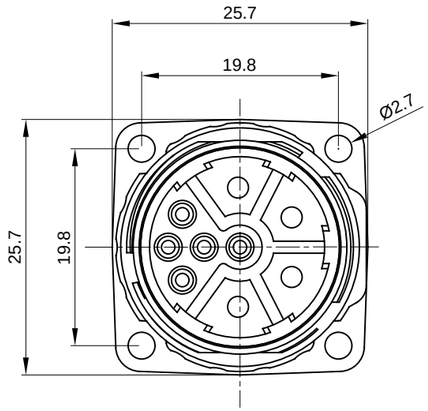

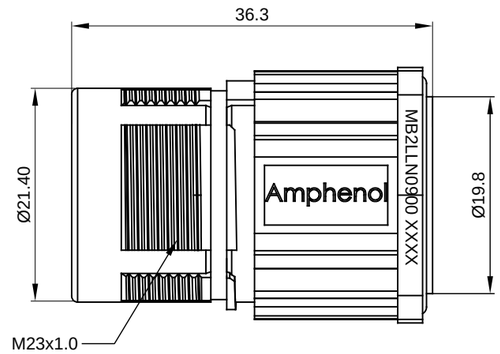

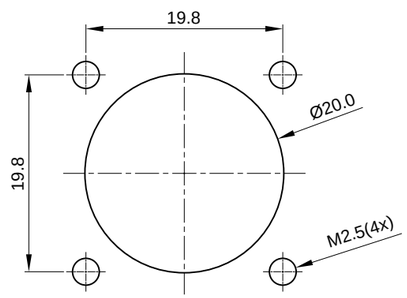

MOUNTING HOLE

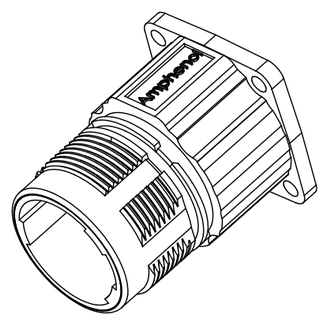

NOTES: UNLESS OTHERWISE SPECIFIED

1. MATERIAL:
   INSULATION INSERT:PA66,UL94 V0
   SEAL: VITON
   HOUSING BODY: ZINC DIE CAST, NICKEL PLATED
   CONTACT: COPPER ALLOY, GOLD PLATED

2. SPECIFICATIONS:
   2.1 CURRENT RATING: SIGNAL: 10 AMPS
   POWER: 30AMPS
   2.2 VOLTAGE RATING: SIGNAL: 250V AC/DC
   POWER: 630V AC/DC
   2.3 CONTACT RESISTANCE: SIGNAL: <5 mOHMS
   POWER: <3 mOHMS
   2.4 OPERATING TEMPERATURE: -20°C TO +130°C
   2.5 DIELECTRIC WITHSTANDING VOLTAGE: LESS THAN 2
   MILLIAMPS CURRENT LEAKAGE @ SIGNAL: 2500VOLTS AC.
   POWER: 6000 VOLTS AC.
   2.6 DEGREE OF PROTECTION: IP67 (MATED CONDITION)
   2.7 DEGREE OF POLLUTION: 3 PER UL840
   2.8 OVERVOLTAGE CATEGORY: III PER UL840
   2.9 MATING CYCLE DURABILITY: >500 CYCLES
   2.10 RoHS COMPLIANT

3. ALL DIMENSIONS ARE FOR REFERENCE USE ONLY.

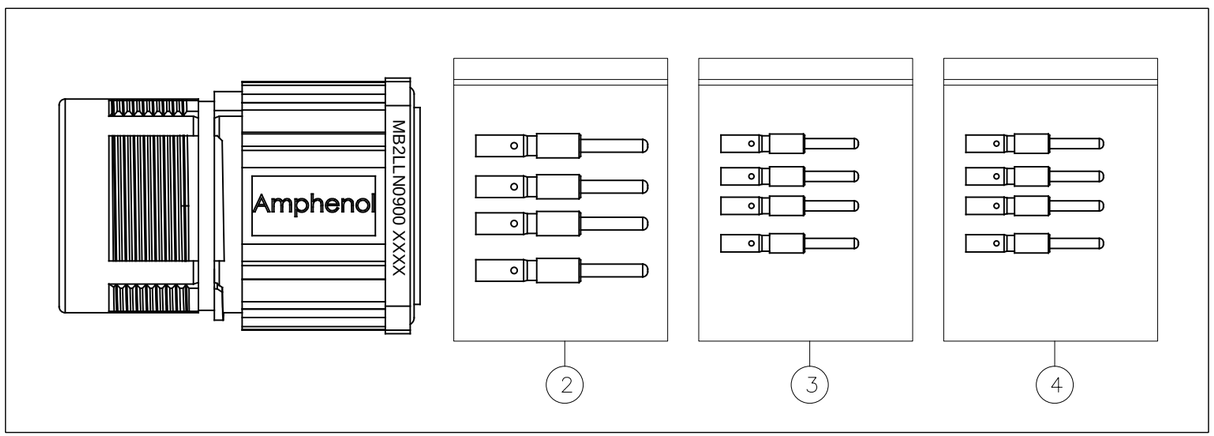

QUANTITY	PART NUMBER	DESCRIPTION	ITEM
5	SC000146	CONTACT, PIN, Ø1.0mm ,Crimp 28~24AWG	4
5	SC000035	CONTACT, PIN, Ø1.0mm ,Crimp 22~18AWG	3
4	SC000036	CONTACT, PIN, Ø2.0mm ,Crimp 14~18AWG	2
1	MB2LLN0900	CONNECTOR	1

MATERIALS LIST

UNLESS OTHERWISE SPECIFIED
1) All dimensions are in metric(mm).
2) Tolerances are as follows:
1 PL DEC ±0.30 | Fractions ±1/64
2 PL DEC ±0.15 | Angles ±1°
3 PL DEC ±0.08
3) Note reference = X

MATERIAL SPECIFICATIONS:

PROCESS SPECIFICATIONS:

NEXT ASS'Y:

SIGNATURES		DATE
DRAWN:	Regan	Mar.22,2017
CHECKED:		
ENGINEER:		
APPROVAL:		
CUSTOMER:		

THIS DRAWING IS SUPPLIED FOR INFORMATION ONLY. DESIGN FEATURES, SPECIFICATIONS AND PERFORMANCE DATA SHOWN HEREON ARE THE PROPERTY OF THE AMPHENOL CORPORATION. NO RIGHTS OF REPRODUCTION ARE IMPLIED. ALL DIMENSIONS ARE SUBJECT TO NORMAL MANUFACTURING VARIATIONS.

Amphenol

Sine Systems - www.amphenol-sine.com
44724 Morley Drive
Clinton Township, MI 48036

KIT:M23,B SERIES,RECEPTACLE,
9 POS(4+5).,PIN CONTACT

SIZE	TYPE	DWG NO:	REVISION
B	C-	MB2LLN0900-KIT	A2

SCALE: NONE SHEET 1 OF 1

TITLE: KIT:M23,B SERIES,RECEPTACLE,9 POS(4+5).,PIN CONTACT
DWG NO: MB2LLN0900-KIT
REV: A2
SH: 1
OF: 1