SIZE	Part Num.	Threading	Jackscrew colour
25	86303639BLF	UNC 4.40	black
	86303644BLF	M3	grey
	86303644B100LF	M3	grey

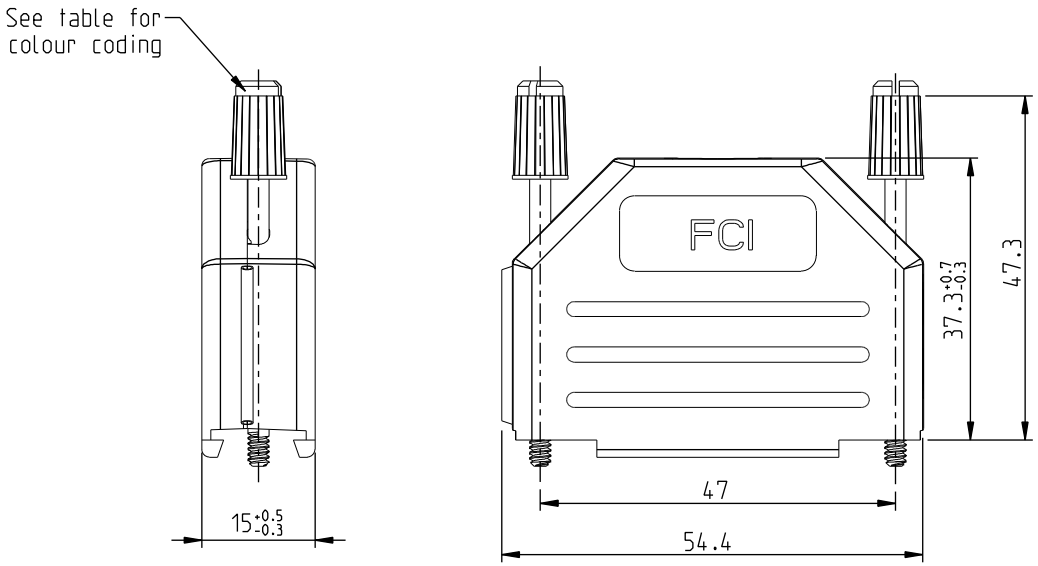

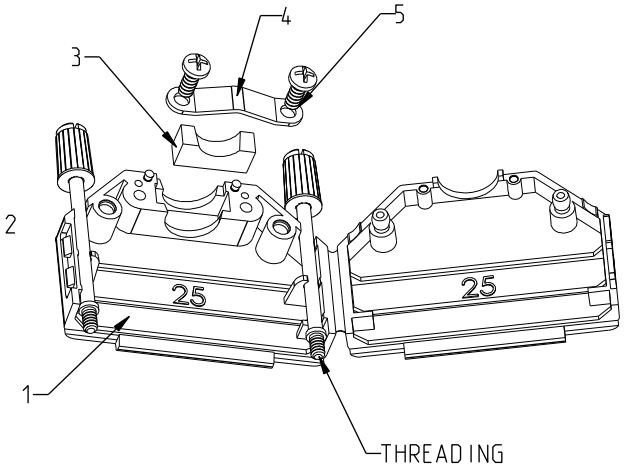

NOTES:

Material: Nylon (UL94V-2)

Cable strain relief: Cable clamp with Self-taping screws

Temperature range: -40°C to 95°C

Cable diameter: 4.0 to 11.0mm

Jackscrew colour: black for 4.40 UNC} grey for M3.0

Packaging:
- Part Num. ending BLF = Box of 100 individual sets.
- Part Num. ending B100LF = Box of bulk components in plastic bags (see quantity on the table).

Cable clamp screwing force (max): 70 Ncm

Jack screws screwing force (max): 50 Ncm

- The "LF" product meets European Union Directives and ohter country regulations as described in GS-22-008.
- The product is not intended to be exposed to a manufacturing solder process.
- packaging spec; see GS-14-920.

DESIGNATION	REP	Qty per set	Qty per bulk
BACKSHELL	1	1	100
JACKSCREWS	2	2	200
GROMMET	3	1	100
CABLECLAMP	4	1	100
SCREWS POZIDRIVE	5	2	200

rev	ecn no	dr	date
A	LS05-0086	LGO	2005/10/10
B	LS06-0084	LGO	2006/06/20
C	LS08-0155	MPE	2008/06/27
D	F09-0223	LSA	2009/11/24
E	F10-0083	LSA	2010/08/04
-	-	-	-
-	-	-	-

www.fciconnect.com

surface - ISO 1302 | tolerance std ISO 406 ISO 1101 | projection | mm

TOLERANCES UNLESS OTHERWISE SPECIFIED

Dr	GOISNARD L	2004.03.22	ANGULAR	LINEAR	0.X	±/
Eng	PESSON M	2004.03.22			0.XX	±/
Chr	LEGARE.P	2004.03.22	0° ±/°		0.XXX	±/
Appr	LEGARE P	2004.03.22	Product family		D-SUB HOODS	

size A3 | Scale 3:2 | ECN F10-0083 | Spec ref -

title: D-SUB PLASTIC SHELLS STRAIGHT SNAP-TOGETHER

dwg no 10061215C | Rev. E

catalog no see tables | CUSTOMER | sheet 1 of 3

Copyright FCI.

REV E - 2006-03-28

PDM: Rev:E STATUS: Released Printed: Jan 23, 2015