24 Pin Plug

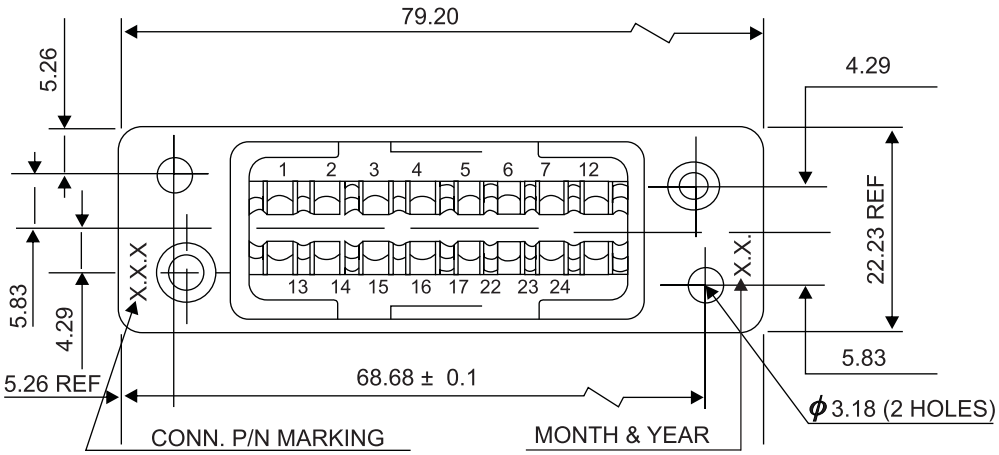

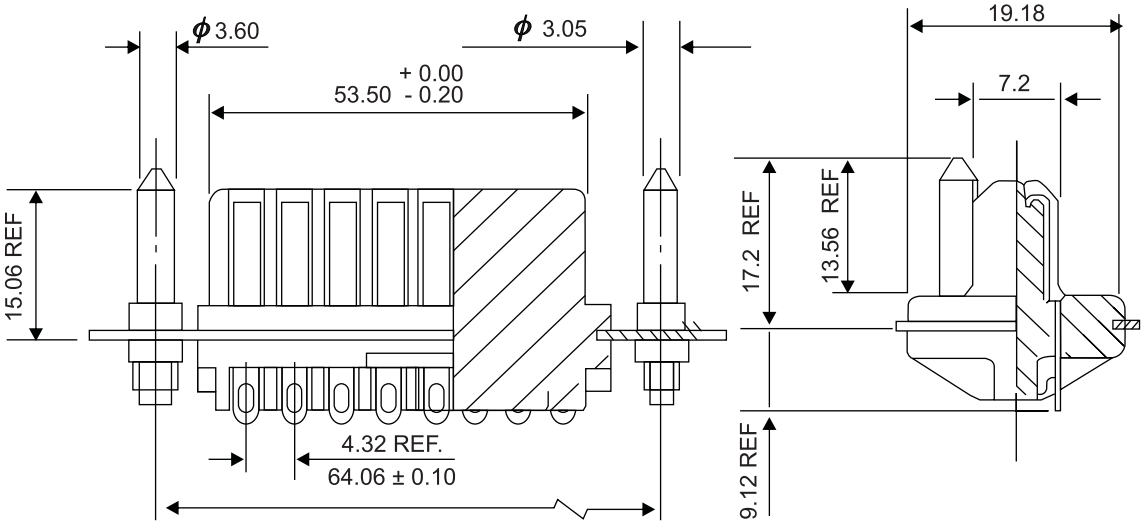

PART NO. DETAILS

SL. NO.	CONNECTOR P/N	NO. OF CONT.	TERMINATION TYPE	CONTACT FINISH	LEVEL
1	26-159-24P	24	SOLDER	GOLD PLATE OVER NICKEL	1
2	26-24P-004	24	SOLDER	GOLD PLATE OVER NICKEL	3
3	26-24P-99	24	SOLDER	SILVER PL. & TIN LEAD SOLDER DIP ON TERMINATION	–

Note: All dimensions are in mm