Safety Legislation/Low Voltage Directive
See introduction page to this colour section.

L1901 Sub-miniature lampholder

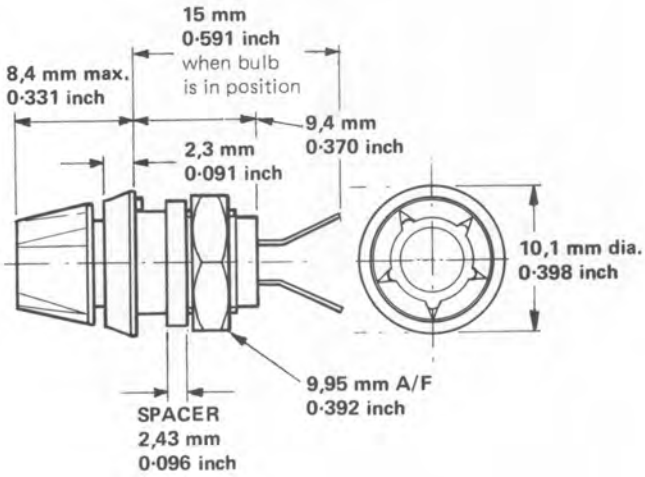

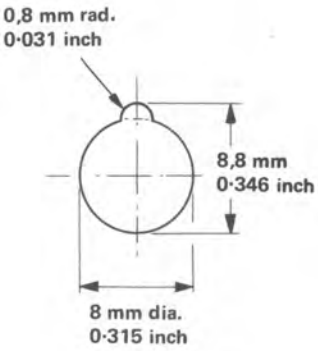

Panel cut-out

A fully insulated, panel mounting, sub-miniature lampholder of metric design for 3 mm tubular flange cap lamps. The lens is available with a choice of 5 colours (see below), and unscrews for lamp replacement. It is supplied with spacer which enables it to be used on very thin panels, if required

Lamp style:	3 mm tubular (T – 1), with flange cap type S3s
Power rating:	⩽0·75 Watt (temperature rise < 40 °C)
Lens colours:	Amber, blue, clear, green or red
Panel thickness (maximum):	6 mm 0·23 inch
Fixing torque:	0,4 N m 3·5 lbf inch
Temperature range:	–40 °C to + 70 °C (Ambient)
humidity	21 days (BS 2011) (part 2, damp heat, long term)
Insulation resistance:	⩾10^3 megohms
Voltage breakdown (to panel)	⩾3 kV at 50 Hz
Materials:	Mouldings – polycarbonate Contacts – brass, silver-plated
Weight (average):	1,9 g 0·07 oz
Belling-Lee reference number:	L1901/Colour of lens

L1896A Low voltage lampholder

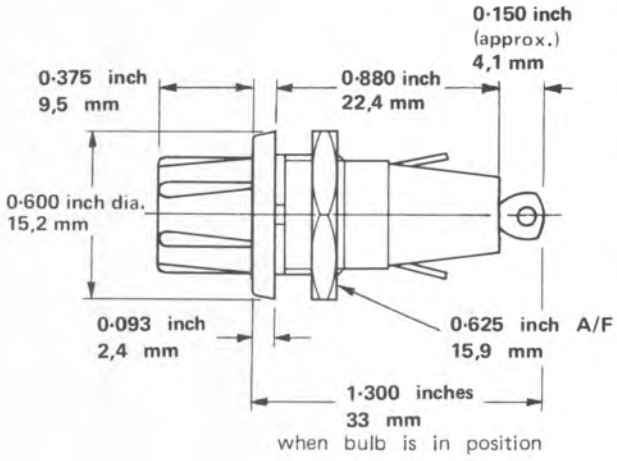

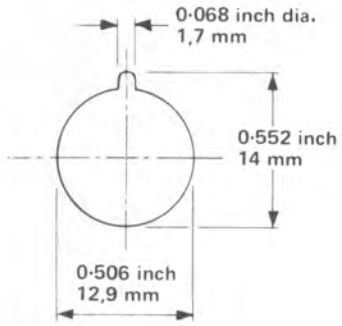

Panel cut-out

This miniature indicator fitting has been designed to match the styling of fuseholders L1596B, E6011B and neon light L1897 shown elsewhere in the green section. It requires the same size panel cut-out and has a single fixing nut. A locating spigot on the underside of the rim prevents rotation.

The bulb is easily removed from the front of the panel after unscrewing the lens.

The lens is available in a choice of 5 colours.

L1896A uses 5 mm tubular L.E.S. lamps (cap E5/8) or 6 mm tubular midget flange lamps (S6s8), covering a range of voltage ratings and filament life requirements.

Mounting rings for both lamps are included.

Power rating(lamp):	⩽1 W (temperature rise ⩽40 °C)
Voltage proof:	2 kV at 50 Hz
Insulation resistance:	> 100 megohms
Temperature range:	–40 °C to +60 °C (Ambient)
Panel thickness (maximum):	0·141 inch 3,6 mm
Fixing torque (maximum):	0,68 N m 6 lbf inch
Lens colours:	Amber, blue, clear, green or red
Materials and finish:	Body moulding – phenolic resin Lens – polycarbonate Contacts – silver-plated
Lamp style:	T1½ 5 mm tubular L.E.S. (cap E5/8) and T1¾ 6 mm tubular midget flange lamp (S6s8).
Weight (average):	4,7 g 0·17 oz
Belling-Lee reference number:	L1896A/Colour of lens Example: L1896A/red

L1897/240 Neon indicator light

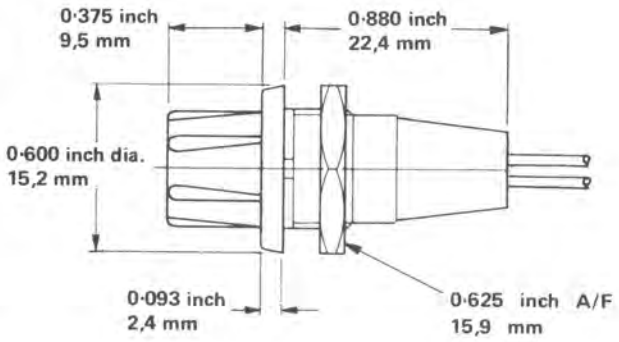

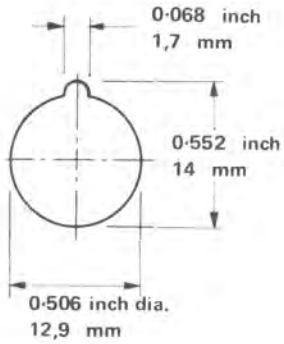

Panel cut-out

Styled to match the L1896A miniature lampholder and L1596B and E6011B fuseholders.

Complete with neon lamp and resistor for instant connection. Attractive in appearance and economically priced.

Voltage range:	200 V to 250 Va.c./d.c.
Breakdown voltage:	>8 kVd.c. (leads to chassis)
Insulation resistance:	>100 megohms (leads to chassis)
Temperature range:	−55 °C to +60 °C (Ambient)
Panel thickness (maximum):	0·141 inch 3,6 mm
Fixing torque (maximum):	0,68 N m 6 lbf inch
Length of wires:	8·75 inches 222,3 mm
Materials:	Body moulding — phenolic resin Lens — polycarbonate
Lens colours:	Amber, clear, or red.
Weight (average):	5,2g 0·18 oz
Belling-Lee reference number:	L1897/240/colour of lens Example: L1897/240/Red

L2009 Panel fuseholder, indicating

20 x 5 mm

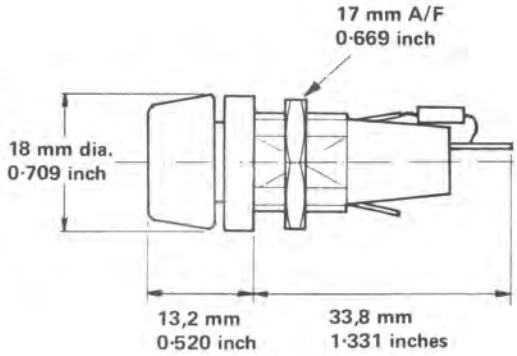

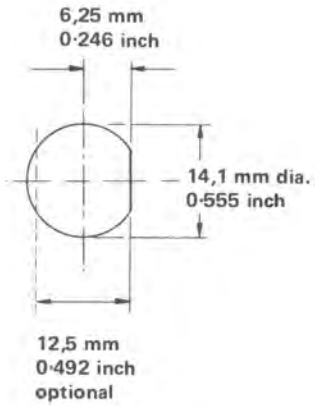

Panel cut-out

A miniature panel fuseholder for 20 x 5 mm fuse links. The fuse carrier (cap) houses a neon lamp which lights and becomes visible through a lens in the top when the fuse link has blown and the power remains on.

Available with a choice of two lens colours, clear or red.

Supplied complete with neon lamp and ballast resistor for 240 Va.c.

Current rating:	6,3 A
Insertion resistance:	10 milliohms maximum
Insulation resistance:	>100 megohms (cap removed)
Voltage breakdown:	>5 kVd.c. (cap removed)
Temperature range:	−40 °C to + 70 °C (Ambient)
Panel thickness:	7,9 mm 0·312 inch maximum
Fixing torque:	0,68 N m 6 lbf inch maximum
Fuse carrier torque:	5 lbf in 0,56 N m maximum
Terminations:	For solderless snap-on connectors 0·110 x 0·024 inch 2,8 x 0,61 mm up to 5 A, or solder (all ratings).
Weight (average):	10,9 g 0·38 oz
Belling-Lee reference number:	L2009/240/Clear or L2009/240/Red

Safety Legislation/Low Voltage Directive
See introduction page to this colour section.

L1848A/240 Panel fuseholder, indicating, size 0

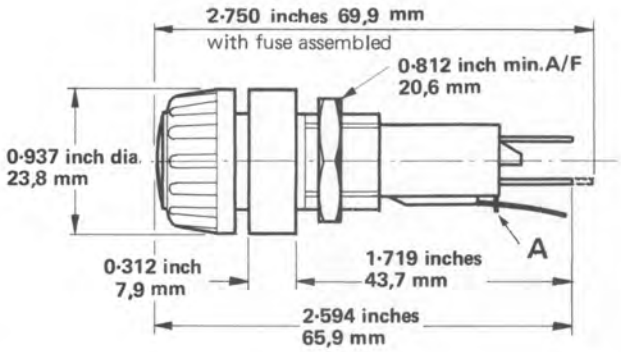

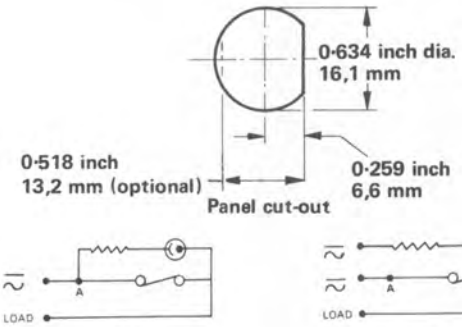

Lamp lights when fuse link blows **Lamp alight when fuse link intact**

Designed for a 1¼ inches x ¼ inch, 32 mm x 6,3 mm size 0, 3AG and IEC 127 Standard Sheet IV fuse link. This panel fuseholder is supplied complete with neon lamp and ballast resistor which may be wired either so that the lamp lights when the fuse link is intact or when the fuse link has been blown.

Bayonet fitting fuse carrier; terminations equally suitable for solderless snap-on connectors 0·250 x 0·032 inch 6,3 x 0,81 mm or soldered connections.

L1848A/240 with 68 kilohms ballast resistor is suitable for 200–260 Va.c./d.c. circuits.

Current rating (maximum):	10 A (15 A @ 55 °C ambient temperature)
Temperature rise:	⩽30 °C
Insertion resistance:	⩽10 milliohms
Ambient temperature range:	–40 °C to + 70 °C
Insulation resistance:	>100 megohms
Voltage breakdown (a.c.):	> 2·5 kV terminations to chassis > 2·5 kV between terminations, cap removed
Panel thickness (maximum):	0·250 inch 6,35 mm
Fixing torque (maximum):	1,36 N m 12 lbf inch
Fuse carrier torque (maximum):	0·565 N m 5 lbf inch
Materials:	Body – moulded plastic lens – moulded low-loss plastic Contacts – brass, silver-plated
Weight (average):	23,6 g 0·83 oz

L675 Panel fuseholder, size 00

Barrier and panel sealed

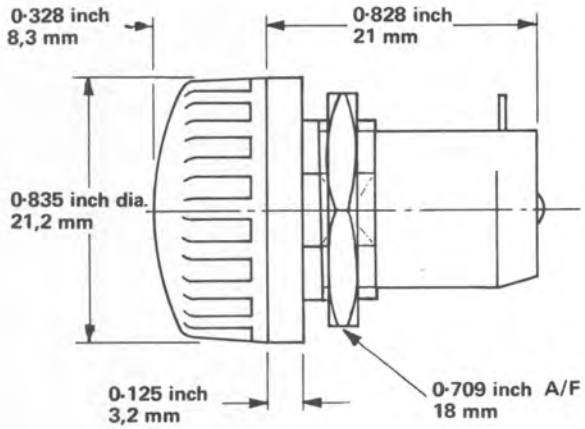

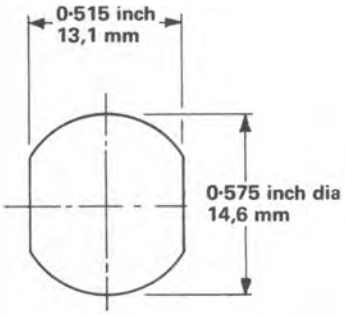

Panel cut-out

This fuseholder was specially designed for the Services for use with heavy duty (high rupturing capacity) fuse links. It is not suitable for use with glass cartridge fuse links.

Specification:	DEF - 64
Current rating:	2 A (temperature rise ⩽ 40 °C)
Breakdown voltage (d.c.):	Sea level >9 kV 60 000 feet 18 000 m 1 kV
Insulation resistance:	>100 megohms
Insertion resistance:	<30 milliohms
Humidity:	H5
Temperature range:	– 55 °C to + 70 °C (Ambient)
Panel thickness (maximum):	0·15 inch 3,8 mm
Fixing torque (maximum):	0,62 N m 5·5 lbf inch
Weight (average):	0·48 oz 13,7 g

Qualification Approved

L575A Panel fuseholder, size 00

With test prod aperture in lid

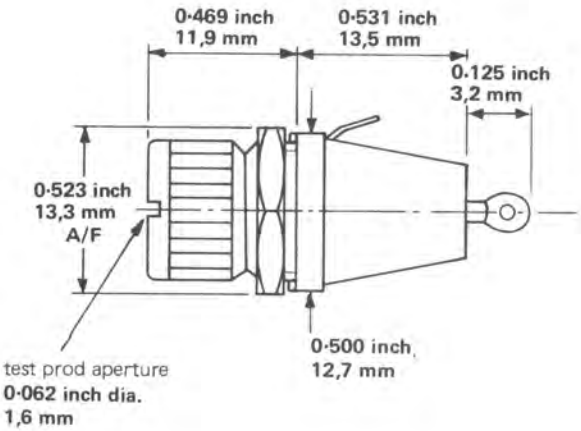

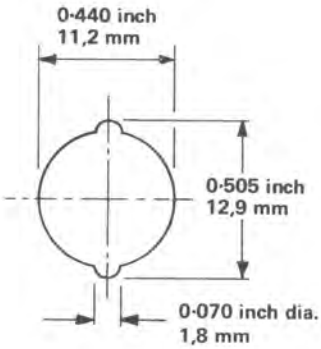

Panel cut-out

This miniature, panel mounting fuseholder was designed for the use of the Services and is recommended for all situations where space is at a premium.

Specification:	RCS 262 Issue 2
Current rating:	2·5 A (temperature rise < 55 °C)
Breakdown voltage (d.c.):	Sea level > 3·5 kV 60 000 feet 18 000 m > 1 kV
Insulation resistance:	> 100 megohms
Insertion resistance:	< 5 milliohms
Humidity:	Class H2
Temperature range:	− 40 °C to +70 °C (Ambient)
Panel thickness (maximum):	0·064 inch 1,6 mm
Fixing torque (maximum):	0,32 N m 2·8 lbf inch
Weight (average):	0·19 oz 5,3 g

Qualification Approved

L1596B Panel fuseholder, Size 00

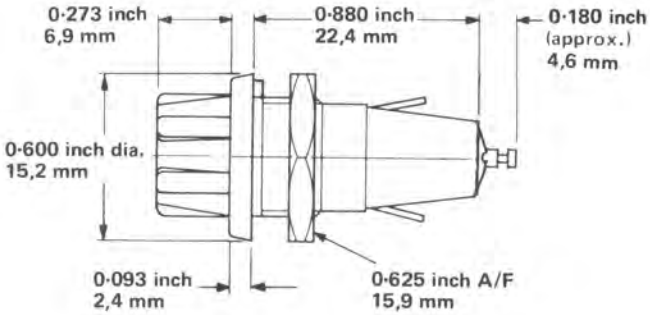

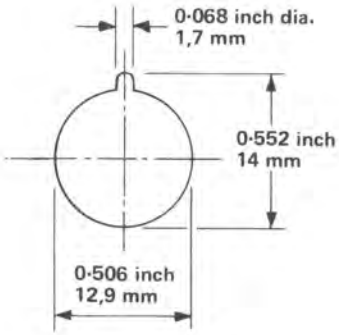

Panel cut-out

A robust, miniature, panel mounting fuseholder of contemporary styling. The fuse link is withdrawn on removal of the screw cap, which has a 'knock-out' for insertion of a test probe, if required.

Current rating:	7 A (temperature rise ⩽ 40 °C).
Breakdown voltage (d.c):	Sea level ⩾ 4 kV 60 000 feet 18 000 m 1 kV
Insulation resistance:	> 100 megohms
Insertion resistance:	< 10 milliohms
Temperature range:	−55 °C to + 70 °C (Ambient)
Panel thickness (maximum):	9/64 inch 3,6 mm
Fixing torque (maximum):	0,68 N m 6 lbf inch
Weight (average):	0·17 oz 4,8 g

Safety Legislation/Low Voltage Directive
See introduction page to this colour section.

L2006A Panel fuseholder
L2007 Dial-a-rating kit (optional)

for 20 x 5 mm fuse link

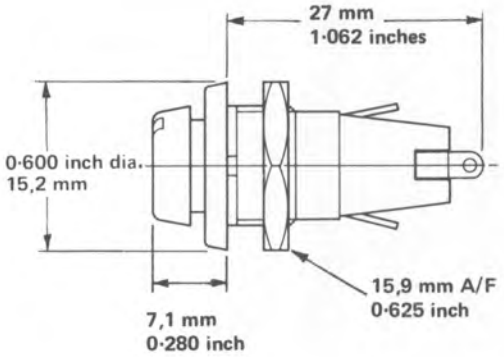

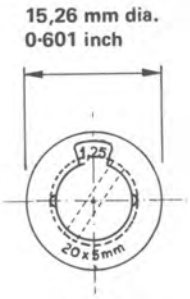

L2007

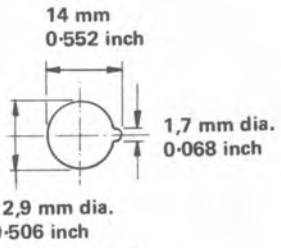

Panel cut-out

This fully finger-proofed panel mounting fuseholder is designed to meet the safety requirements of IEC 257, DEMKO, NEMKO and SEMKO, and BS 415.

L2007, Dial-a-rating accessory kit enables the value of the fitted fuse like to be readily indicated.

Mounting on the panel is effected through a single hole and secured by a nut. A locating spigot on the underside of the rim prevents rotation.

Current rating:	6,3 A (temperature rise < 65 °C on accessible parts).
Test voltage:	4 k V d.c. 50 cycles 1 minute
Insertion resistance:	5 milliohms av., 10 milliohms max.
Breakdown voltage (d.c.):	> 4 kV
Insulation resistance:	⩾ 100 megohms
Temperature range:	– 55 °C to + 70 °C (Ambient)
Panel thickness:	0,91 to 3,58 mm 0·036 - 0·141 inch
Recommended fixing torque:	0,68 N m 6 lbf in
Conductor size (maximum):	1,2 mm diameter, 24/0,2 mm or 18 s.w.g.
Weight (average):	4,7 g 0·17 oz
Belling-Lee reference number:	
Fuseholder:	L2006
Dial-a-rating kit:	L2007/A for fuse ratings 1, 1,25, 1,6, 2, 2,5, 3,15, 4, 5, 6,3 A
Dial-a-rating kit:	L2007/B for fuse ratings 0,032, 0,04, 0,05, 0,063, 0,08, 0,1, 0,125, 0,16, 0,2, 0,25, 0,315, 0,4, 0,5, 0,63, 0,8 A

E6011B Panel fuseholder

for 20 x 5 mm fuse link

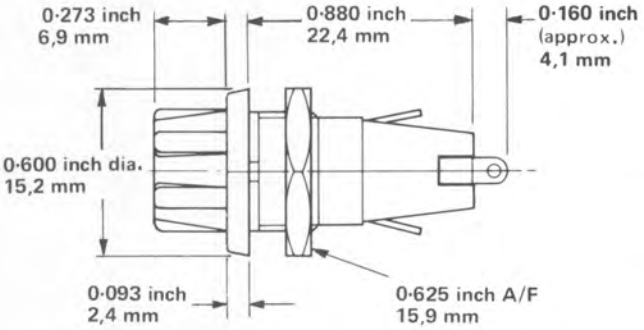

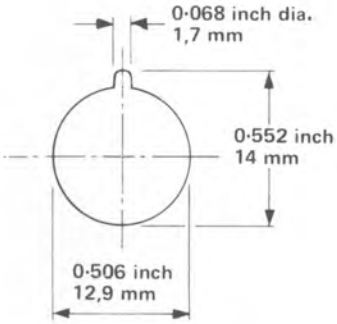

Panel cut-out

Current rating:	6,3 A
Voltage rating:	250 Va.c.
Breakdown voltage (d.c.):	Sea level ⩾ 4 kV 60 000 feet 18 000 m 1 kV
Insulation resistance:	> 100 megohms
Insertion resistance:	< 10 milliohms
Temperature range:	–55 °C to + 70 °C (Ambient)
Panel thickness (maximum):	9/64 inch 3,6 mm
Fixing torque (maximum):	0,68 N m 6 lbf inch
Weight (average):	0·17 oz 4,8 g

L1742 Panel fuseholder, barrier and panel sealed,
for 20 x 5 mm fuse link

L1742/U Panel fuseholder, unsealed
for 20 x 5 mm fuse link

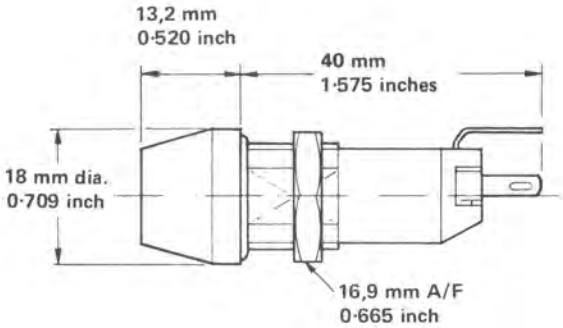

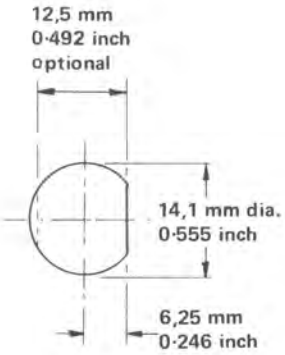

Panel cut-out

These panel mounting fuseholders for 20 x 5 mm fuse links are designed to meet the safety requirements of IEC 257, DEMKO, NEMKO, and SEMKO. A coin slot in the fuseholder head facilitates easy fuse link removal.

Mounting on the panel is effected through a single hole, shaped to engage the anti-swivel flats on the fuseholder body, which is secured with a nut.

The connector posts are suitable for soldering or for solderless snap-on connectors.

Current rating:	6,3 A
Insertion resistance (maximum):	10 milliohms
Breakdown voltage (d.c.):	$>$3 kV
Insulation resistance:	$\geqslant$100 megohms
Temperature range:	– 55 °C to + 70 °C (Ambient)
Sealing:	Leakage less than 1 cc/h @ 15 lbf/inch^2 100 kPa
Panel thickness (maximum):	0·315 inch 8 mm
Contacts:	Nickel-plated brass
Terminations:	0·110 x 0·024 inch 2,8 x 0,61 mm
Weight (average):	15,5 g 0·55 oz

L1745 In-line fuseholder, size 0

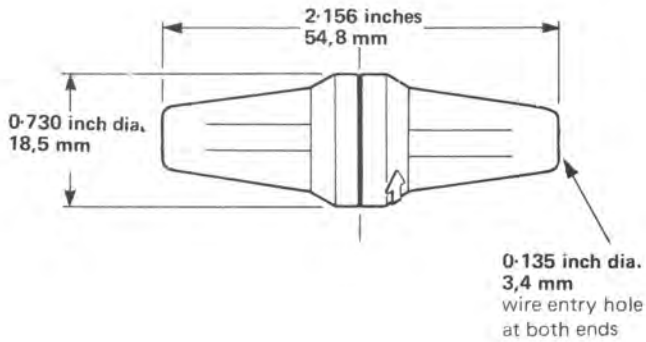

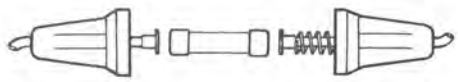

Simply and economically wired into a supply line, the L1745 accommodates a 1¼ inches x ¼ inch 32 mm x 6,3 mm fuse link. The circuit is broken when the fuseholder is opened by a simple push-and twist operation.

Colour:	Black
Current rating:	7 A (temperature rise $\leqslant$ 25 °C)
Insertion resistance (maximum):	15 milliohms
Insulation resistance (minimum):	100 megohms
Maximum safe working voltage (BS 415):	34 V peak
Temperature range:	–25 °C to +60 °C (Ambient)
Connections:	Solder
Maximum wire size:	70/0·0076 inch 30/0,25 mm, overall diameter 0·125 inch 3,18 mm
Weight (average):	5,18 g 0·18 oz
Belling-Lee reference number:	L1745/Black

L2004 Panel fuseholder, size 0

(Adaptor available for 20 x 5 mm fuse links)

L2003 Coloured bezel for above

(L2004 Supplied complete with black bezel)

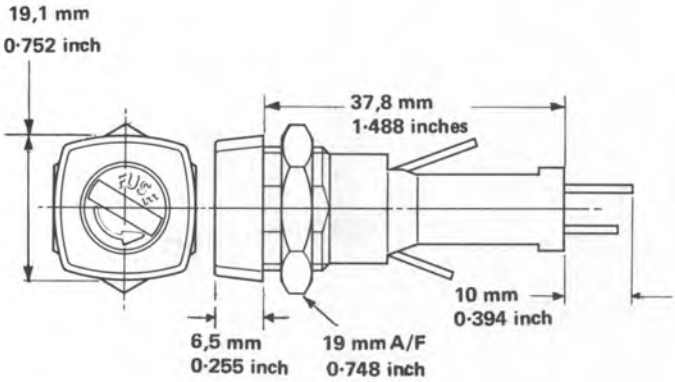

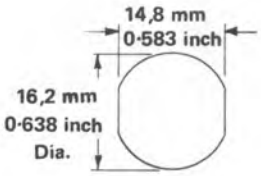

Panel cut-out

The L2004 is a fully fingerproof safety fuseholder designed to comply with the requirements of Publications IEC 257, and BS 415. The fuseholder is supplied with a black removable bezel, which snaps into place over the front flange. Other bezels in green, grey, red and white can be purchased in packs of 50, quoting quantity required and Belling-Lee reference number L2003/Colour.

Adaptor: Order L1940A for use with 20 x 5 mm fuse links.

Current rating:	15 A (temperature rise ⩽ 40 °C above ambient) 10 A (when tested in accordance with IEC 257) 30 A (BS AU 105)
Breakdown voltage:	⩾4 k Vd.c.
Insulation resistance:	⩾100 megohms
Insertion resistance:	⩽5 milliohms
Temperature range:	− 25 °C to + 85 °C (Ambient)
Humidity:	21 days (BS 2011 – IEC 68–1)
Panel thickness:	4 mm maximum
Fixing torque:	10·6 lbf inch 1,2 Nm
Weight (average):	9,7 g 0·342 oz
Terminations:	Will accept two sizes of solderless snap-on connectors 0·250 x 0·032 inch 6,3 x 0,81 mm and 0·187 x 0·032 inch 4,75 x 0,81 mm, or solder

L1744A Panel fuseholder, bayonet locking, size 0

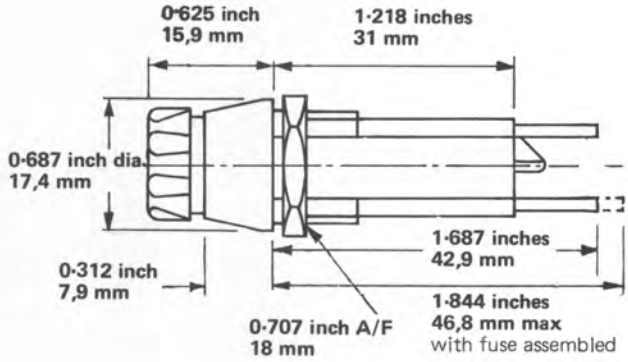

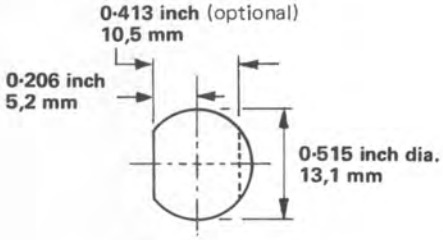

Panel cut-out

A panel mounting fuseholder for a 1¼ inches x ¼ inch, 32 mm x 6,3 mm fuse link, fitting a 0·515 inch diameter panel cut-out. It has a bayonet locking cap, and connection posts suitable for soldering or for 0·250 inch x 0·032 inch 6,3 mm x 0,81 mm solderless snap-on connectors. A special internal insulation barrier is incorporated to provide superior breakdown voltage performance.

Current rating:	10 A (temperature rise ⩽ 40 °C above ambient) 20 A (BS AU 105)
Breakdown voltage (a.c.):	>4 kV between terminations >10 kV terminations to panel
Insulation resistance:	>100 megohms
Insertion resistance:	<15 milliohms
Humidity:	21 days (BS 2011 – IEC 68–1)
Temperature range:	− 55 °C to +70 °C (Ambient)
Panel thickness (maximum):	0·313 inch 7,9 mm
Fixing torque (maximum):	1,18 N m 10 lbf inch
Mouldings:	Phenolic resin
Contacts:	Brass, silver-plated
Weight (average):	13,7 g 0·48 oz

L1382 Panel fuseholder, size 0

Barrier and panel sealed

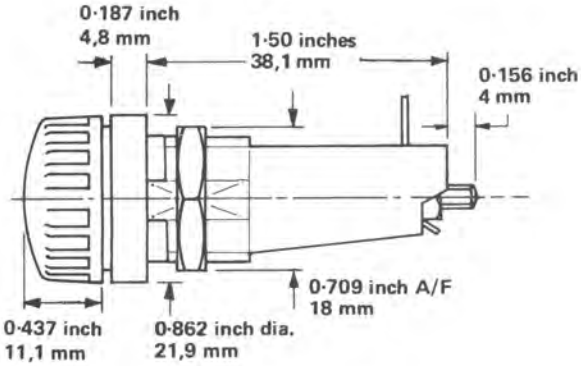

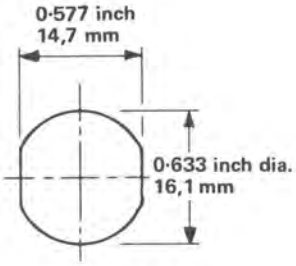

Panel cut-out

Originally developed for use with heavy duty size 0 fuse links, the design has now been modified to accommodate glass cartridge fuse links as well. The L1382/H variant has a test prod aperture 0·094 inch 2,4 mm diamter in the head.

Another variant, L1382/LIVE, has received qualification approval by the Post Office. It is marked with the Post Office reference number P.O.136F and the end terminal is marked LIVE.

Specification:	DEF – 64
Current rating:	7 A (temperature rise ⩽ 40 °C) (15 A at 55 °C maximum)
Breakdown voltage (d.c.):	>10 kV
Insulation resistance:	> 100 megohms
Insertion resistance:	< 15 milliohms
Humidity:	H5 (DEF – 5011)
Temperature range:	– 55 °C to +70 °C (Ambient)
Panel thickness (maximum):	0·156 inch 4 mm
Fixing torque:	1,7 N m 15 lbf inch
Weight (average):	0·84 oz 23,4 g

Qualification Approved

L1348A Panel fuseholder, size 0

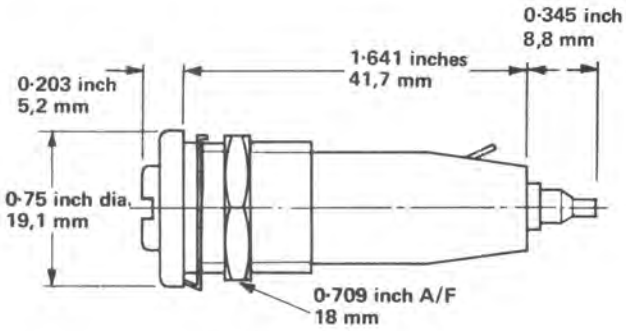

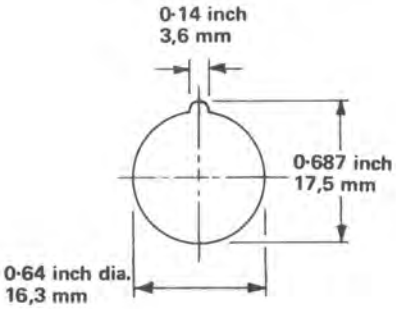

Panel cut-out

This standard size 0 panel fuseholder, used throughout the instrument industry, is also extensively used by H.M. Services and the Post Office.

Current rating:	7 A (temperature rise ⩽ 40 °C) 15 A at 55 °C maximum ambient temperature
Breakdown voltage (d.c.):	>9 kV
Insulation resistance:	> 100 megohms
Insertion resistance:	<5 milliohms
Humidity:	H2 (RCS 11)
Temperature range:	–40 °C to +100 °C (Ambient)
Panel thickness (maximum):	0·4 inch 10 mm
Fixing torque:	0,57 N m 5 lbf inch
Weight (average):	0·7 oz 197, g

Safety Legislation/Low Voltage Directive
See introduction page to this colour section.

L1045/C3 Single fusebox, size 0

With end and rear wire entries

Scale 1:2

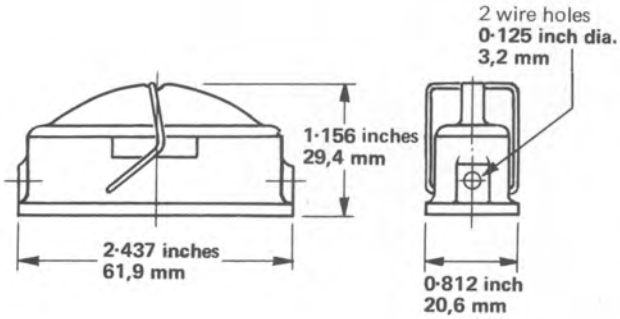

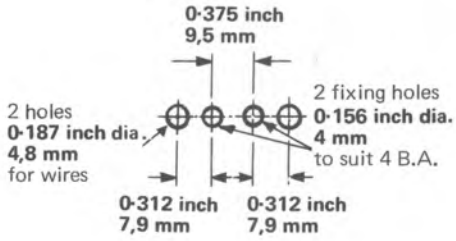

Panel cut-out

Designed for chassis mounting. A standard 1¼ inches x ¼ inch 32 mm x 6,3 mm fuse link is held in the lid and automatically exposed and isolated from the circuit as the lid is raised. Leads may be inserted through the base or through the ends of the box.

Current rating:	10 A (temperature rise ⩽ 40 °C)
Breakdown voltage (d.c.):	to chassis > 4 kV
Temperature range:	−40 °C to +85 °C (Ambient)
Weight (average):	22,1 g 0·78 oz

L1033/C4 Double fusebox, size 0

With end and rear wire entries
A two-pole version of L1045/C3

Scale 1:2

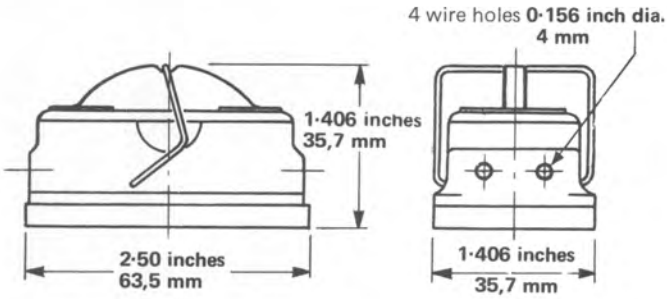

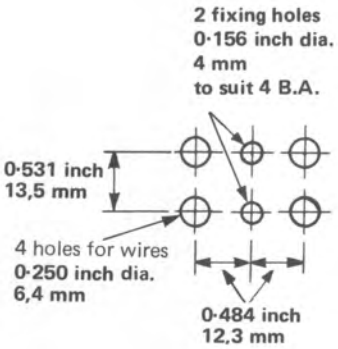

Panel cut-out

Current rating:	10 A (temperature rise ⩽ 40 °C)
Breakdown voltage (d.c.):	Between poles > 8 kV Poles to chassis > 4 kV
Temperature range:	−40 °C to +85 °C (Ambient)
Weight (average):	47 g 1·68 oz

Heavy duty panel fuseholders, barrier and panel sealed
L1302/B Body
L1302A/L large lid
L1303/L standard lid

Scale 1:2

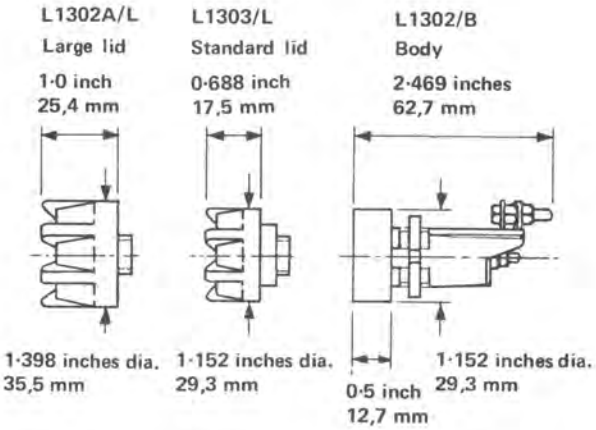

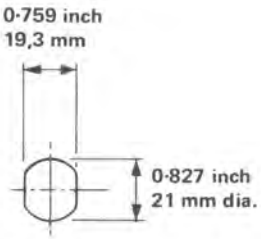

Panel cut-out

These panel mounting fuseholders for size 1 fuse links, were developed for use in military, sea and land vehicles. They also have many industrial applications.

The fuseholders have different lids, either the standard or large, the latter providing a finger guard and increased creepage path for additional safety under wet conditions, thus permitting a higher working voltage to be used.

Fuse link withdrawal occurs automatically as the lid is unscrewed.

Mounting on the panel is effected through a single hole, shaped to engage the anti-swivel flats on the fuseholder body, which is secured with a ring-nut.

The terminals are supplied complete with washer and shakeproof nuts.

Current rating:	15 A (temperature rise ⩽ 40 °C)		
Maximum working volts (Services' rating):	L1302/B – L1302A/L	620 V peak	
	L1302/B – L1303/L	250 V peak	
Insulation resistance:	> 100 megohms		
Insertion resistance:	< 5 milliohms		
Temperature range:	−40 °C to + 100 °C (Ambient)		
Sealing:	Leakage less than 1 cc/h at 15 lbf/inch² 100 kPa		
Panel thickness (maximum):	0·204 inch 5,2 mm		
Weight (average):	with large lid	2·47 oz	70 g
	with standard lid	2·0 oz	57 g

Heavy duty panel fuseholder, barrier and panel sealed
L1304/B Body
L1304/L large lid
L1305/L standard lid

Scale 1:2

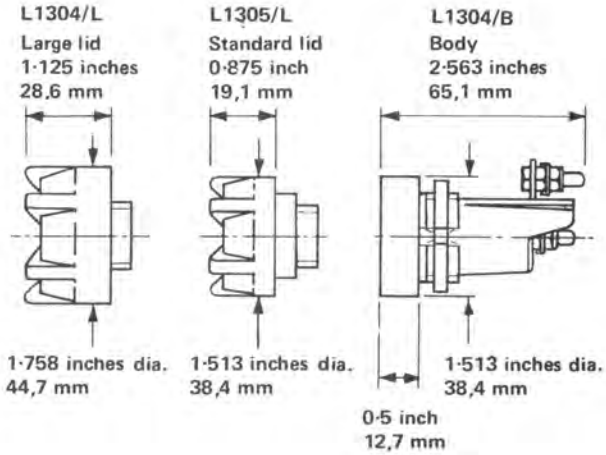

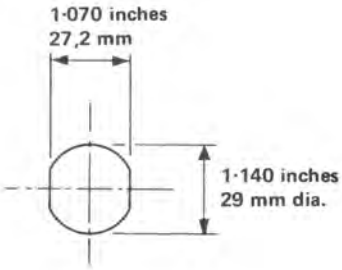

Panel cut-out

These two fuseholders are similar to the size 1 fuseholders, but are designed to accommodate the larger size 2 fuse links.

Current rating:	30 A (temperature rise ⩽ 40 °C)		
Maximum working volts (Services' rating):	L1304/B – L1304/L	620 V peak	
	L1304/B – L1305/L	250 V peak	
Insulation resistance:	> 100 megohms		
Insertion resistance:	< 5 milliohms		
Temperature range:	−40 °C to + 100 °C (Ambient)		
Sealing:	Leakage less than 1 cc/h at 15 lbf/inch² 100 kPa		
Panel thickness (maximum):	0·204 inch 5,2 mm		
Weight (average):	with large lid	4·4 oz	125 g
	with standard lid	4·2 oz	120 g

Safety Legislation/Low Voltage Directive
See introduction page to this colour section.

L1383 Open fuseholder, size 00
L1426 Open fuseholder, 20 x 5 mm

Single pole, for printed circuits of 0·1 inch module

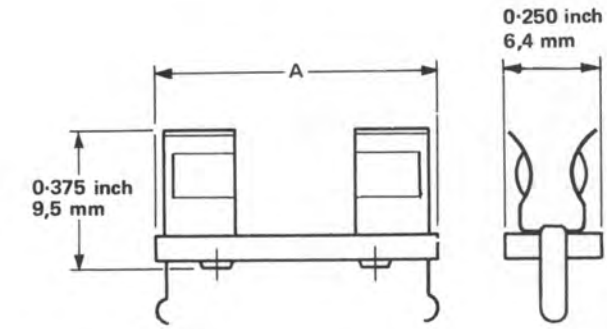

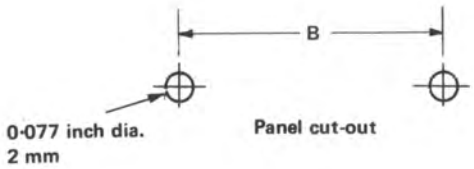

Dimension	L1383	L1426
A	0·735 inch 18,7 mm	0·937 inch 23,8 mm
B	0·700 inch 17,8 mm	0·900 inch 22,9 mm

Mounted by means of its terminals, the fuseholder may be connected and secured in position in a single soldering operation.

Current rating:	2 A (temperature rise ⩽ 40 °C)		
Breakdown voltage (d.c.):	Sea level > 3 kV		
Insulation resistance:	30 x 10^3 megohms		
Insertion resistance:	< 4 milliohms		
Humidity:	Dry conditions only		
Ambient temperature (maximum):	90 °C		
Panel thickness (maximum):	0·063 inch 1,6 mm		
Materials:	Insulant – S.R.B.P. Contacts – beryllium-copper, silver-plated.		
Weights (average):	L1383	0·03 oz	0,9 g
	L1426	0·036 oz	1,02 g

L510 Open fuseholder, size 0

Single pole

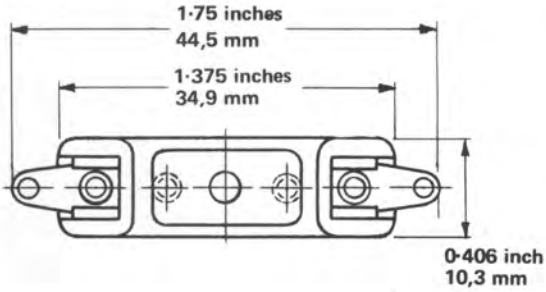

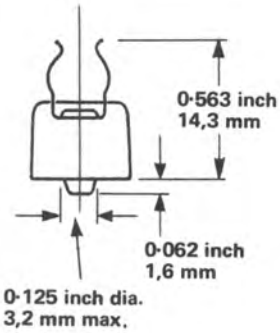

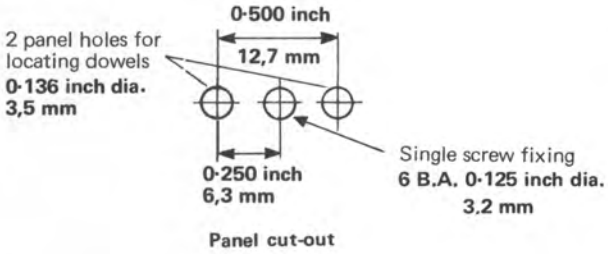

This chassis mounting, single fuseholder is fixed by means of a central screw, and has dowels to prevent rotation.

Current rating:	7 A (temperature rise ⩽ 40 °C)
Breakdown voltage (d.c.):	> 8 kV
Insulation resistance:	> 10^3 megohms
Insertion resistance:	< 10 milliohms
Humidity:	H2 (RCS 11)
Temperature range:	−40 °C to + 70 °C (Ambient)
Materials:	Moulding – phenolic resin Contacts – phosphor-bronze, silver-plated
Weight (average):	0·13 oz 3,71 g

L2005 Open fuseholder, 20 x 5 mm

Twelve-way

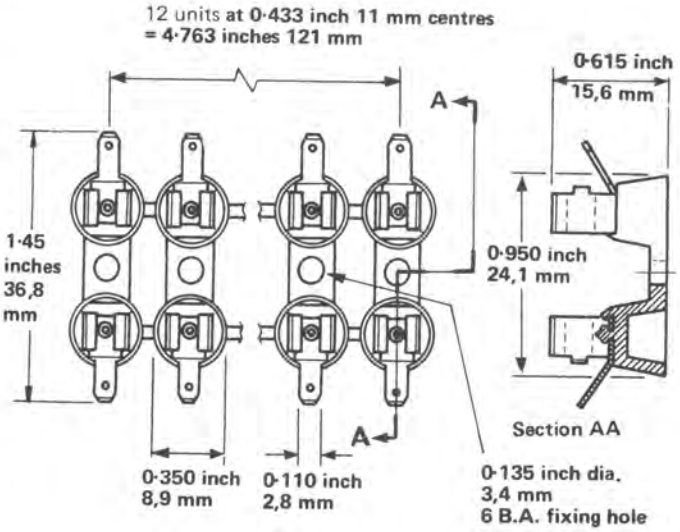

A European version of L1746

Current rating:	2 A at 85 °C maximum ambient 6·3 A at 60 °C maximum ambient
Insertion resistance (maximum):	5 milliohms per pole
Breakdown voltage:	5 kV minimum at 50 Hz
Insulation resistance (minimum):	100 megohms
Temperature range:	−55 °C to + 100 °C (Ambient)
Terminations:	Suitable for solderless snap-on connectors 0·110 inch x 0·012 inch 2,8 mm x 0,3 mm up to 5 A or soldered (wire to be wrapped first) for > 5 A
Materials:	Insulant — nylon Contacts — phosphor-bronze silver-plated
Mounting:	12 holes 6 B.A. clearance at 1 per fuseway
Weight (average):	16,3 g 0·57 oz

L1746 Open fuseholder Size 0

Twelve-way

Scale 1:2

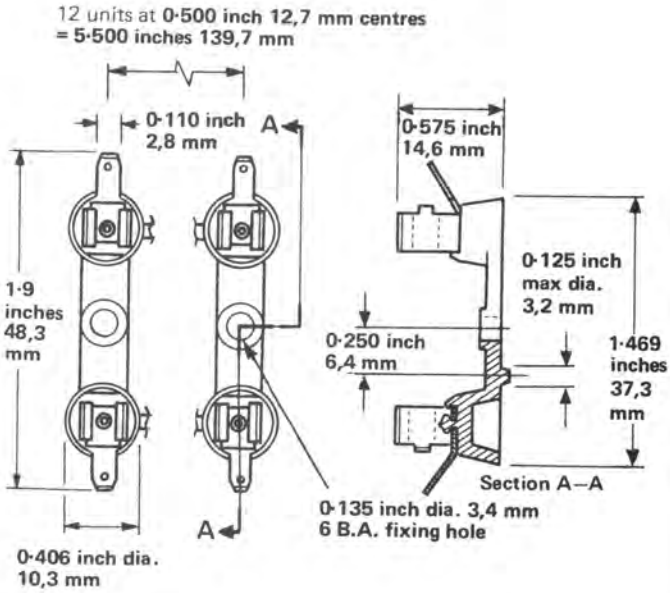

Although normally supplied as a 12-way assembly, this is easily divisible into smaller units as required.

Current rating:	5 A at 75 °C maximum ambient 7·5 A at 50 °C maximum ambient
Insertion resistance (maximum):	5 milliohms per pole
Breakdown voltage:	6 kV minimum at 50 Hz
Insulation resistance (minimum):	100 megohms
Temperature range:	−55 °C to +100 °C (Ambient)
Terminations:	Suitable for solderless snap-on connectors 0·110 inch x 0·012 inch 2,8 mm x 0,3 mm up to 5 A or soldered (wire to be wrapped first) for >5 A.
Materials:	Insulant — nylon Contacts — phosphor-bronze, silver-plated
Mounting:	12 holes 6 B.A. clearance at 1 per fuseway with dowels removed. When mounted singly an additional hole 0·129 inch 3,3 mm diameter is required for dowel.
Weight (average):	20,7 g 0·73 oz

Safety Legislation/Low Voltage Directive
See introduction page to this colour section.

PP499 Fuseclip

for ¼ inch nominal dia. (6,35 mm) fuse link

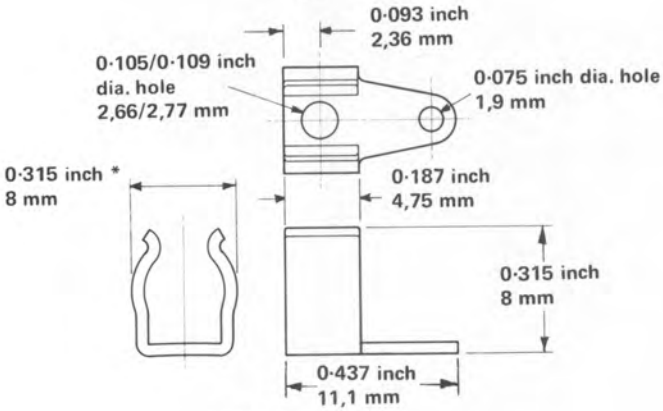

Y14219 Fuseclip

for ¼ inch nominal dia. (6,35 mm) fuse link

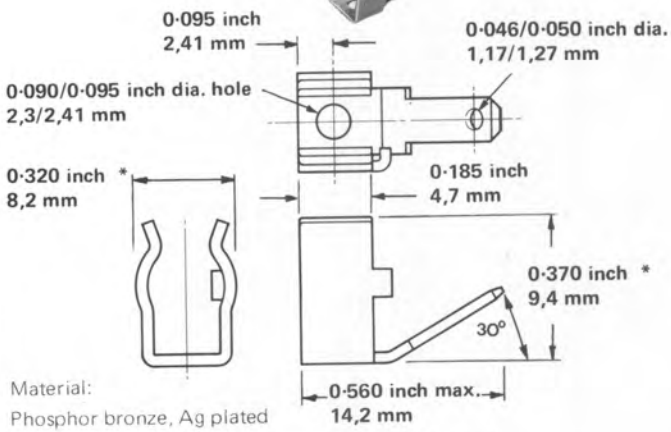

Material:
Phosphor bronze, Ag plated

* with maximum fuse link inserted

PP499 is the fuse clip used in fuseholder type L510 shown on page 11 Y14219 is used in L1746 described on a separate page. Both clips can be supplied loose for mounting on customers' own panels.

These fuse clips are made of phosphor-bronze, which is superior to brass for this purpose, and are silver-plated for low contact resistance. Contact pressure can be increased, if desired, by gently squeezing the two wings closer together. The current rating is determined by the temperature attained by the contacts, which, amongst other things, is dependent upon the type of fuse link and the conductors used, and should not exceed 110 °C.

PP499 is intended for soldered connections, but Y14219 may also be used with 0·110 x 0·012 inch (2,8 x 0,3 mm) push-on connectors at currents up to 5 A, and incorporates a retaining ear controlling axial displacement of the fuse link.

Recommended mounting hole dimensions

Nominal length of fuse link		Dimension A	
inch	mm	inch	mm
5/8	16	0·438	11,1
3/4	19	0·563	14,3
7/8	22	0·688	17,5
1	25	0·813	20,7
1.1/16	27	0·876	22,3
1.1/4	32	1·063	27

L1940A Adaptor

For 20 x 5 mm fuse link

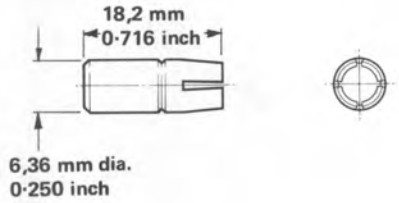

This adaptor permits the use of 20 x 5 mm fuse links, in panel fuseholders designed for size 0 fuse links (1¼ inches x ¼ inch diameter 32 mm x 6,3 mm).

Current rating:	6,3 A
Material:	Brass, nickel-plated
Weight (average):	3,43 g 0·12 oz