L562 Miniature glass fuse links, size 00

5/8 inch x 3/16 inch diameter 15,9 mm x 4,7 mm

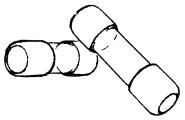

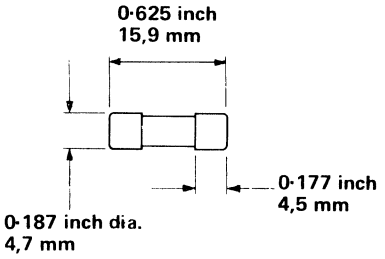

This range of miniature fuse links was developed originally for Services' use, but has many applications in instrumentation, electronic data processing machines, printed circuitry, and all miniaturised equipment.

The higher ratings (250 mA and over) blow within 10 seconds at twice their rated current 2 In, lower ratings at 3 In.

De-rating factor for operation at elevated temperatures: 1·75 % per 10 °C up to 100 °C.

Breaking capacity:	See table
Life:	⩾ 1 000 hours continuous at rated current at 25 °C.
Marking:	Rated value on cap
Weight (average):	0,61 g 0·02 oz
Belling-Lee reference number:	L562/current rating in amperes Example: L562/·050 is a 50 mA fuse link.

Fuseholders which will accept this type of fuse link, are shown elsewhere in the green section.

Continuous rating 1 000 h	Rated voltage d.c. +	a.c. ‡
50 mA	900 V	250 V
100 mA	900 V	250 V
150 mA	600 V	250 V
250 mA	600 V	250 V
350 mA	300 V	250 V
500 mA	300 V	250 V
1 A	200 V	250 V
2.5 A	150 V	150 V
4 A	60 V	60 V
5 A	60 V	60 V
7 A	60 V	60 V

+ based on maximum breaking cap. of 10 In.

‡ based on maximum breaking cap. of 10 In or 35 A whichever is greater

L754 Miniature, ceramic fuse links, size 00

5/8 inch x 3/16 inch diameter 15,9 mm x 4,7 mm

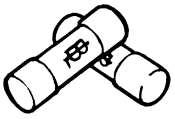

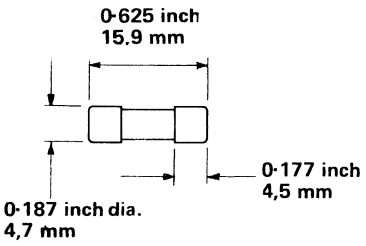

High rupturing capacity fuse links with a range from 50 mA to 2 A and a category of duty 250 V AC2, 230 V DC2 (maximum prospective overload 4 000 A at 0·4 pf and 250 Va.c., or 230 Vd.c. time constant ⩾ 0·004).

Minimum life:
1 000 hours continuous at rated current at temperatures up to 35 °C
1 000 hours continuous at 80 % of rated current at temperatures beyond 35 °C up to 85 °C.

Temperature range: −60 °C to +85 °C (Ambient)

Minifuses:
The L754 range of fuse links has been extended downwards for instrument protection and other light duty applications by the addition of 10, 15 and 25 mA ratings.

Specification:	DEF – 63 – A
Humidity classification:	DEF – 133
Marking:	Body marked with rating.
Weight (average):	0,85 g 0·03 oz
Belling-Lee reference number:	L754/current rating in amperes Example: L754/·050 is a 50 mA fuse link.

Fuseholders which will accept this type of fuse link, are shown elsewhere in the green section.

Continuous rating 1 000 hours Nominal at 35 °C	Services at 85 °C
50 mA	40 mA
100 mA	80 mA
*250 mA	200 mA
*500 mA	400 mA
*1 A	800 mA
*2 A	1·6 A

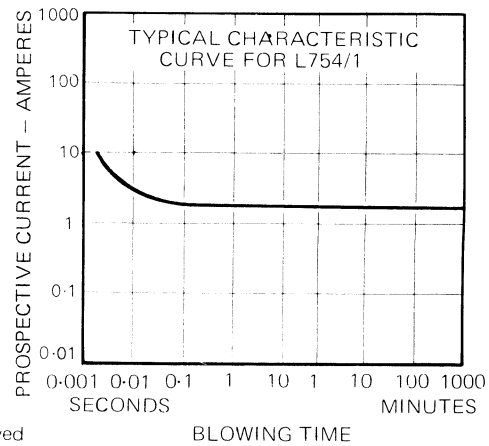

*Qualification approved

Belling-Lee

Safety Legislation/Low Voltage Directive
See introduction page to this colour section.

L1427A International, glass fuse links

Size 20 x 5 mm diameter

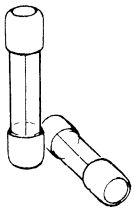

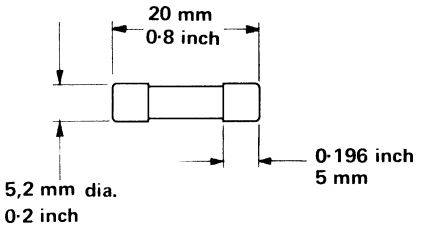

A range of quick acting, cartridge fuse links for use at a maximum ambient temperature of 35 °C, a maximum relative humidity of 75 % and a minimum air pressure of 860 mbar.

Designed to comply with BS 4265, CEE 4 and IEC 127 (ratings above 2 A are not included in BS 4265).

Breaking capacity:	35 A a.c. or 10 x In (whichever is greater).
Voltage rating:	250 Va.c.
Ambient temperature (max.):	35 °C
Marking:	Symbol F, current and voltage rating on cap, in accordance with BS 4265.
Weight:	0,79 g 0·028 oz
Belling-Lee reference number:	L1427A/current rating in amperes Example: L1427A/050 is a 50 mA fuse link.

Fuseholders which will accept this type of fuse link, are shown elsewhere in the green section.

Current ratings:

50 mA
100 mA
160 mA
250 mA
500 mA
630 mA
800 mA
1 A
1,25 A
1,6 A
2 A
2,5 A
3,15 A
4 A
5 A
6,3 A

L2080/L2081 Time lag glass fuse links

size 20 x 5 mm diameter

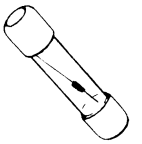

L2080

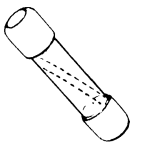

L2081

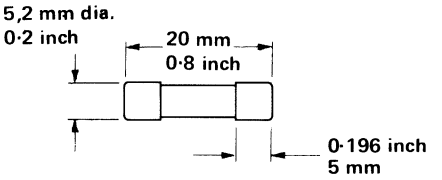

L2080
Time-Current Zone

▷ limits from standard-sheet

▨ Belling-Lee values

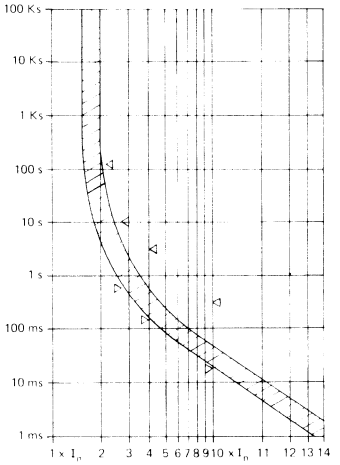

L2081
Time-Current Zone

▷ limits from standard-sheet 100 mA

● limits from standard-sheet 160, 250 mA

▨ Belling-Lee values

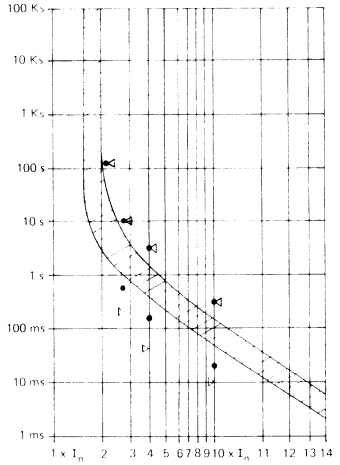

Fuseholders which will accept this type of fuse link, are shown elsewhere in the green section.

A range of light duty time lag fuse links with better than normal anti-surge properties, for the protection of telecommunications and electrical equipment where the prospective fault current of the circuit does not exceed 35 A.

The blowing characteristics (pre-arcing times) are designed to meet the requirements of IEC 127, standard sheet III.

Current ratings:	**L2080** —	500 mA 800 mA 1 A 1,6 A 2 A
	L2081 —	100 mA, 160 mA, 250 mA.
Rated voltage:		250 V a.c.
Breaking capacity:		35 A
Ambient temperature (max.):		35 °C
Weight (average):		1 g 0·035 oz
Marking:		Symbol 'T', Current and voltage ratings on cap.
Belling-Lee reference number:		List number/current rating L2081/100 is a 100 mA time-lag fuse link.

L2238 Time lag glass fuse links, size 0

1¼ inches x ¼ inch diameter 32 mm x 6,3 mm

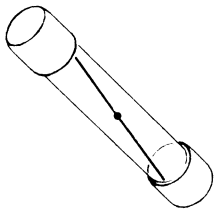

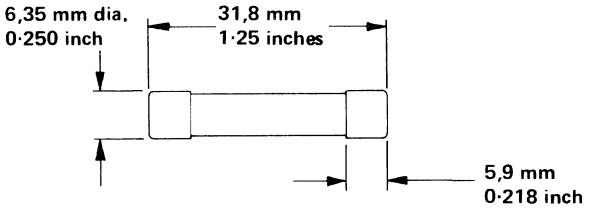

These light duty, time lag fuse links have many applications in the protection of electrical, telecommunications and entertainment equipment, where the action is slow enough to avoid blowing on harmless transient overloads. These fuse links will withstand current surges of 10 times their nominal rating lasting for up to 10 milli-seconds, which would rupture a quick acting fuse.

Current ratings:	250 mA, 500 mA, 800 mA, 1 A, 1,6 A, 2 A.
Rated voltage:	250 Va.c.
Breaking capacity:	35 A
Temperature rating:	35 °C maximum (Ambient)
Marking:	Symbol 'T', current and voltage rating on cap
Weight (average)	2,01 g 0·07 oz
Belling-Lee reference number:	List No. /Current rating L2238/250 is a 250 mA time lag fuse link.

Fuseholders which will accept this type of fuse link, are shown elsewhere in the green section.

The following ratings are also available to special order, (minimum quantity is 10,000 pieces):
315 mA 400 mA 630 mA 1,25 A 2,5 A 3,15 A 4 A 5 A 6,3 A.

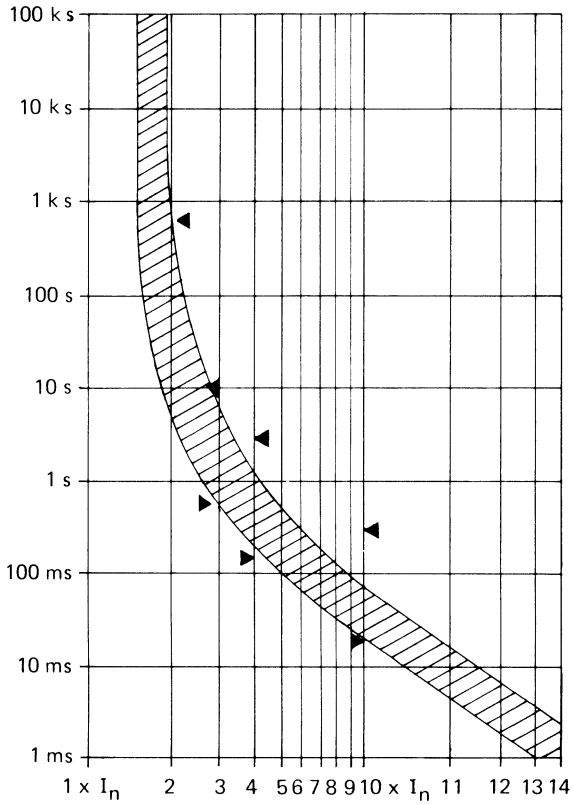

Time-current Characteristics

L1055 Standard glass fuse links, size 0

1¼ inches x ¼ inch diameter 32 mm x 6,3 mm

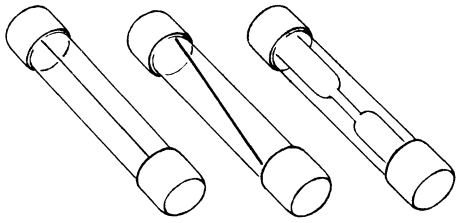

(Alternative forms of construction)

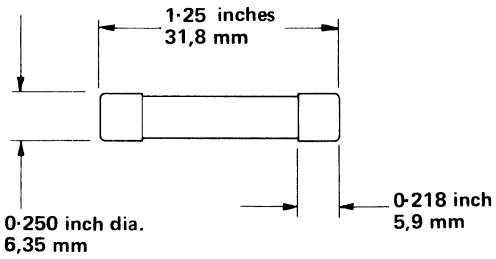

These fuse links have a minimum life of 1 000 hours continuous rated current at 25 °C and blow within 10 seconds at 2 In. De-rating factor for operation at elevated temperatures: 1·75 % per 10 °C up to 100 °C.

"For the protection of telecommunication and light electrical equipment where the prospective fault current of the circuit will not exceed 10 times the rated current of the fuse link".

Markings:	Rated value on cap.
Weight (average):	1,98 g 0·07 oz
Belling-Lee reference number:	L1055/current rating in amperes Example: L1055/·060 is a 60 mA fuse link.

Fuseholders which will accept this type of fuse link, are shown elsewhere in the green section.

Continuous rating 1 000 h	Rated voltage	Continuous rating 1 000 h	Rated voltage
60 mA	1000d.c 250a.c	3 A	60 d.c 150 a.c
100 mA	1000d.c 250a.c	5 A	60 d.c 60 a.c
150 mA	1000d.c 250a.c	7.5 A	60 d.c 60 a.c
250 mA	750d.c 250a.c	10 A	60 d.c 60 a.c
500 mA	300d.c 250a.c	12 A	32 d.c 60 a.c
750 mA	300d.c 250a.c	15 A	32 d.c 32 a.c
1 A	250d.c 250a.c	20 A	32 d.c 32 a.c
1.5 A	200d.c 250a.c	25 A	32 d.c 32 a.c
2 A	150d.c 250a.c		

Belling-Lee

Safety Legislation/Low Voltage Directive
See introduction page to this colour section.

L693 Standard, ceramic, filled fuse links, size 0

1¼ inches x ¼ inch diameter 32 mm x 6,3 mm

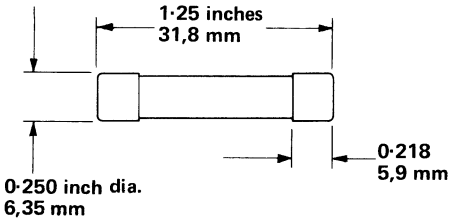

These fuse links have a category of duty 440 V AC4, 230 V DC4 (maximum prospective overload 33 000 A at 0·3 pf and 440 Va.c., or 230 Vd.c. time constant ⩾0·015).

Minimum life:
1 000 hours continuous at rated current at temperatures up to 35 °C
1 000 hours continuous at 80 % of rated current at temperatures beyond 35 °C up to 85 °C.

Temperature range: −60 °C to +85 °C (Ambient)
Approved by Joint Services, Central Electricity Board, and Lloyd's Register of Shipping.

Specification:	DEF – 63 – A
Humidity classification:	DEF – 133
Marking:	Body marked with rating and Joint Services' catalogue number.
Weight (average):	2,6 g 0·09 oz
Belling-Lee reference number:	L693/current rating in amperes Example: L693/·250 is a 250 mA fuse link.

Fuseholders which will accept this type of fuse link, are shown elsewhere in the green section.

Continuous rating 1 000 hours	
Nominal at 35 °C	Services at 85 °C
250 mA	200 mA
500 mA	400 mA
1 A	800 mA
2 A	1·6 A
3 A	2·4 A
5 A	4 A
7 A	5·6 A
10 A	8 A

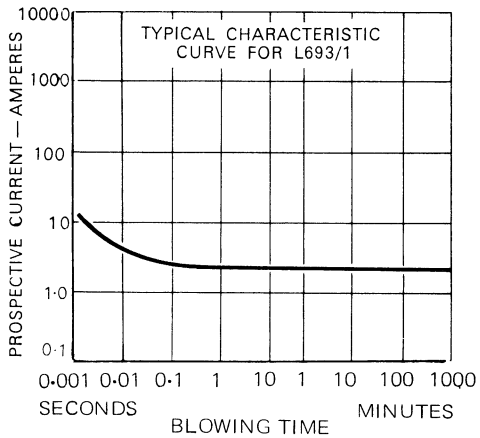

L760 Standard, ceramic, unfilled fuse links, size 0

1¼ inches x ¼ inch diameter 32 mm x 6,3 mm

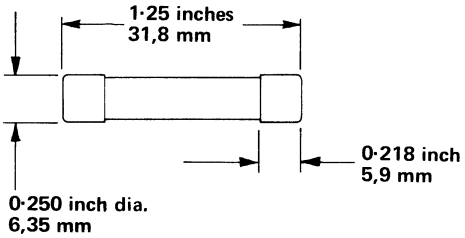

These fuse links extend the range of heavy duty links down to 60 mA. Category of duty, 250 V AC2, 230 V DC2 (maximum prospective overload 4 000 A at 0·4 pf and 250 Va.c., or 230 Vd.c., time constant ⩾0·004).

Minimum life:
1 000 hours continuous at rated current at temperatures up to 35 °C
1 000 hours continuous at 80 % of rated current at temperatures beyond 35 °C up to 85 °C.

Specification:	DEF – 63 – A
Current ratings:	60 mA, 100 mA, 150 mA
Temperature range:	−60 °C to +85 °C (Ambient)
Marking:	Body marked with rating and Joint Services' Catalogue number.
Weight (average):	2,2 g 0·08 oz
Belling-Lee reference number:	L760/current rating in amperes Example: L760/·060 is a 60 mA fuse link.

Fuseholders which will accept this type of fuse link, are shown elsewhere in the green section.

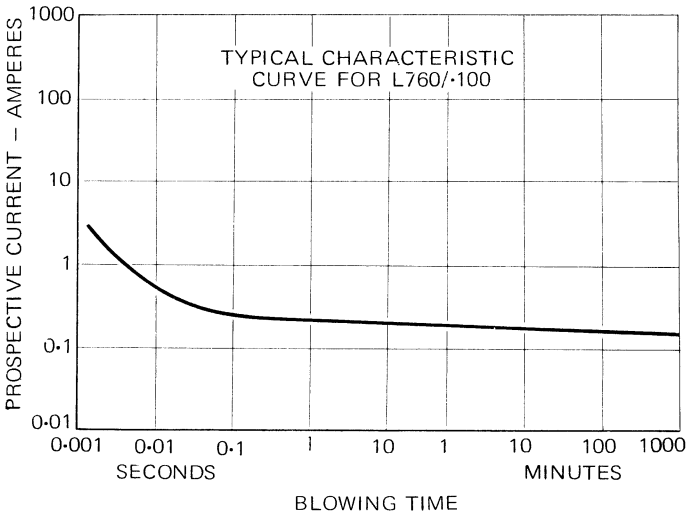

Belling-Lee

L1330A Low voltage, heavy duty fuse

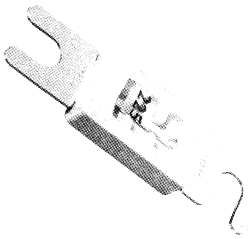

Scale 1:2

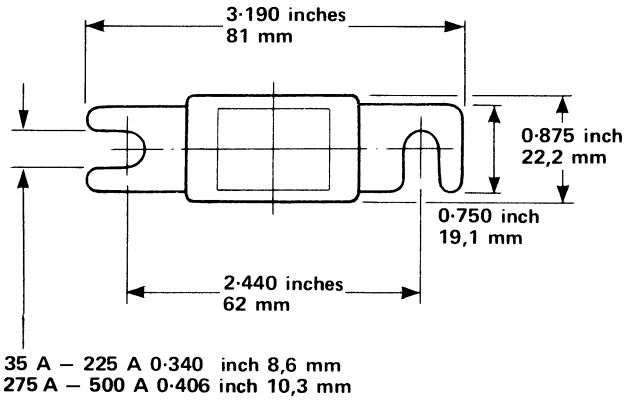

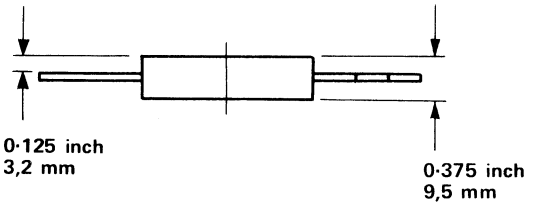

These robust, self-contained (needing no holder) fuses afford short circuit protection for the supply and overload protection for welding equipment and heavy current rectifier units, and the motors of battery driven vehicles, hoists and winches. Housed in a strong ceramic case, with a shatter-proof window for visual inspection of the fuse element; this is integral with the solid terminal lugs by which the fuse may be mounted directly in the supply line. These terminal lugs are slotted to facilitate quick release for replacement.

Nominal current ratings:	35 A, 50 A, 80 A, 100 A, 130 A, 150 A, 200 A, 225 A, 275 A, 325 A, 500 A.
Voltage rating:	48 V.
Maximum perspective overload:	3 000 A, time constant (d.c.) 0·005/0·006
Life:	The fuses have a minimum life of 1 000 hours continuous at rated current at a temperature of 25 °C or at 80 % of their nominal rated current at 70 °C, and blow within 10 seconds at three times their rated current.
Temperature range:	–65 °C to + 70 °C. (Ambient)
Weights (average):	18,7g to 29,8g according to rating.
Marking:	Current rating printed on window and stamped on lug.
Belling-Lee reference number:	L1330A/current rating. Example: L1330A/150 is a 150 A fuse.

L422/IC/L Miniature delay switch

Auto resetting

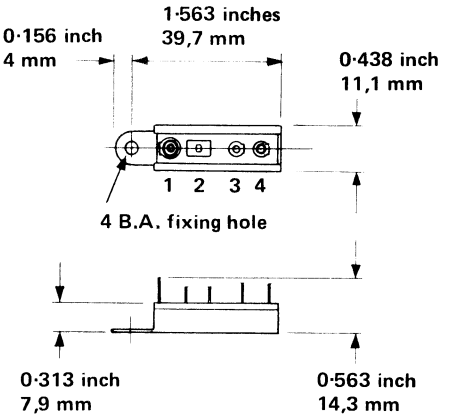

Terminals 1 & 3 contacts
Terminals 2 & 4 heater

A general purpose indirectly heated delay switch for controlling circuits of low power. The contacts are normally closed, opening within 10-45 seconds.

Switching capacity:	1 A at 25 Va.c. maximum
Endurance:	250,000 operations at 25 Va.c.
Heater rating:	1·5 watts 6 V
Weight (average):	0·37 oz 10·5 g

Note:
If the heater is connected in series with the switch contacts, the current will flow through the bi-metal element and may affect the timing.

Belling-Lee

Safety Legislation/Low Voltage Directive
See introduction page to this colour section.

Securex miniature circuit breakers and cut-outs
L5100 series, thermally operated
L5200 series, thermal-magnetic

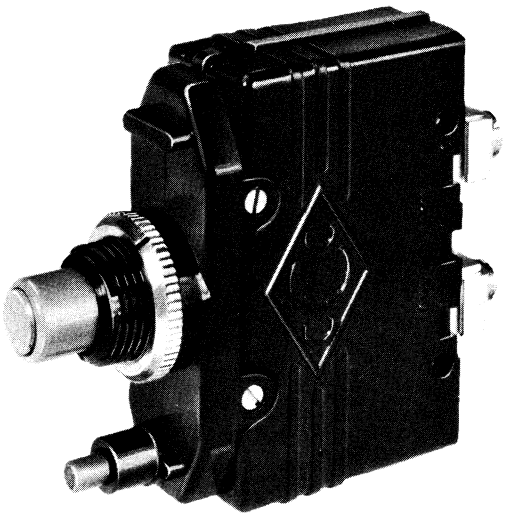

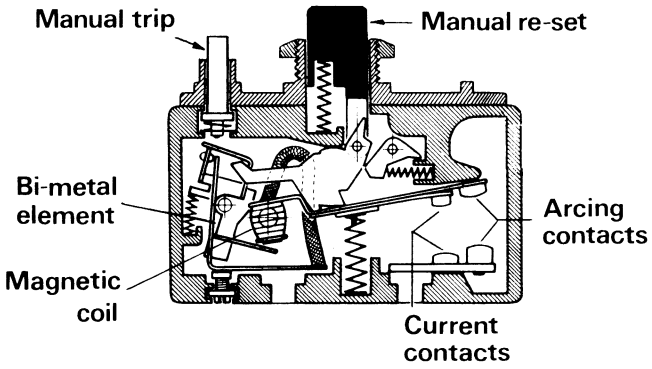

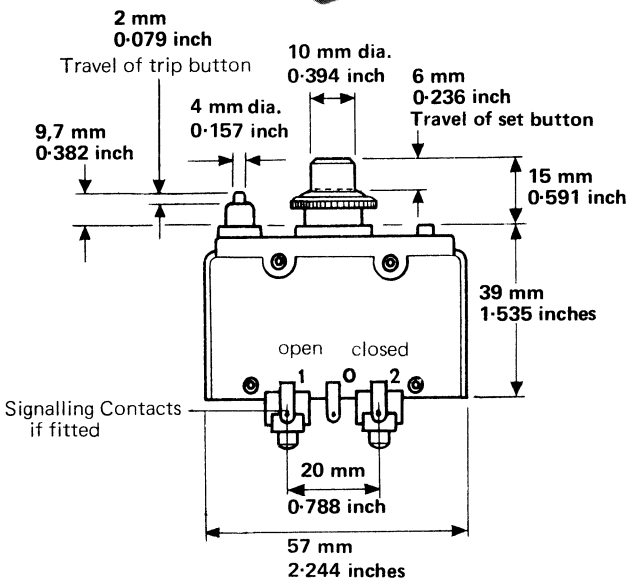

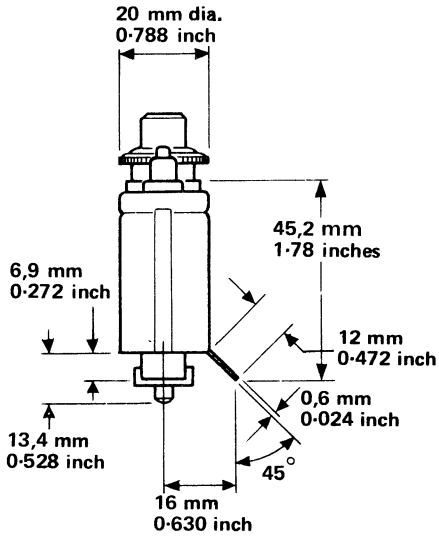

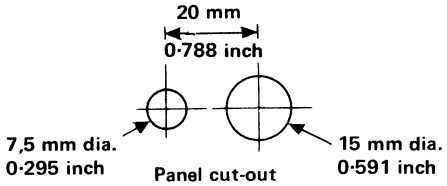

Maximum panel thickness 4 mm 0·160 inch

These robust, precision devices combine the functions of circuit protection, switching and indication in a single compact unit. They operate thermally on moderate over-current but, in the L5200 series, with large fault currents (above 6 to 10 times the rated current) a magnetic coil takes charge, tripping the mechanism virtually instantaneously, i.e., in a matter of milli-seconds.

Like a fuse, the speed of operation on overload therefore varies inversely as the magnitude of the over-current, but the circuit breaker has the advantage of being able to withstand harmless surges without tripping. Having no fusing element, embrittlement is not a hazard and the characteristics remain constant throughout the long life of the device.

A further advantage is the ability to restore a circuit rapidly after faults have been cleared. However, the action is "trip-free" which means that a circuit cannot be held closed by the "reset" button while faulty conditions exist.

Preferred current ratings (i.e. maximum load current values) extend from 300 mA to 20 A, as detailed opposite.

The maximum breaking capacity is 500 amp at 275 volts a.c. and 0·8 power factor for ratings of 5 amp and over, and 300 amp for ratings below 5 amp. Secondary contacts are fitted for breaking the arc under these conditions, so that the main circuit contacts are not eroded. With L5100 series, in circuits where large, continuous fault currents ($>$ 10 In) can occur, the very sensitive ratings below 2 A should be protected by means of an appropriate external fuse.

Alternative facilities
The "trip" button can be omitted, so that the device becomes a protective cut-out. The "reset" button has a length of travel of nearly ¼ inch so that it projects well beyond the central boss when the mechanism has tripped, providing a clear indication of the circuit condition. However, an additional set of change-over contacts can be included for remote signalling if required.

Mounting
The recommended standard types are panel mounted by means of a central threaded boss. However, they can be converted for plug-in mounting in switch boxes, by using 4 mm plug pins in place of the two terminal screws.

Selection of ratings
As with most thermally operated devices, unless specially compensated, ambient temperature variations will affect the performance and, when selecting a rating, it is prudent to allow for this in order to avoid false operation.

The specified rating of these miniature circuit breakers is determined at a nominal ambient temperature of 20 °C. At lower temperatures the rating may be increased and vice versa, and the normal value should be multiplied by a correction factor which may be obtained from the graph opposite.

Example: L5201/5

The rating at 20 °C is 5 A
At 0 °C the correction factor is 1·05
the rating is 1·05 x 5 = 5·25 A

At 40 °C the correction factor is 0·92
the rating is 0·92 x 5 = 4·6 A

Preferred current ratings (In): 0,3 0,5 0,7 1 2 3 5 8 10 and 15 A
The circuit breakers will hold in indefinitely on all currents up to 1 · 1 times the rated value

Breaking capacity (maximum): 300 A for ratings up to 3 A; 500 A for ratings of 5 A and over } at 0·8 power factor

Tripping times: At 1·5 x In < 5 min *At 10 x Ina.c. < 10 ms
At 2 x In < 60 s *At 15 x Ind.c. < 10 ms
At 5·5 x In < 7 s *Magnetic

Breakdown voltage (d.c.): > 4 kV between terminals
> 6 kV between linked terminals and metal panel

Working voltage (max.): 275 Va.c. (r.m.s.)
60 Vd.c.

Insulation resistance: > 10^3 megohms

Insertion resistance (typical):

Rating	Nominal	Tol.
0,3 A	9·2 ohm	± 16 %
0,5 A	3·3 ohm	± 16 %
0,7 A	1·8 ohm	± 16 %
1 A	0·9 ohm	± 16 %
2 A	0·12 ohm	± 16 %
3 A	80 milliohm	± 16 %
5 A	50 milliohm	± 16 %
8 A	26 milliohm	± 16 %
10 A	18·5 milliohm	± 25 %
15 A	10 milliohm	± 30 %

Temperature range: – 55 °C to + 70 °C (Ambient)

Humidity: H5 (DEF – 5011)

Altitude: D1 satisfactory to 9 000 m 30 000 ft (DEF – 5011)

Acceleration: A1 satisfactory to over 35 g (DEF – 5011)

Signalling contacts (if fitted): Single pole change-over
Maximum rating 1 A at 250 V a.c. or 50 Vd.c. substantially non-inductive

Maximum wire size: 7/0,85 mm 7/0·029 inch

Maximum panel thickness: 4 mm 0·160 inch 8 s.w.g.

Weight (average): According to type, 1·9 oz 54 g minimum
2·3 oz 65 g maximum

It may be possible to cater for ratings not shown above with minimum quantities of each type.

The ratings in question: 0,1 0,2 0,4 1,5 2,5 3,5 4,6 12 and 20 amp.

Belling-Lee reference numbers

Types available:

List number		Description
Thermal	**Thermal-mag.**	
L5100/In	L5200/In	Cut-out (i.e. no trip button)
L5101/In	L5201/In	Circuit breaker (i.e. with trip button)
L5110/In	L5210/In	Cut-out with signalling contacts
L5111/In	L5211/In	Circuit breaker with signalling contacts

Example: L5211/5 is a circuit breaker for controlling a circuit in which the normal current is up to 5 A at 20 °C; fitted with signalling contacts.

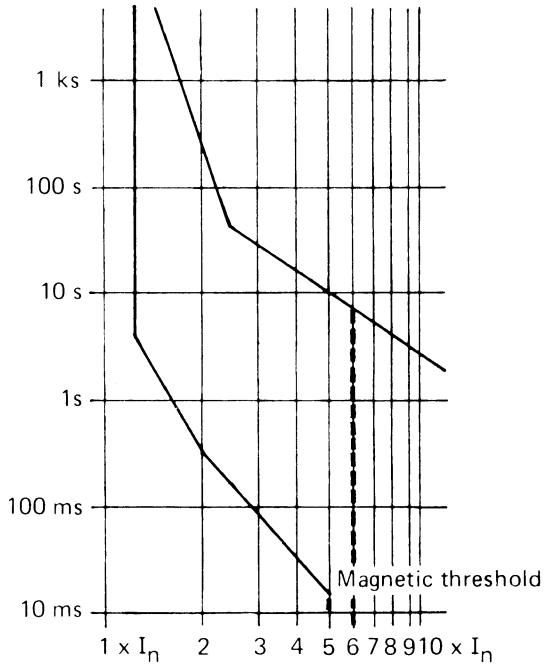

Ambient Temperature 20 °C

Time–Current Characteristics

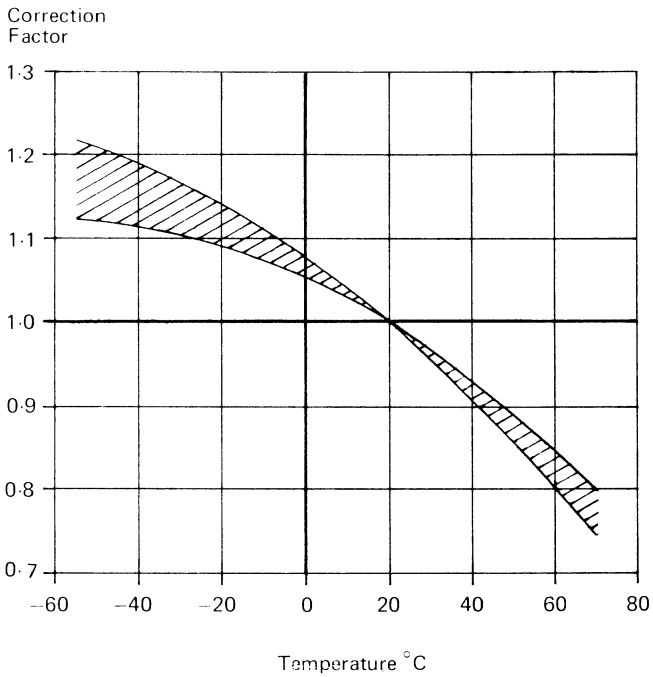

Limits of the Influence of Temperature