CHANGES
1x20409:12·1·53.
2x22167:18·4·55
3x23543:12·2·57
4x25918: 8·2·61.

STOCK LIST

DESCRIPTION	F Nº	S Nº
BASIC 5H RELAY	150	45647
COIL, C.P ④	150	56204

INSULATION

500 V. D.C. 100 MΩ MIN BETWEEN WDGS.; BETWEEN WDGS. & FRAME; & BETWEEN CONTACTS & FRAME

TYPE OF ADJUSTMENT

③ EACH SIDE STABLE

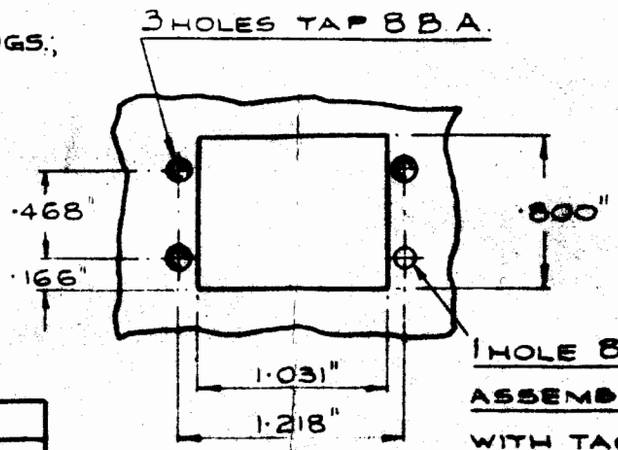

1 HOLE 8 B.A. CLEAR ASSEMBLE SOCKET WITH TAG 12 ADJACENT TO THIS HOLE

INITIAL SYMMETRICAL ADJUSTMENT			
TEST BETWEEN TAGS	1 & 4		
A.C OPERATE	4·2mA		
D.C. & A.C SATURATE	42mA		
MIN A.C. OPERATE	2·9mA		

OVERALL SIZE OF RELAY ABOVE MOUNTING PLATE:-

HEIGHT - 2¾"

WIDTH - 1 11/16"

BREADTH:- 13/16"

DIFFERENTIAL TEST			
BETWEEN TAGS	1-4 & 3-2		
A.C. CURRENT	210mA		

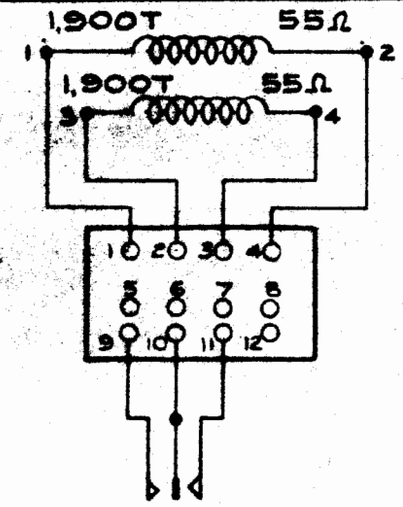

WITH + ON TAG 1 OR 2
10 MAKES CONTACT WITH 11

FINAL TESTS -

RELAY TO BE ADJUSTED TO THE FOLLOWING D.C. FIGS - 1900T

	RE-ADJUST	TEST	
SATURATE -	42 mA	42 mA	IN BOTH DIRECTIONS
NON-OPERATE -	3·8mA	3·0mA	
OPERATE -	4·2mA	5·0mA	

CONTACT 'LIFT-OFF' PRESSURE (MIN.):-
MEASURED AT CONTACTS WITH NO CURRENT IN WDGS

RE-ADJUST = 20 gms
TEST = 15 gms
② ACCEPTANCE TEST = 14 gms.

CONTACT GAP.
TO BE BETWEEN ·0025" & ·0045"

MIN. CIRCUIT CURRENT:- 5·8mA. IN ONE 1,900T. WDG.
①

③ MAINTENANCE HANDBOOK F.3511.
T.M.C. SPEC. T.235. ①

TEST SHEET
CARPENTER RELAY TYPE 5H7

DRN.	TR. M.M.
CHKD.	F.C.B.
APPD.	14/10/51

S.58314.

TELEPHONE MFG. CO. LTD., WEST DULWICH, LONDON S.E.21

SCALE:- APPROX.

X2/2